PCTEST ENGINEERING LABORATORY, INC.
6660-B Dobbin Road, Columbia, MD 21045 USA
Tel. +1.410.290.6652 / Fax +1.410.290.6654
http://www.pctestlab.com

SAR COMPLIANCE EVALUATION REPORT

Applicant Name:
Samsung Electronics, Co. Ltd.
18600 Broadwick St.
Rancho Dominguez, CA 90220
United States

Date of Testing:
08/04/11 - 08/11/11
Test Site/Location:
PCTEST Lab, Columbia, MD, USA
Test Report Serial No.:
0Y1108081357.A3L

FCC ID: A3LSGHI937

APPLICANT: SAMSUNG ELECTRONICS, CO. LTD.

EUT Type: 850/1900 GSM/GPRS/EDGE/WCDMA/HSPA Phone with Bluetooth and WLAN
Application Type: Certification
FCC Rule Part(s): CFR §2.1093; FCC/OET Bulletin 65 Supplement C [June 2001]
Model(s): SGH-I937
Test Device Serial No.: Pre-Production [S/N: FI-195-A, FI-195-B, FI-195-C]

Band & Mode	Tx Frequency	Conducted Power [dBm]	SAR		
			1 gm Head (W/kg)	1 gm Body-Worn (W/kg)	1 gm Hotspot (W/kg)
GSM 850	824.20 - 848.80 MHz	32.42	0.28	0.45	1.12
GSM 1900	1850.20 - 1909.80 MHz	30.04	0.33	0.27	0.62
WCDMA 850	826.40 - 846.60 MHz	23.21	0.31	0.55	0.55
WCDMA 1900	1852.4 - 1907.6 MHz	23.37	0.33	0.71	0.71
2.4 GHz WLAN	2412 - 2462 MHz	16.71	0.03	0.04	0.04
5.2 GHz WLAN	5180 - 5240 MHz	13.46	0.02	0.08	
5.3 GHz WLAN	5260 - 5320 MHz	13.29	0.01	0.08	
5.5 GHz WLAN	5500 - 5700 MHz	13.19	0.02	0.12	
5.8 GHz WLAN	5745 - 5825 MHz	13.47	0.00	0.04	

All samples are confirmed to be identical per the manufacturer.

This wireless portable device has been shown to be capable of compliance for localized specific absorption rate (SAR) for uncontrolled environment/general population exposure limits specified in ANSI/IEEE C95.1-1992 and has been tested in accordance with the measurement procedures specified in FCC/OET Bulletin 65 Supplement C (2001), IEEE 1528-2003 and in applicable Industry Canada Radio Standards Specifications (RSS); for North American frequency bands only.

I attest to the accuracy of data. All measurements reported herein were performed by me or were made under my supervision and are correct to the best of my knowledge and belief. I assume full responsibility for the completeness of these measurements and vouch for the qualifications of all persons taking them. Test results reported herein relate only to the item(s) tested.

PCTEST certifies that no party to this application has been subject to a denial of Federal benefits that includes FCC benefits pursuant to Section 5301 of the Anti-Drug Abuse Act of 1988, 21 U.S.C. 862.

Randy Ortanez
President

ACCREDITED
TESTING LABORATORY
CERTIFICATE #2041.01

© 2011 PCTEST Engineering Laboratory, Inc.

TABLE OF CONTENTS

1 INTRODUCTION 3

2 TEST SITE LOCATION 4

3 SAR MEASUREMENT SETUP 5

4 DASY E-FIELD PROBE SYSTEM 7

5 PROBE CALIBRATION PROCESS 8

6 PHANTOM AND EQUIVALENT TISSUES 9

7 DOSIMETRIC ASSESSMENT & PHANTOM SPECS 10

8 DEFINITION OF REFERENCE POINTS 11

9 TEST CONFIGURATION POSITIONS 12

10 FCC RF EXPOSURE LIMITS 15

11 FCC 3G MEASUREMENT PROCEDURES 16

12 SAR TESTING WITH IEEE 802.11 TRANSMITTERS 20

13 FCC PERSONAL WIRELESS ROUTER CONFIGURATIONS 23

14 SYSTEM VERIFICATION 25

15 SAR DATA SUMMARY 28

16 FCC MULTI-TX AND ANTENNA SAR CONSIDERATIONS 43

17 EQUIPMENT LIST 46

18 MEASUREMENT UNCERTAINTIES 47

19 CONCLUSION 49

20 REFERENCES 50

© 2011 PCTEST Engineering Laboratory, Inc.

1 INTRODUCTION

The FCC has adopted the guidelines for evaluating the environmental effects of radio frequency (RF) radiation in ET Docket 93-62 on Aug. 6, 1996 to protect the public and workers from the potential hazards of RF emissions due to FCC-regulated portable devices. [1]

The safety limits used for the environmental evaluation measurements are based on the criteria published by the American National Standards Institute (ANSI) for localized specific absorption rate (SAR) in IEEE/ANSI C95.1-1992 Standard for Safety Levels with Respect to Human Exposure to Radio Frequency Electromagnetic Fields, 3 kHz to 300 GHz [3] and Health Canada RF Exposure Guidelines Safety Code 6 [24]. The measurement procedure described in IEEE/ANSI C95.3-2002 Recommended Practice for the Measurement of Potentially Hazardous Electromagnetic Fields - RF and Microwave [4] is used for guidance in measuring the Specific Absorption Rate (SAR) due to the RF radiation exposure from the Equipment Under Test (EUT). These criteria for SAR evaluation are similar to those recommended by the International Committee for Non-Ionizing Radiation Protection (ICNIRP) in Biological Effects and Exposure Criteria for Radiofrequency Electromagnetic Fields," Report No. Vol 74. SAR is a measure of the rate of energy absorption due to exposure to an RF transmitting source. SAR values have been related to threshold levels for potential biological hazards.

1.1 SAR Definition

Specific Absorption Rate is defined as the time derivative (rate) of the incremental energy (dU) absorbed by (dissipated in) an incremental mass (dm) contained in a volume element (dV) of a given density (ρ). It is also defined as the rate of RF energy absorption per unit mass at a point in an absorbing body (see Fig. 1-1).

$$SAR = \frac{d}{dt}\left(\frac{dU}{dm}\right) = \frac{d}{dt}\left(\frac{dU}{\rho\, dv}\right)$$

Figure 1-1
SAR Mathematical Equation

SAR is expressed in units of Watts per Kilogram (W/kg).

$$SAR = \frac{\sigma \cdot E^2}{\rho}$$

where:

σ = conductivity of the tissue-simulating material (S/m)
ρ = mass density of the tissue-simulating material (kg/m^3)
E = Total RMS electric field strength (V/m)

NOTE: The primary factors that control rate of energy absorption were found to be the wavelength of the incident field in relation to the dimensions and geometry of the irradiated organism, the orientation of the organism in relation to the polarity of field vectors, the presence of reflecting surfaces, and whether conductive contact is made by the organism with a ground plane.[6]

© 2011 PCTEST Engineering Laboratory, Inc.

2 TEST SITE LOCATION

2.1 INTRODUCTION

The map at the right shows the location of the PCTEST LABORATORY in Columbia, Maryland. It is in proximity to the FCC Laboratory, the Baltimore-Washington International (BWI) airport, the city of Baltimore and Washington, DC.

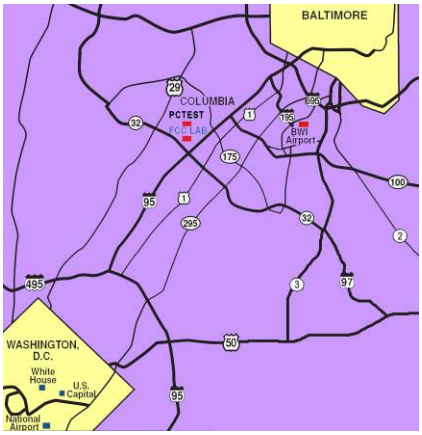

Figure 2-1
Map of the Greater Baltimore and Metropolitan Washington, D.C. area

These measurement tests were conducted at the PCTEST Engineering Laboratory, Inc. facility in New Concept Business Park, Guilford Industrial Park, Columbia, Maryland. The site address is 6660-B Dobbin Road, Columbia, MD 21045. The test site is one of the highest points in the Columbia area with an elevation of 390 feet above mean sea level. The site coordinates are 39° 11'15" N latitude and 76° 49' 38" W longitude. The facility is 1.5 miles north of the FCC laboratory, and the ambient signal and ambient signal strength are approximately equal to those of the FCC laboratory. There are no FM or TV transmitters within 15 miles of the site. The detailed description of the measurement facility was found to be in compliance with the requirements of § 2.948 according to ANSI C63.4 on January 27, 2006 and Industry Canada.

2.2 Test Facility / Accreditations:

Measurements were performed at an independent accredited PCTEST Engineering Lab located in Columbia, MD 21045, U.S.A.

- PCTEST Lab is accredited to ISO 17025-2005 by the American Association for Laboratory Accreditation (A2LA) in Specific Absorption Rate (SAR) testing, Hearing-Aid Compatibility (HAC), Battery Safety, CTIA Test Plans, and wireless testing for FCC and Industry Canada Rules.
- PCTEST Lab is accredited to ISO 17025 by U.S. National Institute of Standards and Technology (NIST) under the National Voluntary Laboratory Accreditation Program (NVLAP Lab code: 100431-0) in EMC, FCC and Telecommunications.
- PCTEST facility is an FCC registered (PCTEST Reg. No. 90864) test facility with the site description report on file and has met all the requirements specified in Section 2.948 of the FCC Rules and Industry Canada (IC-2451).
- PCTEST Lab is a recognized U.S. Conformity Assessment Body (CAB) in EMC and R&TTE (n.b. 0982) under the U.S.-EU Mutual Recognition Agreement (MRA).
- PCTEST TCB is a Telecommunication Certification Body (TCB) accredited to ISO/IEC Guide 65 by the American National Standards Institute (ANSI) in all scopes of FCC Rules and all Industry Canada Standards (RSS).

- PCTEST facility is an IC registered (IC-2451) test laboratory with the site description on file at Industry Canada.
- PCTEST is a CTIA Authorized Test Laboratory (CATL) for AMPS and CDMA, and EvDO mobile phones.
- PCTEST is a CTIA Authorized Test Laboratory (CATL) for Over-the-Air (OTA) Antenna Performance testing for AMPS, CDMA, GSM, GPRS, EGPRS, UMTS (W-CDMA), CDMA 1xEVDO Data, CDMA 1xRTT Data

© 2011 PCTEST Engineering Laboratory, Inc.

3 SAR MEASUREMENT SETUP

3.1 Robotic System

Measurements are performed using the DASY4 automated dosimetric assessment system. The DASY4 is made by Schmid & Partner Engineering AG (SPEAG) in Zurich, Switzerland and consists of a high precision robotics system (Staubli), robot controller, desktop computer, near-field probe, probe alignment sensor, and the SAM phantom containing the head or body equivalent material. The robot is a six-axis industrial robot, performing precise movements to position the probe to the location (points) of maximum electromagnetic field (EMF) (see Figure 3-1).

3.2 System Hardware

A cell controller system contains the power supply, robot controller, teach pendant (Joystick), and a remote control used to drive the robot motors. The PC consists of the SAR Measurement Software DASY4, A/D interface card, monitor, mouse, and keyboard. The Staubli Robot is connected to the cell controller to allow software manipulation of the robot. A data acquisition electronic (DAE) circuit that performs the signal amplification, signal multiplexing, A/D conversion, offset measurements, mechanical surface detection, collision detection, etc. is connected to the Electro-optical coupler (EOC). The EOC performs the conversion from the optical into digital electric signal from the DAE and transfers data to the PC card.

3.3 System Electronics

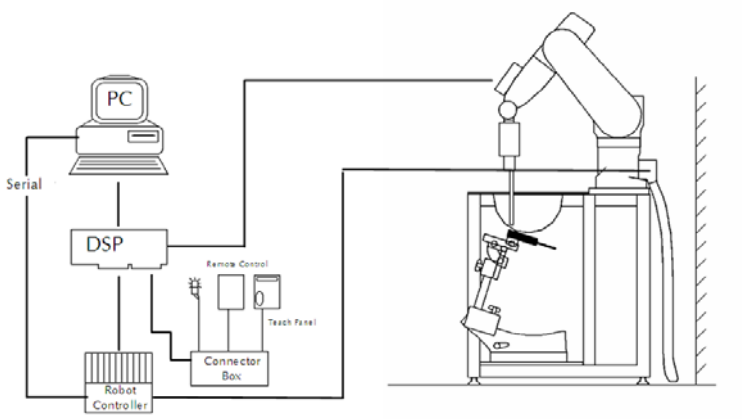

Figure 3-1
SAR Measurement System Setup

The DAE consists of a highly sensitive electrometer-grade auto-zeroing preamplifier, a channel and gain-switching multiplexer, a fast 16 bit AD-converter and a command decoder and control logic unit. Transmission to the PC-card is accomplished through an optical downlink for data and status information and an optical uplink for commands and clock lines. The mechanical probe mounting device includes two different sensor systems for frontal and sidewise probe contacts. They are also used for mechanical surface detection and probe collision detection. The robot uses its own controller with a built in VME-bus computer.

© 2011 PCTEST Engineering Laboratory, Inc.

3.4 Automated Test System Specifications

Test Software:	SPEAG DASY4 version 4.7 Measurement Software
Robot:	Stäubli Unimation Corp. Robot RX60L
Repeatability:	0.02 mm
No. of Axes:	6

Data Acquisition Electronic System (DAE)

Data Converter

Features:	Signal Amplifier, multiplexer, A/D converter & control logic
Software:	SEMCAD software
Connecting Lines:	Optical Downlink for data and status info Optical upload for commands and clock

PC Interface Card

Function:	Link to DAE 16-bit A/D converter for surface detection system Two Serial & Ethernet link to robotics Direct emergency stop output for robot

Phantom

Type:	SAM Twin Phantom (V4.0)
Shell Material:	Composite
Thickness:	2.0 ± 0.2 mm

Figure 3-2
SAR Measurement System

© 2011 PCTEST Engineering Laboratory, Inc.

4 DASY E-FIELD PROBE SYSTEM

4.1 Probe Measurement System

Figure 4-1
SAR System

The SAR measurements were conducted with the dosimetric probe designed in the classical triangular configuration (see Figure 4-3) and optimized for dosimetric evaluation [9]. The probe is constructed using the thick film technique; with printed resistive lines on ceramic substrates. The probe is equipped with an optical multi-fiber line ending at the front of the probe tip. It is connected to the EOC box on the robot arm and provides an automatic detection of the phantom surface. Half of the fibers are connected to a pulsed infrared transmitter, the other half to a synchronized receiver. As the probe approaches the surface, the reflection from the surface produces a coupling from the transmitting to the receiving fibers. This reflection increases first during the approach, reaches maximum and then decreases. If the probe is flatly touching the surface, the coupling is zero. The distance of the coupling maximum to the surface is independent of the surface reflectivity and largely independent of the surface to probe angle. The DASY4 software reads the reflection during a software approach and looks for the maximum using a 2nd order curve fitting (see Figure 5-1). The approach is stopped at reaching the maximum.

4.2 Probe Specifications

Model(s):	ES3DV2, ES3DV3, EX3DV4
Frequency Range:	10 MHz – 6.0 GHz (EX3DV4) 10 MHz – 4 GHz (ES3DV3)
Calibration:	In head and body simulating tissue at Frequencies from 300 up to 6000MHz
Linearity:	± 0.2 dB (30 MHz to 6 GHz) for EX3DV4 ± 0.2 dB (30 MHz to 4 GHz) for ES3DV3
Dynamic Range:	10 mW/kg – 100 W/kg
Probe Length:	330 mm
Probe Tip Length:	20 mm
Body Diameter:	12 mm
Tip Diameter:	2.5 mm (3.9mm for ES3DV3)
Tip-Center:	1 mm (2.0 mm for ES3DV3)
Application:	SAR Dosimetry Testing Compliance tests of mobile phones Dosimetry in strong gradient fields

Figure 4-2
Near-Field Probe

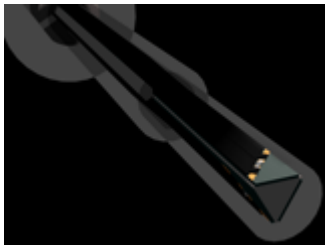

Figure 4-3
Triangular Probe Configuration

© 2011 PCTEST Engineering Laboratory, Inc.

5 PROBE CALIBRATION PROCESS

5.1 Dosimetric Assessment Procedure

Each E-Probe/Probe Amplifier combination has unique calibration parameters. A TEM cell calibration procedure is conducted to determine the proper amplifier settings to enter in the probe parameters. The amplifier settings are determined for a given frequency by subjecting the probe to a known E-field density (1 mW/cm^2) using an RF Signal generator, TEM cell, and RF Power Meter.

5.2 Free Space Assessment

The free space E-field from amplified probe outputs is determined in a test chamber. This calibration can be performed in a TEM cell if the frequency is below 1 GHz and in a waveguide or other methodologies above 1 GHz for free space. For the free space calibration, the probe is placed in the volumetric center of the cavity and at the proper orientation with the field. The probe is rotated 360 degrees until the three channels show the maximum reading. The power density readings equates to 1 mW/cm^2.

5.3 Temperature Assessment

E-field temperature correlation calibration is performed in a flat phantom filled with the appropriate simulated head tissue. The E-field in the medium correlates with the temperature rise in the dielectric medium. For temperature correlation calibration a RF transparent thermistor-based temperature probe is used in conjunction with the E-field probe.

$$SAR = C\frac{\Delta T}{\Delta t}$$

where:

Δt = exposure time (30 seconds),
C = heat capacity of tissue (brain or muscle),
ΔT = temperature increase due to RF exposure.

$$SAR = \frac{|E|^2 \cdot \sigma}{\rho}$$

where:

σ = simulated tissue conductivity,
ρ = Tissue density (1.25 g/cm^3 for brain tissue)

SAR is proportional to $\Delta T/\Delta t$, the initial rate of tissue heating, before thermal diffusion takes place. The electric field in the simulated tissue can be used to estimate SAR by equating the thermally derived SAR to that with the E- field component.

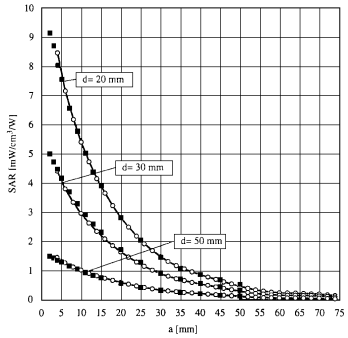

Figure 5-1 E-Field and Temperature measurements at 900MHz [9]

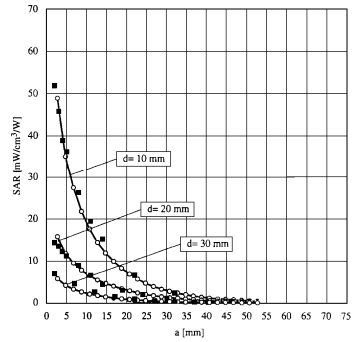

Figure 5-2 E-Field and temperature measurements at 1.9GHz [9]

© 2011 PCTEST Engineering Laboratory, Inc.

6 PHANTOM AND EQUIVALENT TISSUES

6.1 SAM Phantoms

Figure 6-1
SAM Phantoms

The SAM Twin Phantom V4.0 is constructed of a fiberglass shell integrated in a table. The shape of the shell is based on data from an anatomical study designed to represent the 90th percentile of the population [12][13]. The phantom enables the dosimetric evaluation of SAR for both left and right handed handset usage, as well as body-worn usage using the flat phantom region. Reference markings on the Phantom allow the complete setup of all predefined phantom positions and measurement grids by manually teaching three points in the robot. The shell phantom has a 2mm shell thickness (except the ear region where shell thickness increases to 6 mm).

6.2 Tissue Simulating Mixture Characterization

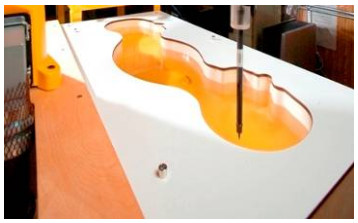

Figure 6-2
SAM Phantom with Simulating Tissue

The mixture is characterized to obtain proper dielectric constant (permittivity) and conductivity of the tissue of interest. The tissue dielectric parameters recommended in IEEE 1528 and IEC 62209 have been used as targets for the compositions, and are to match within 5%, per the FCC recommendations.

Table 6-1
Composition of the Tissue Equivalent Matter

Frequency (MHz)	835	835	1900	1900	2450	2450	5200-5800	5200-5800
Tissue	Head	Body	Head	Body	Head	Body	Head	Body
Ingredients (% by weight)								
Bactericide	0.1	0.1						
DGBE			44.92	29.44	7.99	26.7		
HEC	1	1						
NaCl	1.45	0.94	0.18	0.39	0.16	0.1		
Sucrose	57	44.9						
Triton X-100					19.97		17.24	10.67
Diethylenglycol monohexylether							17.24	10.67
Water	40.45	53.06	54.9	70.17	71.88	73.2	65.52	78.66

© 2011 PCTEST Engineering Laboratory, Inc.

7 DOSIMETRIC ASSESSMENT & PHANTOM SPECS

7.1 Measurement Procedure

The evaluation was performed using the following procedure:

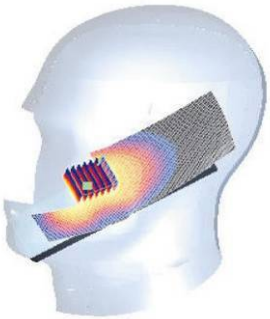

Figure 7-1
Sample SAR Area Scan

1. The SAR distribution at the exposed side of the head was measured at a distance no greater than 5.0 mm from the inner surface of the shell. The area covered the entire dimension of the head and the horizontal grid spacing was 15mm x 15mm.
2. The point SAR measurement was taken at the maximum SAR region determined from Step 1 to enable the monitoring of SAR fluctuations/drifts during testing the 1 gram cube. This fixed point was measured and used as a reference value.
3. Based on the area scan data, the area of the maximum absorption was determined by spline interpolation. Around this point, a volume of 32mm x 32mm x 30mm (fine resolution volume scan, zoom scan) was assessed by measuring 5 x 5 x 7 points. On this basis of this data set, the spatial peak SAR value was evaluated with the following procedure (see references or the DASY manual for more details):
   a. The data was extrapolated to the surface of the outer-shell of the phantom. The combined distance extrapolated was the combined distance from the center of the dipoles 2.7mm away from the tip of the probe housing plus the 1.2 mm distance between the surface and the lowest measuring point. The extrapolation was based on a least-squares algorithm. A polynomial of the fourth order was calculated through the points in the z-axis (normal to the phantom shell).
   b. After the maximum interpolated values were calculated between the points in the cube, the SAR was averaged over the spatial volume (1g or 10g) using a 3D-Spline interpolation algorithm. The 3D-spline is composed of three one-dimensional splines with the “Not a knot” condition (in x, y, and z directions). The volume was then integrated with the trapezoidal algorithm. One thousand points (10 x 10 x 10) were obtained through interpolation, in order to calculate the averaged SAR.
   c. All neighboring volumes were evaluated until no neighboring volume with a higher average value was found.
4. The SAR reference value, at the same location as step 2, was re-measured after the zoom scan was complete. If the value deviated by more than 5%, the evaluation was repeated.
5. For 5 GHz testing finer resolution zoom scans were preformed as specified by FCC SAR Measurement Requirements for 3 – 6 GHz, KDB pub 865664. The 5 GHz zoom scan requires a minimum volume of 24mm x 24mm x 20mm and 7 x 7 x 11 points.

7.2 Specific Anthropomorphic Mannequin (SAM) Specifications

The phantom for handset SAR assessment testing is a low-loss dielectric shell, with shape and dimensions derived from the anthropometric data of the 90th percentile adult male head dimensions as tabulated by the US Army. The SAM Twin Phantom shell is bisected along the mid-sagittal plane into right and left halves (see Figure 7-2). The perimeter sidewalls of each phantom halves are extended to allow filling with liquid to a depth that is sufficient to minimize reflections from the upper surface. The liquid depth is maintained at a minimum depth of 15 cm.

Figure 7-2
SAM Twin Phantom Shell

© 2011 PCTEST Engineering Laboratory, Inc.

8 DEFINITION OF REFERENCE POINTS

8.1 EAR REFERENCE POINT

Figure 8-1 shows the front, back and side views of the SAM Twin Phantom. The point "M" is the reference point for the center of the mouth, "LE" is the left ear reference point (ERP), and "RE" is the right ERP. The ERP is 15mm posterior to the entrance to the ear canal (EEC) along the B-M line (Back-Mouth), as shown in Figure 8-1. The plane passing through the two ear canals and M is defined as the Reference Plane. The line N-F (Neck-Front) is perpendicular to the reference plane and passing through the RE (or LE) is called the Reference Pivoting Line (see Figure 8-2). Line B-M is perpendicular to the N-F line. Both N-F and B-M lines are marked on the external phantom shell to facilitate handset positioning [5].

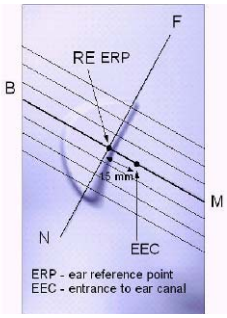

Figure 8-1
Close-Up Side view of ERP

8.2 HANDSET REFERENCE POINTS

Two imaginary lines on the handset were established: the vertical centerline and the horizontal line. The test device was placed in a normal operating position with the "test device reference point" located along the "vertical centerline" on the front of the device aligned to the "ear reference point" (See Figure 8-3). The "test device reference point" was than located at the same level as the center of the ear reference point. The test device was positioned so that the "vertical centerline" was bisecting the front surface of the handset at it's top and bottom edges, positioning the "ear reference point" on the outer surface of the both the left and right head phantoms on the ear reference point.

Figure 8-2
Front, back and side view of SAM Twin Phantom

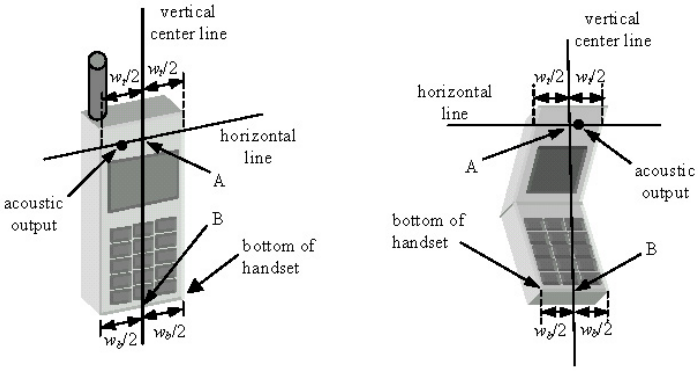

Figure 8-3
Handset Vertical Center & Horizontal Line Reference Points

© 2011 PCTEST Engineering Laboratory, Inc.

9 TEST CONFIGURATION POSITIONS

9.1 Device Holder

The DASY device holder has been made out of low-loss POM material having the following dielectric parameters: relative permittivity ε = 3 and loss tangent δ = 0.02.

9.2 Positioning for Cheek/Touch

1. The test device was positioned with the handset close to the surface of the phantom such that point A is on the (virtual) extension of the line passing through points RE and LE on the phantom (see Figure 9-1), such that the plane defined by the vertical center line and the horizontal line of the phone is approximately parallel to the sagittal plane of the phantom.

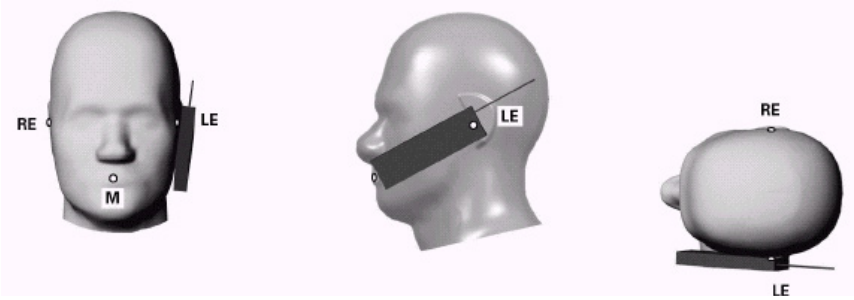

Figure 9-1 Front, Side and Top View of Cheek/Touch Position

2. The handset was translated towards the phantom along the line passing through RE & LE until the handset touches the ear.
3. While maintaining the handset in this plane, the handset was rotated around the LE-RE line until the vertical centerline was in the plane normal to MB-NF including the line MB (reference plane).
4. The phone was hen rotated around the vertical centerline until the phone (horizontal line) was symmetrical was respect to the line NF.
5. While maintaining the vertical centerline in the reference plane, keeping point A on the line passing through RE and LE, and maintaining the phone contact with the ear, the handset was rotated about the line NF until any point on the handset made contact with a phantom point below the ear (cheek) (See Figure 9-2).

9.3 Positioning for Ear / 15º Tilt

With the test device aligned in the “Cheek/Touch Position”:

1. While maintaining the orientation of the phone, the phone was retracted parallel to the reference plane far enough to enable a rotation of the phone by 15degree.
2. The phone was then rotated around the horizontal line by 15 degree.
3. While maintaining the orientation of the phone, the phone was moved parallel to the reference plane until any part of the phone touches the head. (In this position, point A was located on the line RE-LE). The tilted position is obtained when the contact is on the pinna. If the contact was at any location other than the pinna, the angle of the phone would then be reduced. The tilted position was obtained when any part of the phone was in contact of the ear as well as a second part of the phone was in contact with the head (see Figure 9-2).

© 2011 PCTEST Engineering Laboratory, Inc.

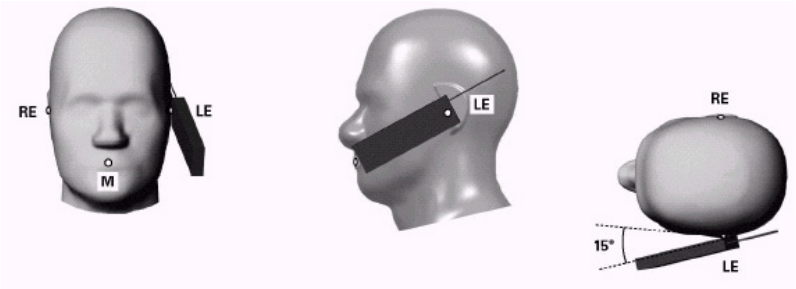

Figure 9-2 Front, Side and Top View of Ear/15º Tilt Position

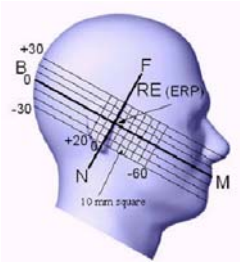

Figure 9-3
Side view w/ relevant markings

Figure 9-4 Body SAR Sample Photo
(Not Actual EUT)

9.4 SAR Evaluations near the Mouth/Jaw Regions of the SAM Phantom

Antennas located near the bottom of a phone may require SAR measurements around the mouth and jaw regions of the SAM head phantom. This typically applies to clam-shell style phones that are generally longer in the unfolded normal use positions or to certain older style long rectangular phones. It has been known for some time that there are SAR measurement difficulties in these regions of the SAM phantom. SAR probes are calibrated in tissue equivalent liquids with sufficient separation between the probe sensors and nearby physical boundaries to ensure scattering does not affect probe calibration. When the probe tip is moved into tight regions with multiple boundaries surrounding its sensors, probe calibration and measurement accuracy can become questionable. In addition, these measurement locations often require a probe to be tilted at steep angles, where it may no longer comply with calibration requirements and measurement protocols, or satisfy the required measurement uncertainty. In some situations it is not feasible to tilt the probe or rotate the phantom, as suggested by measurement standards, to conduct these measurements.

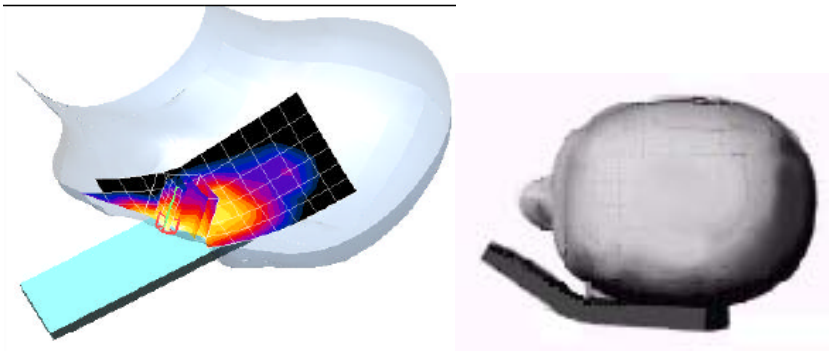

Figure 9-5
SAR Scans near the Jaw/Mouth

In order to ensure there is sufficient conservativeness for ensuring compliance until practical solutions are available, additional measurement considerations are necessary to address these technical difficulties. When measurements are required near the mouth, nose, jaw or similar tight regions of the SAM phantom,

© 2011 PCTEST Engineering Laboratory, Inc.

area or zoom scans are often unable to fully enclose the peak SAR location as required by IEEE 1528 and Supplement C, due to probe orientation and positioning difficulties. Even when limited measurements are possible, the test results could be questionable due to probe calibration and measurement uncertainty issues. Under these circumstances, the following procedures apply, adopted from the FCC guidance on SAR handsets document publication 648474. The SAR required in these regions of SAM should be measured using a flat phantom. **Rectangular shaped phones** should be positioned with its bottom edge positioned from the flat phantom with the same distance provided by the cheek touching position using SAM. The ear reference point (ERP, as defined for SAM) of the phone should be positioned ½ cm from the flat phantom shell. **Clam-shell phones** should be positioned with the hinge against a smooth edge of the flat phantom where the upper half of the phone is unfolded and extended beyond the phantom side wall. The lower half of the phone is secured in the test device holder at a fixed distance below the flat phantom determined by the minimum separation along the lower edge of the phone in the cheek touching position using SAM. Any case with substantial variation in separation distance along the lower edge of a clam shell is discussed with the FCC for best-to-use methodology.

The flat phantom data should allow test results to be compared uniformly across measurement systems, until suitable solutions are available in measurement standards to address certain probe calibration and positioning issues, due to implementation differences between horizontal and upright SAM configurations. These flat phantom procedures are only applicable for stand-alone SAR evaluation in tight regions of the SAM phantom, where measurement is not feasible or test results can be questionable due to probe calibration and accessibility issues. Details on device positioning and photos showing how separation distances are determined are included in the SAR report Photographs. SAR for other regions of the head must be evaluated using SAM; therefore, a phone with antennas at different locations may require flat and SAM phantom evaluation for the different antennas.

9.5 Body Holster /Belt Clip Configurations

Body-worn operating configurations are tested with the belt-clips and holsters attached to the device and positioned against a flat phantom in a normal use configuration (see Figure 9-4). A device with a headset output is tested with a headset connected to the device.

Accessories for Body-worn operation configurations are divided into two categories: those that do not contain metallic components and those that do contain metallic components. When multiple accessories that do not contain metallic components are supplied with the device, the device is tested with only the accessory that dictates the closest spacing to the body. Then multiple accessories that contain metallic components are tested with the device with each accessory. If multiple accessories share an identical metallic component (i.e. the same metallic belt-clip used with different holsters with no other metallic components) only the accessory that dictates the closest spacing to the body is tested.

Body-worn accessories may not always be supplied or available as options for some devices intended to be authorized for body-worn use. In this case, a test configuration with a separation distance between the back of the device and the flat phantom is used. Test position spacing was documented. Transmitters that are designed to operate in front of a person's face, as in push-to-talk configurations, are tested for SAR compliance with the front of the device positioned to face the flat phantom in head fluid. For devices that are carried next to the body such as a shoulder, waist or chest-worn transmitters, SAR compliance is tested with the accessories, including headsets and microphones, attached to the device and positioned against a flat phantom in a normal use configuration.

© 2011 PCTEST Engineering Laboratory, Inc.

10 FCC RF EXPOSURE LIMITS

10.1 Uncontrolled Environment

UNCONTROLLED ENVIRONMENTS are defined as locations where there is the exposure of individuals who have no knowledge or control of their exposure. The general population/uncontrolled exposure limits are applicable to situations in which the general public may be exposed or in which persons who are exposed as a consequence of their employment may not be made fully aware of the potential for exposure or cannot exercise control over their exposure. Members of the general public would come under this category when exposure is not employment-related; for example, in the case of a wireless transmitter that exposes persons in its vicinity.

10.2 Controlled Environment

CONTROLLED ENVIRONMENTS are defined as locations where there is exposure that may be incurred by persons who are aware of the potential for exposure, (i.e. as a result of employment or occupation). In general, occupational/controlled exposure limits are applicable to situations in which persons are exposed as a consequence of their employment, who have been made fully aware of the potential for exposure and can exercise control over their exposure. This exposure category is also applicable when the exposure is of a transient nature due to incidental passage through a location where the exposure levels may be higher than the general population/uncontrolled limits, but the exposed person is fully aware of the potential for exposure and can exercise control over his or her exposure by leaving the area or by some other appropriate means.

Table 10-1
SAR Human Exposure Specified in ANSI/IEEE C95.1-1992 and Health Canada Safety Code 6

HUMAN EXPOSURE LIMITS		
	UNCONTROLLED ENVIRONMENT *General Population* (W/kg) or (mW/g)	CONTROLLED ENVIRONMENT *Occupational* (W/kg) or (mW/g)
SPATIAL PEAK SAR Brain	1.6	8.0
SPATIAL AVERAGE SAR Whole Body	0.08	0.4
SPATIAL PEAK SAR Hands, Feet, Ankles, Wrists	4.0	20

1. The Spatial Peak value of the SAR averaged over any 1 gram of tissue (defined as a tissue volume in the shape of a cube) and over the appropriate averaging time.
2. The Spatial Average value of the SAR averaged over the whole body.
3. The Spatial Peak value of the SAR averaged over any 10 grams of tissue (defined as a tissue volume in the shape of a cube) and over the appropriate averaging time.

© 2011 PCTEST Engineering Laboratory, Inc.

11 FCC 3G MEASUREMENT PROCEDURES

Power measurements were performed using a base station simulator under digital average power.

11.1 Procedures Used to Establish RF Signal for SAR

The following procedures are according to KDB 941225 D01, "SAR Test for 3G Devices v02.".

The device was placed into a simulated call using a base station simulator in a RF shielded chamber. Establishing connections in this manner ensure a consistent means for testing SAR and are recommended for evaluating SAR [4]. Devices under test were evaluated prior to testing, with a fully charged battery and were configured to operate at maximum output power. In order to verify that the device was tested throughout the SAR test at maximum output power, the SAR measurement system measures a "point SAR" at an arbitrary reference point at the start and end of the 1 gram SAR evaluation, to assess for any power drifts during the evaluation. Any power drifts of greater than 5% were repeated.

11.2 SAR Measurement Conditions for UMTS per FCC KDB Publication 941225

11.2.1 Output Power Verification

Maximum output power is measured on the High, Middle and Low channels for each applicable transmission band according to the general descriptions in section 5.2 of 3GPP TS 34.121, using the appropriate RMC or AMR with TPC (transmit power control) set to all "1s".

11.2.2 Head SAR Measurements for Handsets

SAR for head exposure configurations is measured using the 12.2 kbps RMC with TPC bits configured to all "1s". SAR in AMR configurations is not required when the maximum average output of each RF channel for 12.2 kbps AMR is less than 0.25 dB higher than that measured in 12.2 kbps RMC. Otherwise, SAR is measured on the maximum output channel in 12.2 AMR with a 3.4 kbps SRB (signaling radio bearer) using the exposure configuration that resulted in the highest SAR for that RF channel in the 12.2 kbps RMC mode.

11.2.3 Body SAR Measurements

SAR for body exposure configurations is measured using the 12.2 kbps RMC with the TPC bits all "1s".

11.2.4 SAR Measurements for Handsets with Rel 5 HSDPA

Body SAR for HSDPA is not required for handsets with HSDPA capabilities when the maximum average output power of each RF channel with HSDPA active is less than 0.25 dB higher than that measured without HSDPA using 12.2 kbps RMC and the maximum SAR for 12.2 kbps RMC is $\leq$ 75% of the SAR limit. Otherwise, SAR is measured for HSDPA, using an FRC with H-Set 1 in Sub-test 1 and a 12.2 kbps RMC configured in Test Loop Mode 1, using the highest body SAR configuration measured in 12.2 kbps RMC without HSDPA, on the maximum output channel with the body exposure configuration that resulted in the highest SAR in 12.2 kbps RMC mode for that RF channel.

The H-set used in FRC for HSDPA should be configured according to the UE category of a test device. The number of HS-DSCH/HSPDSCHs, HARQ processes, minimum inter-TTI interval,

© 2011 PCTEST Engineering Laboratory, Inc.

transport block sizes and RV coding sequence are defined by the applicable H-set. To maintain a consistent test configuration and stable transmission conditions, QPSK is used in the FRC for SAR testing. HS-DPCCH should be configured with a CQI feedback cycle of 2 ms to maintain a constant rate of active CQI slots. DPCCH and DPDCH gain factors of βc=9 and βd=15, and power offset parameters of ΔACK= ΔNACK =5 and ΔCQI=2 is used. The CQI value is determined by the UE category, transport block size, number of HS-PDSCHs and modulation used in the FRC.

11.2.5 SAR Measurements for Handsets with Rel 6 HSUPA

Body SAR for HSUPA is not required when the maximum average output of each RF channel with HSUPA/HSDPA active is less than 0.25 dB higher than as measured without HSUPA/HSDPA using 12.2 kbps RMC and maximum SAR for 12.2 kbps RMC is ≤ 75 % of the SAR limit. Otherwise SAR is measured on the maximum output channel for the body exposure configuration produced highest SAR in 12.2 kbps RMC for that RF channel, using the additional procedures under "Release 6 HSPA data devices"

Head SAR for VOIP operations under HSPA is not required when maximum average output of each RF channel with HSPA is less than 0.25 dB higher than as measured using 12.2 kbps RMC. Otherwise SAR is measured using same HSPA configuration as used for body SAR.

Sub-test	β_c	β_d	β_d (SF)	β_c/β_d	β_{hs} (1)	β_{ec}	β_{ed}	β_{ed} (SF)	β_{ed} (codes)	CM (2) (dB)	MPR (dB)	AG (4) Index	E-TFCI
1	11/15 (3)	15/15 (3)	64	11/15 (3)	22/15	209/225	1039/225	4	1	1.0	0.0	20	75
2	6/15	15/15	64	6/15	12/15	12/15	94/75	4	1	3.0	2.0	12	67
3	15/15	9/15	64	15/9	30/15	30/15	β_{ed1}: 47/15 β_{ed2}: 47/15	4	2	2.0	1.0	15	92
4	2/15	15/15	64	2/15	4/15	2/15	56/75	4	1	3.0	2.0	17	71
5	15/15 (4)	15/15 (4)	64	15/15 (4)	30/15	24/15	134/15	4	1	1.0	0.0	21	81

Note 1: Δ_{ACK}, Δ_{NACK} and $\Delta_{CQI} = 8 \Leftrightarrow A_{hs} = \beta_{hs}/\beta_c = 30/15 \Leftrightarrow \beta_{hs} = 30/15 * \beta_c$.
Note 2: CM = 1 for β_c/β_d =12/15, β_{hs}/β_c=24/15. For all other combinations of DPDCH, DPCCH, HS- DPCCH, E-DPDCH and E-DPCCH the MPR is based on the relative CM difference.
Note 3: For subtest 1 the β_c/β_d ratio of 11/15 for the TFC during the measurement period (TF1, TF0) is achieved by setting the signaled gain factors for the reference TFC (TF1, TF1) to β_c = 10/15 and β_d = 15/15.
Note 4: For subtest 5 the β_c/β_d ratio of 15/15 for the TFC during the measurement period (TF1, TF0) is achieved by setting the signaled gain factors for the reference TFC (TF1, TF1) to β_c = 14/15 and β_d = 15/15.
Note 5: Testing UE using E-DPDCH Physical Layer category 1 Sub-test 3 is not required according to TS 25.306 Table 5.1g.
Note 6: β_{ed} can not be set directly; it is set by Absolute Grant Value.

© 2011 PCTEST Engineering Laboratory, Inc.

11.3 RF Conducted Powers

11.3.1 GSM Conducted Powers

		Maximum Burst-Averaged Output Power				
		Voice	*GPRS/EDGE Data (GMSK)*		*EDGE Data (8-PSK)*	
Band	**Channel**	**GSM [dBm] CS (1 Slot)**	**GPRS [dBm] 1 Tx Slot**	**GPRS [dBm] 2 Tx Slot**	**EDGE [dBm] 1 Tx Slot**	**EDGE [dBm] 2 Tx Slot**
Cellular	128	32.53	32.54	**32.00**	26.52	26.00
	190	32.42	32.49	**31.99**	25.96	25.47
	251	32.23	32.25	**31.82**	25.26	24.68
PCS	512	29.99	30.02	**29.76**	25.73	25.50
	661	30.04	30.08	**29.70**	25.58	25.45
	810	29.78	29.86	**29.58**	25.25	25.02

		Calculated Maximum Frame-Averaged Output Power				
		Voice	*GPRS/EDGE Data (GMSK)*		*EDGE Data (8-PSK)*	
Band	**Channel**	**GSM [dBm] CS (1 Slot)**	**GPRS [dBm] 1 Tx Slot**	**GPRS [dBm] 2 Tx Slot**	**EDGE [dBm] 1 Tx Slot**	**EDGE [dBm] 2 Tx Slot**
Cellular	128	23.50	23.51	**25.98**	17.49	19.98
	190	23.39	23.46	**25.97**	16.93	19.45
	251	23.20	23.22	**25.80**	16.23	18.66
PCS	512	20.96	20.99	**23.74**	16.70	19.48
	661	21.01	21.05	**23.68**	16.55	19.43
	810	20.75	20.83	**23.56**	16.22	19.00

Note:

- Both burst-averaged and calculated frame-averaged powers are included.
- Frame-averaged power was calculated from the measured burst-averaged power by converting the slot powers into linear units and calculating the energy over 8 timeslots.
- The bolded GPRS/EDGE modes were selected according to the highest frame-averaged output power table per to KDB 941225 D03.
- GPRS/EDGE (GMSK) conducted powers were measured with CS1. EDGE (8-PSK) powers were measured with MCS7.

GSM Class: B
GPRS Multislot class: 10 (max 2 Tx Uplink slots)
EDGE Multislot class: 10 (max 2Tx Uplink slots)
DTM Multislot Class: N/A

© 2011 PCTEST Engineering Laboratory, Inc.

11.3.2 HSPA Conducted Powers

3GPP Release Version	Mode	3GPP 34.121 Subtest	Cellular Band [dBm]			PCS Band [dBm]			βc	βd	MPR
			4132	4183	4233	9262	9400	9538			
99	WCDMA	12.2 kbps RMC	**23.38**	23.21	23.32	**23.45**	23.37	23.31	-	-	-
99		12.2 kbps AMR	23.32	23.18	23.23	23.44	23.36	23.29	-	-	-
6	HSDPA	Subtest 1	23.31	23.27	23.28	23.48	23.43	23.22	2	15	0
6		Subtest 2	**23.41**	23.26	23.33	**23.52**	23.42	23.23	11	15	0
6		Subtest 3	22.90	22.77	22.87	23.13	22.91	22.74	15	8	0.5
6		Subtest 4	22.86	22.76	22.81	23.01	22.88	22.68	15	4	0.5
6	HSUPA	Subtest 1	23.04	23.02	23.08	23.20	23.17	23.09	10	15	0
6		Subtest 2	21.84	21.51	21.61	21.82	21.56	21.51	6	15	2
6		Subtest 3	22.19	22.01	22.14	22.21	22.16	22.19	15	9	1
6		Subtest 4	22.05	21.93	21.99	22.02	21.88	22.10	2	15	2
6		Subtest 5	23.17	**23.24**	23.23	**23.35**	23.26	23.14	14	15	0

It is expected by the manufacturer that MPR for some HSUPA subtests may be up to 1 dB more than specified by 3GPP according to the chipset implementation in this model. Detailed information is included in the operational description explaining how the MPR is applied for this model.

WCDMA SAR was tested under RMC 12.2 kbps with HSPA Inactive per KDB Publication 941225 D01. HSPA SAR was not required since the average output power of the HSPA subtests was not more than 0.25 dB higher than the RMC level and SAR was less than 1.2 W/kg.

Figure 11-1
Power Measurement Setup

© 2011 PCTEST Engineering Laboratory, Inc.

12 SAR TESTING WITH IEEE 802.11 TRANSMITTERS

Normal network operating configurations are not suitable for measuring the SAR of 802.11 a/b/g/n transmitters. Unpredictable fluctuations in network traffic and antenna diversity conditions can introduce undesirable variations in SAR results. The SAR for these devices should be measured using chipset based test mode software to ensure the results are consistent and reliable.

12.1 General Device Setup

Chipset based test mode software is hardware dependent and generally varies among manufacturers. The device operating parameters established in test mode for SAR measurements must be identical to those programmed in production units, including output power levels, amplifier gain settings and other RF performance tuning parameters. The test frequencies should correspond to actual channel frequencies defined for domestic use. SAR for devices with switched diversity should be measured with only one antenna transmitting at a time during each SAR measurement, according to a fixed modulation and data rate. The same data pattern should be used for all measurements.

12.2 Frequency Channel Configurations [27]

802.11 a/b/g/n and operating modes are tested independently according to the service requirements in each frequency band. 802.11 b/g/n modes are tested on channels 1, 6 and 11. 802.11a/n are tested for UNII operations on channels 36 and 48 in the 5.15-5.25 GHz band; channels 52 and 64 in the 5.25-5.35 GHz band; channels 104, 116, 124 and 136 in the 5.470-5.725 GHz band; and channels 149 and 161 in the 5.8 GHz band. When 5.8 GHz §15.247 is also available, channels 149, 157 and 165 should be tested instead of the UNII channels. These are referred to as the "default test channels". 802.11g and n modes were evaluated only if the output power was 0.25 dB higher than the corresponding 802.11a or b mode.

Table 12-1
802.11 Test Channels per FCC Requirements

Mode		GHz	Channel	Turbo Channel	"Default Test Channels" §15.247 802.11b	§15.247 802.11g	UNII	
802.11 b/g		2.412	1		√	∇		
		2.437	6	6	√	∇		
		2.462	11		√	∇		
802.11a	UNII	5.18	36				√	
		5.20	40	42 (5.21 GHz)				*
		5.22	44					*
		5.24	48	50 (5.25 GHz)			√	
		5.26	52				√	
		5.28	56	58 (5.29 GHz)				*
		5.30	60					*
		5.32	64				√	
		5.500	100	Unknown				*
		5.520	104				√	
		5.540	108					*
		5.560	112					*
		5.580	116				√	
		5.600	120					*
		5.620	124				√	
		5.640	128					*
		5.660	132					*
		5.680	136				√	
		5.700	140					*
	UNII or §15.247	5.745	149		√		√	
		5.765	153	152 (5.76 GHz)		*		*
		5.785	157		√			*
		5.805	161	160 (5.80 GHz)		*	√	
	§15.247	5.825	165		√			

© 2011 PCTEST Engineering Laboratory, Inc.

Table 12-2
IEEE 802.11b Average RF Power

Mode	Freq [MHz]	Channel	Conducted Power [dBm] Data Rate [Mbps] 1	2	5.5	11
802.11b	2412	1	16.16	16.11	16.03	16.05
802.11b	2437	6	16.46	16.45	16.39	16.29
802.11b	2462	11	16.71	16.64	16.58	16.23

Table 12-3
IEEE 802.11g Average RF Power

Mode	Freq [MHz]	Channel	Conducted Power [dBm] Data Rate [Mbps] 6	9	12	18	24	36	48	54
802.11g	2412	1	14.16	14.09	14.11	14.21	14.23	14.16	14.08	14.19
802.11g	2437	6	14.62	14.55	14.53	14.49	14.38	14.48	14.35	14.51
802.11g	2462	11	14.62	14.54	14.55	14.43	14.45	14.61	14.59	14.53

Table 12-4
IEEE 802.11n Average RF Power

Mode	Freq [MHz]	Channel	Conducted Power [dBm] Data Rate [Mbps] 6.5	13	20	26	39	52	58	65
802.11n	2412	1	11.32	11.48	11.41	11.45	11.53	11.39	11.58	11.42
802.11n	2437	6	11.68	11.69	11.73	11.63	11.53	11.59	11.44	11.53
802.11n	2462	11	11.85	11.65	11.78	11.79	11.84	11.85	11.91	11.53

Table 12-5
IEEE 802.11a Average RF Power

Mode	Freq [MHz]	Channel	Conducted Power [dBm] Data Rate [Mbps] 6	9	12	18	24	36	48	54
802.11a	**5180**	**36**	13.35	13.29	13.15	13.32	13.33	13.28	13.31	13.27
802.11a	5200	40	13.46	13.44	13.23	13.32	13.35	13.29	13.39	13.40
802.11a	5220	44	13.33	13.28	13.45	13.31	13.41	13.24	13.18	13.35
802.11a	**5240**	**48**	13.27	13.24	13.23	13.34	13.31	13.19	13.23	13.32
802.11a	**5260**	**52**	13.18	13.25	13.29	13.35	13.30	13.25	13.38	13.29
802.11a	5280	56	13.29	13.31	13.30	13.36	13.27	13.26	13.34	13.31
802.11a	5300	60	13.07	13.19	13.15	13.25	13.23	13.14	13.19	13.23
802.11a	**5320**	**64**	13.01	13.08	13.05	13.15	13.11	13.16	13.20	13.21
802.11a	5500	100	13.19	13.31	13.28	13.31	13.33	13.23	13.35	13.33
802.11a	**5520**	**104**	13.18	13.21	13.19	13.27	13.24	13.18	13.30	13.29
802.11a	5540	108	13.11	13.08	13.13	13.24	13.18	13.15	13.27	13.20
802.11a	5560	112	13.08	13.06	13.09	13.13	13.10	13.09	13.23	13.18
802.11a	**5580**	**116**	13.04	13.07	13.06	13.10	13.08	13.09	13.17	13.12
802.11a	5600	120	12.95	13.00	13.06	13.01	13.02	13.01	13.05	13.09
802.11a	**5620**	**124**	12.90	12.95	12.98	13.01	12.95	12.89	13.01	13.01
802.11a	5640	128	12.86	12.90	12.84	12.94	12.91	12.89	12.98	12.99
802.11a	5660	132	12.72	12.86	12.84	12.90	12.85	12.80	12.92	12.95
802.11a	**5680**	**136**	12.71	12.78	12.76	12.85	12.84	12.77	12.89	12.89
802.11a	5700	140	12.72	12.71	12.76	12.85	12.77	12.79	12.87	12.81
802.11a	**5745**	**149**	13.45	13.32	13.44	13.61	13.54	13.62	13.53	13.42
802.11a	5765	153	13.44	13.35	13.41	13.43	13.49	13.44	13.48	13.43
802.11a	**5785**	**157**	13.47	13.55	13.38	13.52	13.49	13.57	13.45	13.19
802.11a	**5805**	**161**	13.44	13.40	13.49	13.31	13.46	13.43	13.39	13.34
802.11a	5825	165	13.43	13.30	13.44	13.46	13.52	13.48	13.50	13.28

© 2011 PCTEST Engineering Laboratory, Inc.

Table 12-6
IEEE 802.11n Average RF Power

Mode	Freq [MHz]	Channel	Conducted Power [dBm] Data Rate [Mbps] 6.5	13	20	26	39	52	58	65
802.11n	**5180**	**36**	12.37	12.34	12.29	12.33	12.31	12.18	12.35	12.34
802.11n	5200	40	12.34	12.32	12.39	12.43	12.35	12.33	12.32	12.38
802.11n	5220	44	12.30	12.30	12.29	12.31	12.29	12.31	12.29	12.23
802.11n	**5240**	**48**	12.28	12.31	12.19	12.25	12.25	12.29	12.33	12.22
802.11n	**5260**	**52**	12.14	12.21	12.25	12.30	12.43	12.38	12.39	12.46
802.11n	5280	56	12.14	12.16	12.30	12.28	12.26	12.31	12.41	12.36
802.11n	5300	60	12.00	12.08	12.23	12.25	12.28	12.36	12.34	12.22
802.11n	**5320**	**64**	12.02	12.03	12.14	12.18	12.22	12.23	12.19	12.27
802.11n	5500	100	12.19	12.07	12.22	12.27	12.34	12.27	12.32	12.36
802.11n	**5520**	**104**	12.06	12.10	12.14	12.18	12.30	12.29	12.28	12.26
802.11n	5540	108	12.03	12.08	12.18	12.19	12.13	12.21	12.23	12.22
802.11n	5560	112	11.95	12.01	12.10	12.09	12.17	12.16	12.14	12.20
802.11n	**5580**	**116**	11.90	11.90	12.00	12.06	12.09	12.07	12.10	12.18
802.11n	5600	120	11.95	11.90	12.06	11.97	12.03	12.05	12.13	12.10
802.11n	**5620**	**124**	11.77	11.85	11.88	11.90	11.95	11.93	12.01	12.40
802.11n	5640	128	11.81	11.75	11.94	11.89	11.94	11.88	11.97	12.01
802.11n	5660	132	11.68	11.67	11.84	11.85	11.86	11.93	11.85	11.93
802.11n	**5680**	**136**	11.62	11.69	11.75	11.86	11.75	11.74	11.88	11.90
802.11n	5700	140	11.60	11.55	11.73	11.74	11.74	11.77	11.84	11.83
802.11n	**5745**	**149**	12.44	12.23	12.10	12.29	12.04	12.18	12.31	12.19
802.11n	5765	153	12.39	12.41	12.33	12.28	12.19	12.43	12.28	12.31
802.11n	**5785**	**157**	12.25	12.36	12.19	12.29	12.15	12.23	12.29	12.12
802.11n	**5805**	**161**	12.34	12.28	12.31	12.35	12.40	12.18	12.12	12.14
802.11n	5825	165	12.30	12.39	12.31	12.35	12.29	12.22	12.41	12.23

- Justification for reduced test configurations for WIFI channels per KDB Publication 248227 and April 2010 FCC/TCB Meeting Notes:

  - For 2.4 GHz, highest average RF output power channel for the lowest data rate for IEEE 802.11b were selected for SAR evaluation. IEEE 802.11 g/n modes were not investigated since the average output powers were not greater than 0.25 dB than that of the corresponding channel in the lowest data rate IEEE 802.11b mode.
  - For 5 GHz, highest average RF output power channel for the lowest data rate fof IEEE 802.11a were selected for SAR evaluation. IEEE 802.11 n modes were not investigated since the average output powers were not greater than 0.25 dB than that of the corresponding channel in the lowest data rate IEEE 802.11a mode.
  - The underlined data rate and channel above were tested for SAR.

Figure 12-1
Power Measurement Setup

© 2011 PCTEST Engineering Laboratory, Inc.

13 FCC PERSONAL WIRELESS ROUTER CONFIGURATIONS

13.1 Personal Wireless Router Considerations

Some battery-operated handsets have the capability to transmit and receive internet connectivity through simultaneous transmission of WIFI in conjunction with a separate licensed transmitter. The FCC has provided guidance in KDB Publication 941225 D06 for handsets greater than 9 cm x 5 cm where SAR test considerations are based on a composite test separation distance of 10 mm from the edges, front and back of the device with antennas 2.5 cm or closer to the edge of the device, determined from general mixed use conditions for this type of devices. Since the hotspot SAR results may overlap with the body-worn accessory SAR requirements, the more conservative configurations can be considered, thus excluding some body-worn accessory SAR tests.

13.2 SAR Test Setup for Personal Wireless Router Features

When the user enables the personal wireless router functions for the handset, actual operations include simultaneous transmission of both the WIFI transmitter and another licensed transmitter. Both transmitters often do not transmit at the same transmitting frequency and thus cannot be evaluated for SAR under actual use conditions. Therefore, SAR must be evaluated for each frequency transmission and mode separately and summed with the WIFI transmitter according to KDB 648474 publication procedures. Therefore, the measurements were performed for each standalone transmitter for the required exposure conditions. The “Portable Hotspot” feature on the handset was NOT activated, to ensure the SAR measurements were valid within a single transmission frequency.

13.3 Power Reduction for Portable Hotspot Mode

This model does not support any power reduction for portable hotspot mode.

© 2011 PCTEST Engineering Laboratory, Inc.

13.4 SAR Test Configurations

Table 13-1
Mobile Hotspot Sides for SAR Testing

Mobile Hotspot Sides for SAR Testing						
Mode	Back	Front	Top	Bottom	Right	Left
GPRS 850	Yes	Yes	No	Yes	Yes	Yes
GPRS 1900	Yes	Yes	No	Yes	Yes	Yes
WCDMA 850	Yes	Yes	No	Yes	Yes	Yes
WCDMA 1900	Yes	Yes	No	Yes	Yes	Yes
2.4 GHz WLAN	Yes	Yes	No	No	No	Yes

When Hotspot is enabled all 5 GHz bands are disabled.

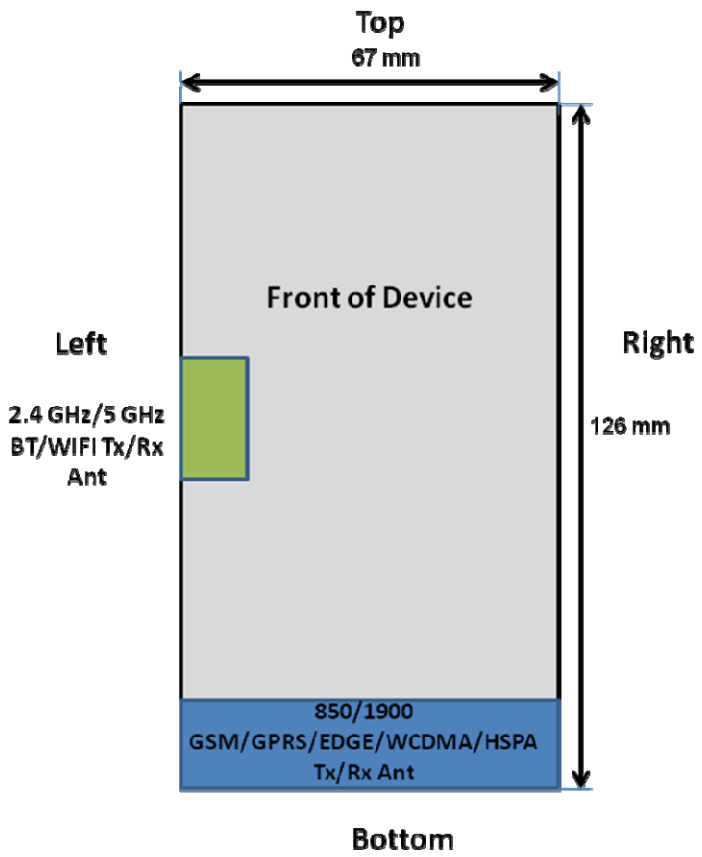

Figure 13-1 Identification of Sides for SAR Testing

Note: Per FCC KDB Publication 941225 D06, the edges with antennas within 2.5 cm are required to be evaluated for SAR. The antenna distance document contains the measured distances of the actual device.

© 2011 PCTEST Engineering Laboratory, Inc.

14 SYSTEM VERIFICATION

14.1 Tissue Verification

Table 14-1
Measured Tissue Properties

Calibrated for Tests Performed on:	Tissue Type	Measured Frequency (MHz)	Measured Conductivity, σ (S/m)	Measured Dielectric Constant, ε	TARGET Conductivity, σ (S/m)	TARGET Dielectric Constant, ε	% dev σ	% dev ε
08/09/2011	835H	820	0.935	43.61	0.90	41.57	4.12%	4.90%
		835	0.943	43.14	0.90	41.50	4.78%	3.95%
		850	0.957	43.19	0.92	41.50	4.48%	4.07%
08/09/2011	835B	820	0.959	55.00	0.97	55.28	-1.03%	-0.51%
		835	0.970	54.93	0.97	55.20	0.00%	-0.49%
		850	0.991	54.74	0.99	55.15	0.30%	-0.75%
08/10/2011	1900H	1850	1.338	41.59	1.40	40.00	-4.43%	3.98%
		1880	1.351	41.46	1.40	40.00	-3.50%	3.65%
		1910	1.386	41.37	1.40	40.00	-1.00%	3.42%
08/04/2011	1900B	1850	1.455	51.55	1.52	53.30	-4.28%	-3.28%
		1880	1.476	51.41	1.52	53.30	-2.89%	-3.55%
		1910	1.475	51.10	1.52	53.30	-2.96%	-4.13%
08/11/2011	1900B	1850	1.456	51.89	1.52	53.30	-4.21%	-2.65%
		1880	1.486	51.77	1.52	53.30	-2.24%	-2.87%
		1910	1.527	51.67	1.52	53.30	0.46%	-3.06%
08/11/2011	2450H	2401	1.817	38.16	1.76	39.30	3.36%	-2.90%
		2450	1.880	38.01	1.80	39.20	4.44%	-3.04%
		2499	1.934	37.76	1.85	39.14	4.43%	-3.51%
08/10/2011	2450B	2401	1.809	52.40	1.90	52.77	-4.94%	-0.69%
		2450	1.866	52.34	1.95	52.70	-4.31%	-0.68%
		2499	1.927	51.88	2.02	52.64	-4.56%	-1.44%
08/09/2011	5200H-5800H	5170	4.561	34.94	4.63	36.03	-1.47%	-3.03%
		5210	4.629	35.02	4.67	35.99	-0.88%	-2.70%
		5250	4.666	35.01	4.71	35.95	-0.93%	-2.61%
		5270	4.707	34.83	4.73	35.93	-0.49%	-3.06%
		5310	4.739	34.80	4.77	35.89	-0.65%	-3.04%
		5350	4.838	34.91	4.81	35.85	0.58%	-2.62%
		5470	4.930	34.53	4.93	35.70	-0.08%	-3.26%
		5510	4.938	34.52	4.98	35.64	-0.76%	-3.13%
		5550	5.057	34.45	5.02	35.58	0.78%	-3.16%
		5570	5.051	34.42	5.04	35.55	0.24%	-3.17%
		5610	5.078	34.30	5.08	35.49	-0.04%	-3.35%
		5650	5.127	34.20	5.12	35.45	0.14%	-3.53%
		5670	5.204	34.15	5.14	35.43	1.25%	-3.61%
		5710	5.194	34.15	5.18	35.39	0.27%	-3.50%
		5750	5.245	34.02	5.22	35.35	0.48%	-3.76%
		5770	5.297	34.10	5.24	35.33	1.09%	-3.48%
		5810	5.326	33.89	5.28	35.29	0.85%	-3.97%
		5850	5.343	33.83	5.32	35.25	0.38%	-4.03%
08/10/2011	5200B-5800B	5170	5.090	47.61	5.26	49.06	-3.31%	-2.95%
		5210	5.150	47.40	5.31	49.00	-3.03%	-3.27%
		5250	5.204	47.42	5.36	48.95	-2.87%	-3.12%
		5270	5.245	47.22	5.38	48.92	-2.53%	-3.47%
		5310	5.275	47.23	5.43	48.87	-2.82%	-3.35%
		5350	5.365	47.25	5.47	48.81	-1.92%	-3.20%
		5470	5.484	46.96	5.62	48.65	-2.33%	-3.47%
		5510	5.533	47.00	5.66	48.59	-2.26%	-3.28%
		5550	5.593	46.81	5.71	48.54	-2.01%	-3.56%
		5570	5.641	46.74	5.73	48.51	-1.57%	-3.65%
		5610	5.675	46.84	5.78	48.46	-1.78%	-3.34%
		5650	5.721	46.65	5.83	48.40	-1.79%	-3.62%
		5670	5.775	46.76	5.85	48.38	-1.25%	-3.34%
		5710	5.825	46.56	5.90	48.32	-1.19%	-3.65%
		5750	5.896	46.47	5.94	48.27	-0.77%	-3.73%
		5770	5.925	46.36	5.97	48.24	-0.67%	-3.90%
		5810	5.954	46.40	6.01	48.19	-0.96%	-3.71%
		5850	6.005	46.33	6.06	48.13	-0.87%	-3.74%

© 2011 PCTEST Engineering Laboratory, Inc.

Note: KDB Publication 450824 was ensured to be applied for probe calibration frequencies greater than or equal to 50 MHz of the DUT frequencies.

Probe calibration used within ±100 MHz of the test frequency in either 5.725 - 5.85 or 5.47-5.725 GHz is acceptable per KDB Publication 865664 since the design of the SAR probe supports the extended frequency, provided the DASY software version recommended is used for the tests, and the expanded calibration uncertainty (k=2) is less than or equal to 15% (See SAR probe calibration certificate for this information). The dielectric and conductivities measured are within 5% of the target parameters specified in Supplement C 01-01.

The above measured tissue parameters were used in the DASY software to perform interpolation via the DASY software to determine actual dielectric parameters at the test frequencies (per IEEE 1528 6.6.1.2). The SAR test plots may slightly differ from the table above since the DASY software rounds to three significant digits.

14.2 Measurement Procedure for Tissue verification

1) The network analyzer and probe system was configured and calibrated.
2) The probe was immersed in the sample which was placed in a nonmetallic container. Trapped air bubbles beneath the flange were minimized by placing the probe at a slight angle.
3) The complex admittance with respect to the probe aperture was measured
4) The complex relative permittivity , for example from the below equation (Pournaropoulos and Misra):

$$Y = \frac{j2\omega\varepsilon_r\varepsilon_0}{\left[\ln(b/a)\right]^2}\int_a^b\int_a^b\int_0^\pi \cos\phi' \frac{\exp\left[-j\omega r(\mu_0\varepsilon_r^{'}\varepsilon_0)^{1/2}\right]}{r} d\phi' d\rho' d\rho$$

where Y is the admittance of the probe in contact with the sample, the primed and unprimed coordinates refer to source and observation points, respectively, $r^2 = \rho^2 + \rho'^2 - 2\rho\rho'\cos\phi'$, ω is the angular frequency, and $j = \sqrt{-1}$.

© 2011 PCTEST Engineering Laboratory, Inc.

14.3 Test System Verification

Prior to assessment, the system is verified to ±10% of the manufacturer SAR measurement on the reference dipole at the time of calibration.

Table 14-2
System Verification Results

System Verification TARGET & MEASURED										
Date:	Amb. Temp (°C)	Liquid Temp (°C)	Input Power (W)	Tissue Frequency (MHz)	Dipole SN	Tissue Type	Measured SAR_{1g} (W/kg)	1 W Target SAR_{1g} (W/kg)	1 W Normalized SAR_{1g} (W/kg)	Deviation (%)
08/09/2011	24.2	23.1	0.100	835	4d047	Head	0.994	9.530	9.940	4.30%
08/09/2011	24.3	23.2	0.100	835	4d047	Body	0.939	9.850	9.390	-4.67%
08/10/2011	23.4	22.0	0.100	1900	502	Head	4.14	40.200	41.400	2.99%
08/04/2011	24.7	23.1	0.100	1900	502	Body	4.04	41.100	40.400	-1.70%
08/11/2011	23.1	22.2	0.100	1900	502	Body	4.25	41.100	42.500	3.41%
08/11/2011	24.0	22.9	0.025	2450	797	Head	1.37	53.300	54.800	2.81%
08/10/2011	24.5	23.1	0.0158	2450	797	Body	0.865	52.300	54.747	4.68%
08/09/2011	23.3	21.8	0.100	5200	1057	Head	8.08	83.100	80.800	-2.77%
08/10/2011	23.3	21.5	0.100	5200	1057	Body	8.3	77.700	83.000	6.82%
08/09/2011	23.3	21.4	0.100	5500	1057	Head	8.37	90.100	83.700	-7.10%
08/10/2011	23.5	21.7	0.100	5500	1057	Body	8.62	84.400	86.200	2.13%
08/09/2011	23.5	21.6	0.100	5800	1057	Head	8.47	82.900	84.700	2.17%
08/10/2011	23.7	21.8	0.100	5800	1057	Body	7.79	75.000	77.900	3.87%

Note: Per KDB Publication 865664, when a reference dipole is not defined within ±100MHz of the test frequency, the system verification may be conducted within ± 200 MHz of the center frequency of the measurement frequencies if the SAR probe calibration is valid and the same tissue-equivalent matter is used for verification and test measurements.

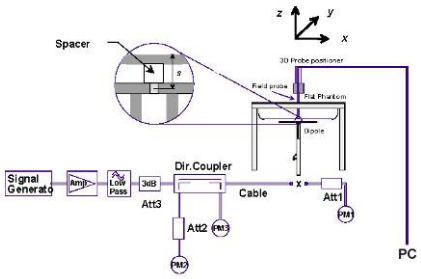

Figure 14-1
System Verification Setup Diagram

Figure 14-2
System Verification Setup Photo

© 2011 PCTEST Engineering Laboratory, Inc.

15 SAR DATA SUMMARY

Table 15-1
GSM 850 Head SAR Results

MEASUREMENT RESULTS								
FREQUENCY		Mode/Band	Conducted Power [dBm]	Power Drift [dB]	Side	Test Position	Serial Number	SAR (1g)
MHz	Ch.							(W/kg)
836.60	190	GSM 850	32.42	0.04	Right	Touch	FI-195-A	0.282
836.60	190	GSM 850	32.42	0.02	Right	Tilt	FI-195-A	0.197
836.60	190	GSM 850	32.42	0.04	Left	Touch	FI-195-A	0.271
836.60	190	GSM 850	32.42	-0.01	Left	Tilt	FI-195-A	0.177
ANSI / IEEE C95.1 1992 - SAFETY LIMIT Spatial Peak Uncontrolled Exposure/General Population					**Head 1.6 W/kg (mW/g)** averaged over 1 gram			

Notes:

1. The test data reported are the worst-case SAR value with the position set in a typical configuration. Test procedures used were according to FCC/OET Bulletin 65, Supplement C [June 2001].
2. All modes of operation were investigated, and worst-case results are reported.
3. Batteries are fully charged for all readings. Standard battery was used.
4. Tissue parameters and temperatures are listed on the SAR plots.
5. Liquid tissue depth was at least 15.0 cm.
6. Justification for reduced test configurations: Per FCC/OET Bulletin 65 Supplement C (June 2001) and Public Notice DA-02-1438, if the SAR measured at the middle channel for each test configuration (left, right, cheek/touch, tilt/ear, extended and retracted) is at least 3.0 dB lower than the SAR limit, testing at the high and low channels is optional for such test configuration(s).
7. All samples tested were electrically identical per the applicant.

© 2011 PCTEST Engineering Laboratory, Inc.

Table 15-2
GSM 1900 Head SAR Results

MEASUREMENT RESULTS								
FREQUENCY		Mode/Band	Conducted Power [dBm]	Power Drift [dB]	Side	Test Position	Serial Number	SAR (1g)
MHz	Ch.							(W/kg)
1880.00	661	GSM 1900	30.04	-0.06	Right	Touch	FI-195-A	0.328
1880.00	661	GSM 1900	30.04	0.01	Right	Tilt	FI-195-A	0.076
1880.00	661	GSM 1900	30.04	0.09	Left	Touch	FI-195-A	0.141
1880.00	661	GSM 1900	30.04	-0.05	Left	Tilt	FI-195-A	0.071
ANSI / IEEE C95.1 1992 - SAFETY LIMIT Spatial Peak Uncontrolled Exposure/General Population					**Head 1.6 W/kg (mW/g)** averaged over 1 gram			

Notes:

1. The test data reported are the worst-case SAR value with the position set in a typical configuration. Test procedures used were according to FCC/OET Bulletin 65, Supplement C [June 2001].
2. All modes of operation were investigated, and worst-case results are reported.
3. Batteries are fully charged for all readings. Standard battery was used.
4. Tissue parameters and temperatures are listed on the SAR plots.
5. Liquid tissue depth was at least 15.0 cm.
6. Justification for reduced test configurations: Per FCC/OET Bulletin 65 Supplement C (June 2001) and Public Notice DA-02-1438, if the SAR measured at the middle channel for each test configuration (left, right, cheek/touch, tilt/ear, extended and retracted) is at least 3.0 dB lower than the SAR limit, testing at the high and low channels is optional for such test configuration(s).
7. All samples tested were electrically identical per the applicant.

© 2011 PCTEST Engineering Laboratory, Inc.

Table 15-3
WCDMA 850 Head SAR Results

MEASUREMENT RESULTS								
FREQUENCY		Mode/Band	Conducted Power [dBm]	Power Drift [dB]	Side	Test Position	Serial Number	SAR (1g)
MHz	Ch.							(W/kg)
836.60	4183	WCDMA 850	23.21	0.01	Right	Touch	FI-195-A	0.311
836.60	4183	WCDMA 850	23.21	0.03	Right	Tilt	FI-195-A	0.187
836.60	4183	WCDMA 850	23.21	-0.03	Left	Touch	FI-195-A	0.269
836.60	4183	WCDMA 850	23.21	0.04	Left	Tilt	FI-195-A	0.173
ANSI / IEEE C95.1 1992 - SAFETY LIMIT Spatial Peak Uncontrolled Exposure/General Population					**Head 1.6 W/kg (mW/g)** averaged over 1 gram			

Notes:

1. The test data reported are the worst-case SAR value with the position set in a typical configuration. Test procedures used were according to FCC/OET Bulletin 65, Supplement C [June 2001].
2. All modes of operation were investigated, and worst-case results are reported.
3. Batteries are fully charged for all readings. Standard battery was used.
4. Tissue parameters and temperatures are listed on the SAR plots.
5. Liquid tissue depth was at least 15.0 cm.
6. Justification for reduced test configurations: Per FCC/OET Bulletin 65 Supplement C (June 2001) and Public Notice DA-02-1438, if the SAR measured at the middle channel for each test configuration (left, right, cheek/touch, tilt/ear, extended and retracted) is at least 3.0 dB lower than the SAR limit, testing at the high and low channels is optional for such test configuration(s).
7. WCDMA mode was tested under RMC 12.2 kbps with HSPA Inactive per KDB Publication 941225 D01.
8. All samples tested were electrically identical per the applicant.

© 2011 PCTEST Engineering Laboratory, Inc.

Table 15-4
WCDMA 1900 Head SAR Results

MEASUREMENT RESULTS								
FREQUENCY		Mode	Conducted Power [dBm]	Power Drift [dB]	Side	Test Position	Serial Number	SAR (1g)
MHz	Ch.							(W/kg)
1880.00	9400	WCDMA 1900	23.37	0.01	Right	Touch	FI-195-A	0.334
1880.00	9400	WCDMA 1900	23.37	-0.09	Right	Tilt	FI-195-A	0.082
1880.00	9400	WCDMA 1900	23.37	0.07	Left	Touch	FI-195-A	0.166
1880.00	9400	WCDMA 1900	23.37	0.04	Left	Tilt	FI-195-A	0.107
ANSI / IEEE C95.1 1992 - SAFETY LIMIT Spatial Peak Uncontrolled Exposure/General Population					**Head 1.6 W/kg (mW/g)** averaged over 1 gram			

Notes:

1. The test data reported are the worst-case SAR value with the position set in a typical configuration. Test procedures used were according to FCC/OET Bulletin 65, Supplement C [June 2001].
2. All modes of operation were investigated, and worst-case results are reported.
3. Batteries are fully charged for all readings. Standard battery was used.
4. Tissue parameters and temperatures are listed on the SAR plots.
5. Liquid tissue depth was at least 15.0 cm.
6. Justification for reduced test configurations: Per FCC/OET Bulletin 65 Supplement C (June 2001) and Public Notice DA-02-1438, if the SAR measured at the middle channel for each test configuration (left, right, cheek/touch, tilt/ear, extended and retracted) is at least 3.0 dB lower than the SAR limit, testing at the high and low channels is optional for such test configuration(s).
7. WCDMA mode was tested under RMC 12.2 kbps with HSPA Inactive per KDB Publication 941225 D01.
8. All samples tested were electrically identical per the applicant.

© 2011 PCTEST Engineering Laboratory, Inc.

Table 15-5
2.4 GHz WLAN Head SAR Results

MEASUREMENT RESULTS										
FREQUENCY		Mode	Service	Conducted Power [dBm]	Power Drift [dB]	Side	Test Position	Serial Number	Data Rate (Mbps)	SAR (1g)
MHz	Ch.									(W/kg)
2462	11	IEEE 802.11b	DSSS	16.71	0.09	Right	Touch	FI-195-B	1	0.011
2462	11	IEEE 802.11b	DSSS	16.71	0.05	Right	Tilt	FI-195-B	1	0.004
2462	11	IEEE 802.11b	DSSS	16.71	0.09	Left	Touch	FI-195-B	1	0.028
2462	11	IEEE 802.11b	DSSS	16.71	0.05	Left	Tilt	FI-195-B	1	0.005
ANSI / IEEE C95.1 1992 - SAFETY LIMIT Spatial Peak Uncontrolled Exposure/General Population						**Head 1.6 W/kg (mW/g)** averaged over 1 gram				

Notes:

1. The test data reported are the worst-case SAR value with the position set in a typical configuration. Test procedures used were according to FCC/OET Bulletin 65, Supplement C [June 2001].
2. All modes of operation were investigated, and worst-case results are reported.
3. Batteries are fully charged for all readings. Standard battery was used.
4. Tissue parameters and temperatures are listed on the SAR plots.
5. Liquid tissue depth was at least 15.0 cm.
6. Justification for reduced test configurations for WIFI channels per KDB Publication 248227 and April 2010 FCC/TCB Meeting Notes: Highest average RF output power channel for the lowest data rate were selected for SAR evaluation. IEEE 802.11g/n modes were not investigated since the average output powers were not greater than 0.25 dB than that of the corresponding channel in the lowest data rate IEEE 802.11b mode.
7. WLAN transmission was verified using a spectrum analyzer.
8. All samples tested were electrically identical per the applicant.

© 2011 PCTEST Engineering Laboratory, Inc.

Table 15-6
5.2 GHz WLAN Head SAR Results

MEASUREMENT RESULTS										
FREQUENCY		Mode	Service	Conducted Power [dBm]	Power Drift [dB]	Side	Test Position	Serial Number	Data Rate (Mbps)	SAR (1g)
MHz	Ch.									(W/kg)
5200	40	IEEE 802.11a	OFDM	13.46	0.05	Right	Touch	FI-195-A	6	0.017
5200	40	IEEE 802.11a	OFDM	13.46	-0.10	Right	Tilt	FI-195-A	6	0.021
5200	40	IEEE 802.11a	OFDM	13.46	0.09	Left	Touch	FI-195-A	6	0.015
5200	40	IEEE 802.11a	OFDM	13.46	0.05	Left	Tilt	FI-195-A	6	0.000
ANSI / IEEE C95.1 1992 - SAFETY LIMIT Spatial Peak Uncontrolled Exposure/General Population						**Head 1.6 W/kg (mW/g)** averaged over 1 gram				

Notes:

1. The test data reported are the worst-case SAR value with the position set in a typical configuration. Test procedures used were according to FCC/OET Bulletin 65, Supplement C [June 2001].
2. All modes of operation were investigated, and worst-case results are reported.
3. Batteries are fully charged for all readings. Standard battery was used.
4. Tissue parameters and temperatures are listed on the SAR plots.
5. Liquid tissue depth was at least 15.0 cm.
6. Justification for reduced test configurations for WIFI channels per KDB Publication 248227 and April 2010 FCC/TCB Meeting Notes: Highest average RF output power channel for the lowest data rate were selected for SAR evaluation. IEEE 802.11n mode was not investigated since the average output powers were not greater than 0.25 dB than that of the corresponding channel in the lowest data rate IEEE 802.11a mode.
7. WLAN transmission was verified using a spectrum analyzer.
8. All samples tested were electrically identical per the applicant.
9. To confirm the proper SAR liquid depth for 5 GHz Head tests, the z-axis plots from the system verification performed with the same liquid that was tested for 5 GHz head SAR tests were included to confirm the liquid depth, since the measured SAR was low and could not be used to determine this requirement.

© 2011 PCTEST Engineering Laboratory, Inc.

Table 15-7
5.3 GHz WLAN Head SAR Results

MEASUREMENT RESULTS										
FREQUENCY		Mode	Service	Conducted Power [dBm]	Power Drift [dB]	Side	Test Position	Serial Number	Data Rate (Mbps)	SAR (1g)
MHz	Ch.									(W/kg)
5280	56	IEEE 802.11a	OFDM	13.29	0.08	Right	Touch	FI-195-A	6	0.000
5280	56	IEEE 802.11a	OFDM	13.29	-0.09	Right	Tilt	FI-195-A	6	0.000
5280	56	IEEE 802.11a	OFDM	13.29	0.06	Left	Touch	FI-195-A	6	0.008
5280	56	IEEE 802.11a	OFDM	13.29	0.08	Left	Tilt	FI-195-A	6	0.000
ANSI / IEEE C95.1 1992 - SAFETY LIMIT Spatial Peak Uncontrolled Exposure/General Population						**Head 1.6 W/kg (mW/g)** averaged over 1 gram				

Notes:

1. The test data reported are the worst-case SAR value with the position set in a typical configuration. Test procedures used were according to FCC/OET Bulletin 65, Supplement C [June 2001].
2. All modes of operation were investigated, and worst-case results are reported.
3. Batteries are fully charged for all readings. Standard battery was used.
4. Tissue parameters and temperatures are listed on the SAR plots.
5. Liquid tissue depth was at least 15.0 cm.
6. Justification for reduced test configurations for WIFI channels per KDB Publication 248227 and April 2010 FCC/TCB Meeting Notes: Highest average RF output power channel for the lowest data rate were selected for SAR evaluation. IEEE 802.11n mode was not investigated since the average output powers were not greater than 0.25 dB than that of the corresponding channel in the lowest data rate IEEE 802.11a mode.
7. WLAN transmission was verified using a spectrum analyzer.
8. All samples tested were electrically identical per the applicant.
9. To confirm the proper SAR liquid depth for 5 GHz Head tests, the z-axis plots from the system verification performed with the same liquid that was tested for 5 GHz head SAR tests were included to confirm the liquid depth, since the measured SAR was low and could not be used to determine this requirement.

© 2011 PCTEST Engineering Laboratory, Inc.

Table 15-8
5.5 GHz WLAN Head SAR Results

MEASUREMENT RESULTS										
FREQUENCY		Mode	Service	Conducted Power [dBm]	Power Drift [dB]	Side	Test Position	Serial Number	Data Rate (Mbps)	SAR (1g)
MHz	Ch.									(W/kg)
5500	100	IEEE 802.11a	OFDM	13.19	-0.07	Right	Touch	FI-195-A	6	0.016
5500	100	IEEE 802.11a	OFDM	13.19	-0.10	Right	Tilt	FI-195-A	6	0.000
5500	100	IEEE 802.11a	OFDM	13.19	0.07	Left	Touch	FI-195-A	6	0.002
5500	100	IEEE 802.11a	OFDM	13.19	0.08	Left	Tilt	FI-195-A	6	0.000
ANSI / IEEE C95.1 1992 - SAFETY LIMIT Spatial Peak Uncontrolled Exposure/General Population						**Head 1.6 W/kg (mW/g)** averaged over 1 gram				

Notes:

1. The test data reported are the worst-case SAR value with the position set in a typical configuration. Test procedures used were according to FCC/OET Bulletin 65, Supplement C [June 2001].
2. All modes of operation were investigated, and worst-case results are reported.
3. Batteries are fully charged for all readings. Standard battery was used.
4. Tissue parameters and temperatures are listed on the SAR plots.
5. Liquid tissue depth was at least 15.0 cm.
6. Justification for reduced test configurations for WIFI channels per KDB Publication 248227 and April 2010 FCC/TCB Meeting Notes: Highest average RF output power channel for the lowest data rate were selected for SAR evaluation. IEEE 802.11n mode was not investigated since the average output powers were not greater than 0.25 dB than that of the corresponding channel in the lowest data rate IEEE 802.11a mode.
7. WLAN transmission was verified using a spectrum analyzer.
8. All samples tested were electrically identical per the applicant.
9. To confirm the proper SAR liquid depth for 5 GHz Head tests, the z-axis plots from the system verification performed with the same liquid that was tested for 5 GHz head SAR tests were included to confirm the liquid depth, since the measured SAR was low and could not be used to determine this requirement.

© 2011 PCTEST Engineering Laboratory, Inc.

Table 15-9
5.8 GHz WLAN Head SAR Results

MEASUREMENT RESULTS										
FREQUENCY		Mode	Service	Conducted Power [dBm]	Power Drift [dB]	Side	Test Position	Serial Number	Data Rate (Mbps)	SAR (1g)
MHz	Ch.									(W/kg)
5785	157	IEEE 802.11a	OFDM	13.47	-0.10	Right	Touch	FI-195-A	6	0.002
5785	157	IEEE 802.11a	OFDM	13.47	0.10	Right	Tilt	FI-195-A	6	0.000
5785	157	IEEE 802.11a	OFDM	13.47	-0.07	Left	Touch	FI-195-A	6	0.002
5785	157	IEEE 802.11a	OFDM	13.47	0.08	Left	Tilt	FI-195-A	6	0.001
ANSI / IEEE C95.1 1992 - SAFETY LIMIT Spatial Peak Uncontrolled Exposure/General Population						**Head 1.6 W/kg (mW/g)** averaged over 1 gram				

Notes:

1. The test data reported are the worst-case SAR value with the position set in a typical configuration. Test procedures used were according to FCC/OET Bulletin 65, Supplement C [June 2001].
2. All modes of operation were investigated, and worst-case results are reported.
3. Batteries are fully charged for all readings. Standard battery was used.
4. Tissue parameters and temperatures are listed on the SAR plots.
5. Liquid tissue depth was at least 15.0 cm.
6. Justification for reduced test configurations for WIFI channels per KDB Publication 248227 and April 2010 FCC/TCB Meeting Notes: Highest average RF output power channel for the lowest data rate were selected for SAR evaluation. IEEE 802.11n mode was not investigated since the average output powers were not greater than 0.25 dB than that of the corresponding channel in the lowest data rate IEEE 802.11a mode.
7. WLAN transmission was verified using a spectrum analyzer.
8. All samples tested were electrically identical per the applicant.
9. To confirm the proper SAR liquid depth for 5 GHz Head tests, the z-axis plots from the system verification performed with the same liquid that was tested for 5 GHz head SAR tests were included to confirm the liquid depth, since the measured SAR was low and could not be used to determine this requirement.

© 2011 PCTEST Engineering Laboratory, Inc.

Table 15-10
GSM/WCDMA Body-Worn SAR Results

MEASUREMENT RESULTS									
FREQUENCY		Mode	Service	Conducted Power [dBm]	Power Drift [dB]	Spacing	Serial Number	Side	SAR (1g)
MHz	Ch.								(W/kg)
836.60	190	GSM 850	GSM	32.42	0.09	1.0 cm	FI-195-A	back	0.447
1880.00	661	GSM 1900	GSM	30.04	-0.01	1.0 cm	FI-195-A	back	0.271
836.60	4183	WCDMA 850	RMC	23.21	0.01	1.0 cm	FI-195-A	back	0.553
1880.00	9400	WCDMA 1900	RMC	23.37	-0.01	1.0 cm	FI-195-A	back	0.705
ANSI / IEEE C95.1 1992 - SAFETY LIMIT Spatial Peak Uncontrolled Exposure/General Population						**Body 1.6 W/kg (mW/g)** averaged over 1 gram			

Notes:

1. The test data reported are the worst-case SAR value with the position set in a typical configuration. Test procedures used were according to FCC/OET Bulletin 65, Supplement C [June 2001].
2. All modes of operation were investigated, and worst-case results are reported.
3. Tissue parameters and temperatures are listed on the SAR plots.
4. Batteries are fully charged for all readings. Standard battery was used.
5. Liquid tissue depth was at least 15.0 cm.
6. WCDMA mode in Body SAR was tested under RMC 12.2 kbps with HSPA Inactive per KDB Publication 941225 D01. HSPA SAR was not required since the average output power of the HSPA subtests was not more than 0.25 dB higher than the RMC level and SAR was less than 1.2 W/kg.
7. Justification for reduced test configurations: Per FCC/OET Bulletin 65 Supplement C (June 2001) and Public Notice DA-02-1438, if the SAR measured at the middle channel for each test configuration is at least 3.0 dB lower than the SAR limit, testing at the high and low channels is optional for such test configuration(s).
8. All samples tested were electrically identical per the applicant.
9. Device was tested using a fixed spacing; a separation distance of 10 mm is chosen because Grantee has determined that it supports the types of body-worn accessories available in the marketplace to users for this handset.
10. Body-Worn accessory testing is typically associated with voice operations. Therefore body-worn SAR testing was performed in GSM voice mode only. GPRS Data mode is covered in the Hotspot SAR Testing at the same test distance.

© 2011 PCTEST Engineering Laboratory, Inc.

Table 15-11
2.4 GHz Body-Worn SAR Results

MEASUREMENT RESULTS										
FREQUENCY		Mode	Service	Conducted Power [dBm]	Power Drift [dB]	Spacing	Serial Number	Data Rate (Mbps)	Side	SAR (1g)
MHz	Ch.									(W/kg)
2462	11	IEEE 802.11b	DSSS	16.71	0.08	1.0 cm	FI-195-C	1	back	0.044
ANSI / IEEE C95.1 1992 - SAFETY LIMIT Spatial Peak Uncontrolled Exposure/General Population						Body 1.6 W/kg (mW/g) averaged over 1 gram				

Notes:

1. The test data reported are the worst-case SAR value with the position set in a typical configuration. Test procedures used were according to FCC/OET Bulletin 65, Supplement C [June 2001].
2. All modes of operation were investigated, and worst-case results are reported.
3. Batteries are fully charged for all readings. Standard battery was used.
4. Tissue parameters and temperatures are listed on the SAR plots.
5. Liquid tissue depth is was at least 15.0 cm.
6. Justification for reduced test configurations for WIFI channels per KDB Publication 248227 and April 2010 FCC/TCB Meeting Notes: Highest average RF output power channel for the lowest data rate were selected for SAR evaluation. IEEE 802.11g/n modes were not investigated since the average output powers were not greater than 0.25 dB than that of the corresponding channel in the lowest data rate IEEE 802.11b mode.
7. WLAN transmission was verified using a spectrum analyzer.
8. All samples tested were electrically identical per the applicant.
9. Device was tested using a fixed spacing; a separation distance of 10 mm is chosen because Grantee has determined that it supports the types of body-worn accessories available in the marketplace to users for this handset.

© 2011 PCTEST Engineering Laboratory, Inc.

Table 15-12
5 GHz Body-Worn SAR Results

MEASUREMENT RESULTS										
FREQUENCY		Mode	Service	Conducted Power [dBm]	Power Drift [dB]	Spacing	Serial Number	Data Rate (Mbps)	Side	SAR (1g)
MHz	Ch.									(W/kg)
5200	40	IEEE 802.11a	OFDM	13.46	0.05	1.0 cm	FI-195-A	6	back	0.080
5280	56	IEEE 802.11a	OFDM	13.29	0.10	1.0 cm	FI-195-A	6	back	0.080
5500	100	IEEE 802.11a	OFDM	13.19	0.05	1.0 cm	FI-195-A	6	back	0.116
5785	157	IEEE 802.11a	OFDM	13.47	0.07	1.0 cm	FI-195-A	6	back	0.044
ANSI / IEEE C95.1 1992 - SAFETY LIMIT Spatial Peak Uncontrolled Exposure/General Population						**Body 1.6 W/kg (mW/g)** averaged over 1 gram				

Notes:

1. The test data reported are the worst-case SAR value with the position set in a typical configuration. Test procedures used were according to FCC/OET Bulletin 65, Supplement C [June 2001].
2. All modes of operation were investigated, and worst-case results are reported.
3. Batteries are fully charged for all readings. Standard battery was used.
4. Tissue parameters and temperatures are listed on the SAR plots.
5. Liquid tissue depth is was at least 15.0 cm.
6. Justification for reduced test configurations for WIFI channels per KDB Publication 248227 and April 2010 FCC/TCB Meeting Notes: Highest average RF output power channel for the lowest data rate were selected for SAR evaluation. IEEE 802.11n mode was not investigated since the average output powers were not greater than 0.25 dB than that of the corresponding channel in the lowest data rate IEEE 802.11a mode.
7. WLAN transmission was verified using a spectrum analyzer.
8. All samples tested were electrically identical per the applicant.
9. Device was tested using a fixed spacing; a separation distance of 10 mm is chosen because Grantee has determined that it supports the types of body-worn accessories available in the marketplace to users for this handset.

© 2011 PCTEST Engineering Laboratory, Inc.

Table 15-13
GPRS Hotspot SAR Results

MEASUREMENT RESULTS										
FREQUENCY		Mode	Service	Conducted Power [dBm]	Power Drift [dB]	Spacing	Serial Number	# of GPRS Slots	Side	SAR (1g)
MHz	Ch.									(W/kg)
824.20	128	GSM 850	GPRS	32.00	0.00	1.0 cm	FI-195-A	2	back	1.110
836.60	190	GSM 850	GPRS	31.99	0.01	1.0 cm	FI-195-A	2	back	1.120
848.80	251	GSM 850	GPRS	31.82	0.01	1.0 cm	FI-195-A	2	back	0.914
836.60	190	GSM 850	GPRS	31.99	-0.08	1.0 cm	FI-195-A	2	front	0.719
836.60	190	GSM 850	GPRS	31.99	-0.09	1.0 cm	FI-195-A	2	bottom	0.233
836.60	190	GSM 850	GPRS	31.99	-0.07	1.0 cm	FI-195-A	2	right	0.631
836.60	190	GSM 850	GPRS	31.99	-0.09	1.0 cm	FI-195-A	2	left	0.572
1880.00	661	GSM 1900	GPRS	29.70	-0.05	1.0 cm	FI-195-A	2	back	0.618
1880.00	661	GSM 1900	GPRS	29.70	0.00	1.0 cm	FI-195-A	2	front	0.308
1880.00	661	GSM 1900	GPRS	29.70	0.06	1.0 cm	FI-195-A	2	bottom	0.395
1880.00	661	GSM 1900	GPRS	29.70	-0.02	1.0 cm	FI-195-A	2	right	0.132
1880.00	661	GSM 1900	GPRS	29.70	0.04	1.0 cm	FI-195-A	2	left	0.039
ANSI / IEEE C95.1 1992 - SAFETY LIMIT Spatial Peak Uncontrolled Exposure/General Population						**Body 1.6 W/kg (mW/g)** averaged over 1 gram				

Notes:

1. The test data reported are the worst-case SAR value with the position set in a typical configuration. Test procedures used were according to FCC/OET Bulletin 65, Supplement C [June 2001]
2. All modes of operation were investigated, and worst-case results are reported.
3. Tissue parameters and temperatures are listed on the SAR plots.
4. Batteries are fully charged for all readings. Standard battery was used.
5. Liquid tissue depth was at least 15.0 cm.
6. Justification for reduced test configurations per KDB Publication 941225 D03: The source-based time-averaged output power was evaluated for all multi-slot operations. In addition to the worst-case reported, all source-based time-averaged powers within 10% of the worst-case were additionally included in the evaluation.
7. Justification for reduced test configurations: Per FCC/OET Bulletin 65 Supplement C (June 2001) and Public Notice DA-02-1438, if the SAR measured at the middle channel for each test configuration is at least 3.0 dB lower than the SAR limit, testing at the high and low channels is optional for such test configuration(s).
8. All samples tested were electrically identical per the applicant.
9. Top Edge was not tested since the antenna distance from the edge was greater than 2.5 cm per FCC KDB Publication 941225 D06 guidance (see Section 13.4).
10. SAR evaluation requires a single frequency of measurement for valid measurements using the SAR probe and tissue calibrated which are calibrated for specific limited frequency ranges. Therefore, during SAR evaluation it was ensured that the WIFI transmission was disabled by the manufacturer to assess the standalone SAR to be evaluated for SAR. WIFI SAR was separately evaluated to account for the WIFI SAR for portable hotspot exposure conditions (See Section 13).

© 2011 PCTEST Engineering Laboratory, Inc.

Table 15-14
WCDMA Hotspot SAR Results

MEASUREMENT RESULTS									
FREQUENCY		Mode	Service	Conducted Power [dBm]	Power Drift [dB]	Spacing	Serial Number	Side	SAR (1g)
MHz	Ch.								(W/kg)
836.60	4183	WCDMA 850	RMC	23.21	0.01	1.0 cm	FI-195-A	back	0.553
836.60	4183	WCDMA 850	RMC	23.21	0.01	1.0 cm	FI-195-A	front	0.355
836.60	4183	WCDMA 850	RMC	23.21	0.02	1.0 cm	FI-195-A	bottom	0.110
836.60	4183	WCDMA 850	RMC	23.21	-0.04	1.0 cm	FI-195-A	right	0.331
836.60	4183	WCDMA 850	RMC	23.21	-0.05	1.0 cm	FI-195-A	left	0.309
1880.00	9400	WCDMA 1900	RMC	23.37	-0.01	1.0 cm	FI-195-A	back	0.705
1880.00	9400	WCDMA 1900	RMC	23.37	-0.01	1.0 cm	FI-195-A	front	0.325
1880.00	9400	WCDMA 1900	RMC	23.37	0.01	1.0 cm	FI-195-A	bottom	0.473
1880.00	9400	WCDMA 1900	RMC	23.37	-0.01	1.0 cm	FI-195-A	right	0.148
1880.00	9400	WCDMA 1900	RMC	23.37	-0.05	1.0 cm	FI-195-A	left	0.041
ANSI / IEEE C95.1 1992 - SAFETY LIMIT Spatial Peak Uncontrolled Exposure/General Population						**Body 1.6 W/kg (mW/g)** averaged over 1 gram			

Notes:

1. The test data reported are the worst-case SAR value with the position set in a typical configuration. Test procedures used were according to FCC/OET Bulletin 65, Supplement C [June 2001]
2. All modes of operation were investigated, and worst-case results are reported.
3. Tissue parameters and temperatures are listed on the SAR plots.
4. Batteries are fully charged for all readings. Standard battery was used.
5. Liquid tissue depth was at least 15.0 cm.
6. WCDMA mode was tested under RMC 12.2 kbps with HSPA Inactive. WCDMA mode with HSPA active was not required per FCC KDB Publication 941225 D01 since HSPA powers were not more than 0.25 dB higher than RMC powers and SAR was below 1.2 W/kg.
7. Justification for reduced test configurations: Per FCC/OET Bulletin 65 Supplement C (June 2001) and Public Notice DA-02-1438, if the SAR measured at the middle channel for each test configuration is at least 3.0 dB lower than the SAR limit, testing at the high and low channels is optional for such test configuration(s).
8. All samples tested were electrically identical per the applicant.
9. Top Edge was not tested since the antenna distance from the edge was greater than 2.5 cm per FCC KDB Publication 941225 D06 guidance (see Section 13.4).
10. SAR evaluation requires a single frequency of measurement for valid measurements using the SAR probe and tissue calibrated which are calibrated for specific limited frequency ranges. Therefore, during SAR evaluation it was ensured that the WIFI transmission was disabled by the manufacturer to assess the standalone SAR to be evaluated for SAR. WIFI SAR was separately evaluated to account for the WIFI SAR for portable hotspot exposure conditions (See Section 13).

© 2011 PCTEST Engineering Laboratory, Inc.

Table 15-15
Hotspot 2.4 GHz Body SAR Results

MEASUREMENT RESULTS										
FREQUENCY		Mode	Service	Conducted Power [dBm]	Power Drift [dB]	Spacing	Serial Number	Data Rate (Mbps)	Side	SAR (1g)
MHz	Ch.									(W/kg)
2462	11	IEEE 802.11b	DSSS	16.71	0.08	1.0 cm	FI-195-C	1	back	0.044
2462	11	IEEE 802.11b	DSSS	16.71	0.07	1.0 cm	FI-195-C	1	front	0.012
2462	11	IEEE 802.11b	DSSS	16.71	0.06	1.0 cm	FI-195-C	1	left	0.031
ANSI / IEEE C95.1 1992 - SAFETY LIMIT Spatial Peak Uncontrolled Exposure/General Population						**Body 1.6 W/kg (mW/g)** averaged over 1 gram				

Notes:

1. The test data reported are the worst-case SAR value with the position set in a typical configuration. Test procedures used were according to FCC/OET Bulletin 65, Supplement C [June 2001].
2. All modes of operation were investigated, and worst-case results are reported.
3. Batteries are fully charged for all readings. Standard battery was used.
4. Tissue parameters and temperatures are listed on the SAR plots.
5. Liquid tissue depth is was at least 15.0 cm.
6. Justification for reduced test configurations for WIFI channels per KDB Publication 248227 and April 2010 FCC/TCB Meeting Notes: Highest average RF output power channel for the lowest data rate were selected for SAR evaluation. IEEE 802.11g/n modes were not investigated since the average output powers were not greater than 0.25 dB than that of the corresponding channel in the lowest data rate IEEE 802.11b mode.
7. WLAN transmission was verified using a spectrum analyzer.
8. All samples tested were electrically identical per the applicant.
9. Top Bottom and right Edges were not tested since the antenna distance from the edge was greater than 2.5 cm per FCC KDB Publication 941225 D06 (see Section 13.4).

© 2011 PCTEST Engineering Laboratory, Inc.

16 FCC MULTI-TX AND ANTENNA SAR CONSIDERATIONS

16.1 Introduction

The following procedures adopted from "FCC SAR Considerations for Cell Phones with Multiple Transmitters" FCC KDB Publication 648474 are applicable to handsets with built-in unlicensed transmitters such as 802.11a/b/g and Bluetooth devices which may simultaneously transmit with the licensed transmitter.

16.2 FCC Power Tables & Conditions

	2.45	5.15 - 5.35	5.47 - 5.85	GHz
P_{Ref}	12	6	5	mW
Device output power should be rounded to the nearest mW to compare with values specified in this table.				

Figure 16-1
Output Power Thresholds for Unlicensed Transmitters

	Individual Transmitter	Simultaneous Transmission
Licensed Transmitters	Routine evaluation required	SAR not required: Unlicensed only ○ when stand-alone 1-g SAR is not required and antenna is ≥ 5 cm from other antennas Licensed & Unlicensed ○ when the sum of the 1-g SAR is < 1.6 W/kg for all simultaneous transmitting antennas ○ when SAR to peak location separation ratio of simultaneous transmitting antenna pair is < 0.3 SAR required: Licensed & Unlicensed antenna pairs with SAR to peak location separation ratio ≥ 0.3; test is only required for the configuration that results in the highest SAR in stand-alone configuration for each wireless mode and exposure condition Note: simultaneous transmission exposure conditions for head and body can be different for different style phones; therefore, different test requirements may apply
Unlicensed Transmitters	When there is no simultaneous transmission – ○ output ≤ 60/f: SAR not required ○ output > 60/f: stand-alone SAR required When there is simultaneous transmission – Stand-alone SAR not required when ○ output ≤ 2·P_{Ref} and antenna is ≥ 5.0 cm from other antennas ○ output ≤ P_{Ref} and antenna is ≥ 2.5 cm from other antennas ○ output ≤ P_{Ref} and antenna is < 2.5 cm from other antennas, each with either output power ≤ P_{Ref} or 1-g SAR < 1.2 W/kg Otherwise stand-alone SAR is required When stand-alone SAR is required ○ test SAR on highest output channel for each wireless mode and exposure condition ○ if SAR for highest output channel is > 50% of SAR limit, evaluate all channels according to normal procedures	

Figure 16-2
SAR Evaluation Requirements for Multiple Transmitter Handsets

16.3 Multiple Antenna/Transmission Information

The separation between the main antenna and the Bluetooth and WLAN antennas is 53.5 mm.
RF Conducted Power of Bluetooth Tx is 7.447 mW. RF Conducted Power of WLAN is 46.881 mW.

16.4 Simultaneous Transmission Analysis

Based on the output power, antenna separation distance and the Body SAR of the dominant transmitter, a stand-alone Bluetooth SAR test is not required while for WLAN it is required.

© 2011 PCTEST Engineering Laboratory, Inc.

Table 16-1
Simultaneous Transmission Scenario 2.4 GHz WLAN (Held to Ear)

Simult Tx	Configuration	GSM 850 SAR (W/kg)	2.4 GHz WIFI SAR (W/kg)	Σ SAR (W/kg)	Simult Tx	Configuration	GSM 1900 SAR (W/kg)	2.4 GHz WIFI SAR (W/kg)	Σ SAR (W/kg)
Head SAR	Right Cheek	0.282	0.011	**0.293**	Head SAR	Right Cheek	0.328	0.011	**0.339**
	Right Tilt	0.197	0.004	**0.201**		Right Tilt	0.076	0.004	**0.080**
	Left Cheek	0.271	0.028	**0.299**		Left Cheek	0.141	0.028	**0.169**
	Left Tilt	0.177	0.005	**0.182**		Left Tilt	0.071	0.005	**0.076**
Simult Tx	Configuration	WCDMA 850 SAR (W/kg)	2.4 GHz WIFI SAR (W/kg)	Σ SAR (W/kg)	Simult Tx	Configuration	WCDMA 1900 SAR (W/kg)	2.4 GHz WIFI SAR (W/kg)	Σ SAR (W/kg)
Head SAR	Right Cheek	0.311	0.011	**0.322**	Head SAR	Right Cheek	0.334	0.011	**0.345**
	Right Tilt	0.187	0.004	**0.191**		Right Tilt	0.082	0.004	**0.086**
	Left Cheek	0.269	0.028	**0.297**		Left Cheek	0.166	0.028	**0.194**
	Left Tilt	0.173	0.005	**0.178**		Left Tilt	0.107	0.005	**0.112**

The above tables represent the held-to-ear simultaneous transmission scenario of 2G/3G Voice and 2.4 GHz WLAN data.

Table 16-2
Simultaneous Transmission Scenario 2.4 GHz WLAN (Body-Worn)

Configuration	Mode	2G/3G SAR (W/kg)	2.4 GHz WIFI SAR (W/kg)	Σ SAR (W/kg)
Back Side	GSM 850	0.447	0.044	**0.491**
Back Side	GSM 1900	0.271	0.044	**0.315**
Back Side	WCDMA 850	0.553	0.044	**0.597**
Back Side	WCDMA 1900	0.705	0.044	**0.749**

The above tables represent the body-worn simultaneous transmission scenario of 2G/3G Voice and 2.4 GHz WLAN data at 1.0 cm.

Table 16-3
Simultaneous Transmission Scenario 2.4 GHz WLAN (Hotspot)

Simult Tx	Configuration	GPRS 850 SAR (W/kg)	2.4 GHz WIFI SAR (W/kg)	Σ SAR (W/kg)	Simult Tx	Configuration	GPRS 1900 SAR (W/kg)	2.4 GHz WIFI SAR (W/kg)	Σ SAR (W/kg)
Body SAR	Back	1.120	0.044	**1.164**	Body SAR	Back	0.618	0.044	**0.662**
	Front	0.719	0.012	**0.731**		Front	0.308	0.012	**0.320**
	Top	-	-	**0.000**		Top	-	-	**0.000**
	Bottom	0.233	-	**0.233**		Bottom	0.395	-	**0.395**
	Right	0.631	-	**0.631**		Right	0.132	-	**0.132**
	Left	0.572	0.031	**0.603**		Left	0.039	0.031	**0.070**
Simult Tx	Configuration	WCDMA 850 SAR (W/kg)	2.4 GHz WIFI SAR (W/kg)	Σ SAR (W/kg)	Simult Tx	Configuration	WCDMA 1900 SAR (W/kg)	2.4 GHz WIFI SAR (W/kg)	Σ SAR (W/kg)
Body SAR	Back	0.553	0.044	**0.597**	Body SAR	Back	0.705	0.044	**0.749**
	Front	0.355	0.012	**0.367**		Front	0.325	0.012	**0.337**
	Top	-	-	**0.000**		Top	-	-	**0.000**
	Bottom	0.110	-	**0.110**		Bottom	0.473	-	**0.473**
	Right	0.331	-	**0.331**		Right	0.148	-	**0.148**
	Left	0.309	0.031	**0.340**		Left	0.041	0.031	**0.072**

The above tables represent the body simultaneous transmission scenario of 2G/3G Data with 2.4 GHz WIFI Hotspot at 1.0 cm.

Note: Per FCC KDB Publication 941225 D06, the edges with antennas more than 2.5 cm are not required to be evaluated for SAR ("-").

© 2011 PCTEST Engineering Laboratory, Inc.

Table 16-4
Simultaneous Transmission Scenario 5 GHz WLAN (Held to Ear)

Simult Tx	Configuration	GSM 850 SAR (W/kg)	5 GHz WIFI SAR (W/kg)	Σ SAR (W/kg)	Simult Tx	Configuration	GSM 1900 SAR (W/kg)	5 GHz WIFI SAR (W/kg)	Σ SAR (W/kg)
Head SAR	Right Cheek	0.282	0.017	**0.299**	Head SAR	Right Cheek	0.328	0.017	**0.345**
	Right Tilt	0.197	0.021	**0.218**		Right Tilt	0.076	0.021	**0.097**
	Left Cheek	0.271	0.015	**0.286**		Left Cheek	0.141	0.015	**0.156**
	Left Tilt	0.177	0.001	**0.178**		Left Tilt	0.071	0.001	**0.072**
Simult Tx	Configuration	WCDMA 850 SAR (W/kg)	5 GHz WIFI SAR (W/kg)	Σ SAR (W/kg)	Simult Tx	Configuration	WCDMA 1900 SAR (W/kg)	5 GHz WIFI SAR (W/kg)	Σ SAR (W/kg)
Head SAR	Right Cheek	0.311	0.017	**0.328**	Head SAR	Right Cheek	0.334	0.017	**0.351**
	Right Tilt	0.187	0.021	**0.208**		Right Tilt	0.082	0.021	**0.103**
	Left Cheek	0.269	0.015	**0.284**		Left Cheek	0.166	0.015	**0.181**
	Left Tilt	0.173	0.001	**0.174**		Left Tilt	0.107	0.001	**0.108**

The above tables represent the held-to-ear simultaneous transmission scenario of 2G/3G Voice and 5 GHz WLAN data.

Table 16-5
Simultaneous Transmission Scenario 5 GHz WLAN (Body-Worn)

Configuration	Mode	2G/3G SAR (W/kg)	5 GHz WIFI SAR (W/kg)	Σ SAR (W/kg)
Back Side	GPRS 850	0.447	0.116	**0.563**
Back Side	GPRS 1900	0.271	0.116	**0.387**
Back Side	WCDMA 850	0.553	0.116	**0.669**
Back Side	WCDMA 1900	0.705	0.116	**0.821**

The above tables represent the body-worn simultaneous transmission scenario of 2G/3G Voice and 5 GHz WLAN data at 1.0 cm.

16.5 Simultaneous Transmission Conclusion

The above numerical summed SAR was below the SAR limit. Therefore, the above analysis is sufficient to determine that simultaneous transmission cases will not exceed the SAR limit, and no volumetric SAR summation is required per FCC KDB Publication 648474.

© 2011 PCTEST Engineering Laboratory, Inc.

17 EQUIPMENT LIST

Manufacturer	Model	Description	Cal Date	Cal Interval	Cal Due	Serial Number
Agilent	85070B	Dielectric Probe Kit	8/22/2010	Annual	8/22/2011	US33020316
Agilent	8648D	(9kHz-4GHz) Signal Generator	10/13/2010	Annual	10/13/2011	3613A00315
Agilent	8753E	(30kHz-6GHz) Network Analyzer	4/21/2011	Annual	4/21/2012	JP38020182
Agilent	E5515C	Wireless Communications Test Set	10/11/2010	Annual	10/11/2011	GB46110872
Agilent	E5515C	Wireless Communications Test Set	10/8/2010	Annual	10/8/2011	GB46310798
Agilent	E5515C	Wireless Communications Test Set	7/6/2011	Annual	7/6/2012	GB41450275
Agilent	E8257D	(250kHz-20GHz) Signal Generator	4/8/2011	Annual	4/8/2012	MY45470194
Gigatronics	80701A	(0.05-18GHz) Power Sensor	10/11/2010	Annual	10/11/2011	1833460
Gigatronics	8651A	Universal Power Meter	10/11/2010	Annual	10/11/2011	8650319
Rohde & Schwarz	CMU200	Base Station Simulator	11/11/2010	Annual	11/11/2011	836371/0079
Rohde & Schwarz	CMU200	Base Station Simulator	6/1/2011	Annual	6/1/2012	833855/0010
Rohde & Schwarz	CMU200	Base Station Simulator	4/19/2011	Annual	4/19/2012	107826
Rohde & Schwarz	NRVD	Dual Channel Power Meter	4/8/2011	Biennial	4/8/2013	101695
SPEAG	D1765V2	1765 MHz SAR Dipole	6/16/2011	Annual	6/16/2012	1008
SPEAG	D1900V2	1900 MHz SAR Dipole	2/17/2011	Annual	2/17/2012	502
SPEAG	D1900V2	1900 MHz SAR Dipole	8/18/2009	Biennial	8/18/2011	5d080
SPEAG	D2450V2	2450 MHz SAR Dipole	8/27/2009	Biennial	8/27/2011	719
SPEAG	D2450V2	2450 MHz SAR Dipole	2/8/2011	Annual	2/8/2012	797
SPEAG	D2600V2	2600 MHz SAR Dipole	4/15/2011	Annual	4/15/2012	1004
SPEAG	D5GHzV2	5 GHz SAR Dipole	8/19/2009	Biennial	8/19/2011	1007
SPEAG	D5GHzV2	5 GHz SAR Dipole	2/11/2011	Annual	2/11/2012	1057
SPEAG	D835V2	835 MHz SAR Dipole	2/9/2011	Annual	2/9/2012	4d047
SPEAG	D835V2	835 MHz SAR Dipole	8/24/2009	Biennial	8/24/2011	4d026
SPEAG	DAE3	Dasy Data Acquisition Electronics	11/18/2010	Annual	11/18/2011	455
SPEAG	DAE4	Dasy Data Acquisition Electronics	3/17/2011	Annual	3/17/2012	704
SPEAG	DAE4	Dasy Data Acquisition Electronics	4/20/2011	Annual	4/20/2012	665
SPEAG	DAE4	Dasy Data Acquisition Electronics	2/21/2011	Annual	2/21/2012	649
SPEAG	ES3DV2	SAR Probe	9/21/2010	Annual	9/21/2011	3022
SPEAG	EX3DV4	SAR Probe	8/19/2010	Annual	8/19/2011	3561
SPEAG	EX3DV4	SAR Probe	2/14/2011	Annual	2/14/2012	3550
SPEAG	DAE4	Dasy Data Acquisition Electronics	5/19/2011	Annual	5/19/2012	859
SPEAG	D750V3	750 MHz Dipole	2/14/2011	Annual	2/14/2012	1003
SPEAG	ES3DV3	SAR Probe	3/24/2011	Annual	3/24/2012	3213
SPEAG	ES3DV3	SAR Probe	4/18/2011	Annual	4/18/2012	3209
Rohde & Schwarz	SMIQ03B	Signal Generator	4/6/2011	Annual	4/6/2012	DE27259
SPEAG	D1640V2	1640 MHz Dipole	8/17/2010	Annual	8/17/2011	321
Rohde & Schwarz	CMW500	LTE Radio Communication Tester	8/30/2010	Annual	8/30/2011	100976
Anritsu	MA2481A	Power Sensor	2/7/2011	Annual	2/7/2012	5318
Anritsu	MA2481A	Power Sensor	2/7/2011	Annual	2/7/2012	5442
Anritsu	ML2438A	Power Meter	2/7/2011	Annual	2/7/2012	1190013
Anritsu	ML2438A	Power Meter	2/7/2011	Annual	2/7/2012	98150041
Agilent	8648D	Signal Generator	4/5/2011	Annual	4/5/2012	3629U00687
Anritsu	ML2438A	Power Meter	2/7/2011	Annual	2/7/2012	1070030
Anritsu	MA2481A	Power Sensor	2/7/2011	Annual	2/7/2012	5821
Anritsu	MA2481A	Power Sensor	2/7/2011	Annual	2/7/2012	8013
Anritsu	MA2481A	Power Sensor	2/7/2011	Annual	2/7/2012	5605
Anritsu	MA2481A	Power Sensor	2/7/2011	Annual	2/7/2012	2400
Agilent	E5515C	Wireless Communications Test Set	7/6/2011	Annual	7/6/2012	GB43304447
Agilent	E5515C	Wireless Communications Tester	4/21/2011	Annual	4/21/2012	US41140256
Amplifier Research	5S1G4	5W, 800MHz-4.2GHz	N/A			21910
Mini-Circuits	BW-N20W5+	DC to 18 GHz Precision Fixed 20 dB Attenuator	N/A			N/A
Agilent	E5515C	Wireless Communications Test Set	2/8/2011	Annual	2/8/2012	GB45360985
SPEAG	D3700V2	3700 MHz SAR Dipole	2/16/2011	Annual	2/16/2012	1002
Rohde & Schwarz	CMW500	LTE Radio Communication Tester	3/11/2011	Annual	3/11/2012	103962
Control Company	61220-416	Long-Stem Thermometer	2/15/2011	Biennial	2/15/2013	111331322
Control Company	61220-416	Long-Stem Thermometer	2/15/2011	Biennial	2/15/2013	111331323
Control Company	61220-416	Long-Stem Thermometer	2/15/2011	Biennial	2/15/2013	111331330
Control Company	61220-416	Long-Stem Thermometer	2/15/2011	Biennial	2/15/2013	111331332
Control Company	61220-416	Long-Stem Thermometer	3/16/2011	Biennial	3/16/2013	111391601
SPEAG	ES3DV3	SAR Probe	4/8/2011	Annual	4/8/2012	3258
SPEAG	D1750V2	1750 MHz SAR Dipole	5/24/2011	Annual	5/24/2012	1051
MiniCircuits	SLP-2400+	Low Pass Filter	N/A			R8979500903
Narda	4772-3	Attenuator (3dB)	N/A			9406
Narda	BW-S3W2	Attenuator (3dB)	N/A			120
Rohde & Schwarz	CMW500	LTE Radio Communication Tester	8/5/2011	Annual	8/5/2012	112347

© 2011 PCTEST Engineering Laboratory, Inc.

18 MEASUREMENT UNCERTAINTIES

Applicable for 750 – 3000 MHz.

a	b	c	d	e= f(d,k)	f	g	h = c x f/e	i = c x g/e	k
Uncertainty Component	**IEEE 1528 Sec.**	**Tol. (± %)**	**Prob. Dist.**	**Div.**	**c_i 1gm**	**c_i 10 gms**	**1gm u_i (± %)**	**10gms u_i (± %)**	**v_i**
Measurement System									
Probe Calibration	E.2.1	6.0	N	1	1.0	1.0	6.0	6.0	∞
Axial Isotropy	E.2.2	0.25	N	1	0.7	0.7	0.2	0.2	∞
Hemishperical Isotropy	E.2.2	1.3	N	1	1.0	1.0	1.3	1.3	∞
Boundary Effect	E.2.3	0.4	N	1	1.0	1.0	0.4	0.4	∞
Linearity	E.2.4	0.3	N	1	1.0	1.0	0.3	0.3	∞
System Detection Limits	E.2.5	5.1	N	1	1.0	1.0	5.1	5.1	∞
Readout Electronics	E.2.6	1.0	N	1	1.0	1.0	1.0	1.0	∞
Response Time	E.2.7	0.8	R	1.73	1.0	1.0	0.5	0.5	∞
Integration Time	E.2.8	2.6	R	1.73	1.0	1.0	1.5	1.5	∞
RF Ambient Conditions	E.6.1	3.0	R	1.73	1.0	1.0	1.7	1.7	∞
Probe Positioner Mechanical Tolerance	E.6.2	0.4	R	1.73	1.0	1.0	0.2	0.2	∞
Probe Positioning w/ respect to Phantom	E.6.3	2.9	R	1.73	1.0	1.0	1.7	1.7	∞
Extrapolation, Interpolation & Integration algorithms for Max. SAR Evaluation	E.5	1.0	R	1.73	1.0	1.0	0.6	0.6	∞
Test Sample Related									
Test Sample Positioning	E.4.2	6.0	N	1	1.0	1.0	6.0	6.0	287
Device Holder Uncertainty	E.4.1	3.32	R	1.73	1.0	1.0	1.9	1.9	∞
Output Power Variation - SAR drift measurement	6.6.2	5.0	R	1.73	1.0	1.0	2.9	2.9	∞
Phantom & Tissue Parameters									
Phantom Uncertainty (Shape & Thickness tolerances)	E.3.1	4.0	R	1.73	1.0	1.0	2.3	2.3	∞
Liquid Conductivity - deviation from target values	E.3.2	5.0	R	1.73	0.64	0.43	1.8	1.2	∞
Liquid Conductivity - measurement uncertainty	E.3.3	3.8	N	1	0.64	0.43	2.4	1.6	6
Liquid Permittivity - deviation from target values	E.3.2	5.0	R	1.73	0.60	0.49	1.7	1.4	∞
Liquid Permittivity - measurement uncertainty	E.3.3	4.5	N	1	0.60	0.49	2.7	2.2	6
Combined Standard Uncertainty (k=1)			RSS				12.1	11.7	299
Expanded Uncertainty (95% CONFIDENCE LEVEL)			k=2				24.2	23.5	

The above measurement uncertainties are according to IEEE Std. 1528-2003

© 2011 PCTEST Engineering Laboratory, Inc.

Applicable for 5 GHz:

a	b	c	d	e= f(d,k)	f	g	h = c x f/e	i = c x g/e	k
Uncertainty Component	**IEEE 1528 Sec.**	**Tol. (± %)**	**Prob. Dist.**	**Div.**	**c_i 1gm**	**c_i 10 gms**	**1gm u_i (± %)**	**10gms u_i (± %)**	**v_i**
Measurement System									
Probe Calibration	E.2.1	6.55	N	1	1.0	1.0	6.55	6.55	∞
Axial Isotropy	E.2.2	0.25	N	1	0.7	0.7	0.2	0.2	∞
Hemishperical Isotropy	E.2.2	1.3	N	1	1.0	1.0	1.3	1.3	∞
Boundary Effect	E.2.3	0.4	N	1	1.0	1.0	0.4	0.4	∞
Linearity	E.2.4	0.3	N	1	1.0	1.0	0.3	0.3	∞
System Detection Limits	E.2.5	5.1	N	1	1.0	1.0	5.1	5.1	∞
Readout Electronics	E.2.6	1.0	N	1	1.0	1.0	1.0	1.0	∞
Response Time	E.2.7	0.8	R	1.73	1.0	1.0	0.5	0.5	∞
Integration Time	E.2.8	2.6	R	1.73	1.0	1.0	1.5	1.5	∞
RF Ambient Conditions	E.6.1	3.0	R	1.73	1.0	1.0	1.7	1.7	∞
Probe Positioner Mechanical Tolerance	E.6.2	0.4	R	1.73	1.0	1.0	0.2	0.2	∞
Probe Positioning w/ respect to Phantom	E.6.3	2.9	R	1.73	1.0	1.0	1.7	1.7	∞
Extrapolation, Interpolation & Integration algorithms for Max. SAR Evaluation	E.5	1.0	R	1.73	1.0	1.0	0.6	0.6	∞
Test Sample Related									
Test Sample Positioning	E.4.2	6.0	N	1	1.0	1.0	6.0	6.0	287
Device Holder Uncertainty	E.4.1	3.32	R	1.73	1.0	1.0	1.9	1.9	∞
Output Power Variation - SAR drift measurement	6.6.2	5.0	R	1.73	1.0	1.0	2.9	2.9	∞
Phantom & Tissue Parameters									
Phantom Uncertainty (Shape & Thickness tolerances)	E.3.1	4.0	R	1.73	1.0	1.0	2.3	2.3	∞
Liquid Conductivity - deviation from target values	E.3.2	5.0	R	1.73	0.64	0.43	1.8	1.2	∞
Liquid Conductivity - measurement uncertainty	E.3.3	3.8	N	1	0.64	0.43	2.4	1.6	6
Liquid Permittivity - deviation from target values	E.3.2	5.0	R	1.73	0.60	0.49	1.7	1.4	∞
Liquid Permittivity - measurement uncertainty	E.3.3	4.5	N	1	0.60	0.49	2.7	2.2	6
Combined Standard Uncertainty (k=1)			RSS				12.4	12.0	299
Expanded Uncertainty (95% CONFIDENCE LEVEL)			k=2				24.7	24.0	

The above measurement uncertainties are according to IEEE Std. 1528-2003

© 2011 PCTEST Engineering Laboratory, Inc.

19 CONCLUSION

19.1 Measurement Conclusion

The SAR evaluation indicates that the EUT complies with the RF radiation exposure limits of the FCC and Industry Canada, with respect to all parameters subject to this test. These measurements were taken to simulate the RF effects of RF exposure under worst-case conditions. Precise laboratory measures were taken to assure repeatability of the tests. The results and statements relate only to the item(s) tested.

Please note that the absorption and distribution of electromagnetic energy in the body are very complex phenomena that depend on the mass, shape, and size of the body, the orientation of the body with respect to the field vectors, and the electrical properties of both the body and the environment. Other variables that may play a substantial role in possible biological effects are those that characterize the environment (e.g. ambient temperature, air velocity, relative humidity, and body insulation) and those that characterize the individual (e.g. age, gender, activity level, debilitation, or disease). Because various factors may interact with one another to vary the specific biological outcome of an exposure to electromagnetic fields, any protection guide should consider maximal amplification of biological effects as a result of field-body interactions, environmental conditions, and physiological variables. [3]

© 2011 PCTEST Engineering Laboratory, Inc.

20 REFERENCES

[1] Federal Communications Commission, ET Docket 93-62, Guidelines for Evaluating the Environmental Effects of Radiofrequency Radiation, Aug. 1996.

[2] ANSI/IEEE C95.1-2005, American National Standard safety levels with respect to human exposure to radio frequency electromagnetic fields, 300kHz to 100GHz, New York: IEEE, 2006.

[3] ANSI/IEEE C95.1-1992, American National Standard safety levels with respect to human exposure to radio frequency electromagnetic fields, 300kHz to 100GHz, New York: IEEE, Sept. 1992.

[4] ANSI/IEEE C95.3-2002, IEEE Recommended Practice for the Measurement of Potentially Hazardous Electromagnetic Fields - RF and Microwave, New York: IEEE, December 2002.

[5] Federal Communications Commission, OET Bulletin 65 (Edition 97-01), Supplement C (Edition 01-01), Evaluating Compliance with FCC Guidelines for Human Exposure to Radiofrequency Electromagnetic Fields, June 2001.

[6] IEEE Standards Coordinating Committee 34 – IEEE Std. 1528-2003, Recommended Practice for Determining the Peak Spatial-Average Specific Absorption Rate (SAR) in the Human Body Due to Wireless Communications Devices.

[7] NCRP, National Council on Radiation Protection and Measurements, Biological Effects and Exposure Criteria for RadioFrequency Electromagnetic Fields, NCRP Report No. 86, 1986. Reprinted Feb. 1995.

[8] T. Schmid, O. Egger, N. Kuster, Automated E-field scanning system for dosimetric assessments, IEEE Transaction on Microwave Theory and Techniques, vol. 44, Jan. 1996, pp. 105-113.

[9] K. Pokovic, T. Schmid, N. Kuster, Robust setup for precise calibration of E-field probes in tissue simulating liquids at mobile communications frequencies, ICECOM97, Oct. 1997, pp. 120-124.

[10] K. Pokovic, T. Schmid, and N. Kuster, E-field Probe with improved isotropy in brain simulating liquids, Proceedings of the ELMAR, Zadar, Croatia, June 23-25, 1996, pp. 172-175.

[11] Schmid & Partner Engineering AG, Application Note: Data Storage and Evaluation, June 1998, p2.

[12] V. Hombach, K. Meier, M. Burkhardt, E. Kuhn, N. Kuster, The Dependence of EM Energy Absorption upon Human Head Modeling at 900 MHz, IEEE Transaction on Microwave Theory and Techniques, vol. 44 no. 10, Oct. 1996, pp. 1865-1873.

[13] N. Kuster and Q. Balzano, Energy absorption mechanism by biological bodies in the near field of dipole antennas above 300MHz, IEEE Transaction on Vehicular Technology, vol. 41, no. 1, Feb. 1992, pp. 17-23.

[14] G. Hartsgrove, A. Kraszewski, A. Surowiec, Simulated Biological Materials for Electromagnetic Radiation Absorption Studies, University of Ottawa, Bioelectromagnetics, Canada: 1987, pp. 29-36.

[15] Q. Balzano, O. Garay, T. Manning Jr., Electromagnetic Energy Exposure of Simulated Users of Portable Cellular Telephones, IEEE Transactions on Vehicular Technology, vol. 44, no.3, Aug. 1995.

[16] W. Gander, Computermathematick, Birkhaeuser, Basel, 1992.

[17] W.H. Press, S.A. Teukolsky, W.T. Vetterling, and B.P. Flannery, Numerical Recipes in C, The Art of Scientific Computing, Second edition, Cambridge University Press, 1992.

© 2011 PCTEST Engineering Laboratory, Inc.

[18] Federal Communications Commission, OET Bulletin 65, Evaluating Compliance with FCC Guidelines for Human Exposure to Radiofrequency Electromagnetic Fields. Supplement C, Dec. 1997.

[19] N. Kuster, R. Kastle, T. Schmid, Dosimetric evaluation of mobile communications equipment with known precision, IEEE Transaction on Communications, vol. E80-B, no. 5, May 1997, pp. 645-652.

[20] CENELEC CLC/SC111B, European Prestandard (prENV 50166-2), Human Exposure to Electromagnetic Fields High-frequency: 10kHz-300GHz, Jan. 1995.

[21] Prof. Dr. Niels Kuster, ETH, Eidgenössische Technische Hoschschule Zürich, Dosimetric Evaluation of the Cellular Phone.

[22] IEC 62209-1, Human exposure to radio frequency fields from hand-held and body-mounted wireless communication devices - Human models, instrumentation, and procedures - Part 1: Procedure to determine the specific absorption rate (SAR) for hand-held devices used in close proximity to the ear (frequency range of 300 MHz to 3 GHz), Feb. 2005.

[23] Industry Canada RSS-102 Radio Frequency Exposure Compliance of Radiocommunication Apparatus (All Frequency Bands) Issue 4, March 2010.

[24] Health Canada Safety Code 6 Limits of Human Exposure to Radio Frequency Electromagnetic Fields in the Frequency Range from 3 kHz – 300 GHz, 2009

[25] FCC Public Notice DA-02-1438. Office of Engineering and Technology Announces a Transition Period for the Phantom Requirements of Supplement C to OET Bulletin 65, June 19, 2002

[26] FCC SAR Measurement Procedures for 3G Devices KDB Publication 941225

[27] SAR Measurement procedures for IEEE 802.11a/b/g KDB Publication 248227

[28] FCC SAR Considerations for Handsets with Multiple Transmitters and Antennas, KDB Publication 648474

[29] FCC Application Note for SAR Probe Calibration and System Verification Consideration for Measurements at 150 MHz – 3 GHz, KDB Publication 450824

[30] FCC SAR Evaluation Considerations for Laptop Computers with Antennas Built-in on Display Screens, KDB Publication 616217

[31] FCC SAR Measurement Requirements for 3 – 6 GHz, KDB Publication 865664

[32] FCC Mobile Portable RF Exposure Procedure, KDB Publication 447498

[33] FCC SAR Procedures for Dongle Transmitters, KDB Publication 447498

[34] Anexo à Resolução No. 533, de 10 de Septembro de 2009.

[35] FCC SAR Test Considerations for LTE Handsets and Data Modems, KDB Publication 941225.

[36] IEC 62209-2, Human exposure to radio frequency fields from hand-held and body-mounted wireless communication devices - Human models, instrumentation, and procedures - Part 2: Procedure to determine the specific absorption rate (SAR) for wireless communication devices used in close proximity to the human body (frequency range of 30 MHz to 6 GHz), Mar. 2010.

[37] FCC D06 Hot Spot SAR v01, KDB Publication 941225.

© 2011 PCTEST Engineering Laboratory, Inc.

APPENDIX A: SAR TEST DATA

© 2011 PCTEST Engineering Laboratory, Inc.

PCTEST ENGINEERING LABORATORY, INC.

DUT: A3LSGHI937; Type: 850/1900 GSM/GPRS/EDGE/WCDMA/HSPA Phone with Bluetooth and WLAN; Serial: FI-195-A

Communication System: GSM850; Frequency: 836.6 MHz;Duty Cycle: 1:8.3
Medium: 835 Head; Medium parameters used (interpolated):
f = 836.6 MHz; σ = 0.944 mho/m; ε_r = 43.14; ρ = 1000 kg/m^3
Phantom section: Right Section

Test Date: 08-09-2011; Ambient Temp: 24.2°C; Tissue Temp: 23.1°C

Probe: EX3DV4 - SN3550; ConvF(8.04, 8.04, 8.04); Calibrated: 2/14/2011
Sensor-Surface: 4mm (Mechanical Surface Detection)
Electronics: DAE4 Sn665; Calibrated: 4/20/2011
Phantom: SAM Main; Type: SAM 4.0; Serial: TP-1114
Measurement SW: DASY4, V4.7 Build 80; Postprocessing SW: SEMCAD, V1.8 Build 186

Mode: GSM 850, Right Head, Touch, Mid.ch

Area Scan (7x11x1): Measurement grid: dx=15mm, dy=15mm
Zoom Scan (5x5x7)/Cube 0: Measurement grid: dx=8mm, dy=8mm, dz=5mm
Reference Value = 17.5 V/m
Peak SAR (extrapolated) = 0.371 W/kg
SAR(1 g) = 0.282 mW/g; SAR(10 g) = 0.212 mW/g

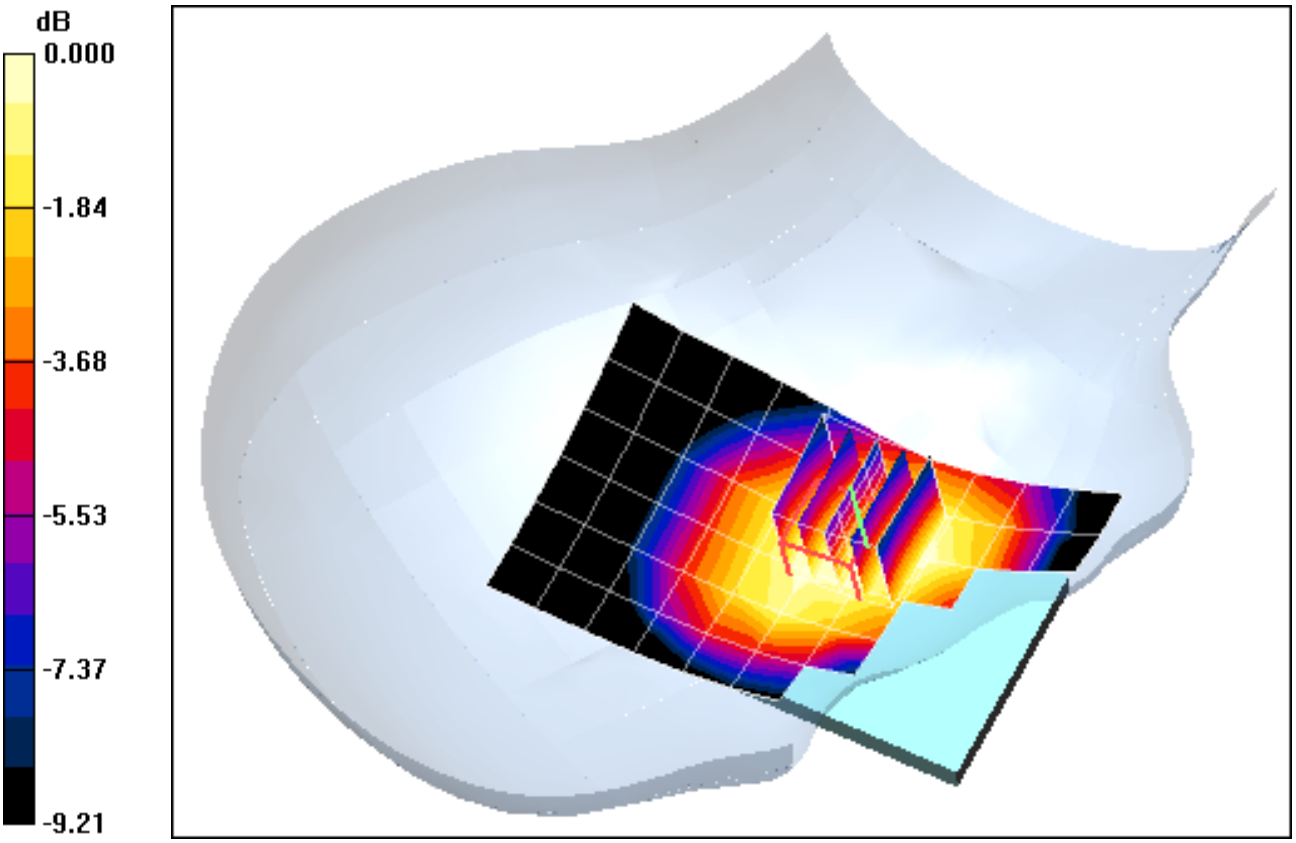

0 dB = 0.295mW/g

PCTEST ENGINEERING LABORATORY, INC.

DUT: A3LSGHI937; Type: 850/1900 GSM/GPRS/EDGE/WCDMA/HSPA Phone with Bluetooth and WLAN; Serial: FI-195-A

Communication System: GSM850; Frequency: 836.6 MHz;Duty Cycle: 1:8.3
Medium: 835 Head; Medium parameters used (interpolated):
f = 836.6 MHz; σ = 0.944 mho/m; ε_r = 43.14; ρ = 1000 kg/m^3
Phantom section: Right Section

Test Date: 08-09-2011; Ambient Temp: 24.2°C; Tissue Temp: 23.1°C

Probe: EX3DV4 - SN3550; ConvF(8.04, 8.04, 8.04); Calibrated: 2/14/2011
Sensor-Surface: 4mm (Mechanical Surface Detection)
Electronics: DAE4 Sn665; Calibrated: 4/20/2011
Phantom: SAM Main; Type: SAM 4.0; Serial: TP-1114
Measurement SW: DASY4, V4.7 Build 80; Postprocessing SW: SEMCAD, V1.8 Build 186

Mode: GSM 850, Right Head, Tilt, Mid.ch

Area Scan (7x11x1): Measurement grid: dx=15mm, dy=15mm
Zoom Scan (5x5x7)/Cube 0: Measurement grid: dx=8mm, dy=8mm, dz=5mm
Reference Value = 14.2 V/m
Peak SAR (extrapolated) = 0.254 W/kg
SAR(1 g) = 0.197 mW/g; SAR(10 g) = 0.149 mW/g

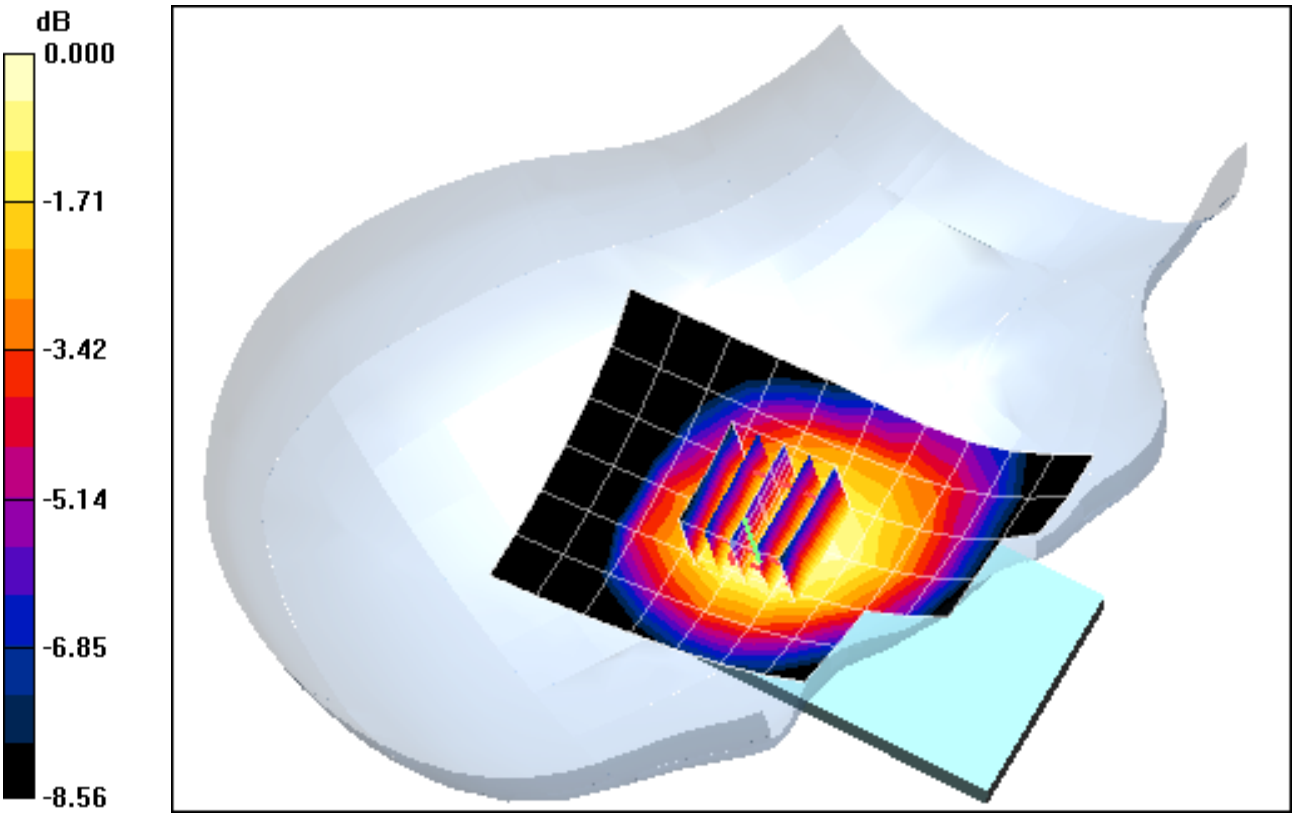

0 dB = 0.209mW/g

PCTEST ENGINEERING LABORATORY, INC.

DUT: A3LSGHI937; Type: 850/1900 GSM/GPRS/EDGE/WCDMA/HSPA Phone with Bluetooth and WLAN; Serial: FI-195-A

Communication System: GSM850; Frequency: 836.6 MHz;Duty Cycle: 1:8.3
Medium: 835 Head; Medium parameters used (interpolated):
f = 836.6 MHz; σ = 0.944 mho/m; ε_r = 43.14; ρ = 1000 kg/m^3
Phantom section: Left Section

Test Date: 08-09-2011; Ambient Temp: 24.2°C; Tissue Temp: 23.1°C

Probe: EX3DV4 - SN3550; ConvF(8.04, 8.04, 8.04); Calibrated: 2/14/2011
Sensor-Surface: 4mm (Mechanical Surface Detection)
Electronics: DAE4 Sn665; Calibrated: 4/20/2011
Phantom: SAM Main; Type: SAM 4.0; Serial: TP-1114
Measurement SW: DASY4, V4.7 Build 80; Postprocessing SW: SEMCAD, V1.8 Build 186

Mode: GSM 850, Left Head, Touch, Mid.ch

Area Scan (7x11x1): Measurement grid: dx=15mm, dy=15mm
Zoom Scan (5x5x7)/Cube 0: Measurement grid: dx=8mm, dy=8mm, dz=5mm
Reference Value = 17.1 V/m
Peak SAR (extrapolated) = 0.337 W/kg
SAR(1 g) = 0.271 mW/g; SAR(10 g) = 0.205 mW/g

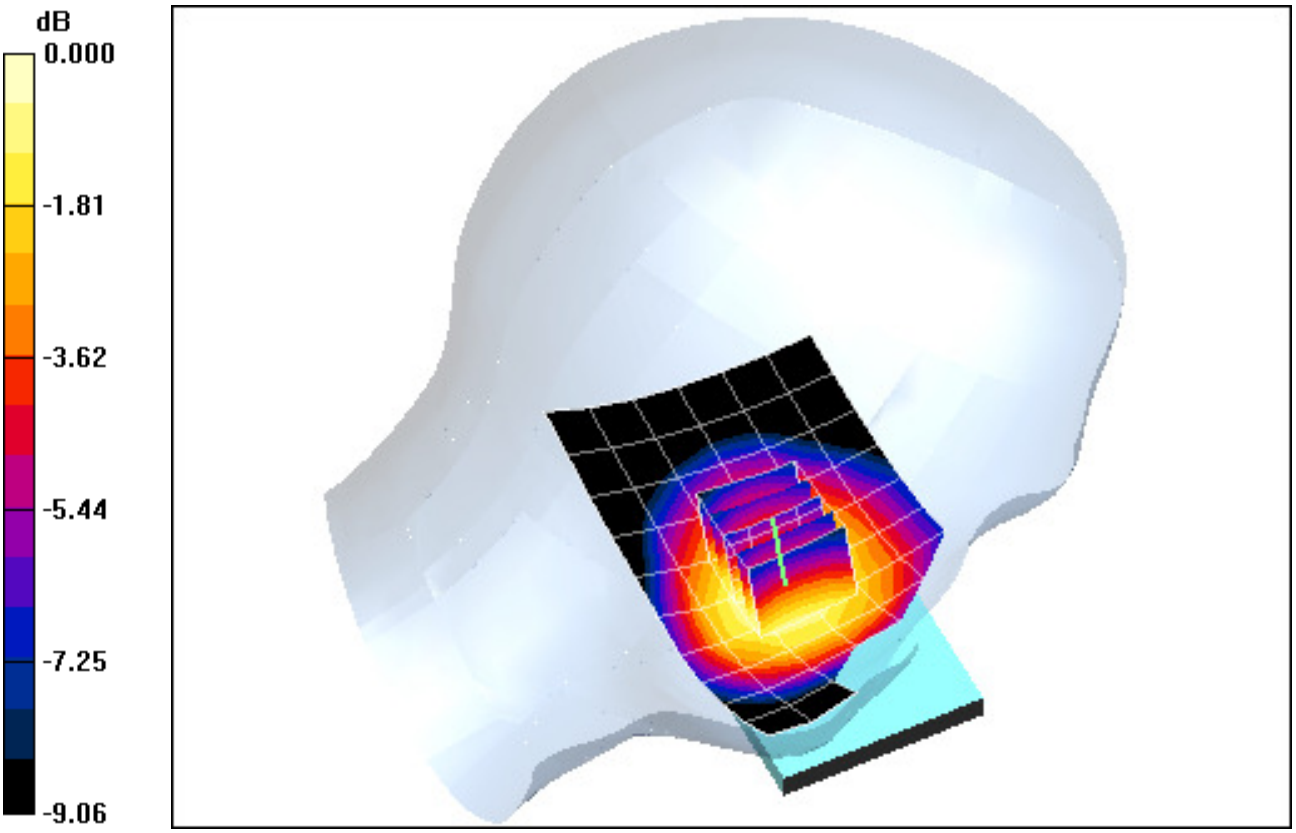

0 dB = 0.284mW/g

PCTEST ENGINEERING LABORATORY, INC.

DUT: A3LSGHI937; Type: 850/1900 GSM/GPRS/EDGE/WCDMA/HSPA Phone with Bluetooth and WLAN; Serial: FI-195-A

Communication System: GSM850; Frequency: 836.6 MHz;Duty Cycle: 1:8.3
Medium: 835 Head; Medium parameters used (interpolated):
f = 836.6 MHz; σ = 0.944 mho/m; ε_r = 43.14; ρ = 1000 kg/m^3
Phantom section: Left Section

Test Date: 08-09-2011; Ambient Temp: 24.2°C; Tissue Temp: 23.1°C

Probe: EX3DV4 - SN3550; ConvF(8.04, 8.04, 8.04); Calibrated: 2/14/2011
Sensor-Surface: 4mm (Mechanical Surface Detection)
Electronics: DAE4 Sn665; Calibrated: 4/20/2011
Phantom: SAM Main; Type: SAM 4.0; Serial: TP-1114
Measurement SW: DASY4, V4.7 Build 80; Postprocessing SW: SEMCAD, V1.8 Build 186

Mode: GSM 850, Left Head, Tilt, Mid.ch

Area Scan (7x11x1): Measurement grid: dx=15mm, dy=15mm
Zoom Scan (5x5x7)/Cube 0: Measurement grid: dx=8mm, dy=8mm, dz=5mm
Reference Value = 14.2 V/m
Peak SAR (extrapolated) = 0.224 W/kg
SAR(1 g) = 0.177 mW/g; SAR(10 g) = 0.133 mW/g

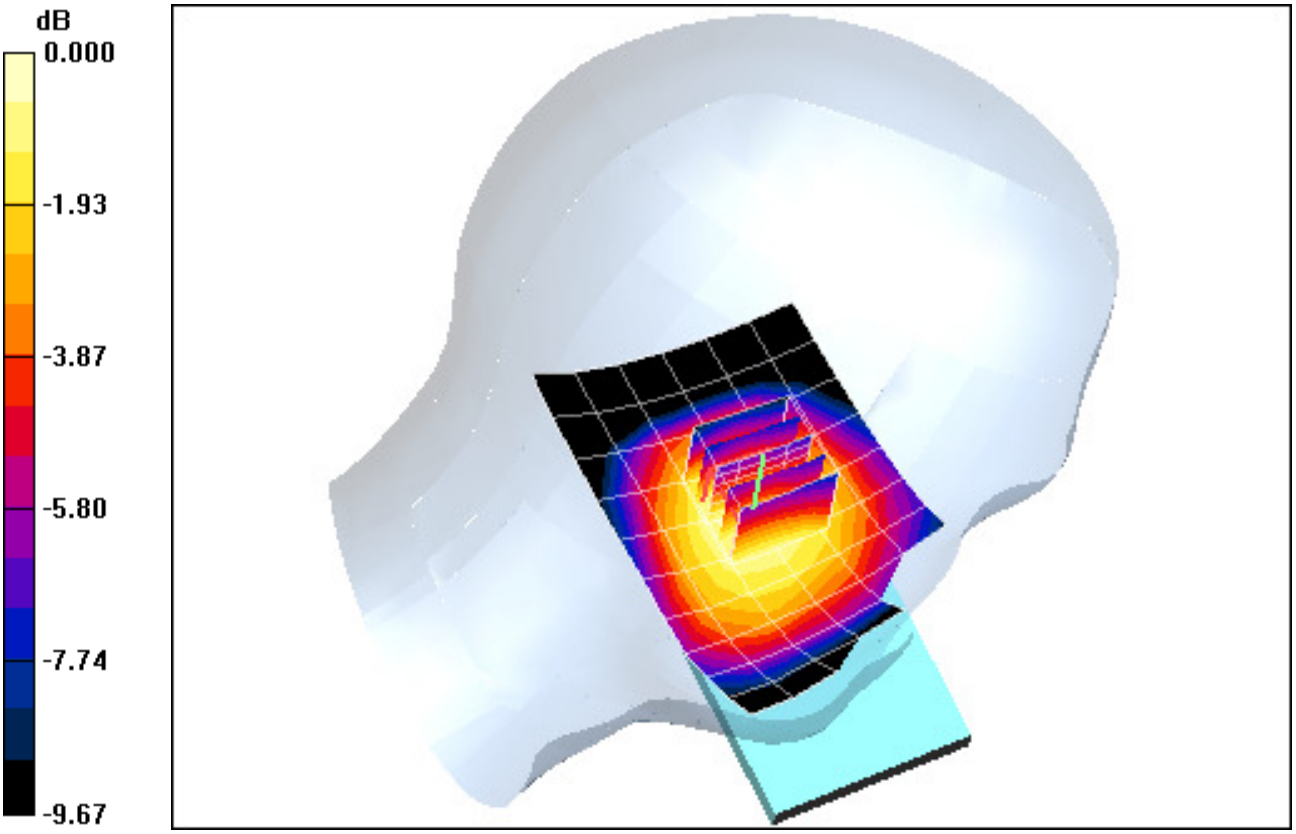

0 dB = 0.188mW/g

PCTEST ENGINEERING LABORATORY, INC.

DUT: A3LSGHI937; Type: 850/1900 GSM/GPRS/EDGE/WCDMA/HSPA Phone with Bluetooth and WLAN; Serial: FI-195-A

Communication System: GSM1900; Frequency: 1880 MHz;Duty Cycle: 1:8.3
Medium: 1900 Head; Medium parameters used:
f = 1880 MHz; σ = 1.35 mho/m; ε_r = 41.5; ρ = 1000 kg/m^3
Phantom section: Right Section

Test Date: 08-10-2011; Ambient Temp: 23.4°C; Tissue Temp: 22.0°C

Probe: ES3DV2 - SN3022; ConvF(4.83, 4.83, 4.83); Calibrated: 9/21/2010
Sensor-Surface: 4mm (Mechanical Surface Detection)
Electronics: DAE4 Sn704; Calibrated: 3/17/2011
Phantom: SAM Sub Dasy B; Type: SAM 4.0; Serial: TP-1626
Measurement SW: DASY4, V4.7 Build 80; Postprocessing SW: SEMCAD, V1.8 Build 186

Mode: GSM 1900, Right Head, Touch, Mid.ch

Area Scan (7x12x1): Measurement grid: dx=15mm, dy=15mm
Zoom Scan (5x5x7)/Cube 0: Measurement grid: dx=8mm, dy=8mm, dz=5mm
Reference Value = 16.0 V/m
Peak SAR (extrapolated) = 0.508 W/kg
SAR(1 g) = 0.328 mW/g; SAR(10 g) = 0.197 mW/g

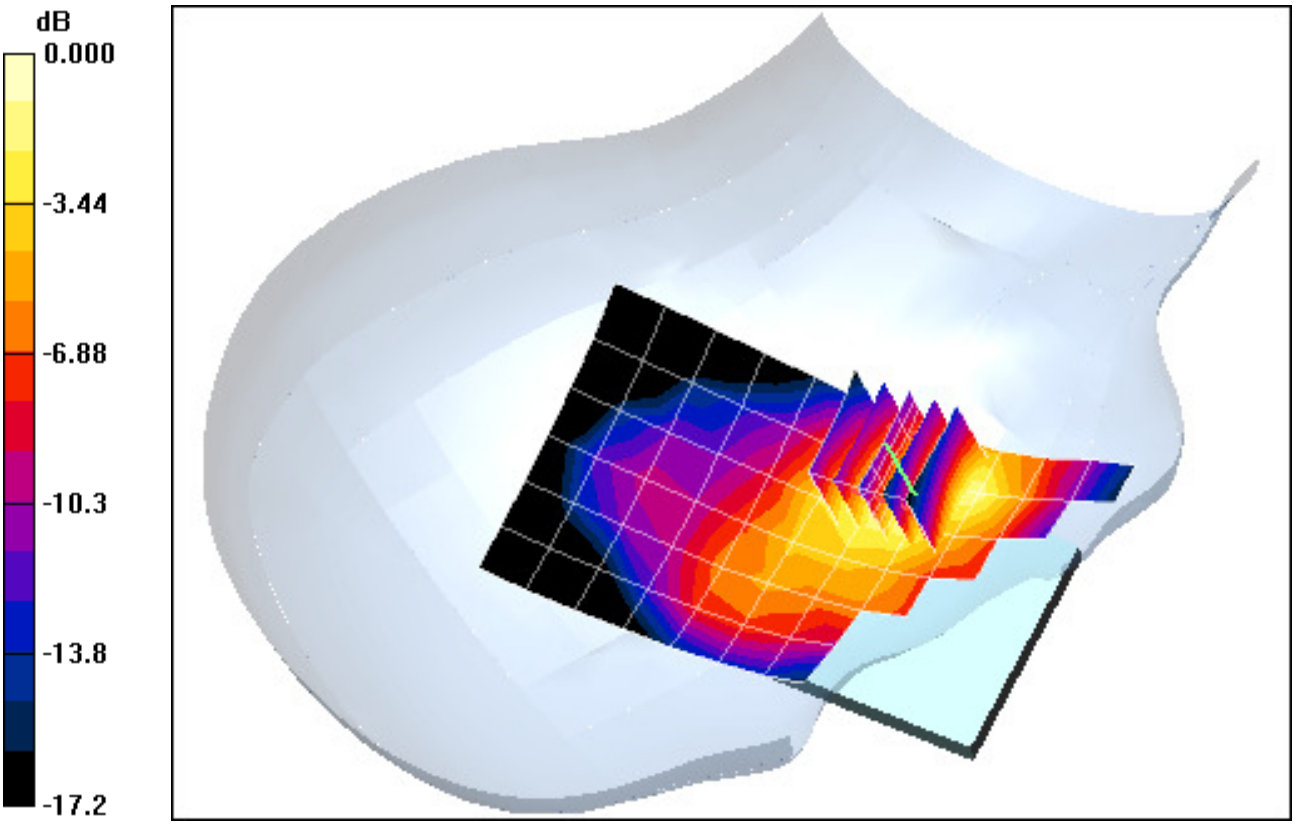

0 dB = 0.357mW/g

PCTEST ENGINEERING LABORATORY, INC.

DUT: A3LSGHI937; Type: 850/1900 GSM/GPRS/EDGE/WCDMA/HSPA Phone with Bluetooth and WLAN; Serial: FI-195-A

Communication System: GSM1900; Frequency: 1880 MHz;Duty Cycle: 1:8.3
Medium: 1900 Head; Medium parameters used:
f = 1880 MHz; σ = 1.35 mho/m; ε_r = 41.5; ρ = 1000 kg/m^3
Phantom section: Right Section

Test Date: 08-10-2011; Ambient Temp: 23.4°C; Tissue Temp: 22.0°C

Probe: ES3DV2 - SN3022; ConvF(4.83, 4.83, 4.83); Calibrated: 9/21/2010
Sensor-Surface: 4mm (Mechanical Surface Detection)
Electronics: DAE4 Sn704; Calibrated: 3/17/2011
Phantom: SAM Sub Dasy B; Type: SAM 4.0; Serial: TP-1626
Measurement SW: DASY4, V4.7 Build 80; Postprocessing SW: SEMCAD, V1.8 Build 186

Mode: GSM 1900, Right Head, Tilt, Mid.ch

Area Scan (7x12x1): Measurement grid: dx=15mm, dy=15mm
Zoom Scan (5x5x7)/Cube 0: Measurement grid: dx=8mm, dy=8mm, dz=5mm
Reference Value = 7.98 V/m
Peak SAR (extrapolated) = 0.120 W/kg
SAR(1 g) = 0.076 mW/g; SAR(10 g) = 0.045 mW/g

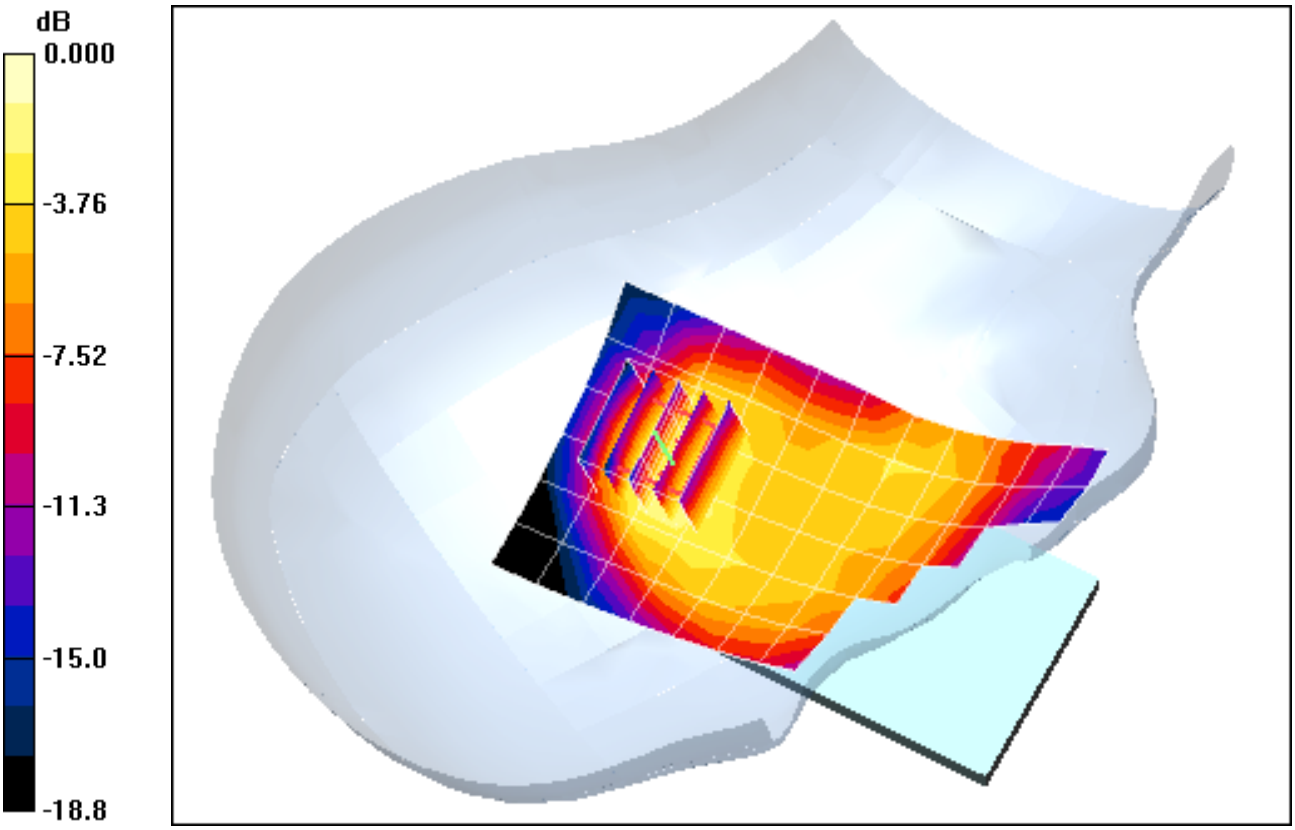

0 dB = 0.085mW/g

PCTEST ENGINEERING LABORATORY, INC.

DUT: A3LSGHI937; Type: 850/1900 GSM/GPRS/EDGE/WCDMA/HSPA Phone with Bluetooth and WLAN; Serial: FI-195-A

Communication System: GSM1900; Frequency: 1880 MHz;Duty Cycle: 1:8.3
Medium: 1900 Head; Medium parameters used:
f = 1880 MHz; σ = 1.35 mho/m; ε_r = 41.5; ρ = 1000 kg/m^3
Phantom section: Left Section

Test Date: 08-10-2011; Ambient Temp: 23.4°C; Tissue Temp: 22.0°C

Probe: ES3DV2 - SN3022; ConvF(4.83, 4.83, 4.83); Calibrated: 9/21/2010
Sensor-Surface: 4mm (Mechanical Surface Detection)
Electronics: DAE4 Sn704; Calibrated: 3/17/2011
Phantom: SAM Sub Dasy B; Type: SAM 4.0; Serial: TP-1626
Measurement SW: DASY4, V4.7 Build 80; Postprocessing SW: SEMCAD, V1.8 Build 186

Mode: GSM 1900, Left Head, Touch, Mid.ch

Area Scan (7x12x1): Measurement grid: dx=15mm, dy=15mm
Zoom Scan (5x5x7)/Cube 0: Measurement grid: dx=8mm, dy=8mm, dz=5mm
Reference Value = 10.1 V/m
Peak SAR (extrapolated) = 0.210 W/kg
SAR(1 g) = 0.141 mW/g; SAR(10 g) = 0.090 mW/g

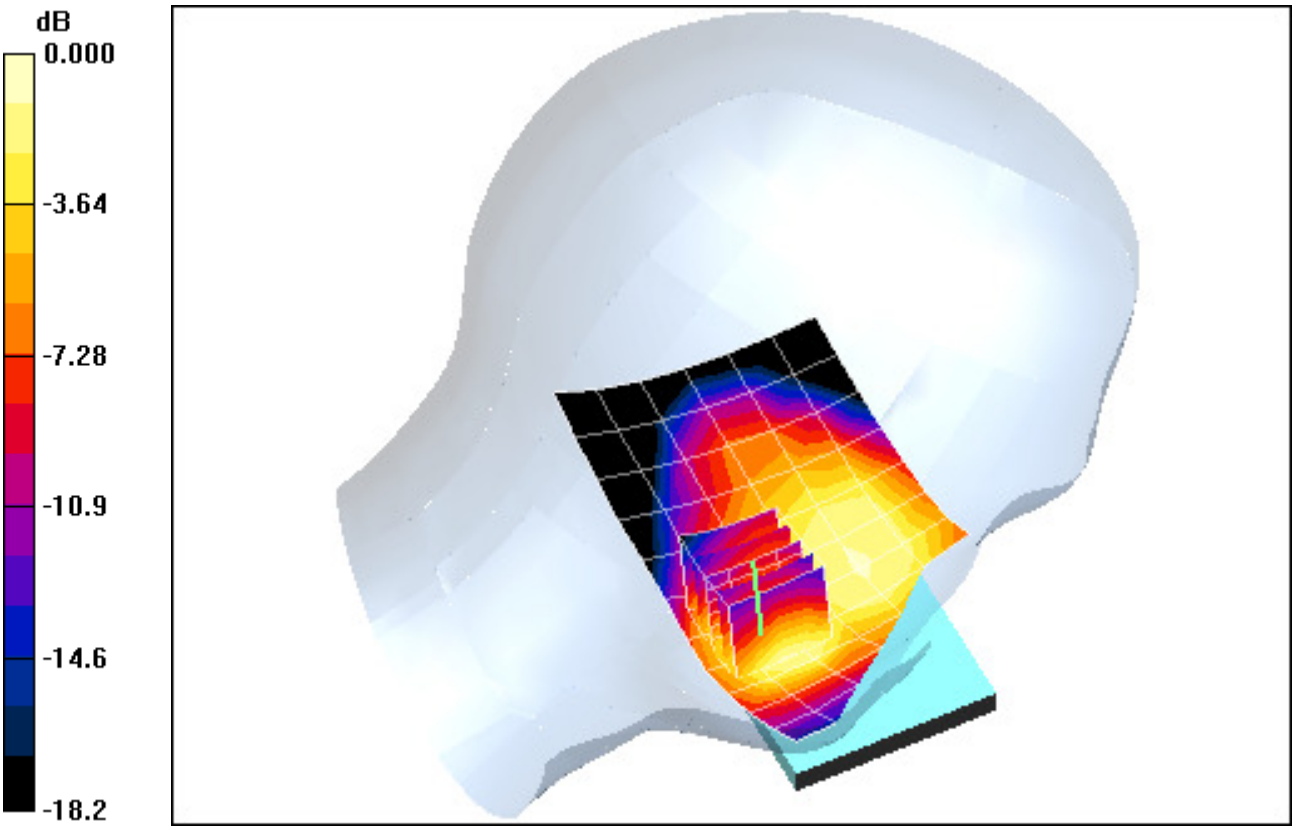

0 dB = 0.152mW/g

PCTEST ENGINEERING LABORATORY, INC.

DUT: A3LSGHI937; Type: 850/1900 GSM/GPRS/EDGE/WCDMA/HSPA Phone with Bluetooth and WLAN; Serial: FI-195-A

Communication System: GSM1900; Frequency: 1880 MHz;Duty Cycle: 1:8.3
Medium: 1900 Head; Medium parameters used:
f = 1880 MHz; σ = 1.35 mho/m; ε_r = 41.5; ρ = 1000 kg/m^3
Phantom section: Left Section

Test Date: 08-10-2011; Ambient Temp: 23.4°C; Tissue Temp: 22.0°C

Probe: ES3DV2 - SN3022; ConvF(4.83, 4.83, 4.83); Calibrated: 9/21/2010
Sensor-Surface: 4mm (Mechanical Surface Detection)
Electronics: DAE4 Sn704; Calibrated: 3/17/2011
Phantom: SAM Sub Dasy B; Type: SAM 4.0; Serial: TP-1626
Measurement SW: DASY4, V4.7 Build 80; Postprocessing SW: SEMCAD, V1.8 Build 186

Mode: GSM 1900, Left Head, Tilt, Mid.ch

Area Scan (7x12x1): Measurement grid: dx=15mm, dy=15mm
Zoom Scan (5x5x7)/Cube 0: Measurement grid: dx=8mm, dy=8mm, dz=5mm
Reference Value = 8.61 V/m
Peak SAR (extrapolated) = 0.107 W/kg
SAR(1 g) = 0.071 mW/g; SAR(10 g) = 0.044 mW/g

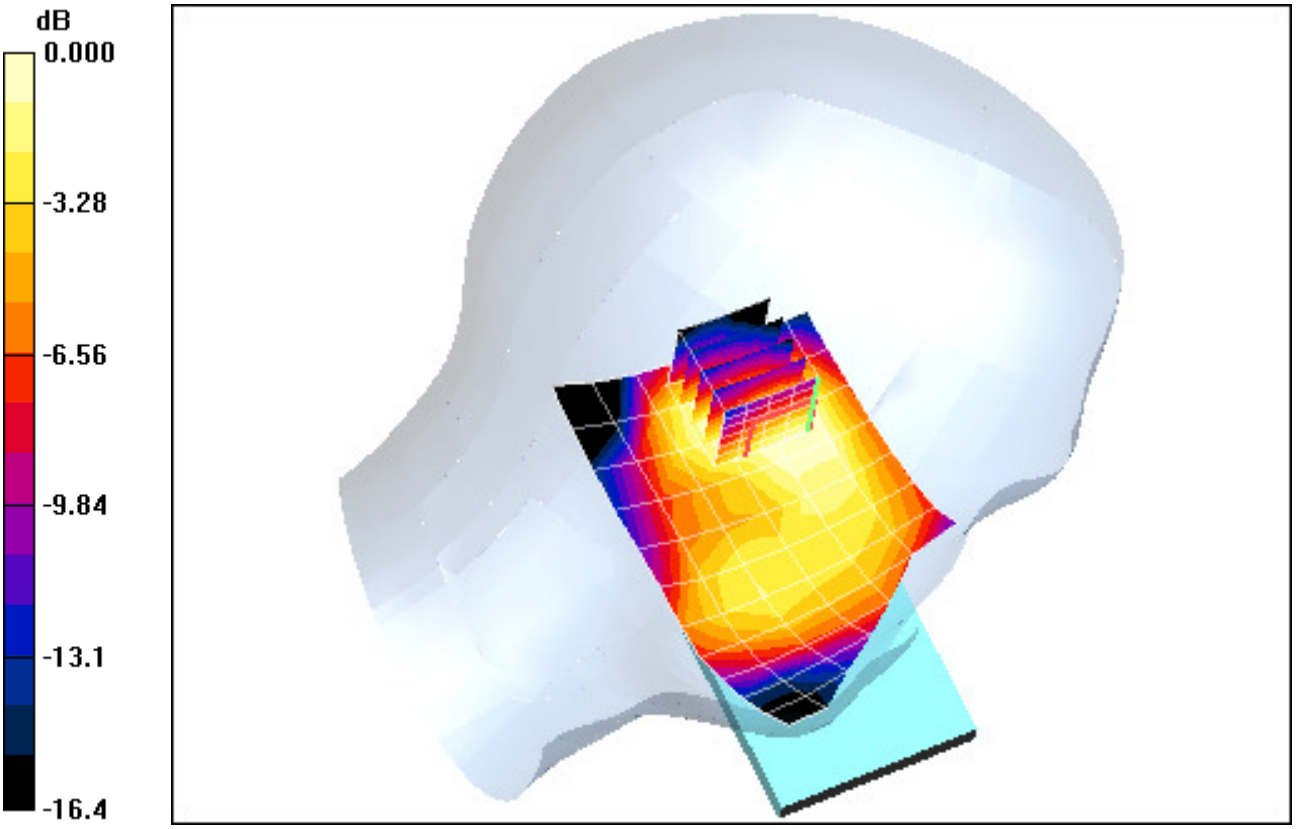

0 dB = 0.074mW/g

PCTEST ENGINEERING LABORATORY, INC.

DUT: A3LSGHI937; Type: 850/1900 GSM/GPRS/EDGE/WCDMA/HSPA Phone with Bluetooth and WLAN; Serial: FI-195-A

Communication System: WCDMA850; Frequency: 836.6 MHz;Duty Cycle: 1:1
Medium: 835 Head Medium parameters used (interpolated):
f = 836.6 MHz; σ = 0.944 mho/m; ε_r = 43.14; ρ = 1000 kg/m^3
Phantom section: Right Section

Test Date: 08-09-2011; Ambient Temp: 24.2°C; Tissue Temp: 23.1°C

Probe: EX3DV4 - SN3550; ConvF(8.04, 8.04, 8.04); Calibrated: 2/14/2011
Sensor-Surface: 4mm (Mechanical Surface Detection)
Electronics: DAE4 Sn665; Calibrated: 4/20/2011
Phantom: SAM Main; Type: SAM 4.0; Serial: TP-1114
Measurement SW: DASY4, V4.7 Build 80; Postprocessing SW: SEMCAD, V1.8 Build 186

Mode: WCDMA 850, Right Head, Touch, Mid.ch

Area Scan (7x10x1): Measurement grid: dx=15mm, dy=15mm
Zoom Scan (5x5x7)/Cube 0: Measurement grid: dx=8mm, dy=8mm, dz=5mm
Reference Value = 18.4 V/m
Peak SAR (extrapolated) = 0.393 W/kg
SAR(1 g) = 0.311 mW/g; SAR(10 g) = 0.234 mW/g

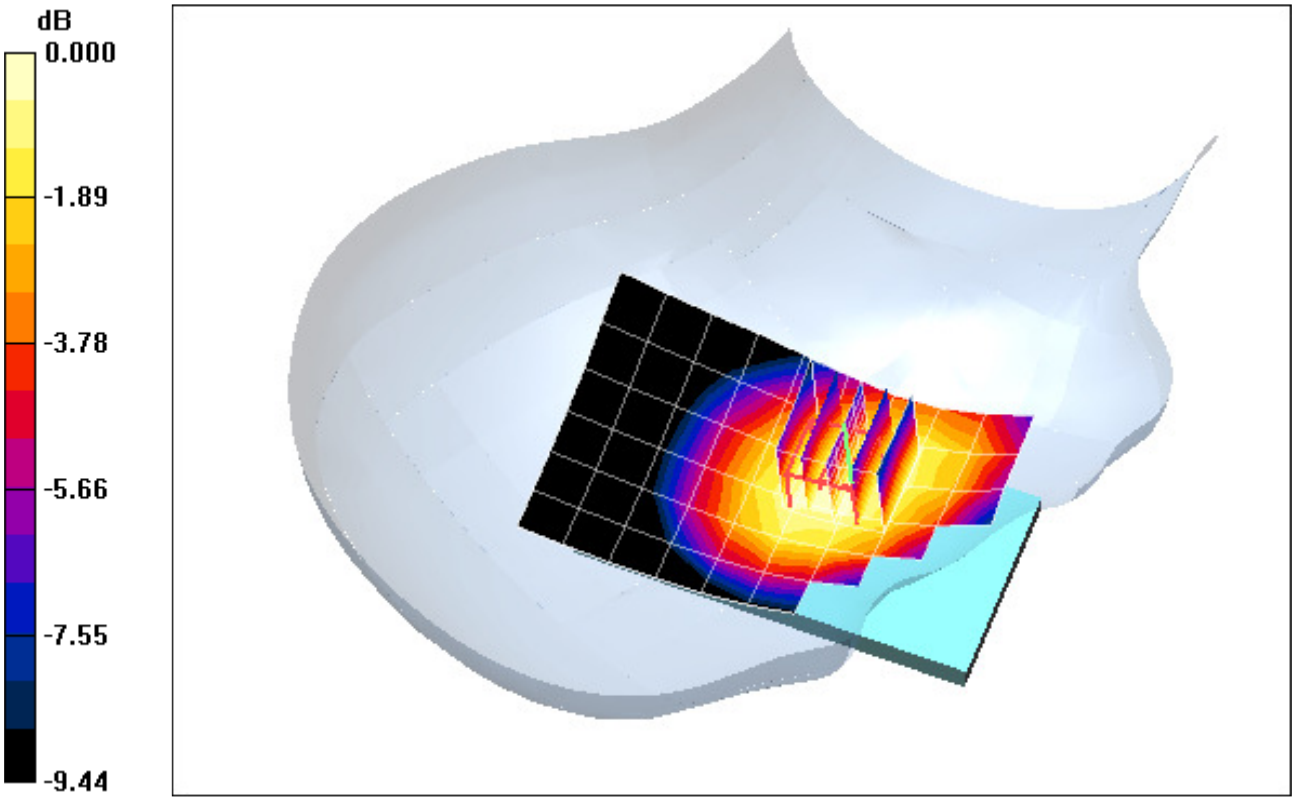

0 dB = 0.331mW/g

PCTEST ENGINEERING LABORATORY, INC.

DUT: A3LSGHI937; Type: 850/1900 GSM/GPRS/EDGE/WCDMA/HSPA Phone with Bluetooth and WLAN; Serial: FI-195-A

Communication System: WCDMA850; Frequency: 836.6 MHz;Duty Cycle: 1:1
Medium: 835 Head Medium parameters used (interpolated):
f = 836.6 MHz; σ = 0.944 mho/m; ε_r = 43.14; ρ = 1000 kg/m^3
Phantom section: Right Section

Test Date: 08-09-2011; Ambient Temp: 24.2°C; Tissue Temp: 23.1°C

Probe: EX3DV4 - SN3550; ConvF(8.04, 8.04, 8.04); Calibrated: 2/14/2011
Sensor-Surface: 4mm (Mechanical Surface Detection)
Electronics: DAE4 Sn665; Calibrated: 4/20/2011
Phantom: SAM Main; Type: SAM 4.0; Serial: TP-1114
Measurement SW: DASY4, V4.7 Build 80; Postprocessing SW: SEMCAD, V1.8 Build 186

Mode: WCDMA 850, Right Head, Touch, Mid.ch

Area Scan (7x10x1): Measurement grid: dx=15mm, dy=15mm
Zoom Scan (5x5x7)/Cube 0: Measurement grid: dx=8mm, dy=8mm, dz=5mm
Reference Value = 18.4 V/m
Peak SAR (extrapolated) = 0.393 W/kg
SAR(1 g) = 0.311 mW/g; SAR(10 g) = 0.234 mW/g

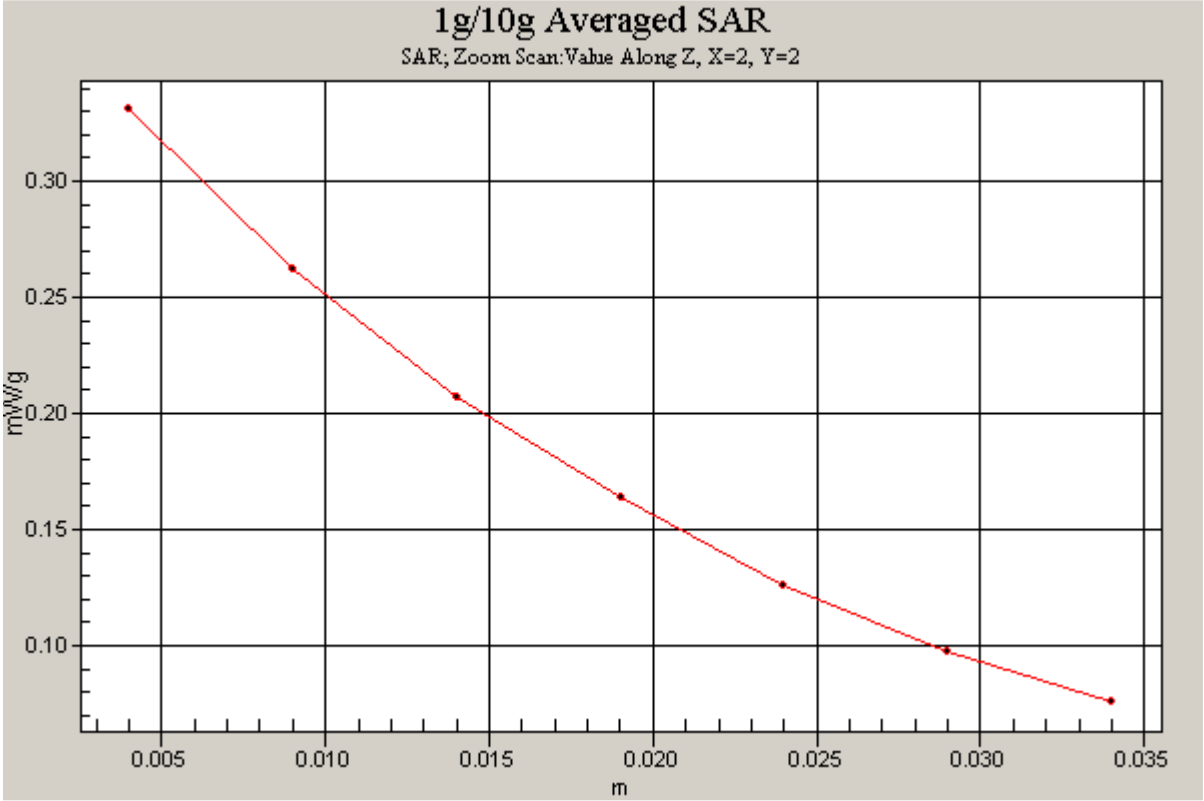

PCTEST ENGINEERING LABORATORY, INC.

DUT: A3LSGHI937; Type: 850/1900 GSM/GPRS/EDGE/WCDMA/HSPA Phone with Bluetooth and WLAN; Serial: FI-195-A

Communication System: WCDMA850; Frequency: 836.6 MHz;Duty Cycle: 1:1
Medium: 835 Head Medium parameters used (interpolated):
f = 836.6 MHz; σ = 0.944 mho/m; ε_r = 43.14; ρ = 1000 kg/m^3
Phantom section: Right Section

Test Date: 08-09-2011; Ambient Temp: 24.2°C; Tissue Temp: 23.1°C

Probe: EX3DV4 - SN3550; ConvF(8.04, 8.04, 8.04); Calibrated: 2/14/2011
Sensor-Surface: 4mm (Mechanical Surface Detection)
Electronics: DAE4 Sn665; Calibrated: 4/20/2011
Phantom: SAM Main; Type: SAM 4.0; Serial: TP-1114
Measurement SW: DASY4, V4.7 Build 80; Postprocessing SW: SEMCAD, V1.8 Build 186

Mode: WCDMA 850, Right Head, Tilt, Mid.ch

Area Scan (7x10x1): Measurement grid: dx=15mm, dy=15mm
Zoom Scan (5x5x7)/Cube 0: Measurement grid: dx=8mm, dy=8mm, dz=5mm
Reference Value = 14.2 V/m
Peak SAR (extrapolated) = 0.233 W/kg
SAR(1 g) = 0.187 mW/g; SAR(10 g) = 0.141 mW/g

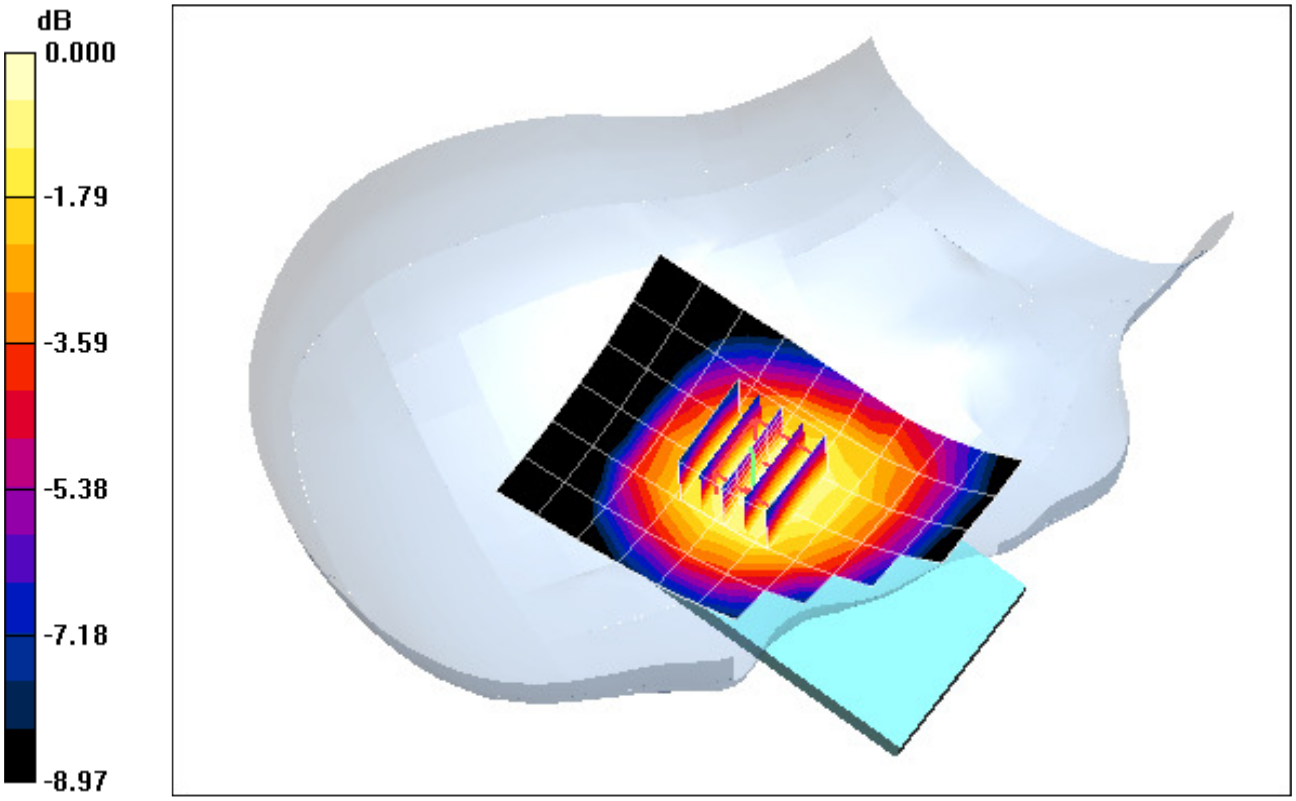

0 dB = 0.198mW/g

PCTEST ENGINEERING LABORATORY, INC.

DUT: A3LSGHI937; Type: 850/1900 GSM/GPRS/EDGE/WCDMA/HSPA Phone with Bluetooth and WLAN; Serial: FI-195-A

Communication System: WCDMA850; Frequency: 836.6 MHz;Duty Cycle: 1:1
Medium: 835 Head Medium parameters used (interpolated):
f = 836.6 MHz; σ = 0.944 mho/m; ε_r = 43.14; ρ = 1000 kg/m^3
Phantom section: Left Section

Test Date: 08-09-2011; Ambient Temp: 24.2°C; Tissue Temp: 23.1°C

Probe: EX3DV4 - SN3550; ConvF(8.04, 8.04, 8.04); Calibrated: 2/14/2011
Sensor-Surface: 4mm (Mechanical Surface Detection)
Electronics: DAE4 Sn665; Calibrated: 4/20/2011
Phantom: SAM Main; Type: SAM 4.0; Serial: TP-1114
Measurement SW: DASY4, V4.7 Build 80; Postprocessing SW: SEMCAD, V1.8 Build 186

Mode: WCDMA 850, Left Head, Touch, Mid.ch

Area Scan (7x10x1): Measurement grid: dx=15mm, dy=15mm
Zoom Scan (5x5x7)/Cube 0: Measurement grid: dx=8mm, dy=8mm, dz=5mm
Reference Value = 16.9 V/m
Peak SAR (extrapolated) = 0.337 W/kg
SAR(1 g) = 0.269 mW/g; SAR(10 g) = 0.203 mW/g

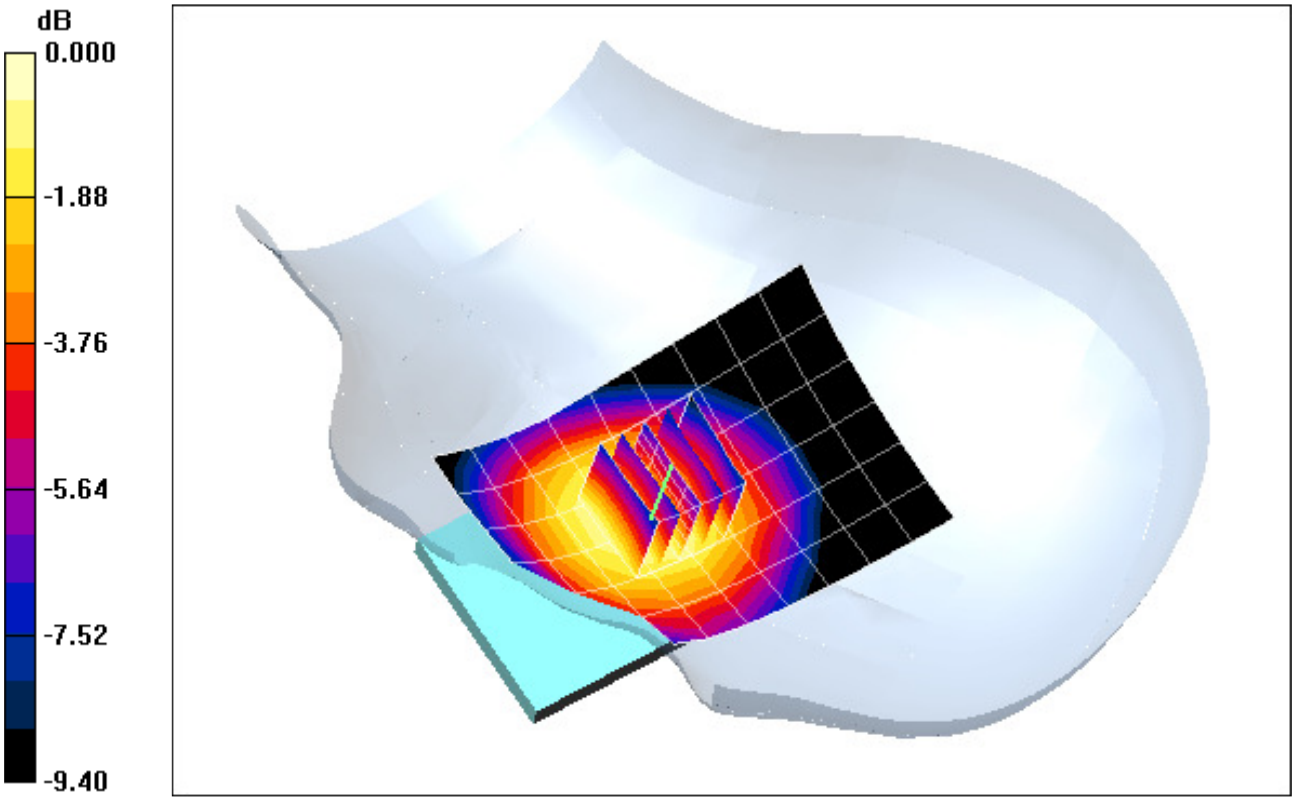

0 dB = 0.281mW/g

PCTEST ENGINEERING LABORATORY, INC.

DUT: A3LSGHI937; Type: 850/1900 GSM/GPRS/EDGE/WCDMA/HSPA Phone with Bluetooth and WLAN; Serial: FI-195-A

Communication System: WCDMA850; Frequency: 836.6 MHz;Duty Cycle: 1:1
Medium: 835 Head Medium parameters used (interpolated):
f = 836.6 MHz; σ = 0.944 mho/m; ε_r = 43.14; ρ = 1000 kg/m^3
Phantom section: Left Section

Test Date: 08-09-2011; Ambient Temp: 24.2°C; Tissue Temp: 23.1°C

Probe: EX3DV4 - SN3550; ConvF(8.04, 8.04, 8.04); Calibrated: 2/14/2011
Sensor-Surface: 4mm (Mechanical Surface Detection)
Electronics: DAE4 Sn665; Calibrated: 4/20/2011
Phantom: SAM Main; Type: SAM 4.0; Serial: TP-1114
Measurement SW: DASY4, V4.7 Build 80; Postprocessing SW: SEMCAD, V1.8 Build 186

Mode: WCDMA 850, Left Head, Tilt, Mid.ch

Area Scan (7x10x1): Measurement grid: dx=15mm, dy=15mm
Zoom Scan (5x5x7)/Cube 0: Measurement grid: dx=8mm, dy=8mm, dz=5mm
Reference Value = 13.7 V/m
Peak SAR (extrapolated) = 0.223 W/kg
SAR(1 g) = 0.173 mW/g; SAR(10 g) = 0.129 mW/g

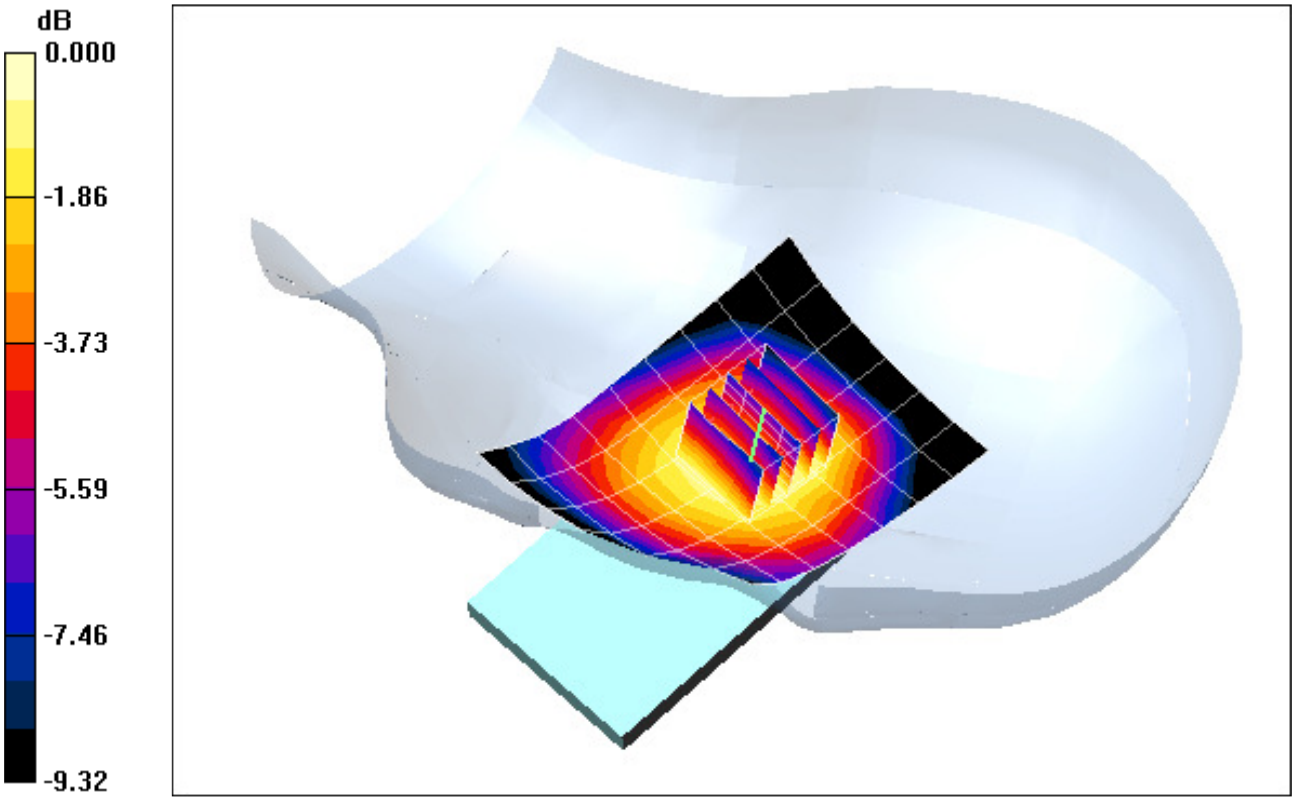

0 dB = 0.184mW/g

PCTEST ENGINEERING LABORATORY, INC.

DUT: A3LSGHI937; Type: 850/1900 GSM/GPRS/EDGE/WCDMA/HSPA Phone with Bluetooth and WLAN; Serial: FI-195-A

Communication System: WCDMA1900; Frequency: 1880 MHz;Duty Cycle: 1:1
Medium: 1900 Head Medium parameters used:
f = 1880 MHz; σ = 1.35 mho/m; ε_r = 41.5; ρ = 1000 kg/m^3
Phantom section: Right Section

Test Date: 08-10-2011; Ambient Temp: 23.4°C; Tissue Temp: 22.0°C

Probe: ES3DV2 - SN3022; ConvF(4.83, 4.83, 4.83); Calibrated: 9/21/2010
Sensor-Surface: 4mm (Mechanical Surface Detection)
Electronics: DAE4 Sn704; Calibrated: 3/17/2011
Phantom: SAM Sub Dasy B; Type: SAM 4.0; Serial: TP-1626
Measurement SW: DASY4, V4.7 Build 80; Postprocessing SW: SEMCAD, V1.8 Build 186

Mode: WCDMA 1900, Right Head, Touch, Mid.ch

Area Scan (7x12x1): Measurement grid: dx=15mm, dy=15mm
Zoom Scan (5x5x7)/Cube 0: Measurement grid: dx=8mm, dy=8mm, dz=5mm
Reference Value = 16.3 V/m
Peak SAR (extrapolated) = 0.502 W/kg
SAR(1 g) = 0.334 mW/g; SAR(10 g) = 0.200 mW/g

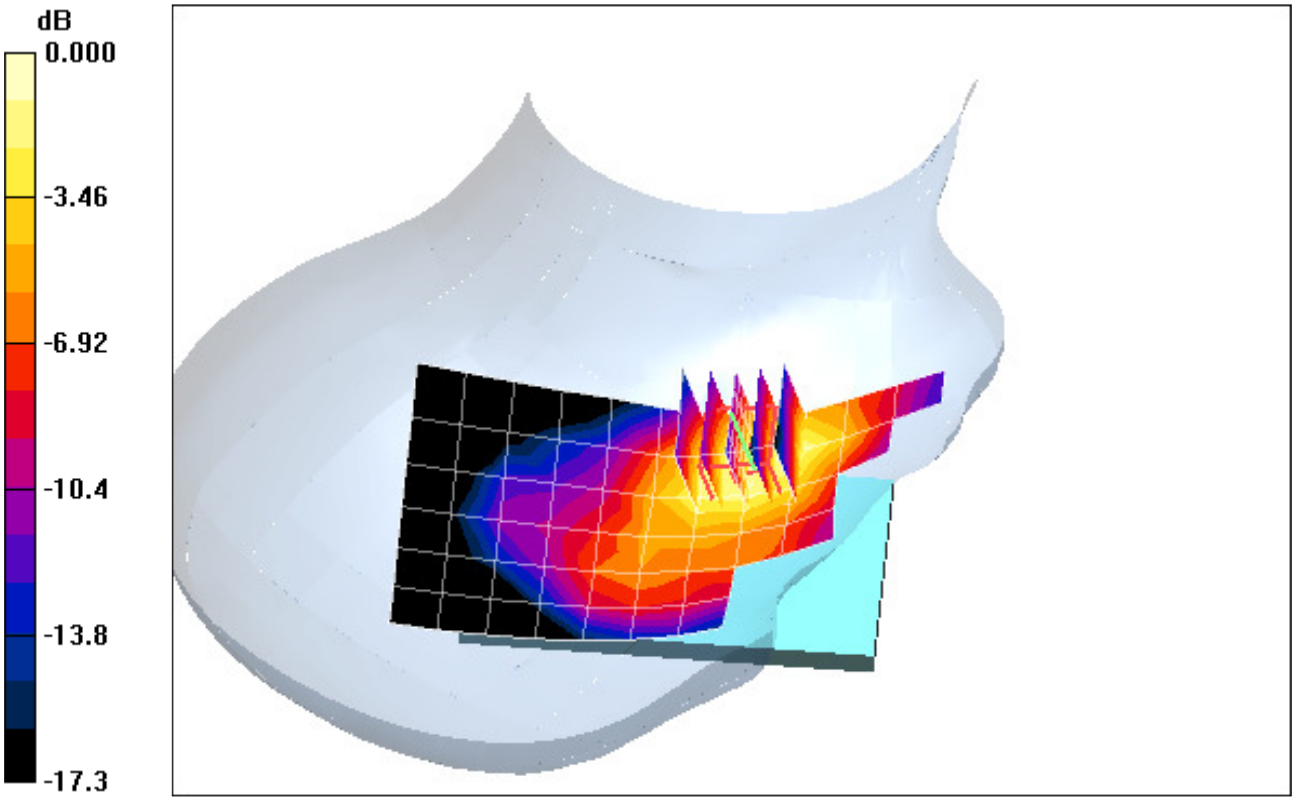

0 dB = 0.369mW/g

PCTEST ENGINEERING LABORATORY, INC.

DUT: A3LSGHI937; Type: 850/1900 GSM/GPRS/EDGE/WCDMA/HSPA Phone with Bluetooth and WLAN; Serial: FI-195-A

Communication System: WCDMA1900; Frequency: 1880 MHz;Duty Cycle: 1:1
Medium: 1900 Head Medium parameters used:
f = 1880 MHz; σ = 1.35 mho/m; ε_r = 41.5; ρ = 1000 kg/m^3
Phantom section: Right Section

Test Date: 08-10-2011; Ambient Temp: 23.4°C; Tissue Temp: 22.0°C

Probe: ES3DV2 - SN3022; ConvF(4.83, 4.83, 4.83); Calibrated: 9/21/2010
Sensor-Surface: 4mm (Mechanical Surface Detection)
Electronics: DAE4 Sn704; Calibrated: 3/17/2011
Phantom: SAM Sub Dasy B; Type: SAM 4.0; Serial: TP-1626
Measurement SW: DASY4, V4.7 Build 80; Postprocessing SW: SEMCAD, V1.8 Build 186

Mode: WCDMA 1900, Right Head, Touch, Mid.ch

Area Scan (7x12x1): Measurement grid: dx=15mm, dy=15mm
Zoom Scan (5x5x7)/Cube 0: Measurement grid: dx=8mm, dy=8mm, dz=5mm
Reference Value = 16.3 V/m
Peak SAR (extrapolated) = 0.502 W/kg
SAR(1 g) = 0.334 mW/g; SAR(10 g) = 0.200 mW/g

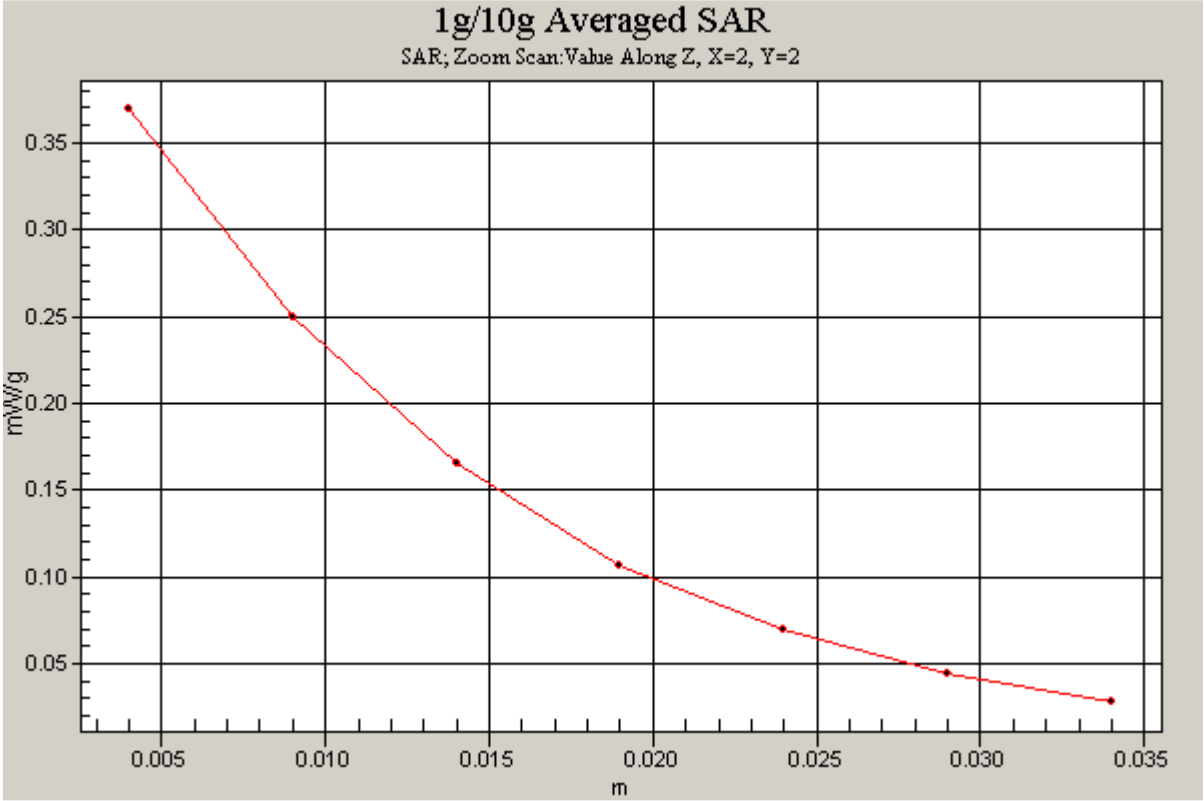

PCTEST ENGINEERING LABORATORY, INC.

DUT: A3LSGHI937; Type: 850/1900 GSM/GPRS/EDGE/WCDMA/HSPA Phone with Bluetooth and WLAN; Serial: FI-195-A

Communication System: WCDMA1900; Frequency: 1880 MHz;Duty Cycle: 1:1
Medium: 1900 Head Medium parameters used:
f = 1880 MHz; σ = 1.35 mho/m; ε_r = 41.5; ρ = 1000 kg/m^3
Phantom section: Right Section

Test Date: 08-10-2011; Ambient Temp: 23.4°C; Tissue Temp: 22.0°C

Probe: ES3DV2 - SN3022; ConvF(4.83, 4.83, 4.83); Calibrated: 9/21/2010
Sensor-Surface: 4mm (Mechanical Surface Detection)
Electronics: DAE4 Sn704; Calibrated: 3/17/2011
Phantom: SAM Sub Dasy B; Type: SAM 4.0; Serial: TP-1626
Measurement SW: DASY4, V4.7 Build 80; Postprocessing SW: SEMCAD, V1.8 Build 186

Mode: WCDMA 1900, Right Head, Tilt, Mid.ch

Area Scan (7x12x1): Measurement grid: dx=15mm, dy=15mm
Zoom Scan (5x5x7)/Cube 0: Measurement grid: dx=8mm, dy=8mm, dz=5mm
Reference Value = 8.28 V/m
Peak SAR (extrapolated) = 0.128 W/kg
SAR(1 g) = 0.082 mW/g; SAR(10 g) = 0.048 mW/g

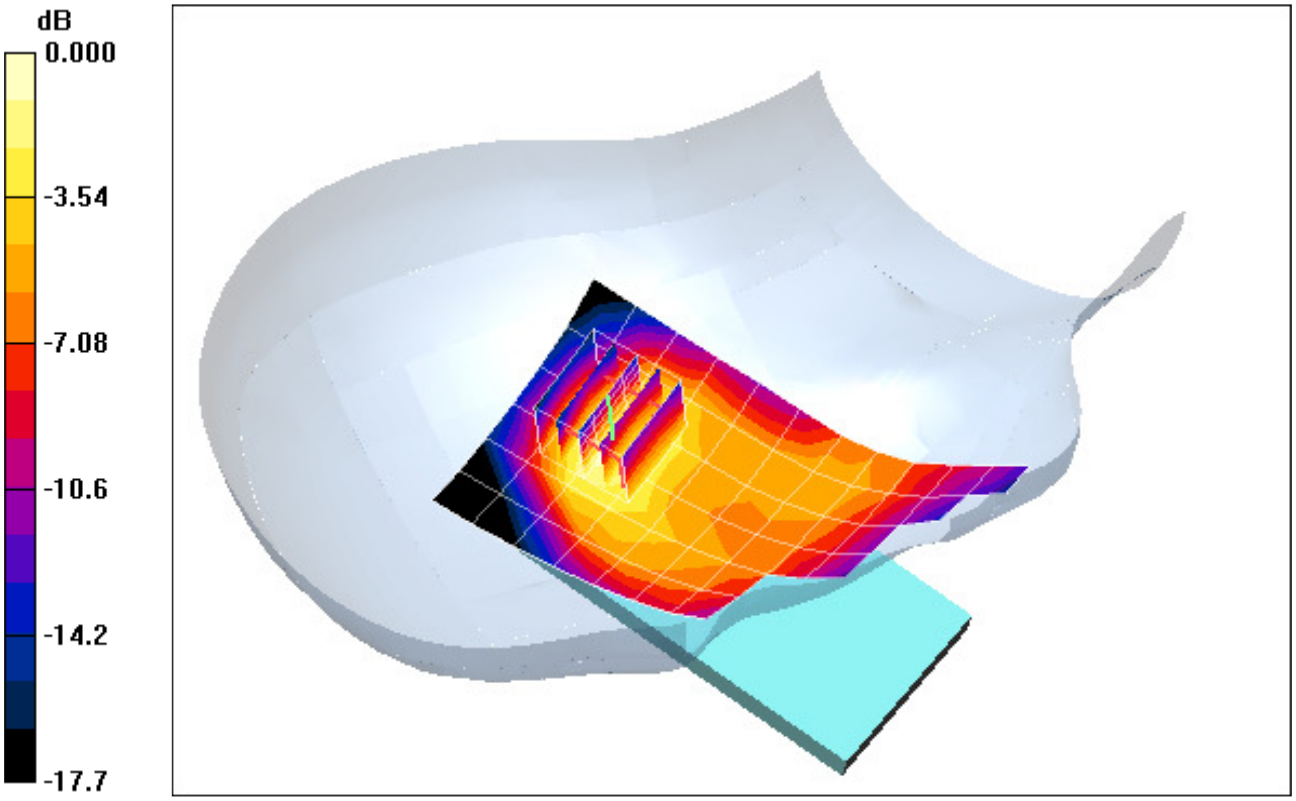

0 dB = 0.091mW/g

PCTEST ENGINEERING LABORATORY, INC.

DUT: A3LSGHI937; Type: 850/1900 GSM/GPRS/EDGE/WCDMA/HSPA Phone with Bluetooth and WLAN; Serial: FI-195-A

Communication System: WCDMA1900; Frequency: 1880 MHz;Duty Cycle: 1:1
Medium: 1900 Head Medium parameters used:
f = 1880 MHz; σ = 1.35 mho/m; ε_r = 41.5; ρ = 1000 kg/m^3
Phantom section: Left Section

Test Date: 08-10-2011; Ambient Temp: 23.4°C; Tissue Temp: 22.0°C

Probe: ES3DV2 - SN3022; ConvF(4.83, 4.83, 4.83); Calibrated: 9/21/2010
Sensor-Surface: 4mm (Mechanical Surface Detection)
Electronics: DAE4 Sn704; Calibrated: 3/17/2011
Phantom: SAM Sub Dasy B; Type: SAM 4.0; Serial: TP-1626
Measurement SW: DASY4, V4.7 Build 80; Postprocessing SW: SEMCAD, V1.8 Build 186

Mode: WCDMA 1900, Left Head, Touch, Mid.ch

Area Scan (7x12x1): Measurement grid: dx=15mm, dy=15mm
Zoom Scan (5x5x7)/Cube 0: Measurement grid: dx=8mm, dy=8mm, dz=5mm
Reference Value = 11.4 V/m
Peak SAR (extrapolated) = 0.239 W/kg
SAR(1 g) = 0.166 mW/g; SAR(10 g) = 0.108 mW/g

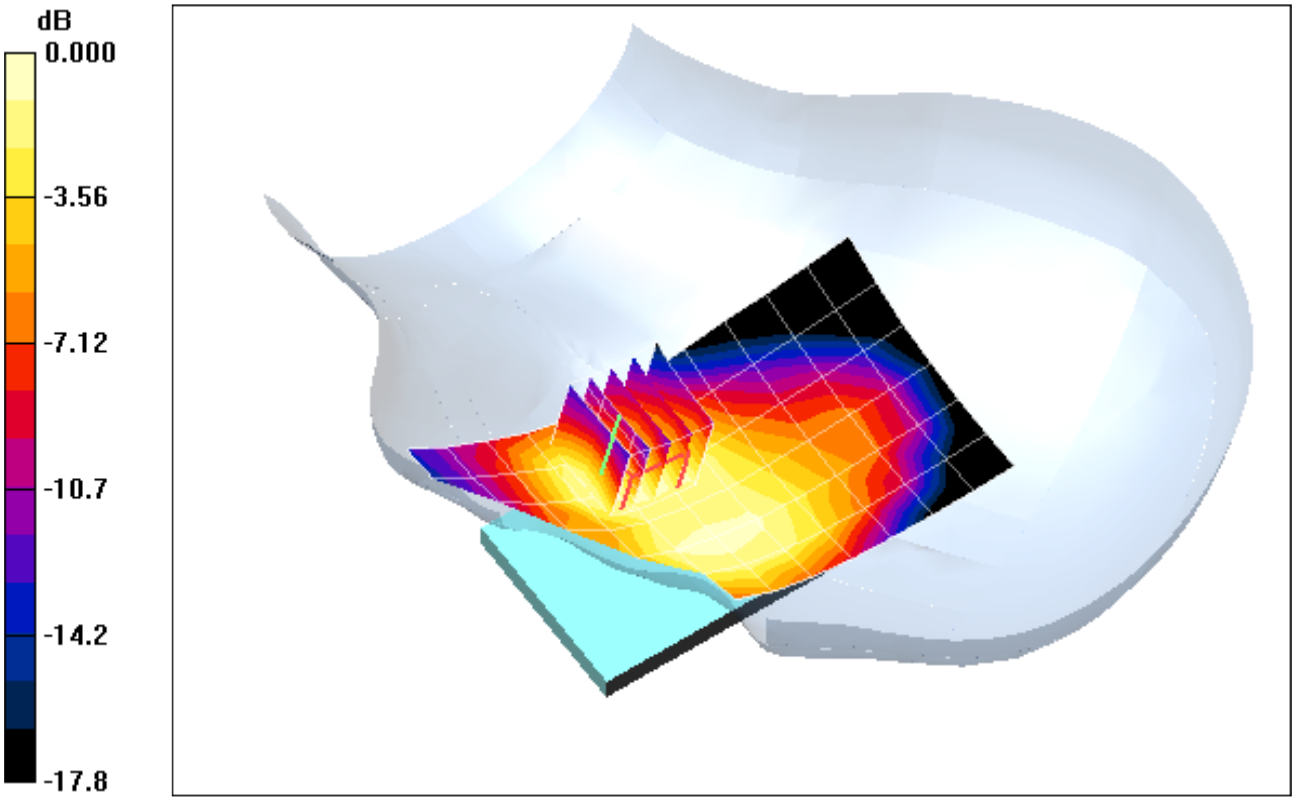

0 dB = 0.177mW/g

PCTEST ENGINEERING LABORATORY, INC.

DUT: A3LSGHI937; Type: 850/1900 GSM/GPRS/EDGE/WCDMA/HSPA Phone with Bluetooth and WLAN; Serial: FI-195-A

Communication System: WCDMA1900; Frequency: 1880 MHz;Duty Cycle: 1:1
Medium: 1900 Head Medium parameters used:
f = 1880 MHz; σ = 1.35 mho/m; ε_r = 41.5; ρ = 1000 kg/m^3
Phantom section: Left Section

Test Date: 08-10-2011; Ambient Temp: 23.4°C; Tissue Temp: 22.0°C

Probe: ES3DV2 - SN3022; ConvF(4.83, 4.83, 4.83); Calibrated: 9/21/2010
Sensor-Surface: 4mm (Mechanical Surface Detection)
Electronics: DAE4 Sn704; Calibrated: 3/17/2011
Phantom: SAM Sub Dasy B; Type: SAM 4.0; Serial: TP-1626
Measurement SW: DASY4, V4.7 Build 80; Postprocessing SW: SEMCAD, V1.8 Build 186

Mode: WCDMA 1900, Left Head, Tilt, Mid.ch

Area Scan (7x12x1): Measurement grid: dx=15mm, dy=15mm
Zoom Scan (5x5x7)/Cube 0: Measurement grid: dx=8mm, dy=8mm, dz=5mm
Reference Value = 9.00 V/m
Peak SAR (extrapolated) = 0.166 W/kg
SAR(1 g) = 0.107 mW/g; SAR(10 g) = 0.066 mW/g

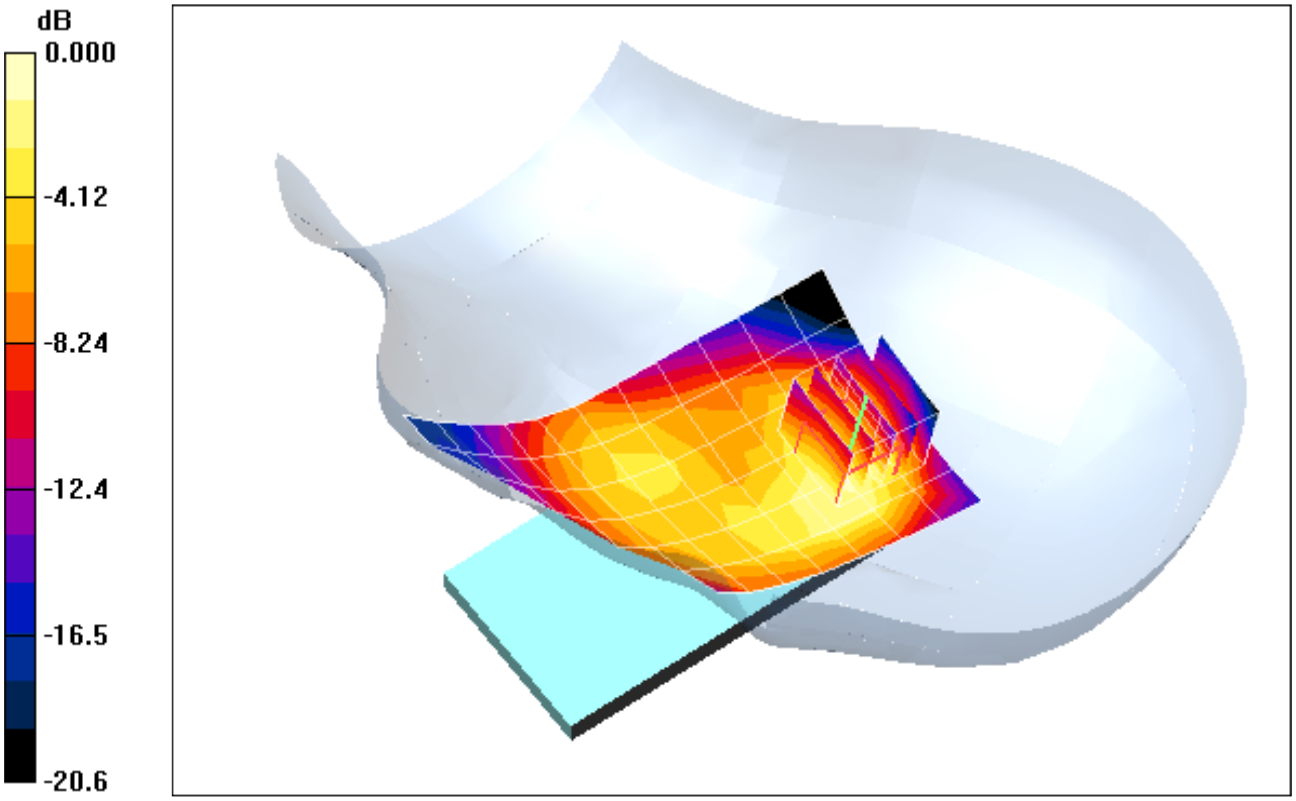

0 dB = 0.118mW/g

PCTEST ENGINEERING LABORATORY, INC.

DUT: A3LSGHI937; Type: 850/1900 GSM/GPRS/EDGE/WCDMA/HSPA Phone with Bluetooth and WLAN; Serial: FI-195-B

Communication System: IEEE 802.11b; Frequency: 2462 MHz;Duty Cycle: 1:1
Medium: 2450 Head Medium parameters used (interpolated):
f = 2462 MHz; σ = 1.89 mho/m; ε_r = 37.9; ρ = 1000 kg/m^3
Phantom section: Right Section

Test Date: 08-11-2011; Ambient Temp: 24.0°C; Tissue Temp: 22.9°C

Probe: ES3DV3 - SN3258; ConvF(4.5, 4.5, 4.5); Calibrated: 4/8/2011
Sensor-Surface: 3mm (Mechanical Surface Detection)
Electronics: DAE4 Sn649; Calibrated: 2/21/2011
Phantom: SAM Sub; Type: SAM 4.0; Serial: TP-1403
Measurement SW: DASY4, V4.7 Build 80; Postprocessing SW: SEMCAD, V1.8 Build 186

Mode: IEEE 802.11b, Right Head, Touch, Ch 11, 1 Mbps

Area Scan (7x12x1): Measurement grid: dx=15mm, dy=15mm
Zoom Scan (5x5x7)/Cube 0: Measurement grid: dx=8mm, dy=8mm, dz=5mm
Reference Value = 2.71 V/m
Peak SAR (extrapolated) = 0.019 W/kg
SAR(1 g) = 0.011 mW/g; SAR(10 g) = 0.00523 mW/g

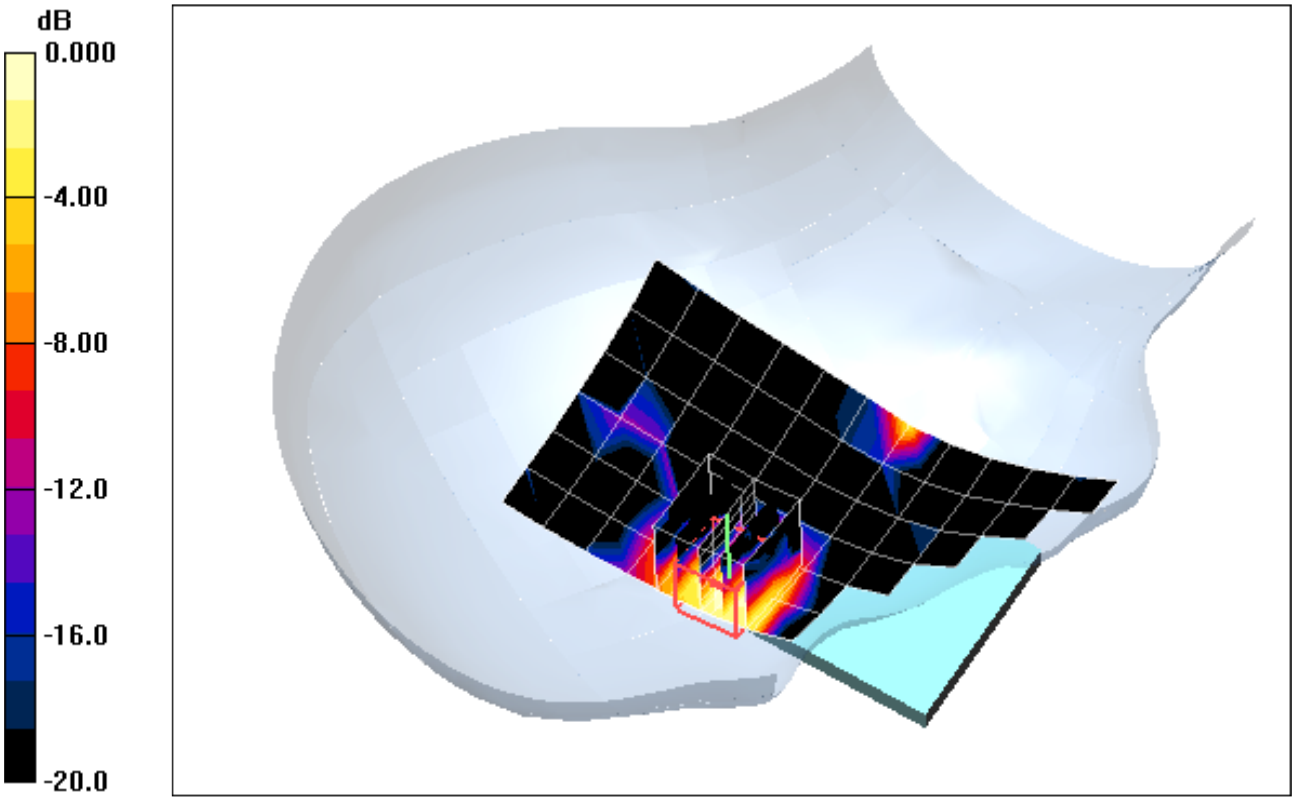

0 dB = 0.015mW/g

PCTEST ENGINEERING LABORATORY, INC.

DUT: A3LSGHI937; Type: 850/1900 GSM/GPRS/EDGE/WCDMA/HSPA Phone with Bluetooth and WLAN; Serial: FI-195-B

Communication System: IEEE 802.11b; Frequency: 2462 MHz;Duty Cycle: 1:1
Medium: 2450 Head Medium parameters used (interpolated):
f = 2462 MHz; σ = 1.89 mho/m; ε_r = 37.9; ρ = 1000 kg/m^3
Phantom section: Right Section

Test Date: 08-11-2011; Ambient Temp: 24.0°C; Tissue Temp: 22.9°C

Probe: ES3DV3 - SN3258; ConvF(4.5, 4.5, 4.5); Calibrated: 4/8/2011
Sensor-Surface: 3mm (Mechanical Surface Detection)
Electronics: DAE4 Sn649; Calibrated: 2/21/2011
Phantom: SAM Sub; Type: SAM 4.0; Serial: TP-1403
Measurement SW: DASY4, V4.7 Build 80; Postprocessing SW: SEMCAD, V1.8 Build 186

Mode: IEEE 802.11b, Right Head, Tilt, Ch 11, 1 Mbps

Area Scan (7x12x1): Measurement grid: dx=15mm, dy=15mm
Zoom Scan (5x5x7)/Cube 0: Measurement grid: dx=8mm, dy=8mm, dz=5mm
Reference Value = 1.51 V/m
Peak SAR (extrapolated) = 0.011 W/kg
SAR(1 g) = 0.00441 mW/g; SAR(10 g) = 0.00156 mW/g

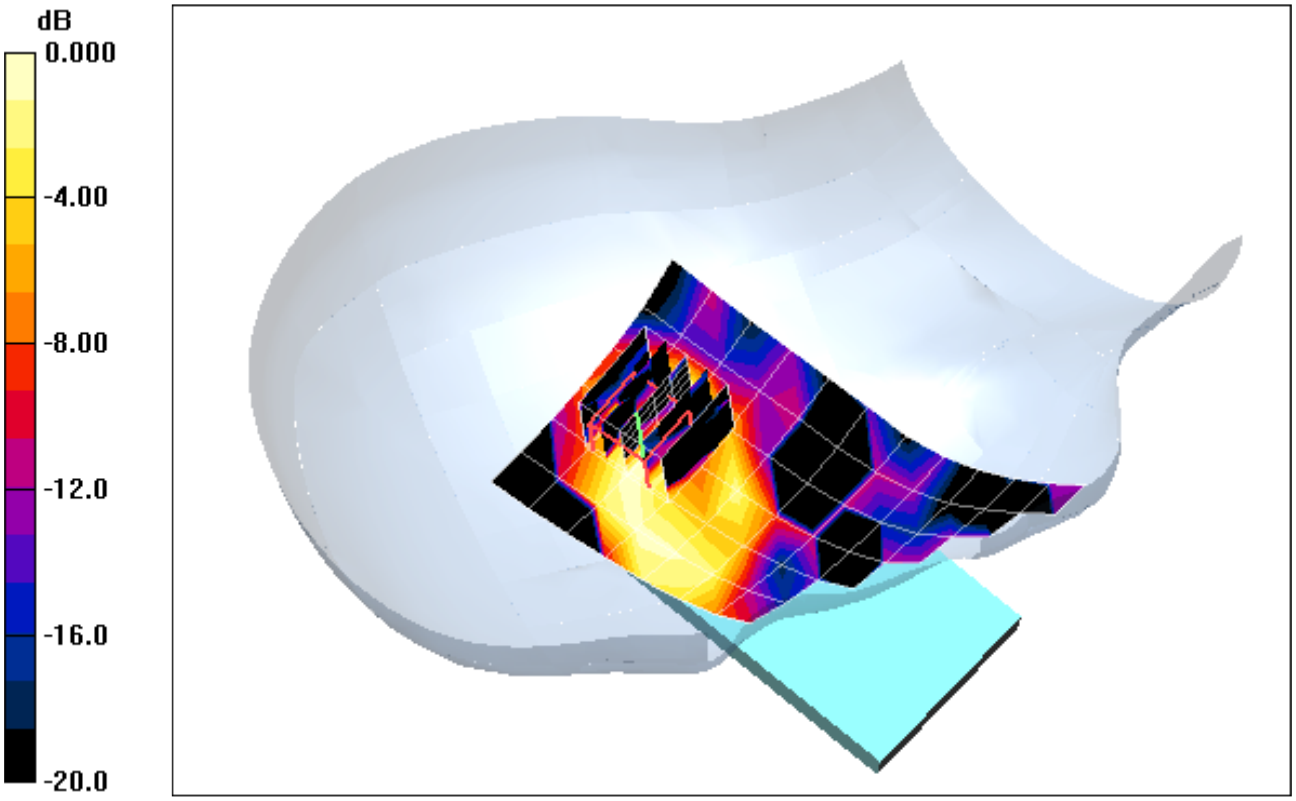

0 dB = 0.006mW/g

PCTEST ENGINEERING LABORATORY, INC.

DUT: A3LSGHI937; Type: 850/1900 GSM/GPRS/EDGE/WCDMA/HSPA Phone with Bluetooth and WLAN; Serial: FI-195-B

Communication System: IEEE 802.11b; Frequency: 2462 MHz;Duty Cycle: 1:1
Medium: 2450 Head Medium parameters used (interpolated):
f = 2462 MHz; σ = 1.89 mho/m; ε_r = 37.9; ρ = 1000 kg/m^3
Phantom section: Left Section

Test Date: 08-11-2011; Ambient Temp: 24.0°C; Tissue Temp: 22.9°C

Probe: ES3DV3 - SN3258; ConvF(4.5, 4.5, 4.5); Calibrated: 4/8/2011
Sensor-Surface: 3mm (Mechanical Surface Detection)
Electronics: DAE4 Sn649; Calibrated: 2/21/2011
Phantom: SAM Sub; Type: SAM 4.0; Serial: TP-1403
Measurement SW: DASY4, V4.7 Build 80; Postprocessing SW: SEMCAD, V1.8 Build 186

Mode: IEEE 802.11b, Left Head, Touch, Ch 11, 1 Mbps

Area Scan (8x12x1): Measurement grid: dx=15mm, dy=15mm
Zoom Scan (5x5x7)/Cube 0: Measurement grid: dx=8mm, dy=8mm, dz=5mm
Reference Value = 0.812 V/m
Peak SAR (extrapolated) = 0.057 W/kg
SAR(1 g) = 0.028 mW/g; SAR(10 g) = 0.012 mW/g

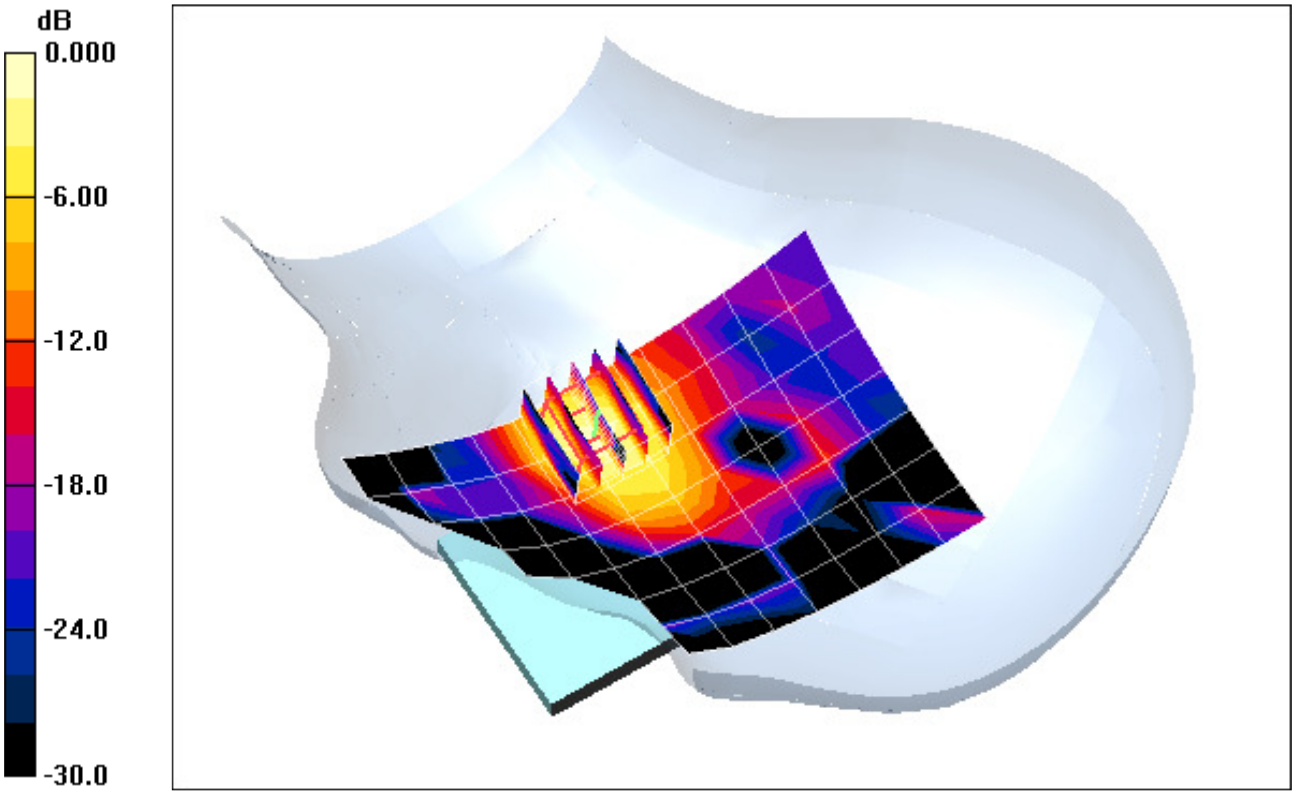

0 dB = 0.038mW/g

PCTEST ENGINEERING LABORATORY, INC.

DUT: A3LSGHI937; Type: 850/1900 GSM/GPRS/EDGE/WCDMA/HSPA Phone with Bluetooth and WLAN; Serial: FI-195-B

Communication System: IEEE 802.11b; Frequency: 2462 MHz;Duty Cycle: 1:1
Medium: 2450 Head Medium parameters used (interpolated):
f = 2462 MHz; σ = 1.89 mho/m; ε_r = 37.9; ρ = 1000 kg/m^3
Phantom section: Left Section

Test Date: 08-11-2011; Ambient Temp: 24.0°C; Tissue Temp: 22.9°C

Probe: ES3DV3 - SN3258; ConvF(4.5, 4.5, 4.5); Calibrated: 4/8/2011
Sensor-Surface: 3mm (Mechanical Surface Detection)
Electronics: DAE4 Sn649; Calibrated: 2/21/2011
Phantom: SAM Sub; Type: SAM 4.0; Serial: TP-1403
Measurement SW: DASY4, V4.7 Build 80; Postprocessing SW: SEMCAD, V1.8 Build 186

Mode: IEEE 802.11b, Left Head, Touch, Ch 11, 1 Mbps

Area Scan (8x12x1): Measurement grid: dx=15mm, dy=15mm
Zoom Scan (5x5x7)/Cube 0: Measurement grid: dx=8mm, dy=8mm, dz=5mm
Reference Value = 0.812 V/m
Peak SAR (extrapolated) = 0.057 W/kg
SAR(1 g) = 0.028 mW/g; SAR(10 g) = 0.012 mW/g

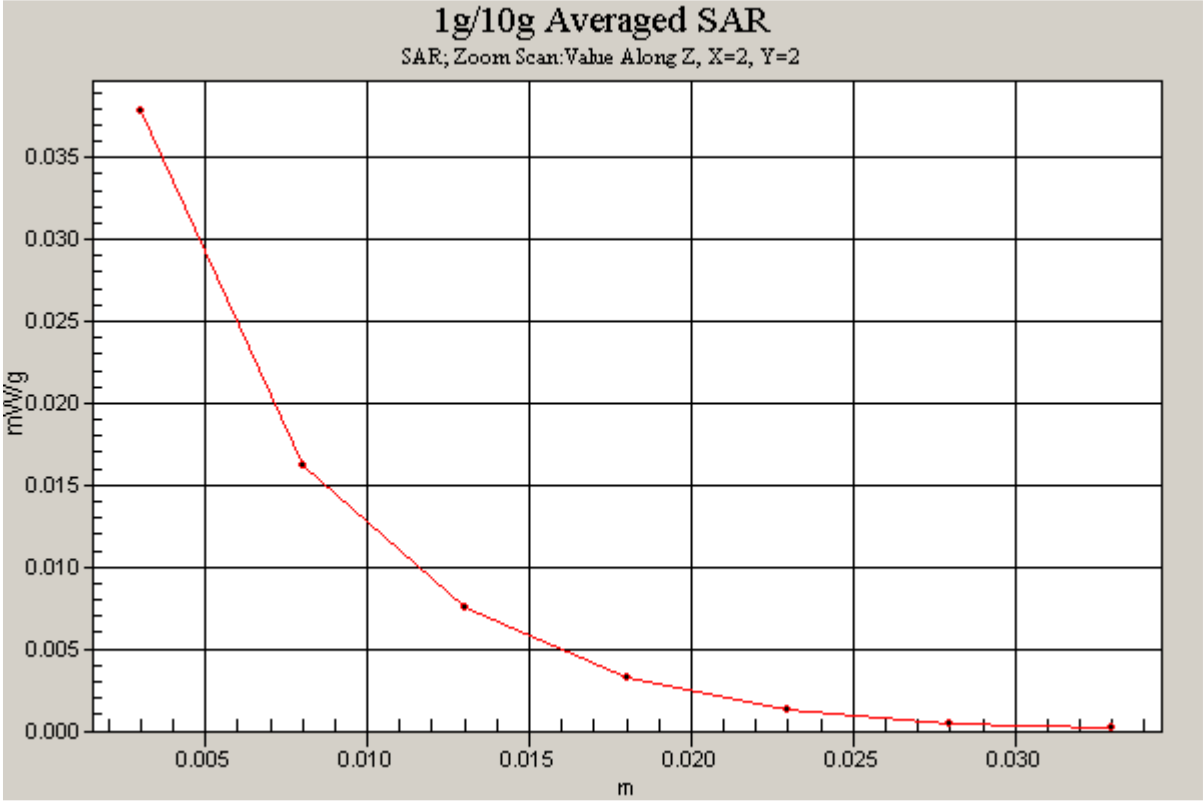

PCTEST ENGINEERING LABORATORY, INC.

DUT: A3LSGHI937; Type: 850/1900 GSM/GPRS/EDGE/WCDMA/HSPA Phone with Bluetooth and WLAN; Serial: FI-195-B

Communication System: IEEE 802.11b; Frequency: 2462 MHz;Duty Cycle: 1:1
Medium: 2450 Head Medium parameters used (interpolated):
f = 2462 MHz; σ = 1.89 mho/m; ε_r = 37.9; ρ = 1000 kg/m^3
Phantom section: Left Section

Test Date: 08-11-2011; Ambient Temp: 24.0°C; Tissue Temp: 22.9°C

Probe: ES3DV3 - SN3258; ConvF(4.5, 4.5, 4.5); Calibrated: 4/8/2011
Sensor-Surface: 3mm (Mechanical Surface Detection)
Electronics: DAE4 Sn649; Calibrated: 2/21/2011
Phantom: SAM Sub; Type: SAM 4.0; Serial: TP-1403
Measurement SW: DASY4, V4.7 Build 80; Postprocessing SW: SEMCAD, V1.8 Build 186

Mode: IEEE 802.11b, Left Head, Tilt, Ch 11, 1 Mbps

Area Scan (7x11x1): Measurement grid: dx=15mm, dy=15mm
Zoom Scan (5x5x7)/Cube 0: Measurement grid: dx=8mm, dy=8mm, dz=5mm
Reference Value = 1.76 V/m
Peak SAR (extrapolated) = 0.020 W/kg
SAR(1 g) = 0.00504 mW/g; SAR(10 g) = 0.00172 mW/g

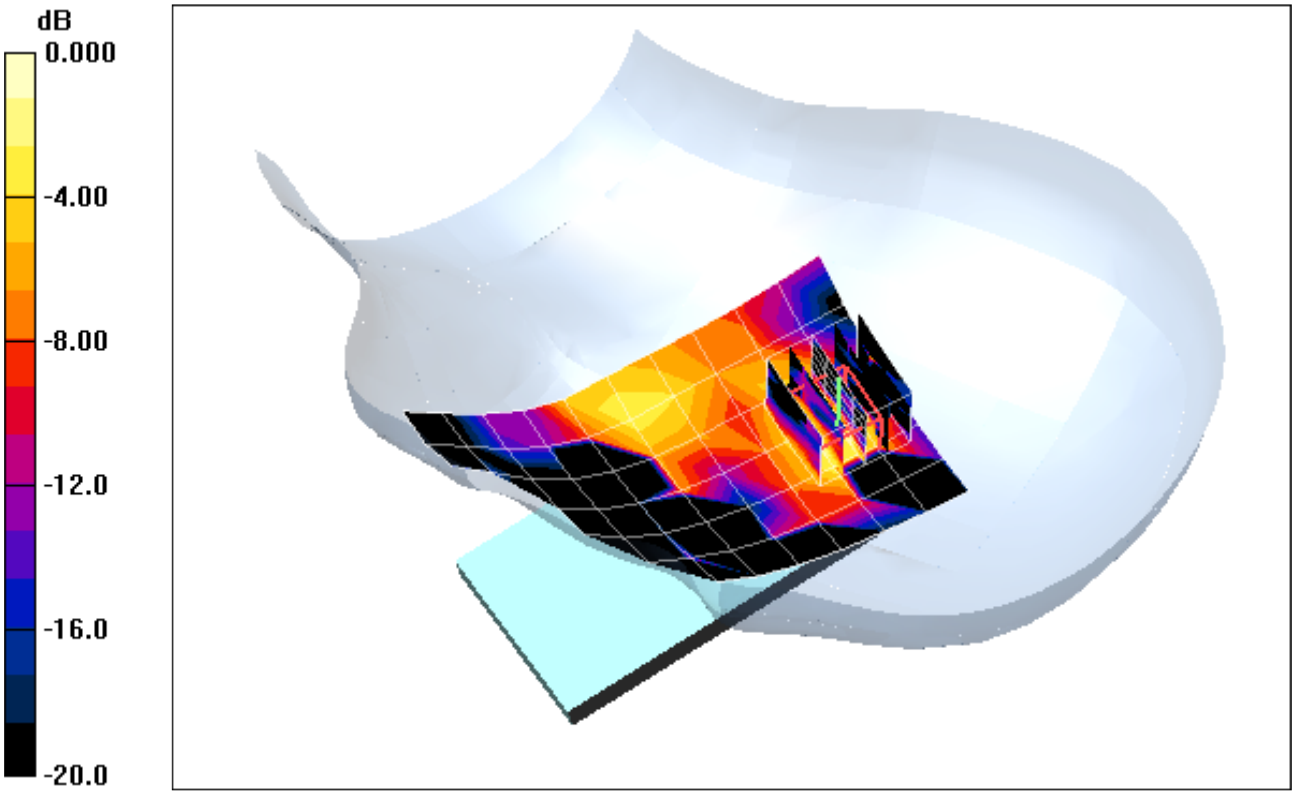

0 dB = 0.007mW/g

PCTEST ENGINEERING LABORATORY, INC.

DUT: A3LSGHI937; Type: 850/1900 GSM/GPRS/EDGE/WCDMA/HSPA Phone with Bluetooth and WLAN; Serial: FI-195-A

Communication System: IEEE 802.11a 5.2-5.8 GHz Band; Frequency: 5200 MHz;Duty Cycle: 1:1
Medium: 5 GHz Head Medium parameters used (interpolated):
f = 5200 MHz; σ = 4.61 mho/m; ε_r = 35; ρ = 1000 kg/m^3
Phantom section: Right Section

Test Date: 08-09-2011; Ambient Temp: 23.3°C; Tissue Temp: 21.8°C

Probe: EX3DV4 - SN3550; ConvF(4.06, 4.06, 4.06); Calibrated: 2/14/2011
Sensor-Surface: 2mm (Mechanical Surface Detection)
Electronics: DAE4 Sn665; Calibrated: 4/20/2011
Phantom: SAM Main; Type: SAM 4.0; Serial: TP-1114
Measurement SW: DASY4, V4.7 Build 80; Postprocessing SW: SEMCAD, V1.8 Build 186

Mode: IEEE 802.11a 5.2 GHz, Right Head, Touch, Ch 40, 6 Mbps

Area Scan (12x16x1): Measurement grid: dx=10mm, dy=10mm
Zoom Scan (7x7x11)/Cube 0: Measurement grid: dx=4mm, dy=4mm, dz=2mm
Reference Value = 1.45 V/m
Peak SAR (extrapolated) = 0.257 W/kg
SAR(1 g) = 0.017 mW/g; SAR(10 g) = 0.00265 mW/g

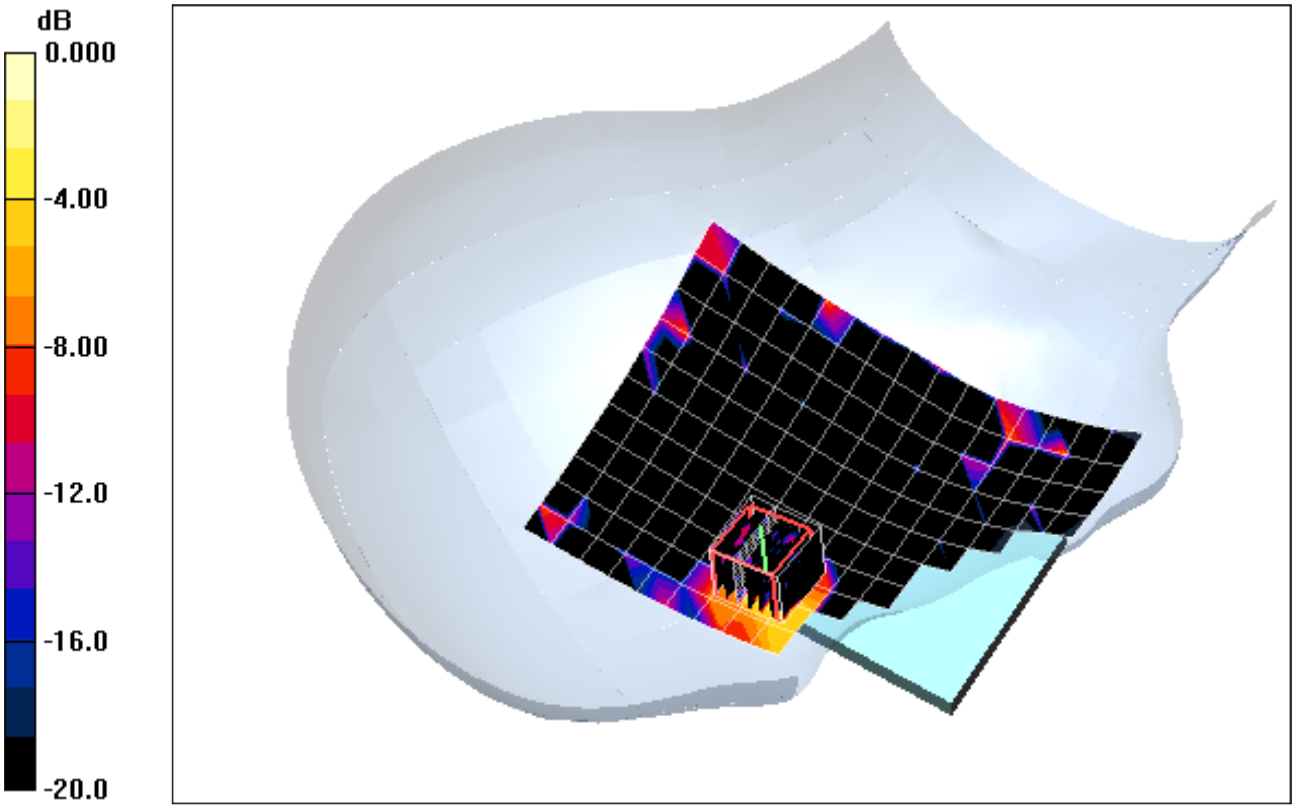

0 dB = 0.031mW/g

PCTEST ENGINEERING LABORATORY, INC.

DUT: A3LSGHI937; Type: 850/1900 GSM/GPRS/EDGE/WCDMA/HSPA Phone with Bluetooth and WLAN; Serial: FI-195-A

Communication System: IEEE 802.11a 5.2-5.8 GHz Band; Frequency: 5200 MHz;Duty Cycle: 1:1
Medium: 5 GHz Head Medium parameters used (interpolated):
f = 5200 MHz; σ = 4.61 mho/m; ε_r = 35; ρ = 1000 kg/m^3
Phantom section: Right Section

Test Date: 08-09-2011; Ambient Temp: 23.3°C; Tissue Temp: 21.8°C

Probe: EX3DV4 - SN3550; ConvF(4.06, 4.06, 4.06); Calibrated: 2/14/2011
Sensor-Surface: 2mm (Mechanical Surface Detection)
Electronics: DAE4 Sn665; Calibrated: 4/20/2011
Phantom: SAM Main; Type: SAM 4.0; Serial: TP-1114
Measurement SW: DASY4, V4.7 Build 80; Postprocessing SW: SEMCAD, V1.8 Build 186

Mode: IEEE 802.11a 5.2 GHz, Right Head, Tilt, Ch 40, 6 Mbps

Area Scan (12x16x1): Measurement grid: dx=10mm, dy=10mm
Zoom Scan (7x7x11)/Cube 0: Measurement grid: dx=4mm, dy=4mm, dz=2mm
Reference Value = 2.14 V/m
Peak SAR (extrapolated) = 0.295 W/kg
SAR(1 g) = 0.021 mW/g; SAR(10 g) = 0.0034 mW/g

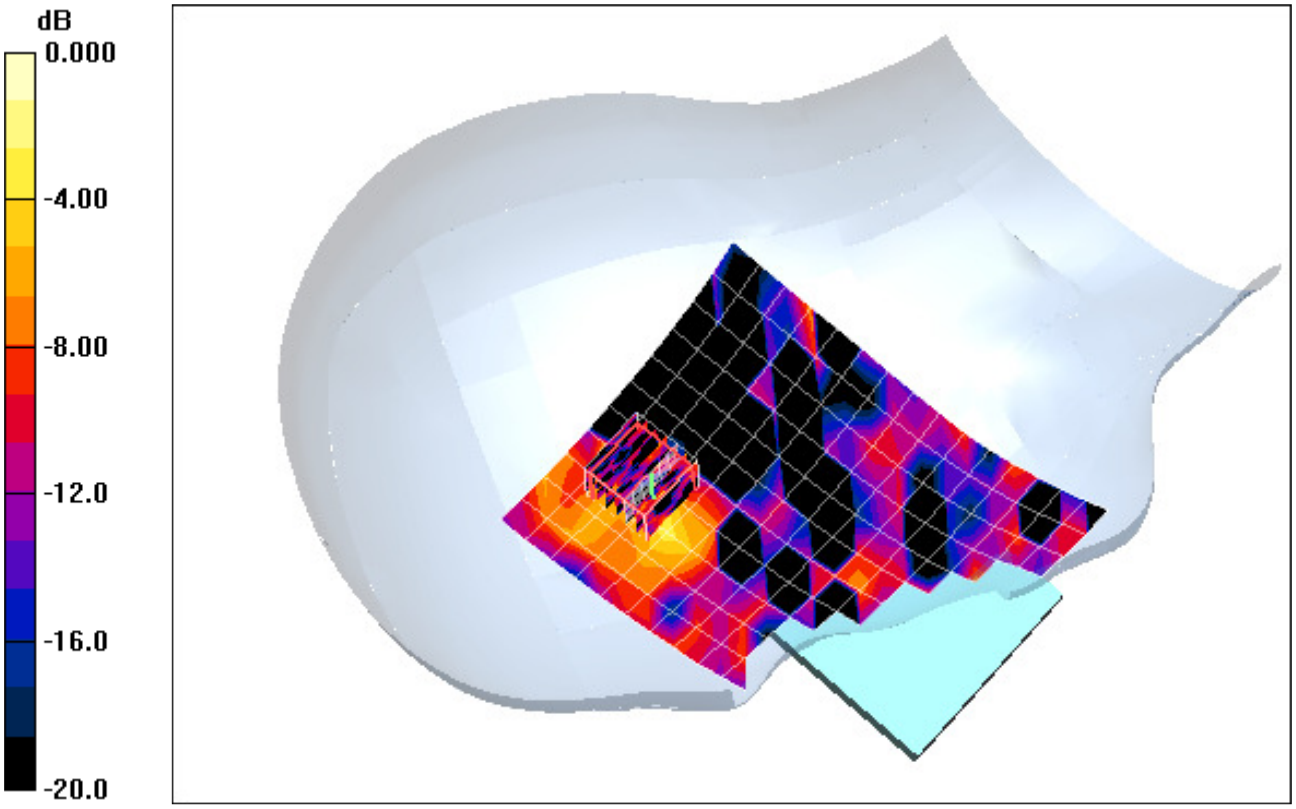

0 dB = 0.041mW/g

PCTEST ENGINEERING LABORATORY, INC.

DUT: A3LSGHI937; Type: 850/1900 GSM/GPRS/EDGE/WCDMA/HSPA Phone with Bluetooth and WLAN; Serial: FI-195-A

Communication System: IEEE 802.11a 5.2-5.8 GHz Band; Frequency: 5200 MHz;Duty Cycle: 1:1
Medium: 5 GHz Head Medium parameters used (interpolated):
f = 5200 MHz; σ = 4.61 mho/m; ε_r = 35; ρ = 1000 kg/m^3
Phantom section: Left Section

Test Date: 08-09-2011; Ambient Temp: 23.3°C; Tissue Temp: 21.8°C

Probe: EX3DV4 - SN3550; ConvF(4.06, 4.06, 4.06); Calibrated: 2/14/2011
Sensor-Surface: 2mm (Mechanical Surface Detection)
Electronics: DAE4 Sn665; Calibrated: 4/20/2011
Phantom: SAM Main; Type: SAM 4.0; Serial: TP-1114
Measurement SW: DASY4, V4.7 Build 80; Postprocessing SW: SEMCAD, V1.8 Build 186

Mode: IEEE 802.11a, 5.2 GHz Left Head, Touch, Ch 40, 6 Mbps

Area Scan (10x17x1): Measurement grid: dx=10mm, dy=10mm
Zoom Scan (7x7x11)/Cube 0: Measurement grid: dx=4mm, dy=4mm, dz=2mm
Reference Value = 1.62 V/m
Peak SAR (extrapolated) = 0.236 W/kg
SAR(1 g) = 0.015 mW/g; SAR(10 g) = 0.00228 mW/g

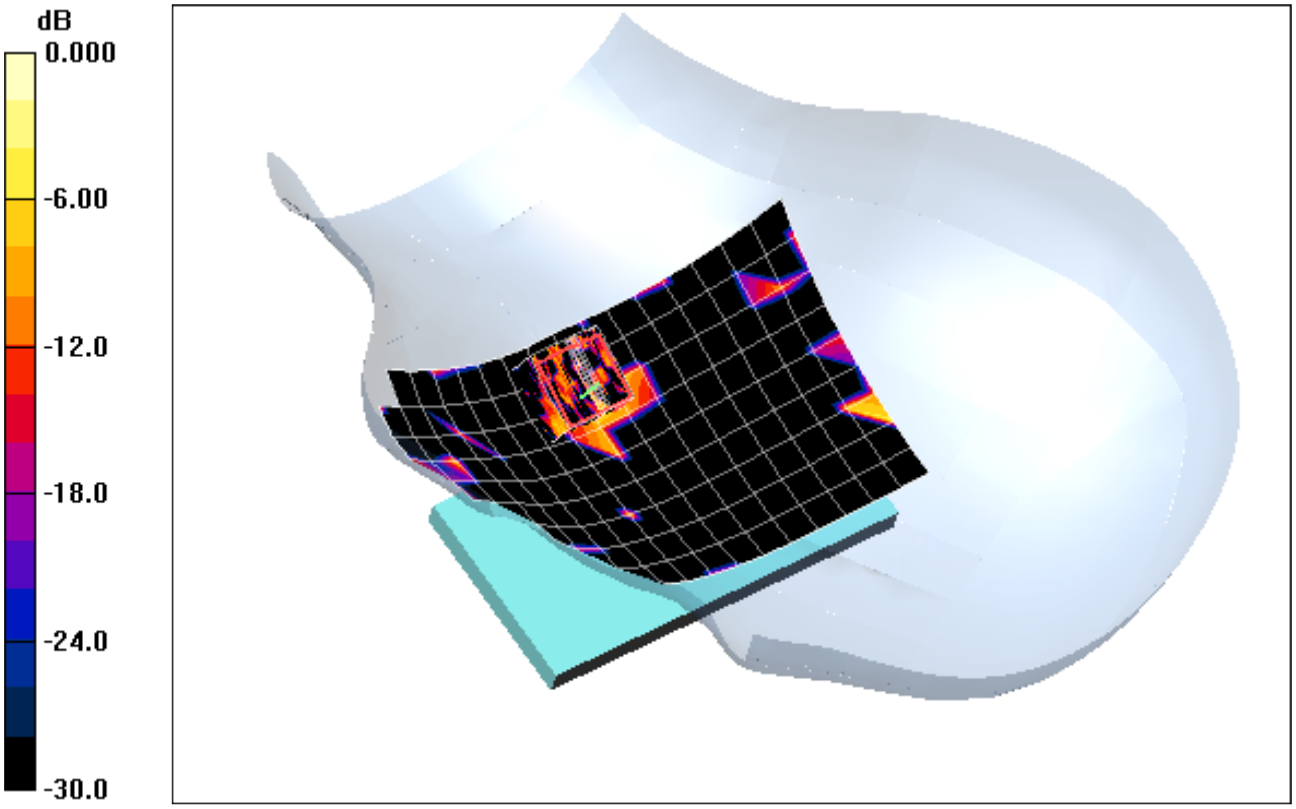

0 dB = 0.029mW/g

PCTEST ENGINEERING LABORATORY, INC.

DUT: A3LSGHI937; Type: 850/1900 GSM/GPRS/EDGE/WCDMA/HSPA Phone with Bluetooth and WLAN; Serial: FI-195-A

Communication System: IEEE 802.11a 5.2-5.8 GHz Band; Frequency: 5785 MHz;Duty Cycle: 1:1
Medium: 5 GHz Head Medium parameters used (interpolated):
f = 5785 MHz; σ = 5.31 mho/m; ε_r = 34; ρ = 1000 kg/m^3
Phantom section: Left Section

Test Date: 08-09-2011; Ambient Temp: 23.5 °C; Tissue Temp: 21.6 °C

Probe: EX3DV4 - SN3550; ConvF(3.64, 3.64, 3.64); Calibrated: 2/14/2011
Sensor-Surface: 2mm (Mechanical Surface Detection)
Electronics: DAE4 Sn665; Calibrated: 4/20/2011
Phantom: SAM Main; Type: SAM 4.0; Serial: TP-1114
Measurement SW: DASY4, V4.7 Build 80; Postprocessing SW: SEMCAD, V1.8 Build 186

Mode: IEEE 802.11a, 5.8 GHz Left Head, Tilt, Ch 157, 6 Mbps

Area Scan (11x14x1): Measurement grid: dx=10mm, dy=10mm
Zoom Scan (7x7x11)/Cube 0: Measurement grid: dx=4mm, dy=4mm, dz=2mm
Reference Value = 0.559 V/m
Peak SAR (extrapolated) = 0.024 W/kg
SAR(1 g) = 0.000679 mW/g; SAR(10 g) = 0.000105 mW/g

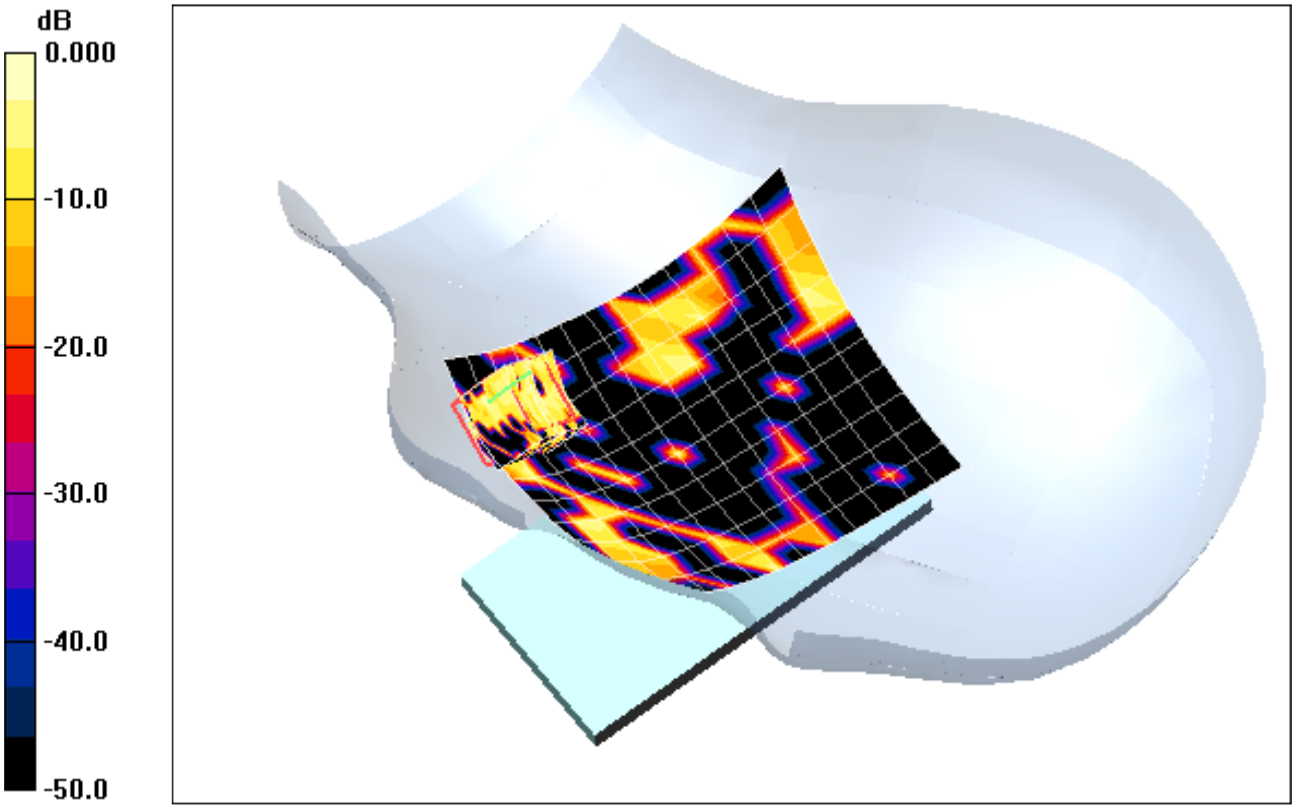

0 dB = 0.016mW/g

PCTEST ENGINEERING LABORATORY, INC.

DUT: Dipole 5800 MHz; Type: D5GHzV2; Serial: 1057

Communication System: CW; Frequency: 5800 MHz;Duty Cycle: 1:1
Medium: 5 GHz Head; Medium parameters used (interpolated):
f = 5800 MHz; σ = 5.32 mho/m; ε_r = 33.9; ρ = 1000 kg/m^3
Phantom section: Flat Section; Space: 1.0 cm

Test Date: 08-09-2011; Ambient Temp: 23.5 °C; Tissue Temp: 21.6 °C

Probe: EX3DV4 - SN3550; ConvF(3.64, 3.64, 3.64); Calibrated: 2/14/2011
Sensor-Surface: 2mm (Mechanical Surface Detection)
Electronics: DAE4 Sn665; Calibrated: 4/20/2011
Phantom: SAM Main; Type: SAM 4.0; Serial: TP-1114
Measurement SW: DASY4, V4.7 Build 80; Postprocessing SW: SEMCAD, V1.8 Build 186

5800MHz System Verification

Area Scan (7x9x1): Measurement grid: dx=10mm, dy=10mm
Zoom Scan (7x7x11)/Cube 0: Measurement grid: dx=4mm, dy=4mm, dz=2mm
Input Power = 20.0 dBm (100 mW)
SAR(1 g) = 8.47 mW/g; SAR(10 g) = 2.36 mW/g
Deviation = 2.17 %

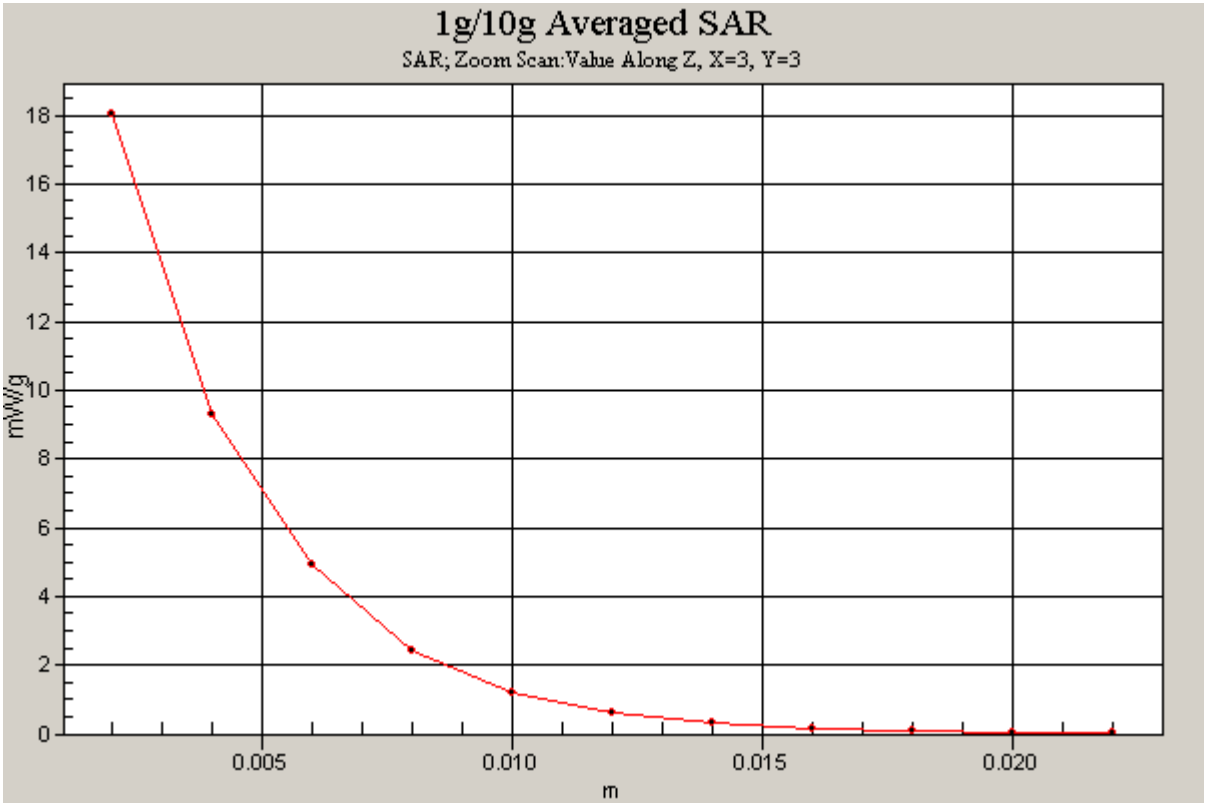

PCTEST ENGINEERING LABORATORY, INC.

DUT: A3LSGHI937; Type: 850/1900 GSM/GPRS/EDGE/WCDMA/HSPA Phone with Bluetooth and WLAN; Serial: FI-195-A

Communication System: GSM850; Frequency: 836.6 MHz;Duty Cycle: 1:8.3
Medium: 835 Body Medium parameters used (interpolated):
f = 836.6 MHz; σ = 0.972 mho/m; ε_r = 54.9; ρ = 1000 kg/m^3
Phantom section: Flat Section; Space: 1.0 cm

Test Date: 08-09-2011; Ambient Temp: 24.3°C; Tissue Temp: 23.2°C

Probe: EX3DV4 - SN3550; ConvF(8.11, 8.11, 8.11); Calibrated: 2/14/2011
Sensor-Surface: 4mm (Mechanical Surface Detection)
Electronics: DAE4 Sn665; Calibrated: 4/20/2011
Phantom: SAM Sub; Type: SAM 4.0; Serial: TP-1357
Measurement SW: DASY4, V4.7 Build 80; Postprocessing SW: SEMCAD, V1.8 Build 186

Mode: GSM 850, Body SAR, Back side, Mid.ch

Area Scan (7x12x1): Measurement grid: dx=15mm, dy=15mm
Zoom Scan (5x5x7)/Cube 0: Measurement grid: dx=8mm, dy=8mm, dz=5mm
Reference Value = 22.7 V/m
Peak SAR (extrapolated) = 0.587 W/kg
SAR(1 g) = 0.447 mW/g; SAR(10 g) = 0.325 mW/g

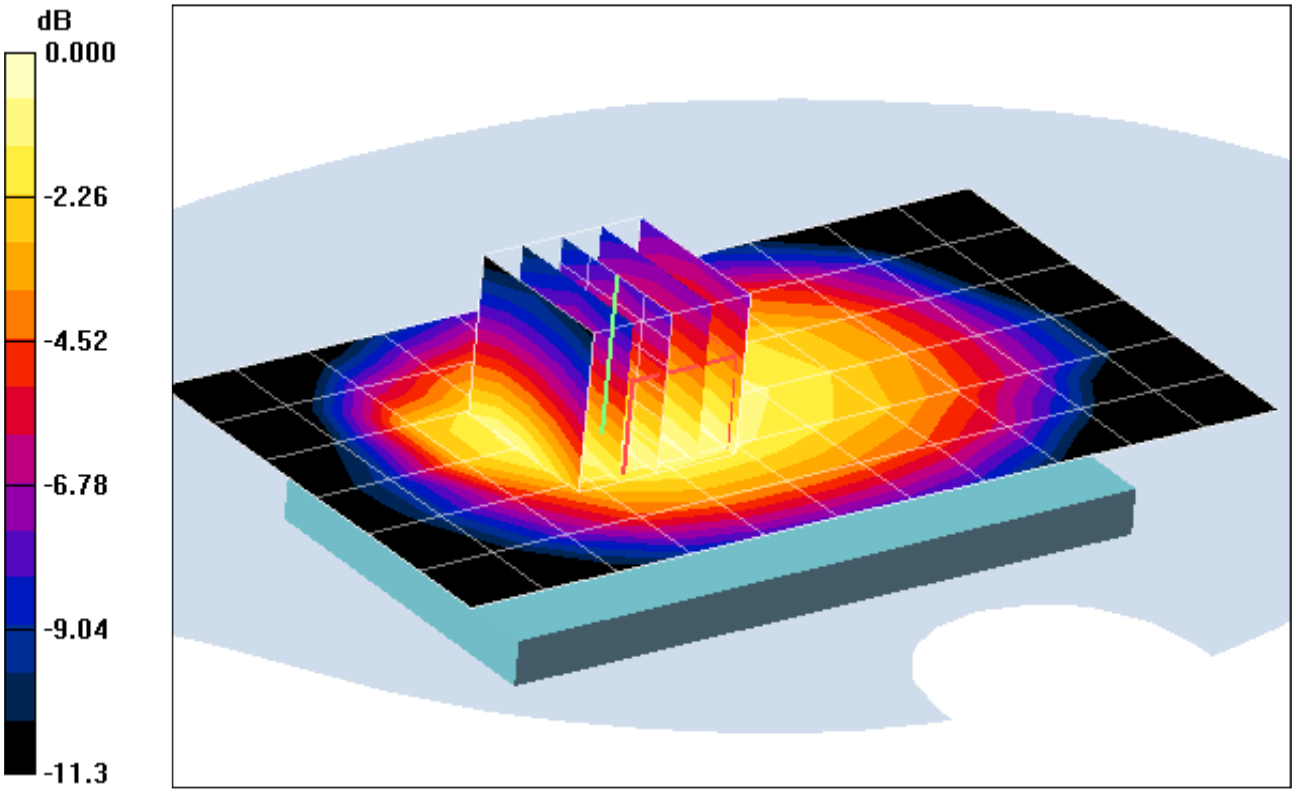

0 dB = 0.489mW/g

PCTEST ENGINEERING LABORATORY, INC.

DUT: A3LSGHI937; Type: 850/1900 GSM/GPRS/EDGE/WCDMA/HSPA Phone with Bluetooth and WLAN; Serial: FI-195-A

Communication System: GSM850 GPRS; 2 Tx slots; Frequency: 836.6 MHz;Duty Cycle: 1:4.15
Medium: 835 Body Medium parameters used (interpolated):
f = 836.6 MHz; σ = 0.972 mho/m; ε_r = 54.9; ρ = 1000 kg/m^3
Phantom section: Flat Section; Space 1.0 cm

Test Date: 08-09-2011; Ambient Temp: 24.3°C; Tissue Temp: 23.2°C

Probe: EX3DV4 - SN3550; ConvF(8.11, 8.11, 8.11); Calibrated: 2/14/2011
Sensor-Surface: 4mm (Mechanical Surface Detection)
Electronics: DAE4 Sn665; Calibrated: 4/20/2011
Phantom: SAM Sub; Type: SAM 4.0; Serial: TP-1357
Measurement SW: DASY4, V4.7 Build 80; Postprocessing SW: SEMCAD, V1.8 Build 186

Mode: GPRS 850, Body SAR, Back side, Mid.ch, 2 Tx Slots

Area Scan (7x11x1): Measurement grid: dx=15mm, dy=15mm
Zoom Scan (5x5x7)/Cube 0: Measurement grid: dx=8mm, dy=8mm, dz=5mm
Reference Value = 34.4 V/m
Peak SAR (extrapolated) = 1.43 W/kg
SAR(1 g) = 1.12 mW/g; SAR(10 g) = 0.840 mW/g

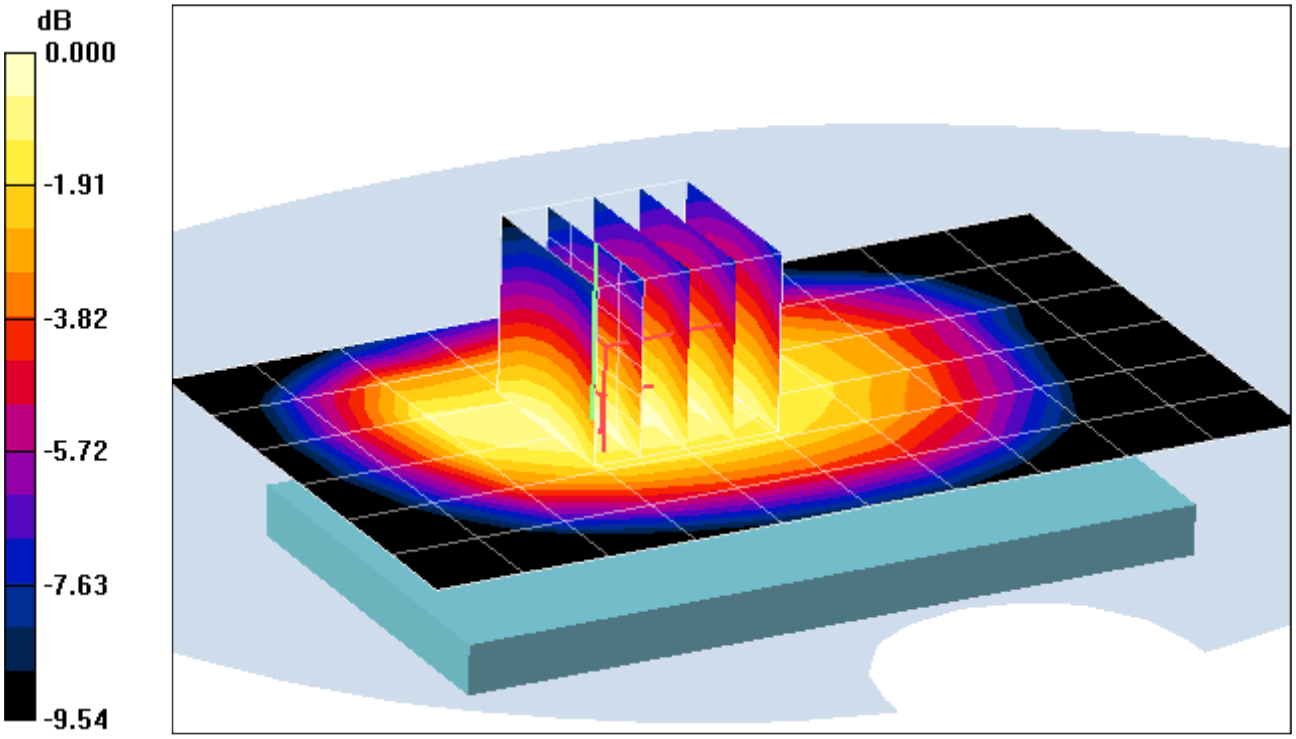

0 dB = 1.17mW/g

PCTEST ENGINEERING LABORATORY, INC.

DUT: A3LSGHI937; Type: 850/1900 GSM/GPRS/EDGE/WCDMA/HSPA Phone with Bluetooth and WLAN; Serial: FI-195-A

Communication System: GSM850 GPRS; 2 Tx slots; Frequency: 836.6 MHz;Duty Cycle: 1:4.15
Medium: 835 Body; Medium parameters used (interpolated):
f = 836.6 MHz; σ = 0.972 mho/m; ε_r = 54.9; ρ = 1000 kg/m^3
Phantom section: Flat Section; Space: 1.0 cm

Test Date: 08-09-2011; Ambient Temp: 24.3°C; Tissue Temp: 23.2°C

Probe: EX3DV4 - SN3550; ConvF(8.11, 8.11, 8.11); Calibrated: 2/14/2011
Sensor-Surface: 4mm (Mechanical Surface Detection)
Electronics: DAE4 Sn665; Calibrated: 4/20/2011
Phantom: SAM Sub; Type: SAM 4.0; Serial: TP-1357
Measurement SW: DASY4, V4.7 Build 80; Postprocessing SW: SEMCAD, V1.8 Build 186

Mode: GPRS 850, Body SAR, Back side, Mid.ch, 2 Tx Slots

Area Scan (7x11x1): Measurement grid: dx=15mm, dy=15mm
Zoom Scan (5x5x7)/Cube 0: Measurement grid: dx=8mm, dy=8mm, dz=5mm
Reference Value = 34.4 V/m
Peak SAR (extrapolated) = 1.43 W/kg
SAR(1 g) = 1.12 mW/g; SAR(10 g) = 0.840 mW/g

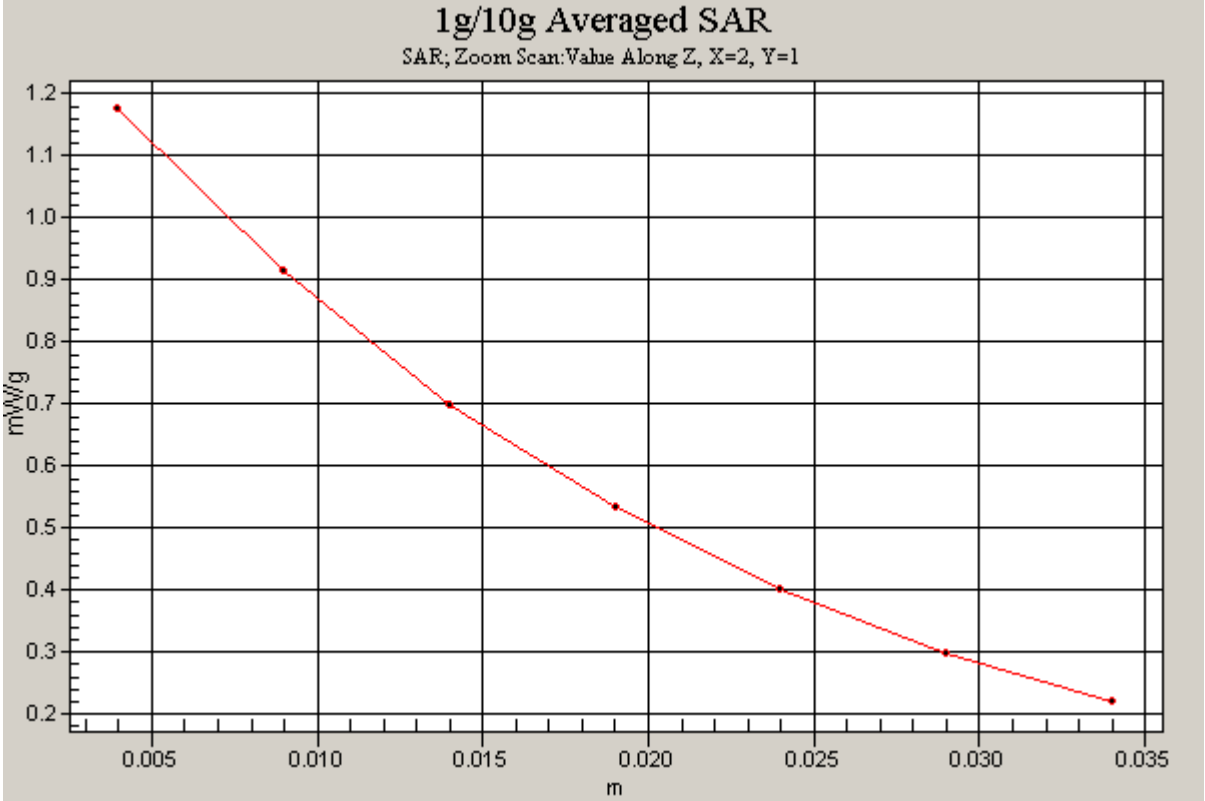

PCTEST ENGINEERING LABORATORY, INC.

DUT: A3LSGHI937; Type: 850/1900 GSM/GPRS/EDGE/WCDMA/HSPA Phone with Bluetooth and WLAN; Serial: FI-195-A

Communication System: GSM850 GPRS; 2 Tx slots; Frequency: 836.6 MHz;Duty Cycle: 1:4.15
Medium: 835 Body; Medium parameters used (interpolated):
f = 836.6 MHz; σ = 0.972 mho/m; ε_r = 54.9; ρ = 1000 kg/m^3
Phantom section: Flat ; Space: 1.0 cm

Test Date: 08-09-2011; Ambient Temp: 24.3°C; Tissue Temp: 23.2°C

Probe: EX3DV4 - SN3550; ConvF(8.11, 8.11, 8.11); Calibrated: 2/14/2011
Sensor-Surface: 4mm (Mechanical Surface Detection)
Electronics: DAE4 Sn665; Calibrated: 4/20/2011
Phantom: SAM Sub; Type: SAM 4.0; Serial: TP-1357
Measurement SW: DASY4, V4.7 Build 80; Postprocessing SW: SEMCAD, V1.8 Build 186

Mode: GPRS 850, Body SAR, Front side, Mid.ch, 2 Tx Slots

Area Scan (7x12x1): Measurement grid: dx=15mm, dy=15mm
Zoom Scan (5x5x7)/Cube 0: Measurement grid: dx=8mm, dy=8mm, dz=5mm
Reference Value = 28.6 V/m
Peak SAR (extrapolated) = 0.927 W/kg
SAR(1 g) = 0.719 mW/g; SAR(10 g) = 0.532 mW/g

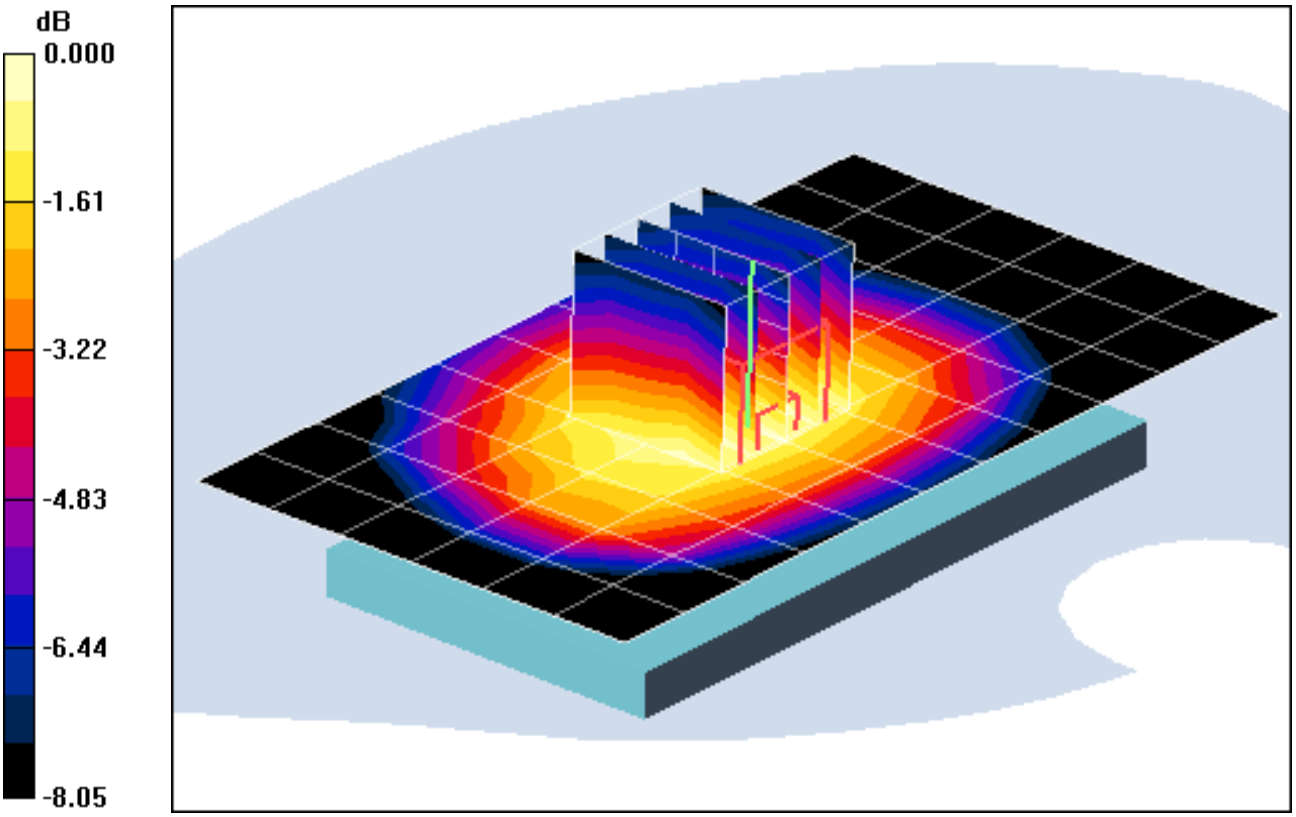

0 dB = 0.762mW/g

PCTEST ENGINEERING LABORATORY, INC.

DUT: A3LSGHI937; Type: 850/1900 GSM/GPRS/EDGE/WCDMA/HSPA Phone with Bluetooth and WLAN; Serial: FI-195-A

Communication System: GSM850 GPRS; 2 Tx slots; Frequency: 836.6 MHz;Duty Cycle: 1:4.15
Medium: 835 Body; Medium parameters used (interpolated):
f = 836.6 MHz; σ = 0.972 mho/m; ε_r = 54.9; ρ = 1000 kg/m^3
Phantom section: Flat Section; Space: 1.0 cm

Test Date: 08-09-2011; Ambient Temp: 24.3°C; Tissue Temp: 23.2°C

Probe: EX3DV4 - SN3550; ConvF(8.11, 8.11, 8.11); Calibrated: 2/14/2011
Sensor-Surface: 4mm (Mechanical Surface Detection)
Electronics: DAE4 Sn665; Calibrated: 4/20/2011
Phantom: SAM Sub; Type: SAM 4.0; Serial: TP-1357
Measurement SW: DASY4, V4.7 Build 80; Postprocessing SW: SEMCAD, V1.8 Build 186

Mode: GPRS 850, Body SAR, Bottom Edge, Mid.ch, 2 Tx Slots

Area Scan (5x7x1): Measurement grid: dx=15mm, dy=15mm
Zoom Scan (5x5x7)/Cube 0: Measurement grid: dx=8mm, dy=8mm, dz=5mm
Reference Value = 15.9 V/m
Peak SAR (extrapolated) = 0.360 W/kg
SAR(1 g) = 0.233 mW/g; SAR(10 g) = 0.147 mW/g

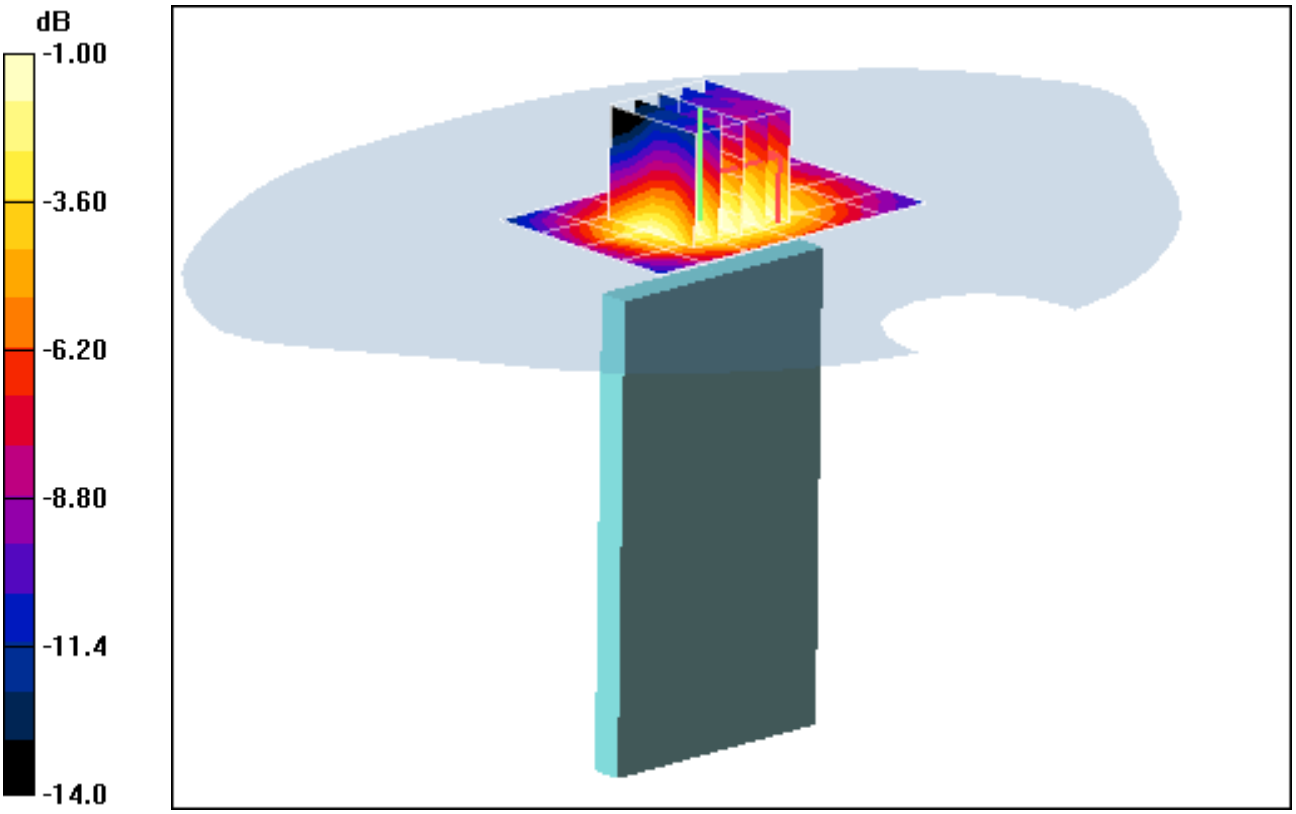

0 dB = 0.249mW/g

PCTEST ENGINEERING LABORATORY, INC.

DUT: A3LSGHI937; Type: 850/1900 GSM/GPRS/EDGE/WCDMA/HSPA Phone with Bluetooth and WLAN; Serial: FI-195-A

Communication System: GSM850 GPRS; 2 Tx slots; Frequency: 836.6 MHz;Duty Cycle: 1:4.15
Medium: 835 Body; Medium parameters used (interpolated):
f = 836.6 MHz; σ = 0.972 mho/m; ε_r = 54.9; ρ = 1000 kg/m^3
Phantom section: Flat Section; Space: 1.0 cm

Test Date: 08-09-2011; Ambient Temp: 24.3°C; Tissue Temp: 23.2°C

Probe: EX3DV4 - SN3550; ConvF(8.11, 8.11, 8.11); Calibrated: 2/14/2011
Sensor-Surface: 4mm (Mechanical Surface Detection)
Electronics: DAE4 Sn665; Calibrated: 4/20/2011
Phantom: SAM Sub; Type: SAM 4.0; Serial: TP-1357
Measurement SW: DASY4, V4.7 Build 80; Postprocessing SW: SEMCAD, V1.8 Build 186

Mode: GPRS 850, Body SAR, Right Edge, Mid.ch, 2 Tx Slots

Area Scan (5x13x1): Measurement grid: dx=15mm, dy=15mm
Zoom Scan (5x5x7)/Cube 0: Measurement grid: dx=8mm, dy=8mm, dz=5mm
Reference Value = 25.6 V/m
Peak SAR (extrapolated) = 0.883 W/kg
SAR(1 g) = 0.631 mW/g; SAR(10 g) = 0.433 mW/g

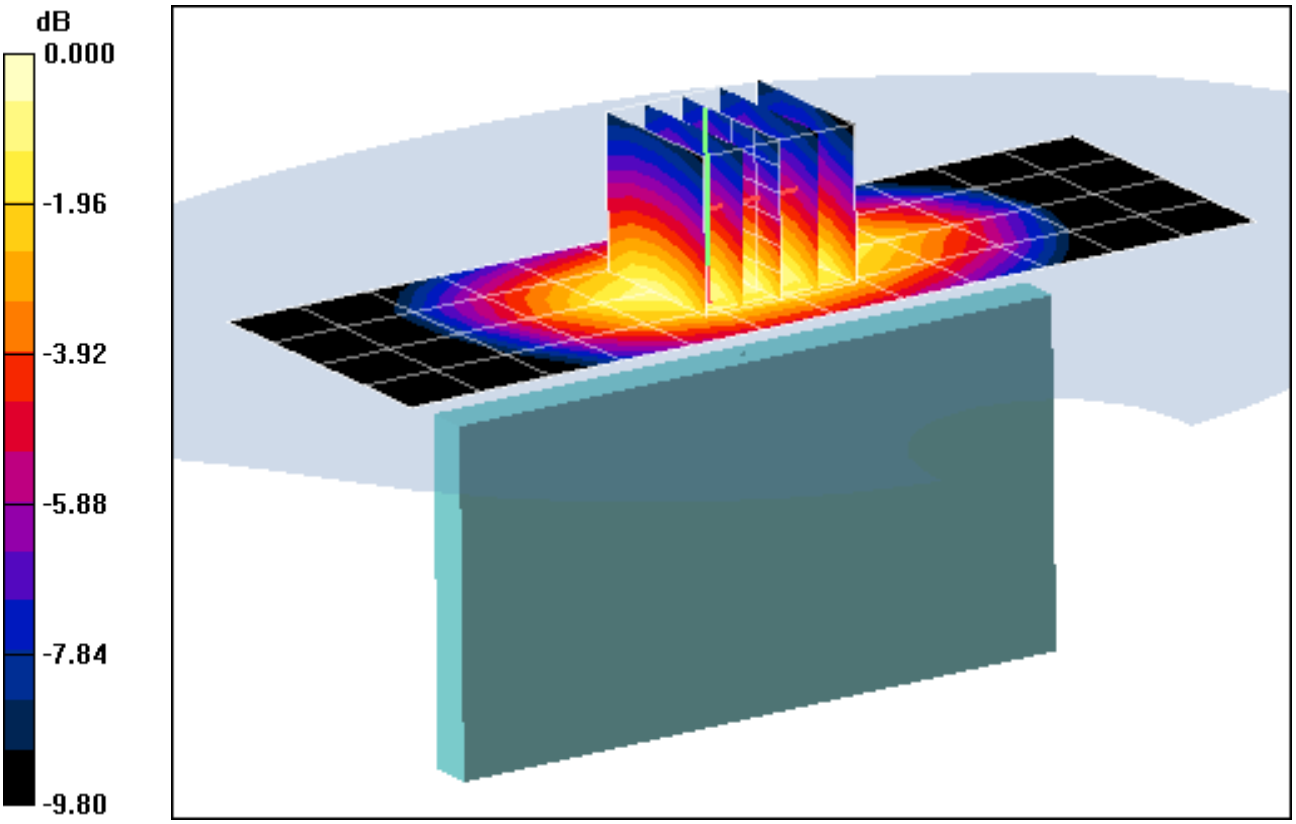

0 dB = 0.660mW/g

PCTEST ENGINEERING LABORATORY, INC.

DUT: A3LSGHI937; Type: 850/1900 GSM/GPRS/EDGE/WCDMA/HSPA Phone with Bluetooth and WLAN; Serial: FI-195-A

Communication System: GSM850 GPRS; 2 Tx slots; Frequency: 836.6 MHz;Duty Cycle: 1:4.15
Medium: 835 Body; Medium parameters used (interpolated):
f = 836.6 MHz; σ = 0.972 mho/m; ε_r = 54.9; ρ = 1000 kg/m^3
Phantom section: Flat Section; Space: 1.0 cm

Test Date: 08-09-2011; Ambient Temp: 24.3°C; Tissue Temp: 23.2°C

Probe: EX3DV4 - SN3550; ConvF(8.11, 8.11, 8.11); Calibrated: 2/14/2011
Sensor-Surface: 4mm (Mechanical Surface Detection)
Electronics: DAE4 Sn665; Calibrated: 4/20/2011
Phantom: SAM Sub; Type: SAM 4.0; Serial: TP-1357
Measurement SW: DASY4, V4.7 Build 80; Postprocessing SW: SEMCAD, V1.8 Build 186

Mode: GPRS 850, Body SAR, Left Edge, Mid.ch, 2 Tx Slots

Area Scan (5x13x1): Measurement grid: dx=15mm, dy=15mm
Zoom Scan (5x5x7)/Cube 0: Measurement grid: dx=8mm, dy=8mm, dz=5mm
Reference Value = 25.2 V/m
Peak SAR (extrapolated) = 0.798 W/kg
SAR(1 g) = 0.572 mW/g; SAR(10 g) = 0.400 mW/g

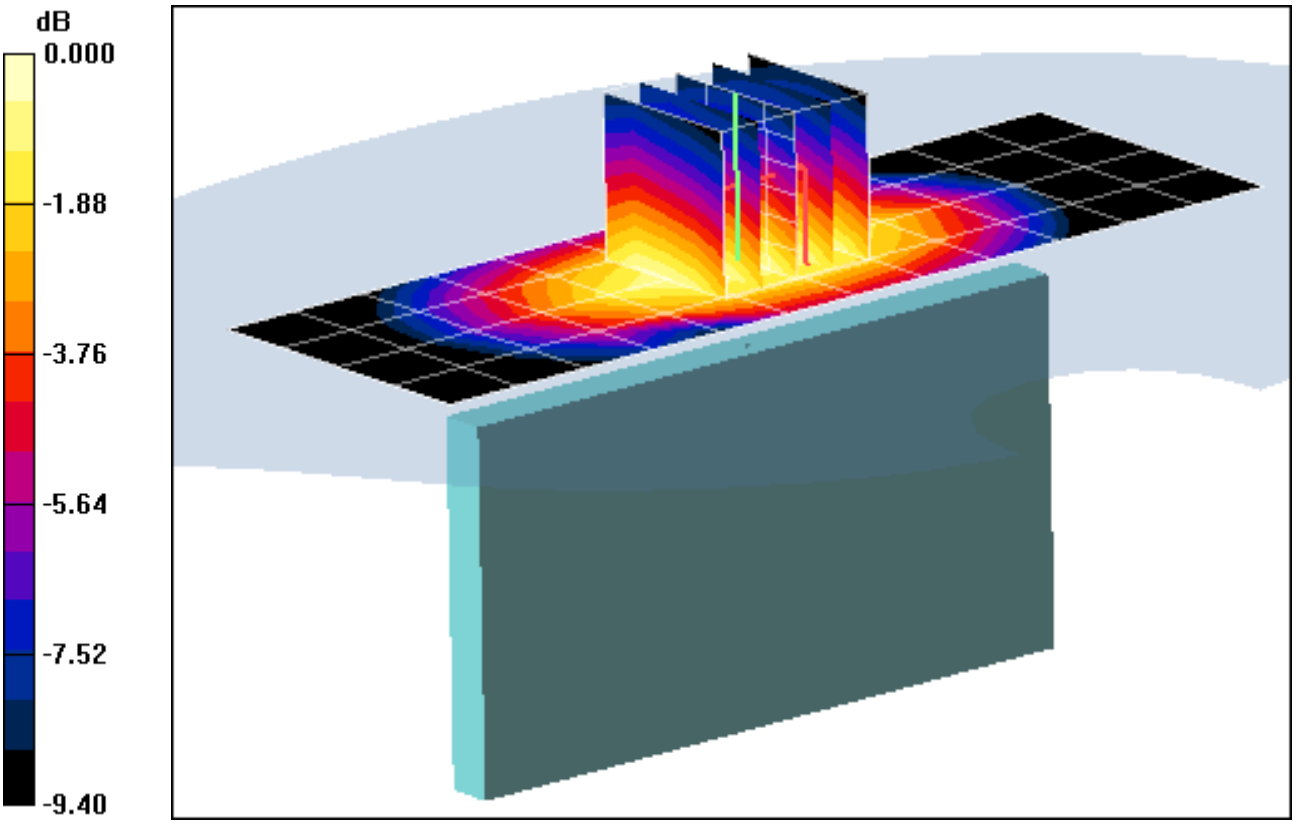

0 dB = 0.613mW/g

PCTEST ENGINEERING LABORATORY, INC.

DUT: A3LSGHI937; Type: 850/1900 GSM/GPRS/EDGE/WCDMA/HSPA Phone with Bluetooth and WLAN; Serial: FI-195-A

Communication System: GSM1900; Frequency: 1880 MHz; Duty Cycle: 1:8.3
Medium: 1900 Body; Medium parameters used:
f = 1880 MHz; σ = 1.49 mho/m; ε_r = 51.8; ρ = 1000 kg/m^3
Phantom section: Flat Section; Space: 1.0 cm

Test Date: 08-11-2011; Ambient Temp: 23.1°C; Tissue Temp: 22.2°C

Probe: ES3DV3 - SN3209; ConvF(4.48, 4.48, 4.48); Calibrated: 4/18/2011
Sensor-Surface: 4mm (Mechanical Surface Detection)
Electronics: DAE4 Sn704; Calibrated: 3/17/2011
Phantom: SAM with CRP; Type: SAM; Serial: TP1375
Measurement SW: DASY4, V4.7 Build 80; Postprocessing SW: SEMCAD, V1.8 Build 186

Mode: GSM 1900, Body SAR, Back side, Mid.ch

Area Scan (7x12x1): Measurement grid: dx=15mm, dy=15mm
Zoom Scan (5x5x7)/Cube 0: Measurement grid: dx=8mm, dy=8mm, dz=5mm
Reference Value = 13.6 V/m
Peak SAR (extrapolated) = 0.474 W/kg
SAR(1 g) = 0.271 mW/g; SAR(10 g) = 0.144 mW/g

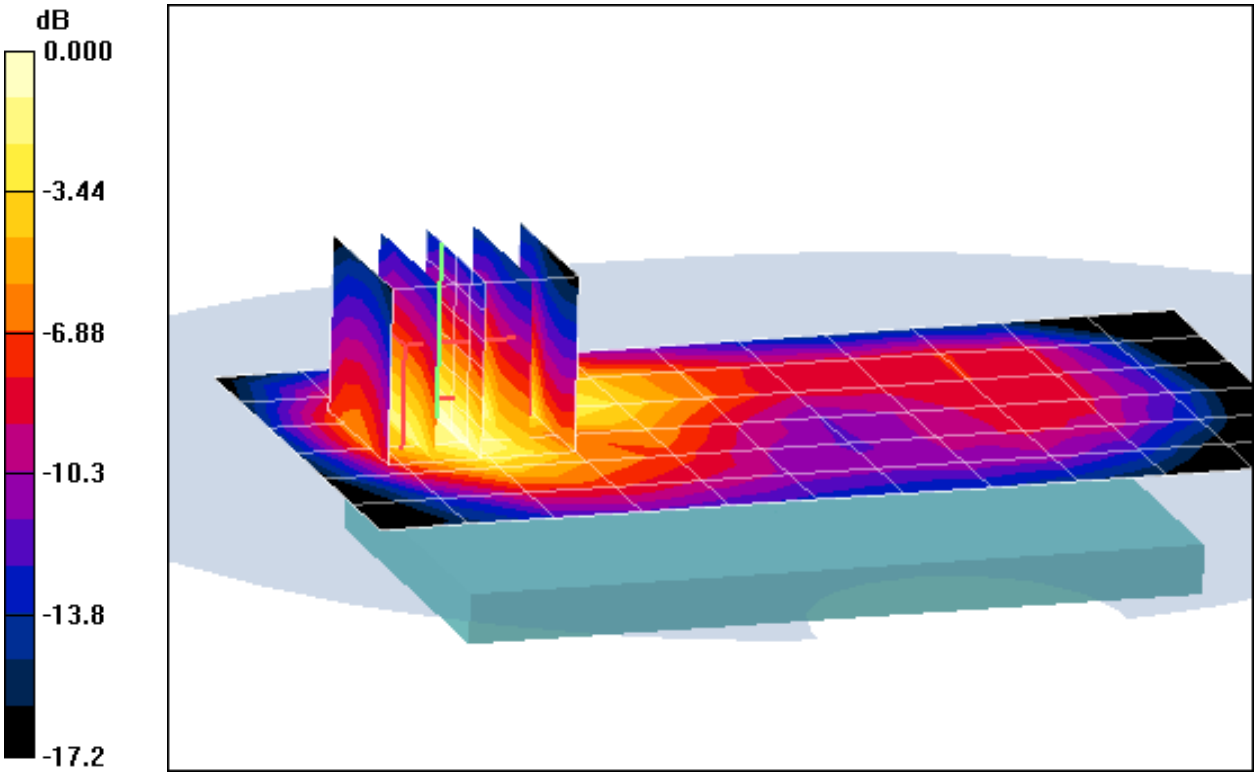

0 dB = 0.306mW/g

PCTEST ENGINEERING LABORATORY, INC.

DUT: A3LSGHI937; Type: 850/1900 GSM/GPRS/EDGE/WCDMA/HSPA Phone with Bluetooth and WLAN; Serial: FI-195-A

Communication System: GSM1900 GPRS; 2 Tx slots; Frequency: 1880 MHz;Duty Cycle: 1:4.15
Medium: 1900 Body; Medium parameters used:
f = 1880 MHz; σ = 1.476 mho/m; ε_r = 51.4; ρ = 1000 kg/m^3
Phantom section: Flat Section; Space: 1.0 cm

Test Date: 08-04-2011; Ambient Temp: 24.7°C; Tissue Temp: 23.1°C

Probe: ES3DV2 - SN3022; ConvF(4.34, 4.34, 4.34); Calibrated: 9/21/2010
Sensor-Surface: 4mm (Mechanical Surface Detection)
Electronics: DAE4 Sn704; Calibrated: 3/17/2011
Phantom: SAM with CRP; Type: SAM; Serial: TP1375
Measurement SW: DASY4, V4.7 Build 80; Postprocessing SW: SEMCAD, V1.8 Build 186

Mode: GPRS 1900, Body SAR, Back side, Mid.ch, 2 Tx Slots

Area Scan (7x12x1): Measurement grid: dx=15mm, dy=15mm
Zoom Scan (5x5x7)/Cube 0: Measurement grid: dx=8mm, dy=8mm, dz=5mm
Reference Value = 23.1 V/m
Peak SAR (extrapolated) = 1.00 W/kg
SAR(1 g) = 0.618 mW/g; SAR(10 g) = 0.327 mW/g

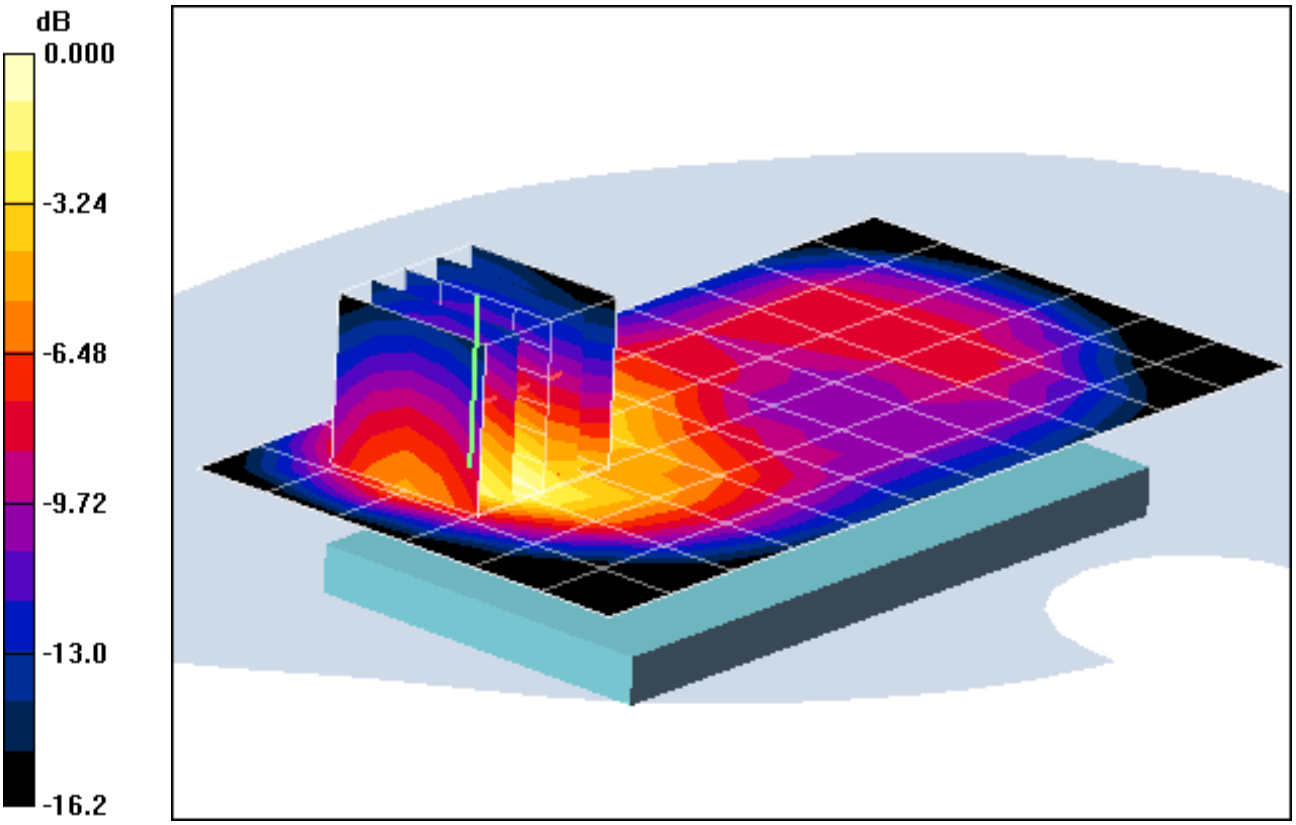

0 dB = 0.670mW/g

PCTEST ENGINEERING LABORATORY, INC.

DUT: A3LSGHI937; Type: 850/1900 GSM/GPRS/EDGE/WCDMA/HSPA Phone with Bluetooth and WLAN; Serial: FI-195-A

Communication System: GSM1900 GPRS; 2 Tx slots; Frequency: 1880 MHz;Duty Cycle: 1:4.15
Medium: 1900 Body; Medium parameters used:
f = 1880 MHz; σ = 1.476 mho/m; ε_r = 51.4; ρ = 1000 kg/m^3
Phantom section: Flat Section; Space: 1.0 cm

Test Date: 08-04-2011; Ambient Temp: 24.7°C; Tissue Temp: 23.1°C

Probe: ES3DV2 - SN3022; ConvF(4.34, 4.34, 4.34); Calibrated: 9/21/2010
Sensor-Surface: 4mm (Mechanical Surface Detection)
Electronics: DAE4 Sn704; Calibrated: 3/17/2011
Phantom: SAM with CRP; Type: SAM; Serial: TP1375
Measurement SW: DASY4, V4.7 Build 80; Postprocessing SW: SEMCAD, V1.8 Build 186

Mode: GPRS 1900, Body SAR, Front side, Mid.ch, 2 Tx Slots

Area Scan (7x12x1): Measurement grid: dx=15mm, dy=15mm
Zoom Scan (5x5x7)/Cube 0: Measurement grid: dx=8mm, dy=8mm, dz=5mm
Reference Value = 14.8 V/m
Peak SAR (extrapolated) = 0.514 W/kg
SAR(1 g) = 0.308 mW/g; SAR(10 g) = 0.170 mW/g

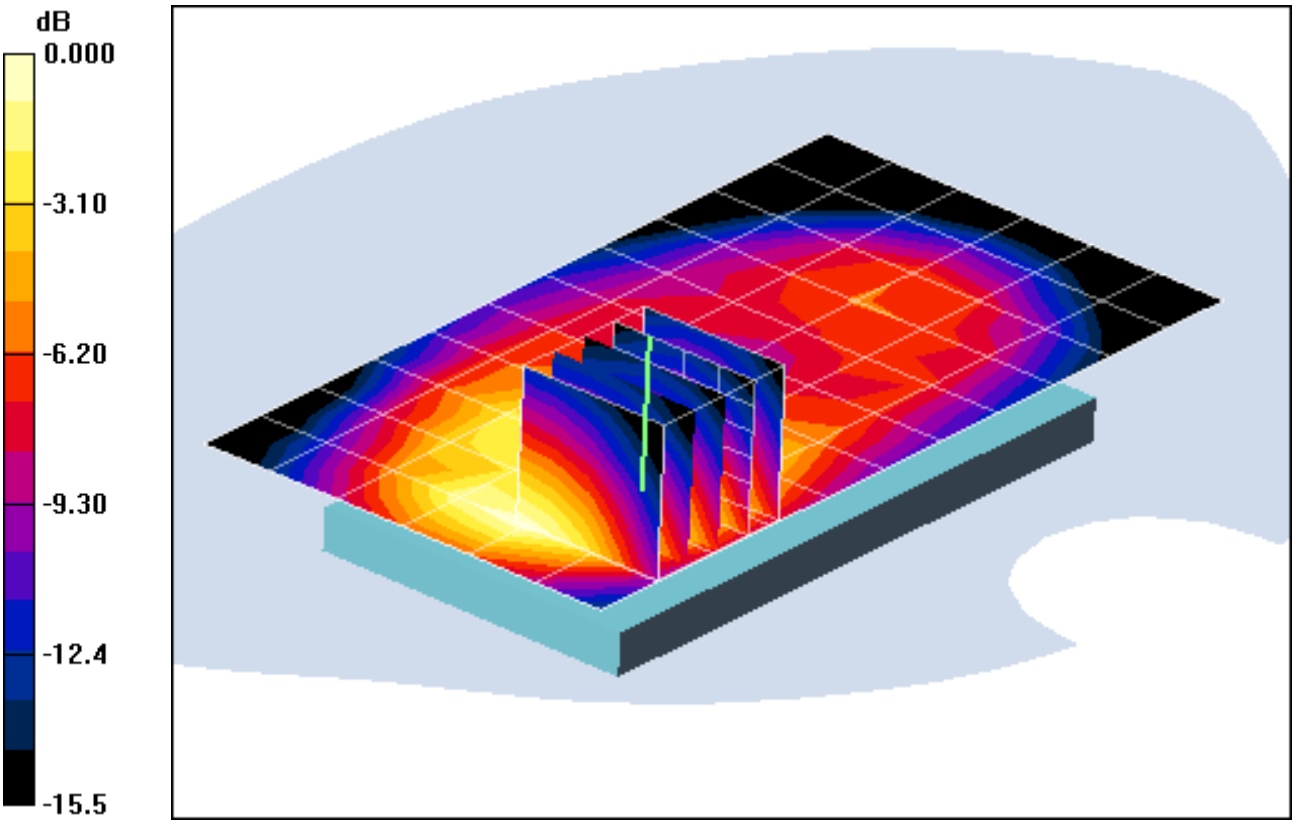

0 dB = 0.322mW/g

PCTEST ENGINEERING LABORATORY, INC.

DUT: A3LSGHI937; Type: 850/1900 GSM/GPRS/EDGE/WCDMA/HSPA Phone with Bluetooth and WLAN; Serial: FI-195-A

Communication System: GSM1900 GPRS; 2 Tx slots; Frequency: 1880 MHz;Duty Cycle: 1:4.15
Medium: 1900 Body; Medium parameters used:
f = 1880 MHz; σ = 1.476 mho/m; ε_r = 51.4; ρ = 1000 kg/m^3
Phantom section: Flat Section; Space: 1.0 cm

Test Date: 08-04-2011; Ambient Temp: 24.7°C; Tissue Temp: 23.1°C

Probe: ES3DV2 - SN3022; ConvF(4.34, 4.34, 4.34); Calibrated: 9/21/2010
Sensor-Surface: 4mm (Mechanical Surface Detection)
Electronics: DAE4 Sn704; Calibrated: 3/17/2011
Phantom: SAM with CRP; Type: SAM; Serial: TP1375
Measurement SW: DASY4, V4.7 Build 80; Postprocessing SW: SEMCAD, V1.8 Build 186

Mode: GPRS 1900, Body SAR, Bottom Edge, Mid.ch, 2 Tx Slots

Area Scan (5x7x1): Measurement grid: dx=15mm, dy=15mm
Zoom Scan (5x5x7)/Cube 0: Measurement grid: dx=8mm, dy=8mm, dz=5mm
Reference Value = 17.2 V/m
Peak SAR (extrapolated) = 0.622 W/kg
SAR(1 g) = 0.395 mW/g; SAR(10 g) = 0.220 mW/g

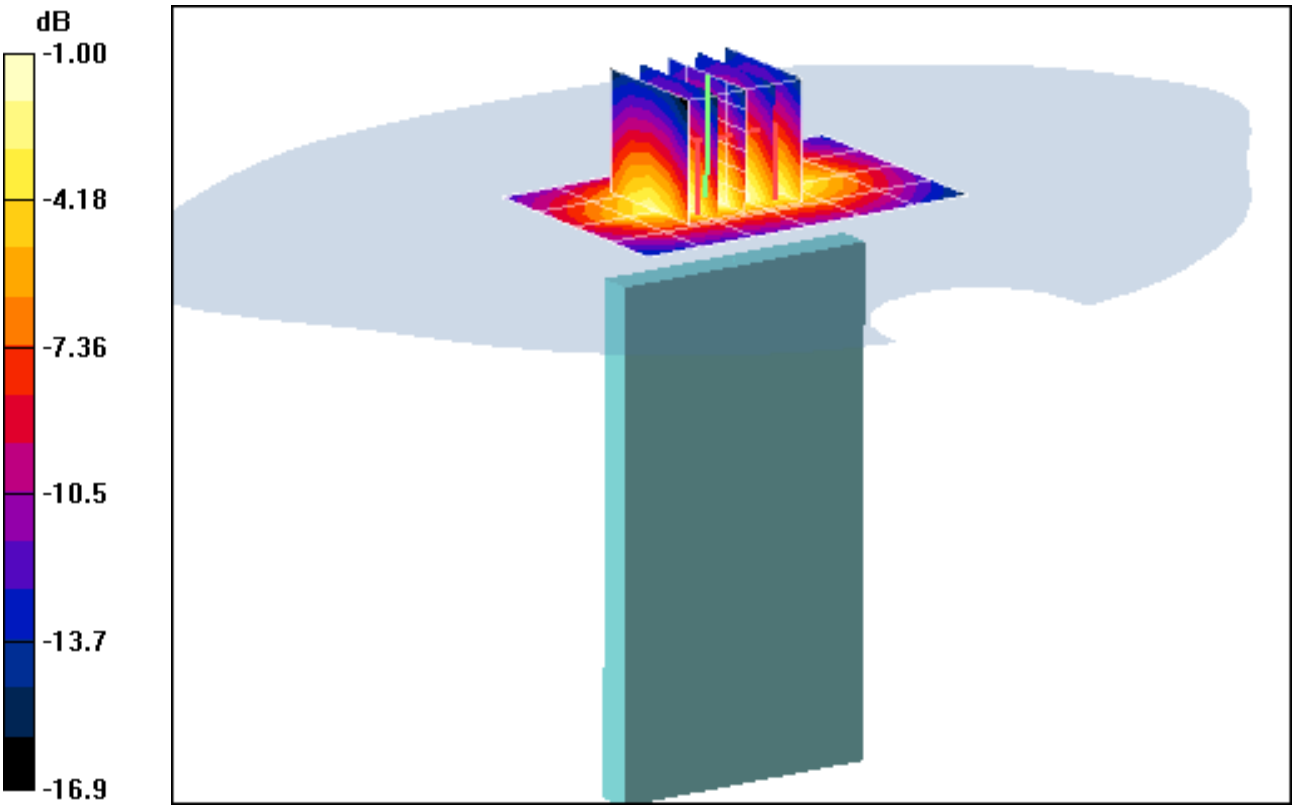

0 dB = 0.451mW/g

PCTEST ENGINEERING LABORATORY, INC.

DUT: A3LSGHI937; Type: 850/1900 GSM/GPRS/EDGE/WCDMA/HSPA Phone with Bluetooth and WLAN; Serial: FI-195-A

Communication System: GSM1900 GPRS; 2 Tx slots; Frequency: 1880 MHz;Duty Cycle: 1:4.15
Medium: 1900 Body; Medium parameters used:
f = 1880 MHz; σ = 1.476 mho/m; ε_r = 51.4; ρ = 1000 kg/m^3
Phantom section: Flat Section; Space: 1.0 cm

Test Date: 08-04-2011; Ambient Temp: 24.7°C; Tissue Temp: 23.1°C

Probe: ES3DV2 - SN3022; ConvF(4.34, 4.34, 4.34); Calibrated: 9/21/2010
Sensor-Surface: 4mm (Mechanical Surface Detection)
Electronics: DAE4 Sn704; Calibrated: 3/17/2011
Phantom: SAM with CRP; Type: SAM; Serial: TP1375
Measurement SW: DASY4, V4.7 Build 80; Postprocessing SW: SEMCAD, V1.8 Build 186

Mode: GPRS 1900, Body SAR, Right Edge, Mid.ch, 2 Tx Slots

Area Scan (5x11x1): Measurement grid: dx=15mm, dy=15mm
Zoom Scan (5x5x7)/Cube 0: Measurement grid: dx=8mm, dy=8mm, dz=5mm
Reference Value = 9.82 V/m
Peak SAR (extrapolated) = 0.207 W/kg
SAR(1 g) = 0.132 mW/g; SAR(10 g) = 0.076 mW/g

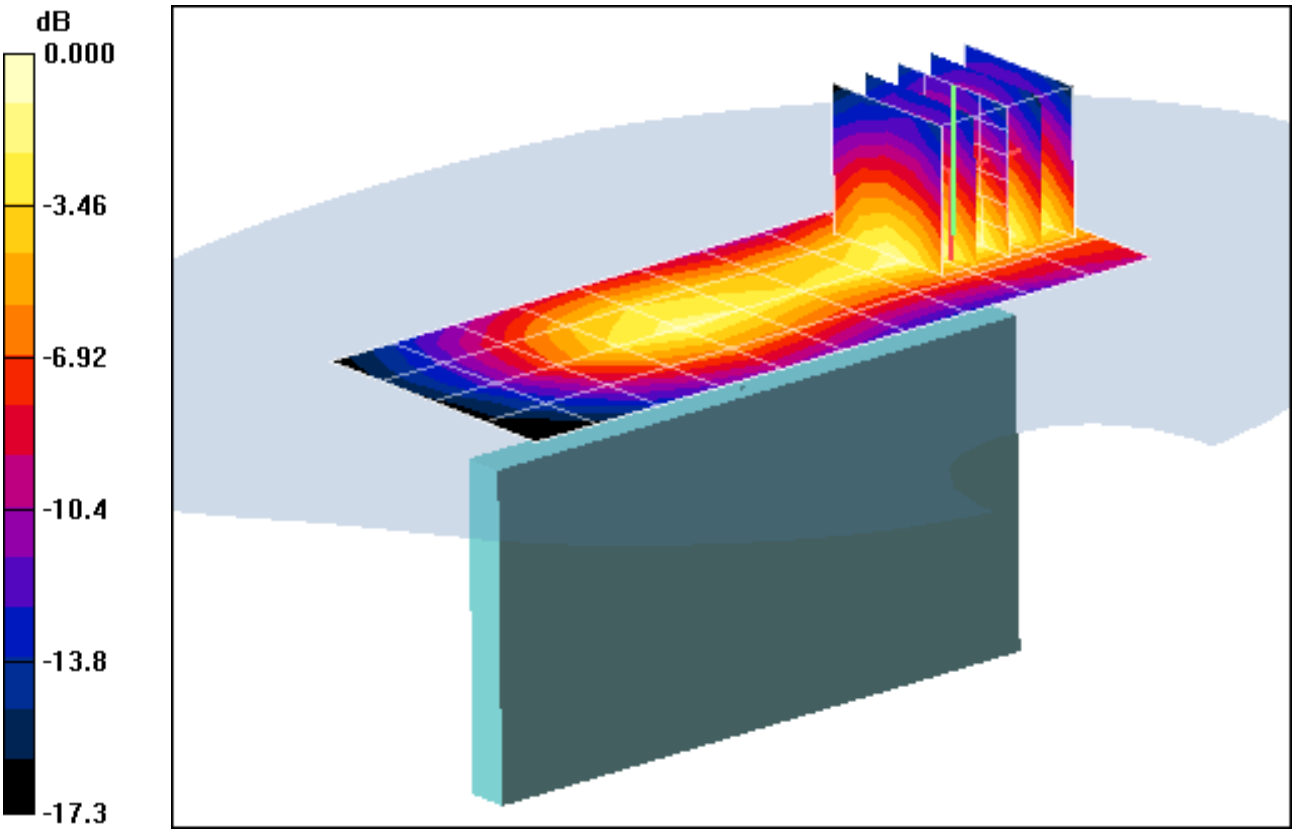

0 dB = 0.148mW/g

PCTEST ENGINEERING LABORATORY, INC.

DUT: A3LSGHI937; Type: 850/1900 GSM/GPRS/EDGE/WCDMA/HSPA Phone with Bluetooth and WLAN; Serial: FI-195-A

Communication System: GSM1900 GPRS; 2 Tx slots; Frequency: 1880 MHz;Duty Cycle: 1:4.15
Medium: 1900 Body; Medium parameters used:
f = 1880 MHz; σ = 1.476 mho/m; ε_r = 51.4; ρ = 1000 kg/m^3
Phantom section: Flat Section; Space: 1.0 cm

Test Date: 08-04-2011; Ambient Temp: 24.7°C; Tissue Temp: 23.1°C

Probe: ES3DV2 - SN3022; ConvF(4.34, 4.34, 4.34); Calibrated: 9/21/2010
Sensor-Surface: 4mm (Mechanical Surface Detection)
Electronics: DAE4 Sn704; Calibrated: 3/17/2011
Phantom: SAM with CRP; Type: SAM; Serial: TP1375
Measurement SW: DASY4, V4.7 Build 80; Postprocessing SW: SEMCAD, V1.8 Build 186

Mode: GPRS 1900, Body SAR, Left Edge, Mid.ch, 2 Tx Slots

Area Scan (5x13x1): Measurement grid: dx=15mm, dy=15mm
Zoom Scan (5x5x7)/Cube 0: Measurement grid: dx=8mm, dy=8mm, dz=5mm
Reference Value = 5.53 V/m
Peak SAR (extrapolated) = 0.057 W/kg
SAR(1 g) = 0.039 mW/g; SAR(10 g) = 0.024 mW/g

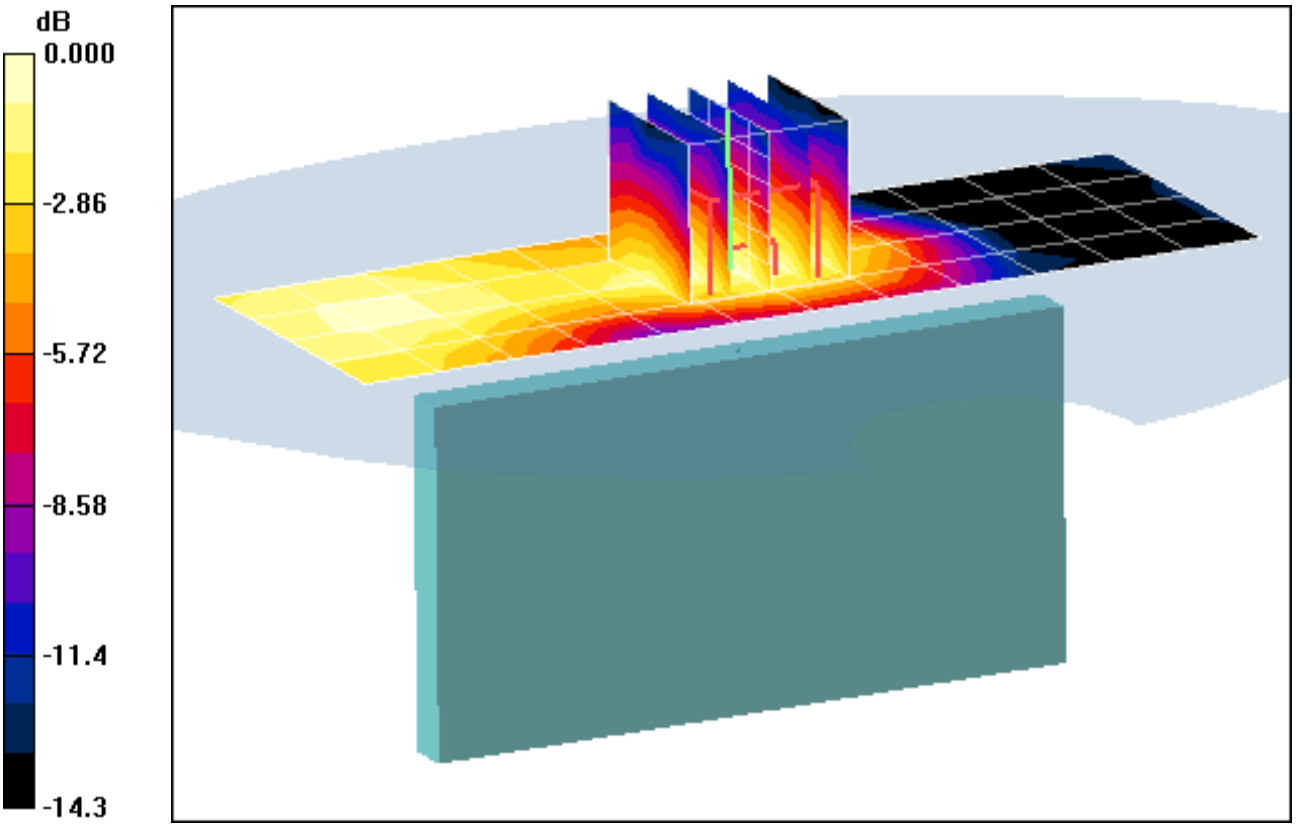

0 dB = 0.043mW/g

PCTEST ENGINEERING LABORATORY, INC.

DUT: A3LSGHI937; Type: 850/1900 GSM/GPRS/EDGE/WCDMA/HSPA Phone with Bluetooth and WLAN; Serial: FI-195-A

Communication System: WCDMA850; Frequency: 836.6 MHz;Duty Cycle: 1:1
Medium: 835 Body; Medium parameters used (interpolated):
f = 836.6 MHz; σ = 0.972 mho/m; ε_r = 54.9; ρ = 1000 kg/m^3
Phantom section: Flat Section; Space: 1.0 cm

Test Date: 08-09-2011; Ambient Temp: 24.3°C; Tissue Temp: 23.2°C

Probe: EX3DV4 - SN3550; ConvF(8.11, 8.11, 8.11); Calibrated: 2/14/2011
Sensor-Surface: 4mm (Mechanical Surface Detection)
Electronics: DAE4 Sn665; Calibrated: 4/20/2011
Phantom: SAM Sub; Type: SAM 4.0; Serial: TP-1357
Measurement SW: DASY4, V4.7 Build 80; Postprocessing SW: SEMCAD, V1.8 Build 186

Mode: WCDMA 850, Body SAR, Back side, Mid.ch

Area Scan (7x12x1): Measurement grid: dx=15mm, dy=15mm
Zoom Scan (5x5x7)/Cube 0: Measurement grid: dx=8mm, dy=8mm, dz=5mm
Reference Value = 24.1 V/m
Peak SAR (extrapolated) = 0.699 W/kg
SAR(1 g) = 0.553 mW/g; SAR(10 g) = 0.416 mW/g

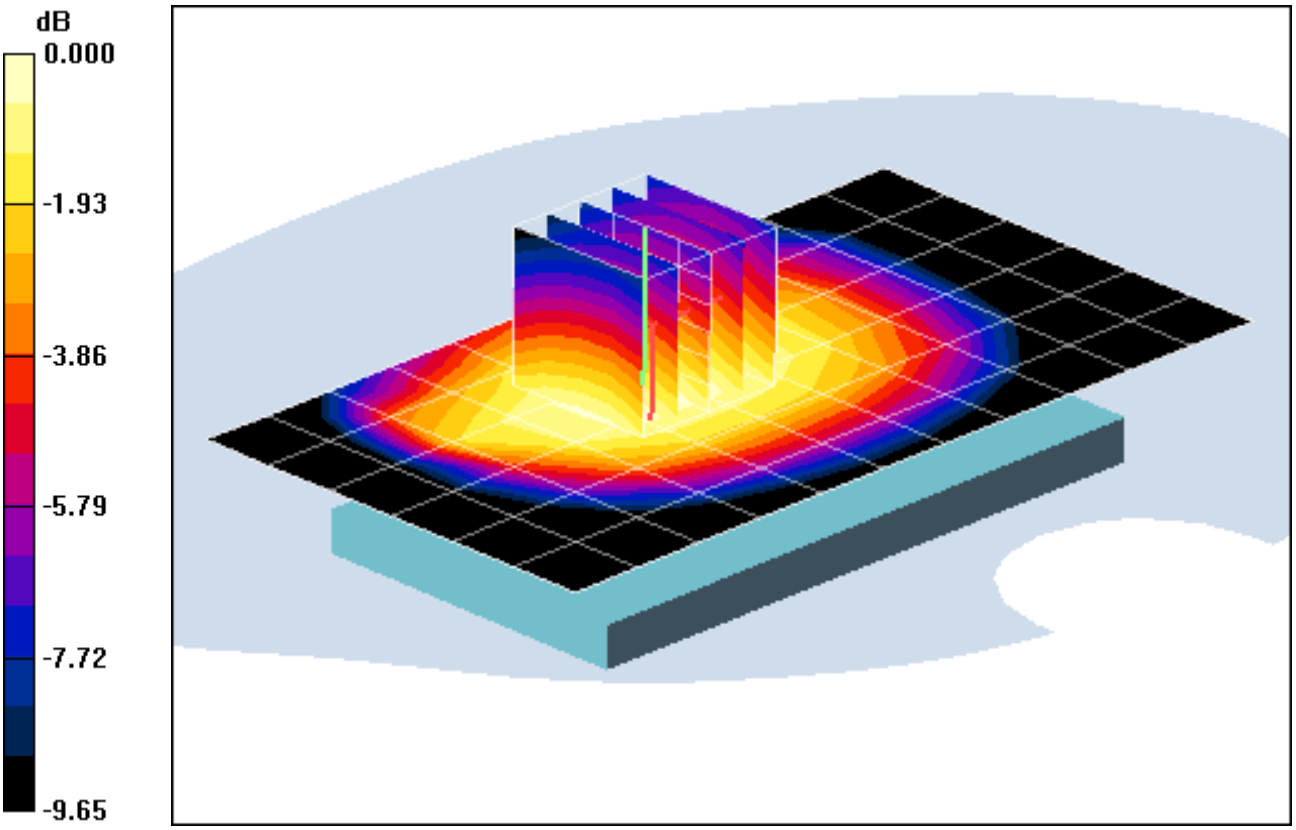

0 dB = 0.585mW/g

PCTEST ENGINEERING LABORATORY, INC.

DUT: A3LSGHI937; Type: 850/1900 GSM/GPRS/EDGE/WCDMA/HSPA Phone with Bluetooth and WLAN; Serial: FI-195-A

Communication System: WCDMA850; Frequency: 836.6 MHz;Duty Cycle: 1:1
Medium: 835 Body; Medium parameters used (interpolated):
f = 836.6 MHz; σ = 0.972 mho/m; ε_r = 54.9; ρ = 1000 kg/m^3
Phantom section: Flat Section; Space: 1.0 cm

Test Date: 08-09-2011; Ambient Temp: 24.3°C; Tissue Temp: 23.2°C

Probe: EX3DV4 - SN3550; ConvF(8.11, 8.11, 8.11); Calibrated: 2/14/2011
Sensor-Surface: 4mm (Mechanical Surface Detection)
Electronics: DAE4 Sn665; Calibrated: 4/20/2011
Phantom: SAM Sub; Type: SAM 4.0; Serial: TP-1357
Measurement SW: DASY4, V4.7 Build 80; Postprocessing SW: SEMCAD, V1.8 Build 186

Mode: WCDMA 850, Body SAR, Front side, Mid.ch

Area Scan (7x12x1): Measurement grid: dx=15mm, dy=15mm
Zoom Scan (5x5x7)/Cube 0: Measurement grid: dx=8mm, dy=8mm, dz=5mm
Reference Value = 19.5 V/m
Peak SAR (extrapolated) = 0.442 W/kg
SAR(1 g) = 0.355 mW/g; SAR(10 g) = 0.273 mW/g

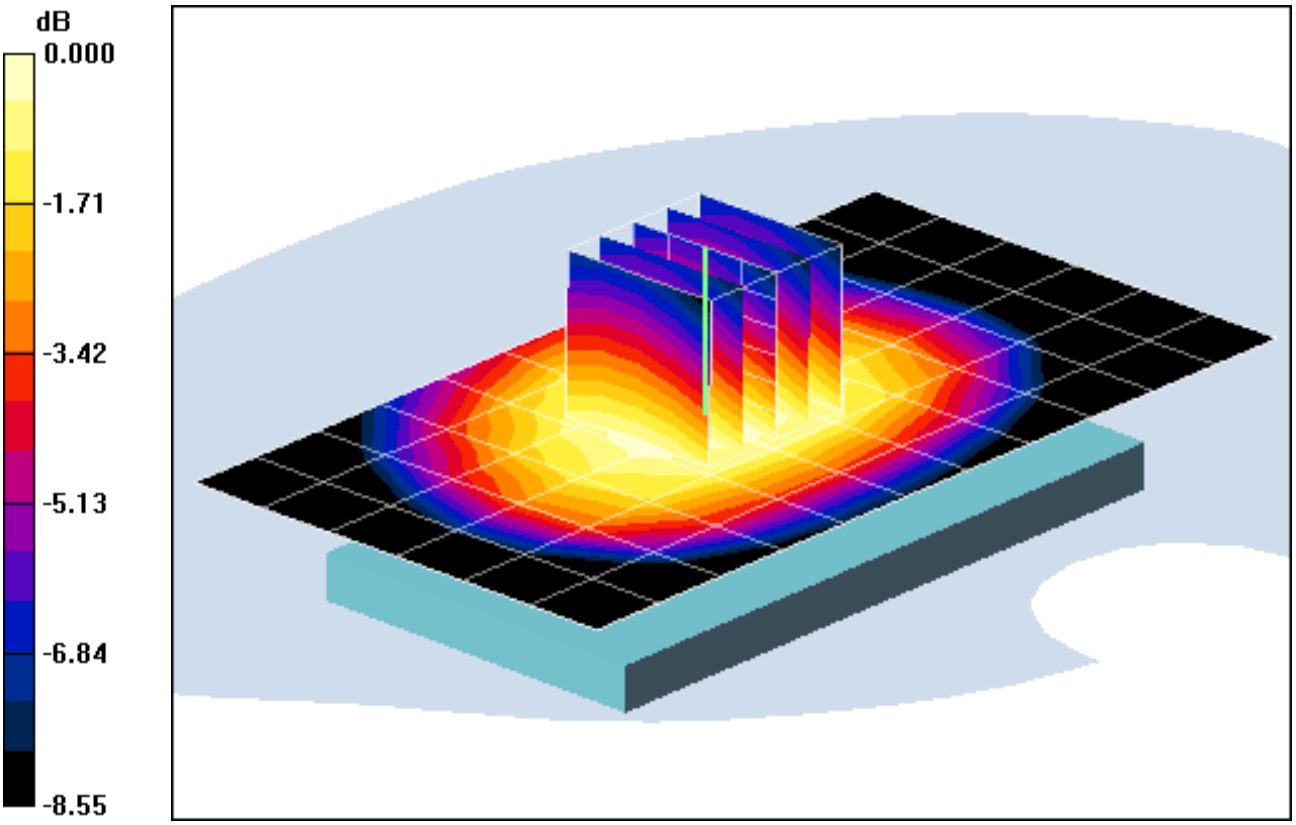

0 dB = 0.371mW/g

PCTEST ENGINEERING LABORATORY, INC.

DUT: A3LSGHI937; Type: 850/1900 GSM/GPRS/EDGE/WCDMA/HSPA Phone with Bluetooth and WLAN; Serial: FI-195-A

Communication System: WCDMA850; Frequency: 836.6 MHz;Duty Cycle: 1:1
Medium: 835 Body; Medium parameters used (interpolated):
f = 836.6 MHz; σ = 0.972 mho/m; ε_r = 54.9; ρ = 1000 kg/m^3
Phantom section: Flat Section; Space: 1.0 cm

Test Date: 08-09-2011; Ambient Temp: 24.3°C; Tissue Temp: 23.2°C

Probe: EX3DV4 - SN3550; ConvF(8.11, 8.11, 8.11); Calibrated: 2/14/2011
Sensor-Surface: 4mm (Mechanical Surface Detection)
Electronics: DAE4 Sn665; Calibrated: 4/20/2011
Phantom: SAM Sub; Type: SAM 4.0; Serial: TP-1357
Measurement SW: DASY4, V4.7 Build 80; Postprocessing SW: SEMCAD, V1.8 Build 186

Mode: WCDMA 850, Body SAR, Bottom Edge, Mid.ch

Area Scan (5x7x1): Measurement grid: dx=15mm, dy=15mm
Zoom Scan (5x5x7)/Cube 0: Measurement grid: dx=8mm, dy=8mm, dz=5mm
Reference Value = 11.1 V/m
Peak SAR (extrapolated) = 0.172 W/kg
SAR(1 g) = 0.110 mW/g; SAR(10 g) = 0.068 mW/g

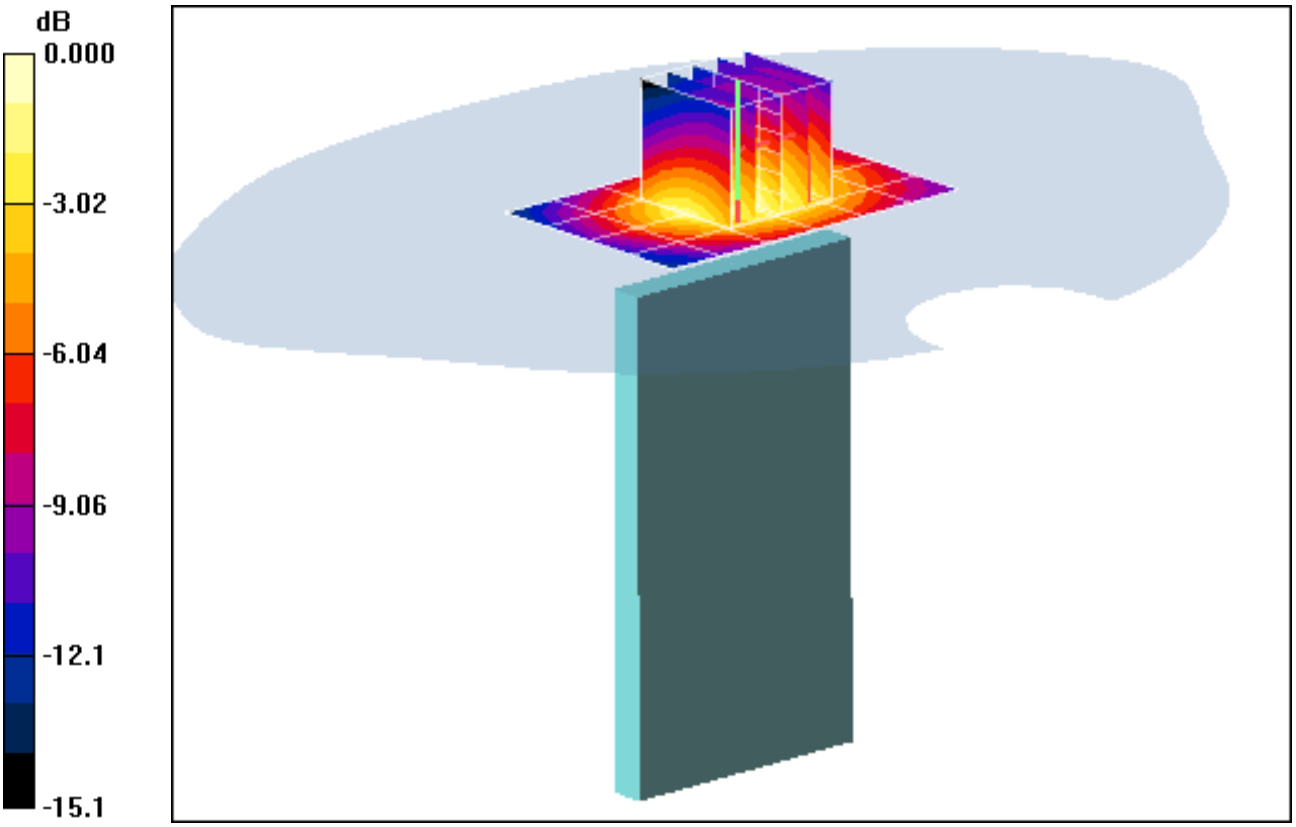

0 dB = 0.122mW/g

PCTEST ENGINEERING LABORATORY, INC.

DUT: A3LSGHI937; Type: 850/1900 GSM/GPRS/EDGE/WCDMA Phone with Bluetooth and WLAN; Serial: FI-195-A

Communication System: WCDMA850; Frequency: 836.6 MHz;Duty Cycle: 1:1
Medium: 835 Body Medium parameters used (interpolated):
f = 836.6 MHz; σ = 0.972 mho/m; ε_r = 54.9; ρ = 1000 kg/m^3
Phantom section: Flat Section; Space 1.0 cm

Test Date: 08-09-2011; Ambient Temp: 24.3°C; Tissue Temp: 23.2°C

Probe: EX3DV4 - SN3550; ConvF(8.11, 8.11, 8.11); Calibrated: 2/14/2011
Sensor-Surface: 4mm (Mechanical Surface Detection)
Electronics: DAE4 Sn665; Calibrated: 4/20/2011
Phantom: SAM Sub; Type: SAM 4.0; Serial: TP-1357
Measurement SW: DASY4, V4.7 Build 80; Postprocessing SW: SEMCAD, V1.8 Build 186

Mode: WCDMA 850, Body SAR, Right Edge, Mid.ch

Area Scan (5x13x1): Measurement grid: dx=15mm, dy=15mm
Zoom Scan (5x5x7)/Cube 0: Measurement grid: dx=8mm, dy=8mm, dz=5mm
Reference Value = 19.1 V/m
Peak SAR (extrapolated) = 0.462 W/kg
SAR(1 g) = 0.331 mW/g; SAR(10 g) = 0.229 mW/g

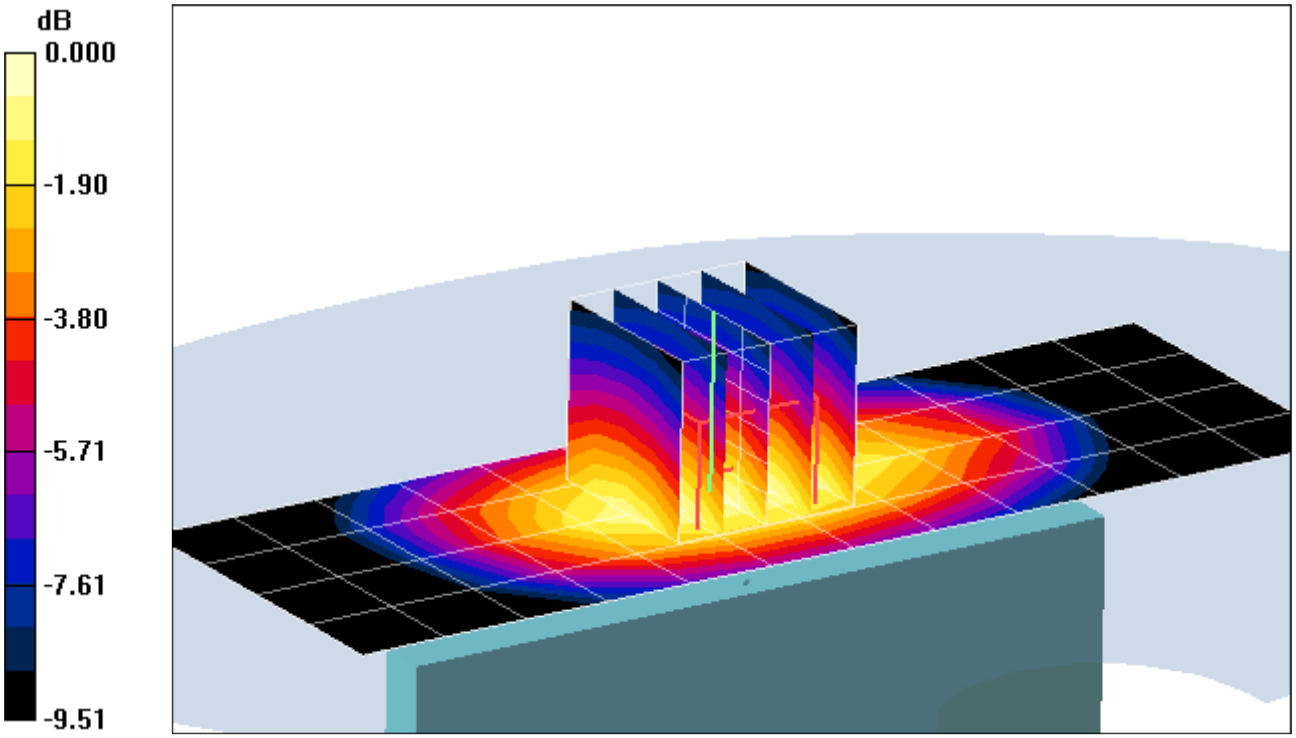

0 dB = 0.358mW/g

PCTEST ENGINEERING LABORATORY, INC.

DUT: A3LSGHI937; Type: 850/1900 GSM/GPRS/EDGE/WCDMA/HSPA Phone with Bluetooth and WLAN; Serial: FI-195-A

Communication System: WCDMA850; Frequency: 836.6 MHz;Duty Cycle: 1:1
Medium: 835 Body; Medium parameters used (interpolated):
f = 836.6 MHz; σ = 0.972 mho/m; ε_r = 54.9; ρ = 1000 kg/m^3
Phantom section: Flat Section; Space: 1.0 cm

Test Date: 08-09-2011; Ambient Temp: 24.3°C; Tissue Temp: 23.2°C

Probe: EX3DV4 - SN3550; ConvF(8.11, 8.11, 8.11); Calibrated: 2/14/2011
Sensor-Surface: 4mm (Mechanical Surface Detection)
Electronics: DAE4 Sn665; Calibrated: 4/20/2011
Phantom: SAM Sub; Type: SAM 4.0; Serial: TP-1357
Measurement SW: DASY4, V4.7 Build 80; Postprocessing SW: SEMCAD, V1.8 Build 186

Mode: WCDMA 850, Body SAR, Left Edge, Mid.ch

Area Scan (5x13x1): Measurement grid: dx=15mm, dy=15mm
Zoom Scan (5x5x7)/Cube 0: Measurement grid: dx=8mm, dy=8mm, dz=5mm
Reference Value = 18.4 V/m
Peak SAR (extrapolated) = 0.436 W/kg
SAR(1 g) = 0.309 mW/g; SAR(10 g) = 0.214 mW/g

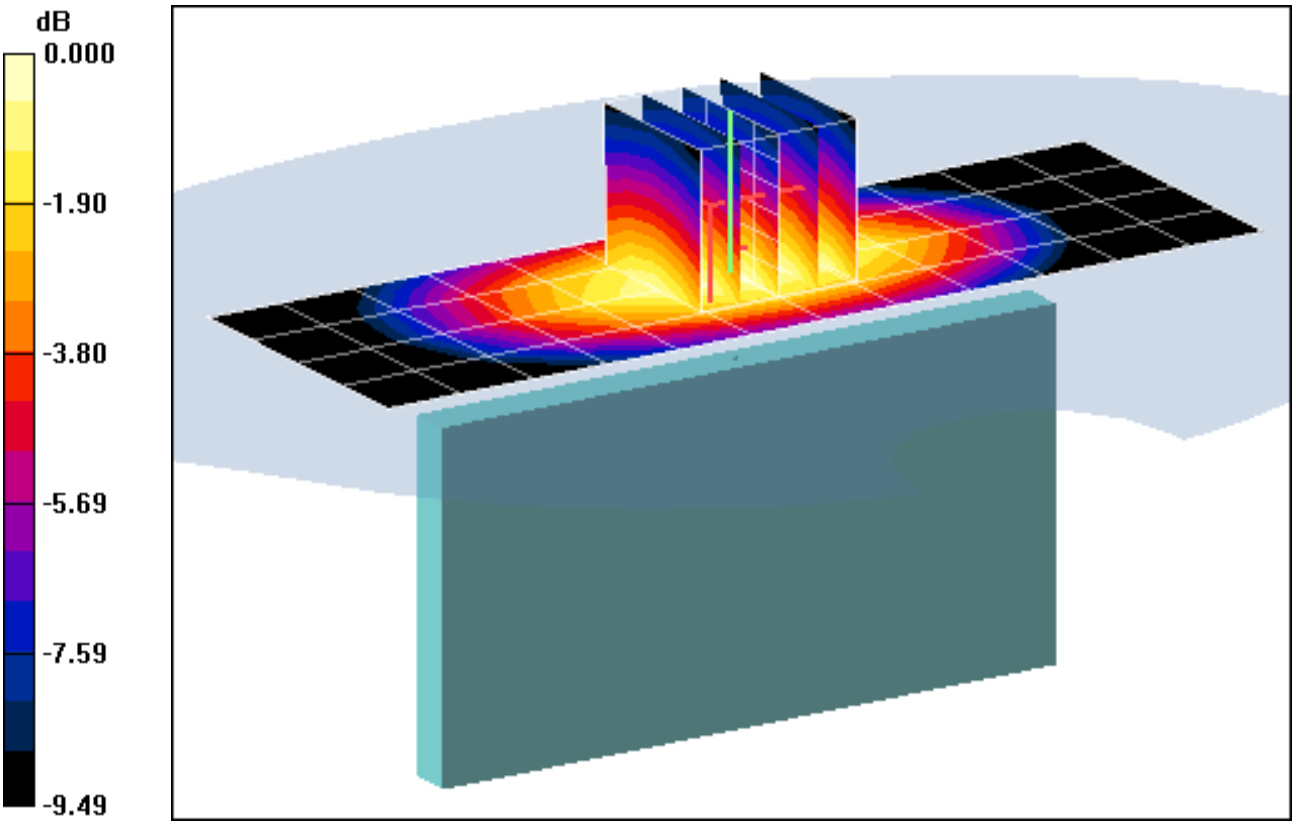

0 dB = 0.332mW/g

PCTEST ENGINEERING LABORATORY, INC.

DUT: A3LSGHI937; Type: 850/1900 GSM/GPRS/EDGE/WCDMA/HSPA Phone with Bluetooth and WLAN; Serial: FI-195-A

Communication System: WCDMA1900; Frequency: 1880 MHz;Duty Cycle: 1:1
Medium: 1900 Body; Medium parameters used:
f = 1880 MHz; σ = 1.476 mho/m; ε_r = 51.4; ρ = 1000 kg/m^3
Phantom section: Flat Section; Space: 1.0 cm

Test Date: 08-04-2011; Ambient Temp: 24.7°C; Tissue Temp: 23.1°C

Probe: ES3DV2 - SN3022; ConvF(4.34, 4.34, 4.34); Calibrated: 9/21/2010
Sensor-Surface: 4mm (Mechanical Surface Detection)
Electronics: DAE4 Sn704; Calibrated: 3/17/2011
Phantom: SAM with CRP; Type: SAM; Serial: TP1375
Measurement SW: DASY4, V4.7 Build 80; Postprocessing SW: SEMCAD, V1.8 Build 186

Mode: WCDMA 1900, Body SAR, Back side, Mid.ch

Area Scan (7x12x1): Measurement grid: dx=15mm, dy=15mm
Zoom Scan (5x5x7)/Cube 0: Measurement grid: dx=8mm, dy=8mm, dz=5mm
Reference Value = 24.5 V/m
Peak SAR (extrapolated) = 1.15 W/kg
SAR(1 g) = 0.705 mW/g; SAR(10 g) = 0.375 mW/g

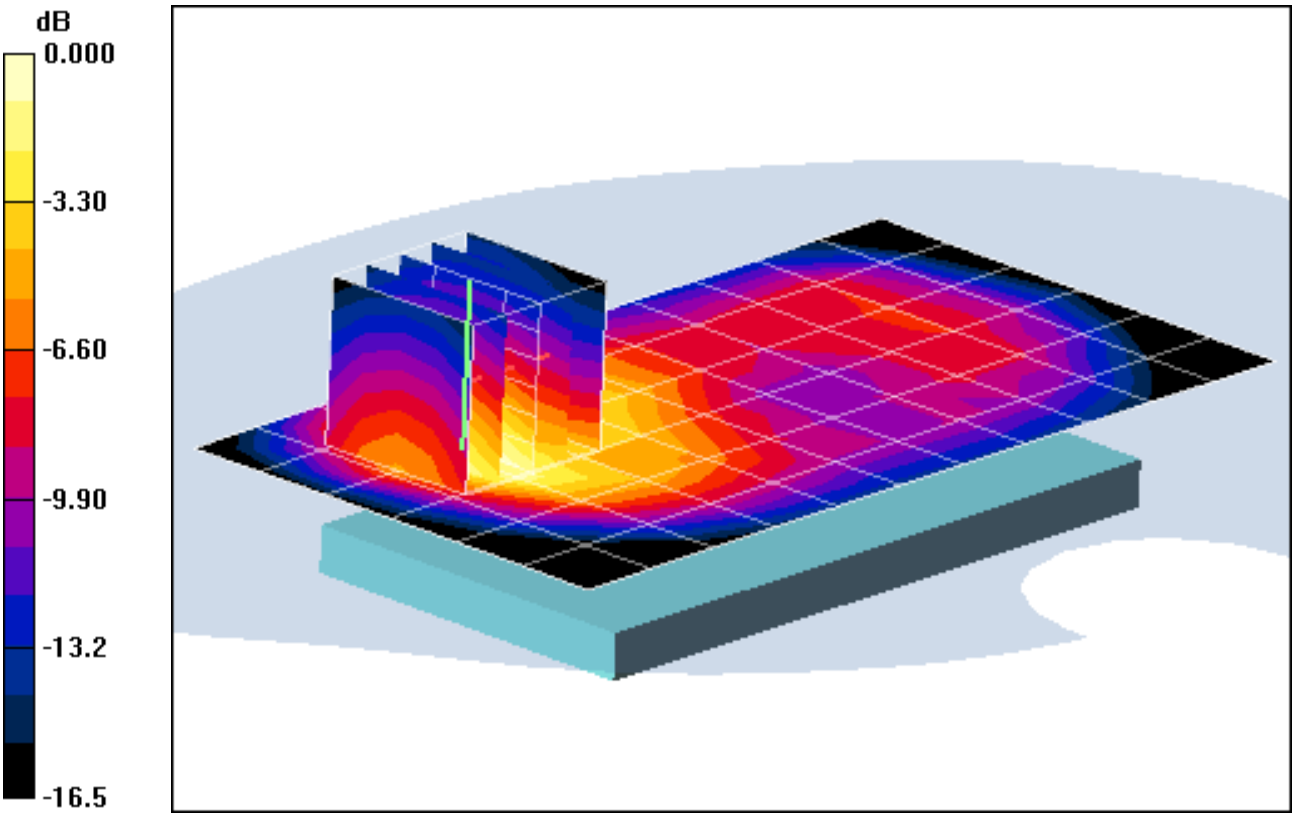

0 dB = 0.777mW/g

PCTEST ENGINEERING LABORATORY, INC.

DUT: A3LSGHI937; Type: 850/1900 GSM/GPRS/EDGE/WCDMA/HSPA Phone with Bluetooth and WLAN; Serial: FI-195-A

Communication System: WCDMA1900; Frequency: 1880 MHz;Duty Cycle: 1:1
Medium: 1900 Body; Medium parameters used:
f = 1880 MHz; σ = 1.476 mho/m; ε_r = 51.4; ρ = 1000 kg/m^3
Phantom section: Flat Section; Space: 1.0 cm

Test Date: 08-04-2011; Ambient Temp: 24.7°C; Tissue Temp: 23.1°C

Probe: ES3DV2 - SN3022; ConvF(4.34, 4.34, 4.34); Calibrated: 9/21/2010
Sensor-Surface: 4mm (Mechanical Surface Detection)
Electronics: DAE4 Sn704; Calibrated: 3/17/2011
Phantom: SAM with CRP; Type: SAM; Serial: TP1375
Measurement SW: DASY4, V4.7 Build 80; Postprocessing SW: SEMCAD, V1.8 Build 186

Mode: WCDMA 1900, Body SAR, Back side, Mid.ch

Area Scan (7x12x1): Measurement grid: dx=15mm, dy=15mm
Zoom Scan (5x5x7)/Cube 0: Measurement grid: dx=8mm, dy=8mm, dz=5mm
Reference Value = 24.5 V/m
Peak SAR (extrapolated) = 1.15 W/kg
SAR(1 g) = 0.705 mW/g; SAR(10 g) = 0.375 mW/g

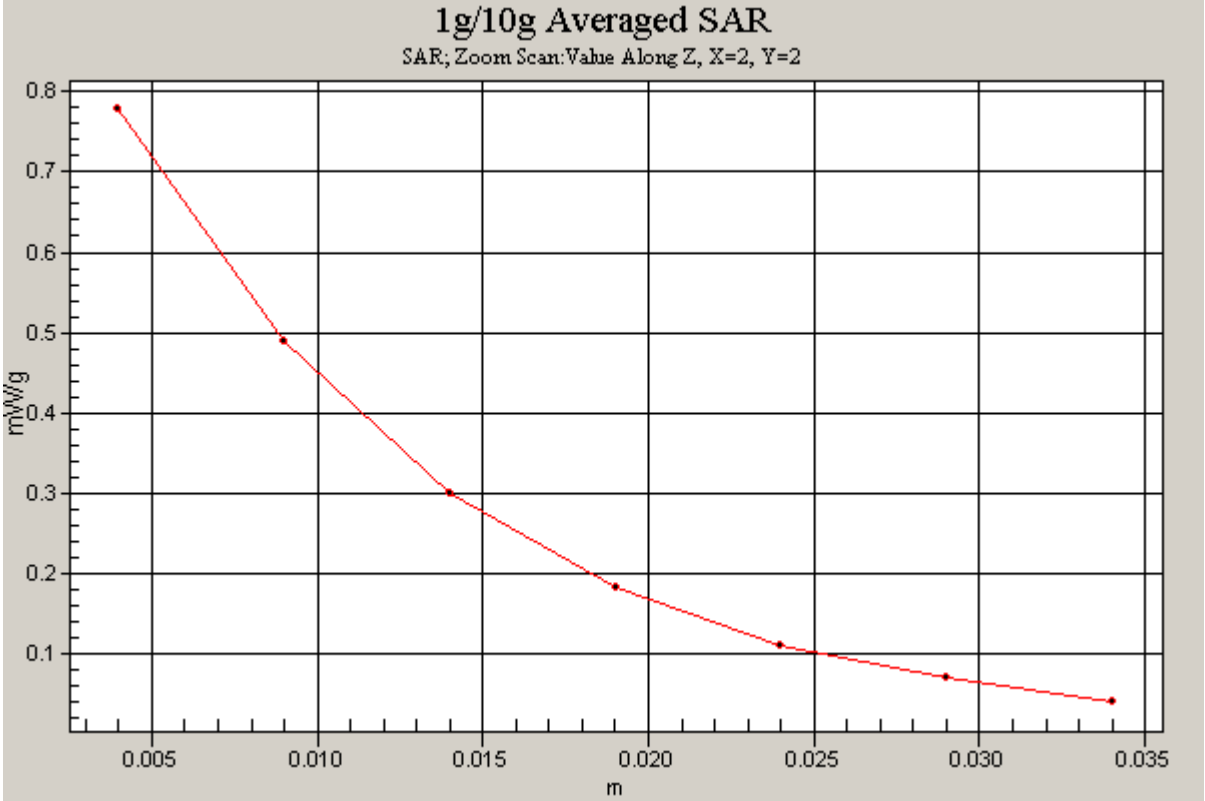

PCTEST ENGINEERING LABORATORY, INC.

DUT: A3LSGHI937; Type: 850/1900 GSM/GPRS/EDGE/WCDMA/HSPA Phone with Bluetooth and WLAN; Serial: FI-195-A

Communication System: WCDMA1900; Frequency: 1880 MHz;Duty Cycle: 1:1
Medium: 1900 Body; Medium parameters used:
f = 1880 MHz; σ = 1.476 mho/m; ε_r = 51.4; ρ = 1000 kg/m^3
Phantom section: Flat Section; Space: 1.0 cm

Test Date: 08-04-2011; Ambient Temp: 24.7°C; Tissue Temp: 23.1°C

Probe: ES3DV2 - SN3022; ConvF(4.34, 4.34, 4.34); Calibrated: 9/21/2010
Sensor-Surface: 4mm (Mechanical Surface Detection)
Electronics: DAE4 Sn704; Calibrated: 3/17/2011
Phantom: SAM with CRP; Type: SAM; Serial: TP1375
Measurement SW: DASY4, V4.7 Build 80; Postprocessing SW: SEMCAD, V1.8 Build 186

Mode: WCDMA 1900, Body SAR, Front side, Mid.ch

Area Scan (7x12x1): Measurement grid: dx=15mm, dy=15mm
Zoom Scan (5x5x7)/Cube 0: Measurement grid: dx=8mm, dy=8mm, dz=5mm
Reference Value = 14.9 V/m
Peak SAR (extrapolated) = 0.526 W/kg
SAR(1 g) = 0.325 mW/g; SAR(10 g) = 0.182 mW/g

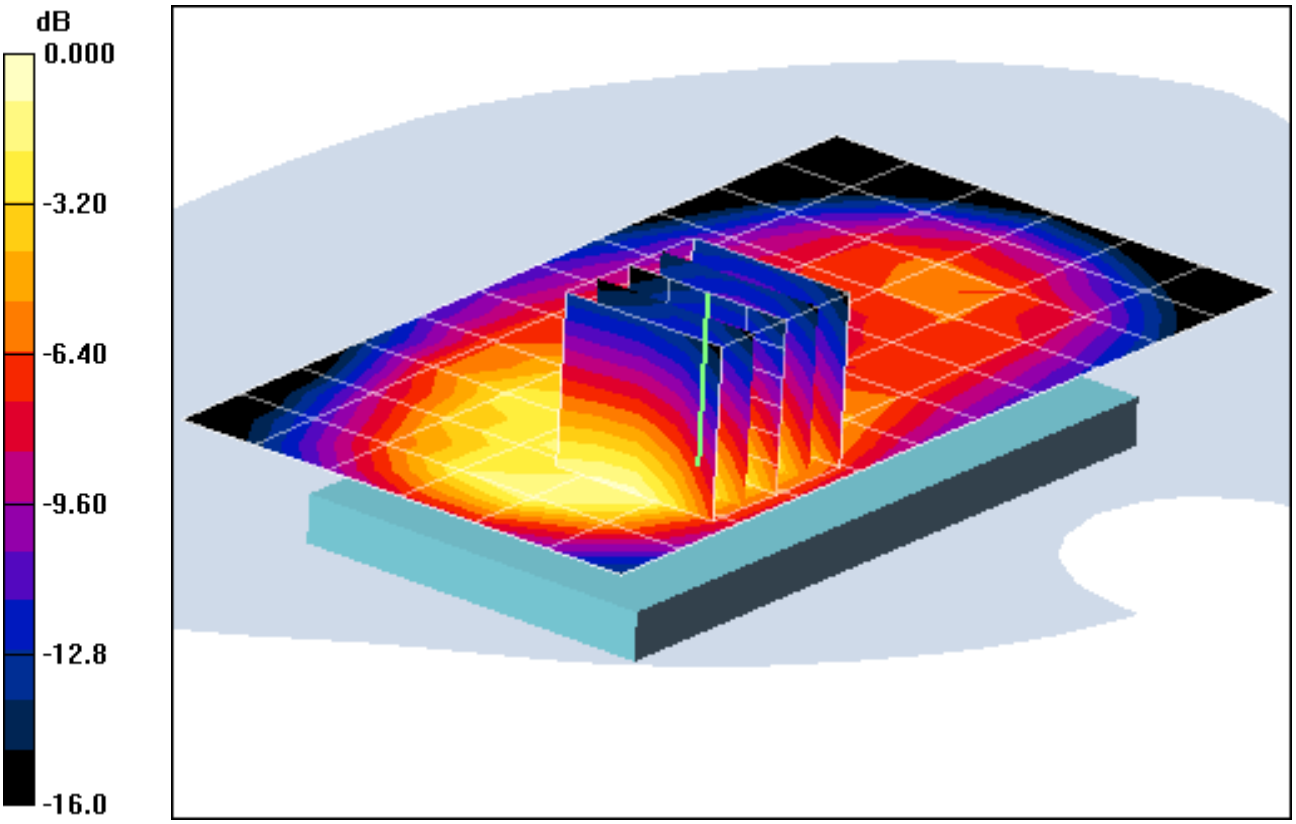

0 dB = 0.366mW/g

PCTEST ENGINEERING LABORATORY, INC.

DUT: A3LSGHI937; Type: 850/1900 GSM/GPRS/EDGE/WCDMA/HSPA Phone with Bluetooth and WLAN; Serial: FI-195-A

Communication System: WCDMA1900; Frequency: 1880 MHz;Duty Cycle: 1:1
Medium: 1900 Body; Medium parameters used:
f = 1880 MHz; σ = 1.476 mho/m; ε_r = 51.4; ρ = 1000 kg/m^3
Phantom section: Flat Section; Space: 1.0 cm

Test Date: 08-04-2011; Ambient Temp: 24.7°C; Tissue Temp: 23.1°C

Probe: ES3DV2 - SN3022; ConvF(4.34, 4.34, 4.34); Calibrated: 9/21/2010
Sensor-Surface: 4mm (Mechanical Surface Detection)
Electronics: DAE4 Sn704; Calibrated: 3/17/2011
Phantom: SAM with CRP; Type: SAM; Serial: TP1375
Measurement SW: DASY4, V4.7 Build 80; Postprocessing SW: SEMCAD, V1.8 Build 186

Mode: WCDMA 1900, Body SAR, Bottom Edge, Mid.ch

Area Scan (5x7x1): Measurement grid: dx=15mm, dy=15mm
Zoom Scan (5x5x7)/Cube 0: Measurement grid: dx=8mm, dy=8mm, dz=5mm
Reference Value = 19.3 V/m
Peak SAR (extrapolated) = 0.729 W/kg
SAR(1 g) = 0.473 mW/g; SAR(10 g) = 0.268 mW/g

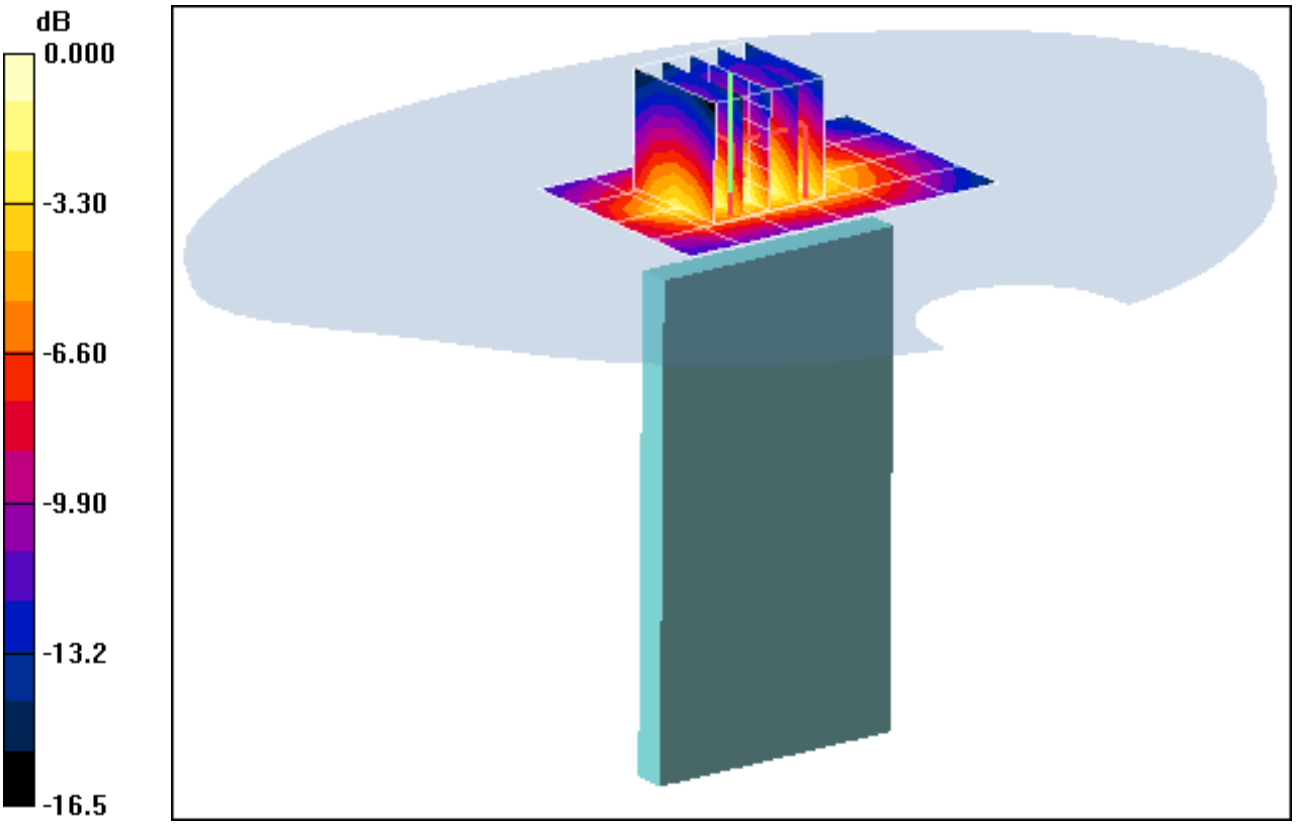

0 dB = 0.536mW/g

PCTEST ENGINEERING LABORATORY, INC.

DUT: A3LSGHI937; Type: 850/1900 GSM/GPRS/EDGE/WCDMA/HSPA Phone with Bluetooth and WLAN; Serial: FI-195-A

Communication System: WCDMA1900; Frequency: 1880 MHz;Duty Cycle: 1:1
Medium: 1900 Body; Medium parameters used:
f = 1880 MHz; σ = 1.476 mho/m; ε_r = 51.4; ρ = 1000 kg/m^3
Phantom section: Flat Section; Space: 1.0 cm

Test Date: 08-04-2011; Ambient Temp: 24.7°C; Tissue Temp: 23.1°C

Probe: ES3DV2 - SN3022; ConvF(4.34, 4.34, 4.34); Calibrated: 9/21/2010
Sensor-Surface: 4mm (Mechanical Surface Detection)
Electronics: DAE4 Sn704; Calibrated: 3/17/2011
Phantom: SAM with CRP; Type: SAM; Serial: TP1375
Measurement SW: DASY4, V4.7 Build 80; Postprocessing SW: SEMCAD, V1.8 Build 186

Mode: WCDMA 1900, Body SAR, Right Edge, Mid.ch

Area Scan (5x13x1): Measurement grid: dx=15mm, dy=15mm
Zoom Scan (5x5x7)/Cube 0: Measurement grid: dx=8mm, dy=8mm, dz=5mm
Reference Value = 11.1 V/m
Peak SAR (extrapolated) = 0.228 W/kg
SAR(1 g) = 0.148 mW/g; SAR(10 g) = 0.086 mW/g

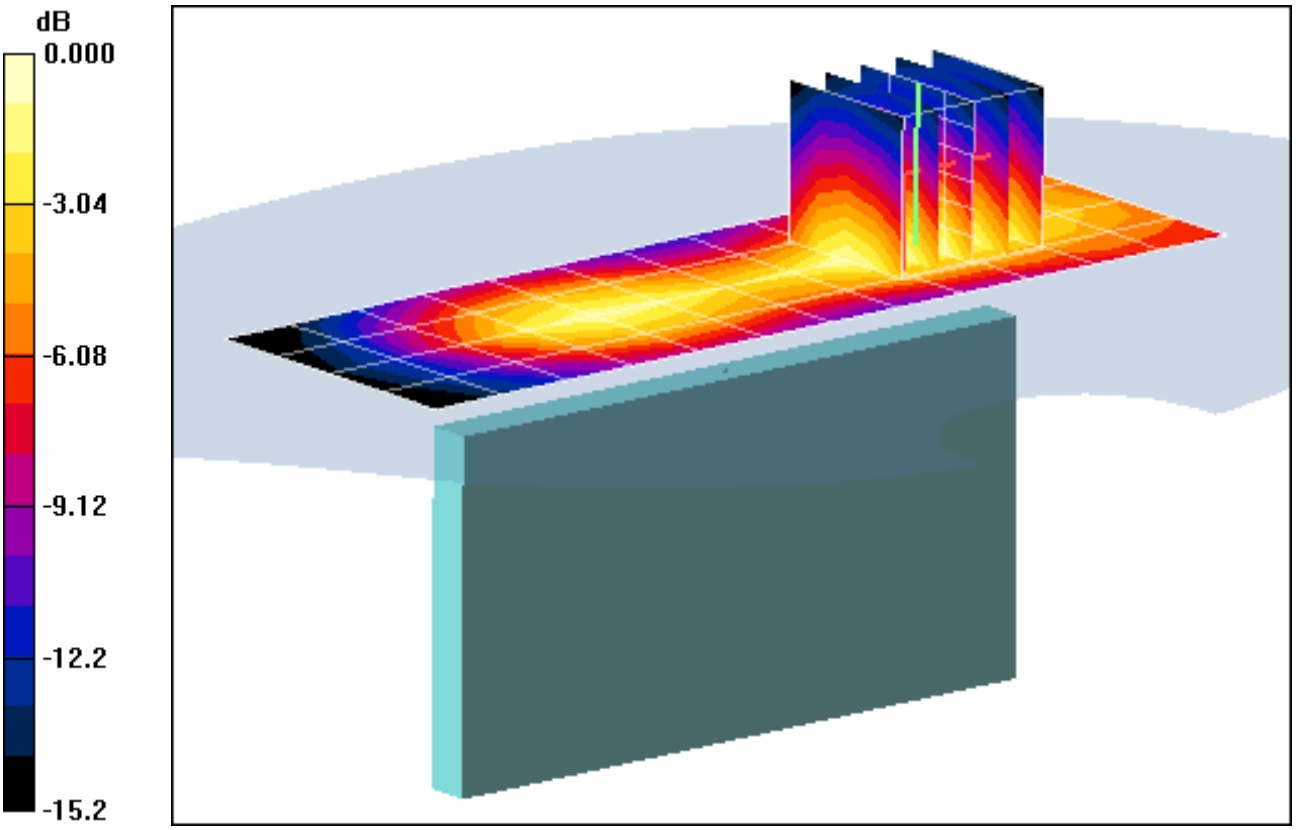

0 dB = 0.164mW/g

PCTEST ENGINEERING LABORATORY, INC.

DUT: A3LSGHI937; Type: 850/1900 GSM/GPRS/EDGE/WCDMA/HSPA Phone with Bluetooth and WLAN; Serial: FI-195-A

Communication System: WCDMA1900; Frequency: 1880 MHz;Duty Cycle: 1:1
Medium: 1900 Body; Medium parameters used:
f = 1880 MHz; σ = 1.476 mho/m; ε_r = 51.4; ρ = 1000 kg/m^3
Phantom section: Flat Section; Space: 1.0 cm

Test Date: 08-04-2011; Ambient Temp: 24.7°C; Tissue Temp: 23.1°C

Probe: ES3DV2 - SN3022; ConvF(4.34, 4.34, 4.34); Calibrated: 9/21/2010
Sensor-Surface: 4mm (Mechanical Surface Detection)
Electronics: DAE4 Sn704; Calibrated: 3/17/2011
Phantom: SAM with CRP; Type: SAM; Serial: TP1375
Measurement SW: DASY4, V4.7 Build 80; Postprocessing SW: SEMCAD, V1.8 Build 186

Mode: WCDMA 1900, Body SAR, Left Edge, Mid.ch

Area Scan (5x13x1): Measurement grid: dx=15mm, dy=15mm
Zoom Scan (5x5x7)/Cube 0: Measurement grid: dx=8mm, dy=8mm, dz=5mm
Reference Value = 5.65 V/m
Peak SAR (extrapolated) = 0.060 W/kg
SAR(1 g) = 0.041 mW/g; SAR(10 g) = 0.025 mW/g

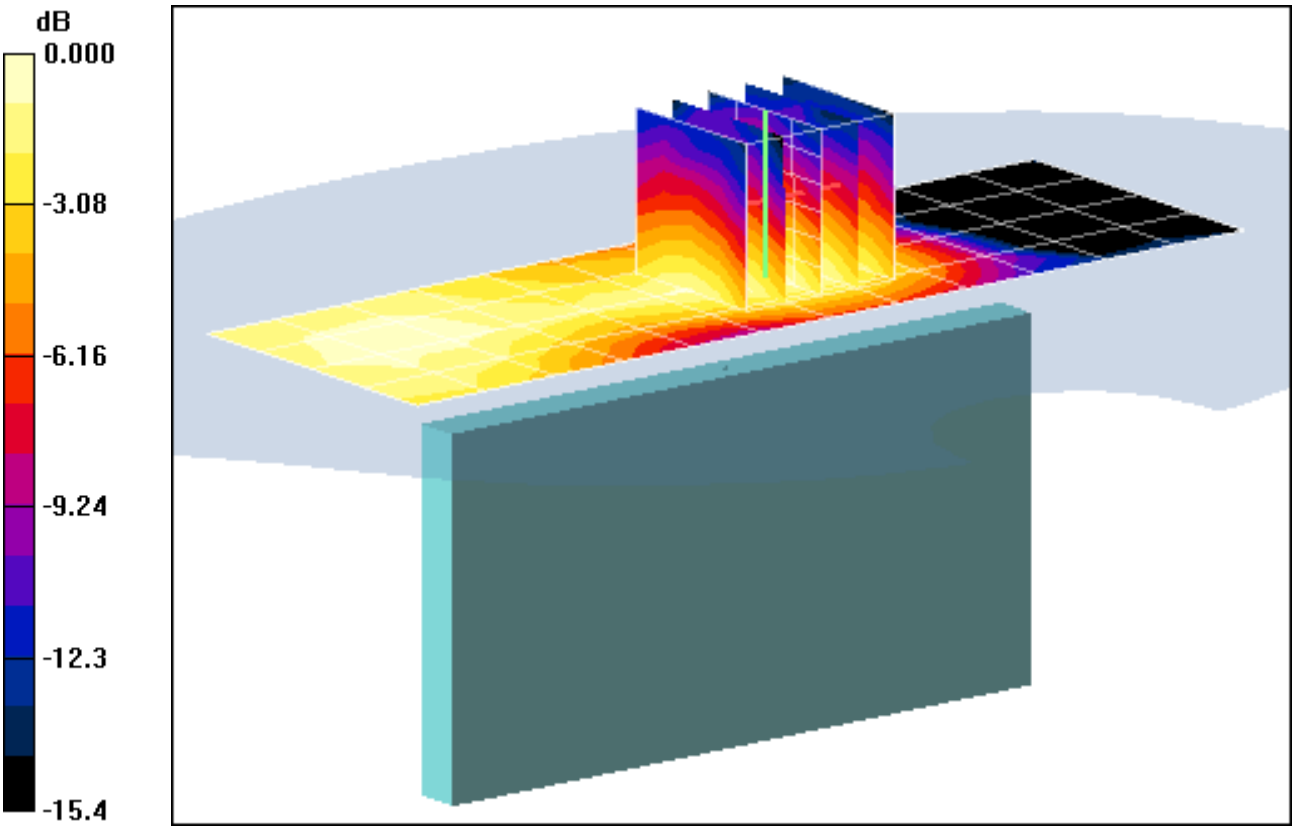

0 dB = 0.046mW/g

PCTEST ENGINEERING LABORATORY, INC.

DUT: A3LSGHI937; Type: 850/1900 GSM/GPRS/EDGE/WCDMA/HSPA Phone with Bluetooth and WLAN; Serial: FI-195-C

Communication System: IEEE 802.11b; Frequency: 2462 MHz;Duty Cycle: 1:1
Medium: 2450 Body Medium parameters used (interpolated):
f = 2462 MHz; σ = 1.88 mho/m; ε_r = 52.2; ρ = 1000 kg/m^3
Phantom section: Flat Section; Space 1.0 cm

Test Date: 08-10-2011; Ambient Temp: 24.5°C; Tissue Temp: 23.1°C

Probe: ES3DV3 - SN3209; ConvF(4.15, 4.15, 4.15); Calibrated: 4/18/2011
Sensor-Surface: 3mm (Mechanical Surface Detection)
Electronics: DAE4 Sn704; Calibrated: 3/17/2011
Phantom: SAM with CRP; Type: SAM; Serial: TP1375
Measurement SW: DASY4, V4.7 Build 80; Postprocessing SW: SEMCAD, V1.8 Build 186

Mode: IEEE 802.11b, Body SAR, Ch 11, 1 Mbps, Back Side

Area Scan (7x12x1): Measurement grid: dx=15mm, dy=15mm
Zoom Scan (5x5x7)/Cube 0: Measurement grid: dx=8mm, dy=8mm, dz=5mm
Reference Value = 4.57 V/m
Peak SAR (extrapolated) = 0.106 W/kg
SAR(1 g) = 0.044 mW/g; SAR(10 g) = 0.018 mW/g

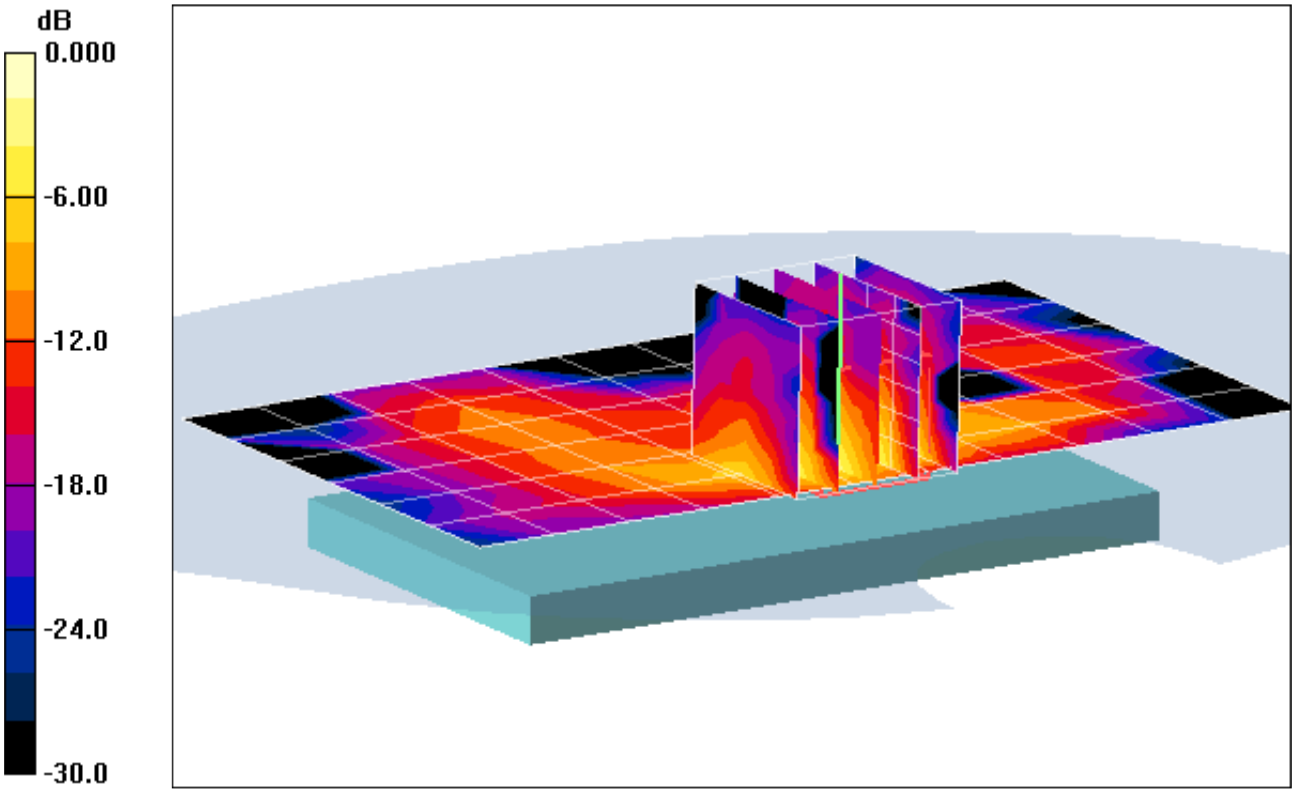

0 dB = 0.054mW/g

PCTEST ENGINEERING LABORATORY, INC.

DUT: A3LSGHI937; Type: 850/1900 GSM/GPRS/EDGE/WCDMA/HSPA Phone with Bluetooth and WLAN; Serial: FI-195-C

Communication System: IEEE 802.11b; Frequency: 2462 MHz;Duty Cycle: 1:1
Medium: 2450 Body Medium parameters used (interpolated):
f = 2462 MHz; σ = 1.88 mho/m; ε_r = 52.2; ρ = 1000 kg/m^3
Phantom section: Flat Section; Space 1.0 cm

Test Date: 08-10-2011; Ambient Temp: 24.5°C; Tissue Temp: 23.1°C

Probe: ES3DV3 - SN3209; ConvF(4.15, 4.15, 4.15); Calibrated: 4/18/2011
Sensor-Surface: 3mm (Mechanical Surface Detection)
Electronics: DAE4 Sn704; Calibrated: 3/17/2011
Phantom: SAM with CRP; Type: SAM; Serial: TP1375
Measurement SW: DASY4, V4.7 Build 80; Postprocessing SW: SEMCAD, V1.8 Build 186

Mode: IEEE 802.11b, Body SAR, Ch 11, 1 Mbps, Back Side

Area Scan (7x12x1): Measurement grid: dx=15mm, dy=15mm
Zoom Scan (5x5x7)/Cube 0: Measurement grid: dx=8mm, dy=8mm, dz=5mm
Reference Value = 4.57 V/m
Peak SAR (extrapolated) = 0.106 W/kg
SAR(1 g) = 0.044 mW/g; SAR(10 g) = 0.018 mW/g

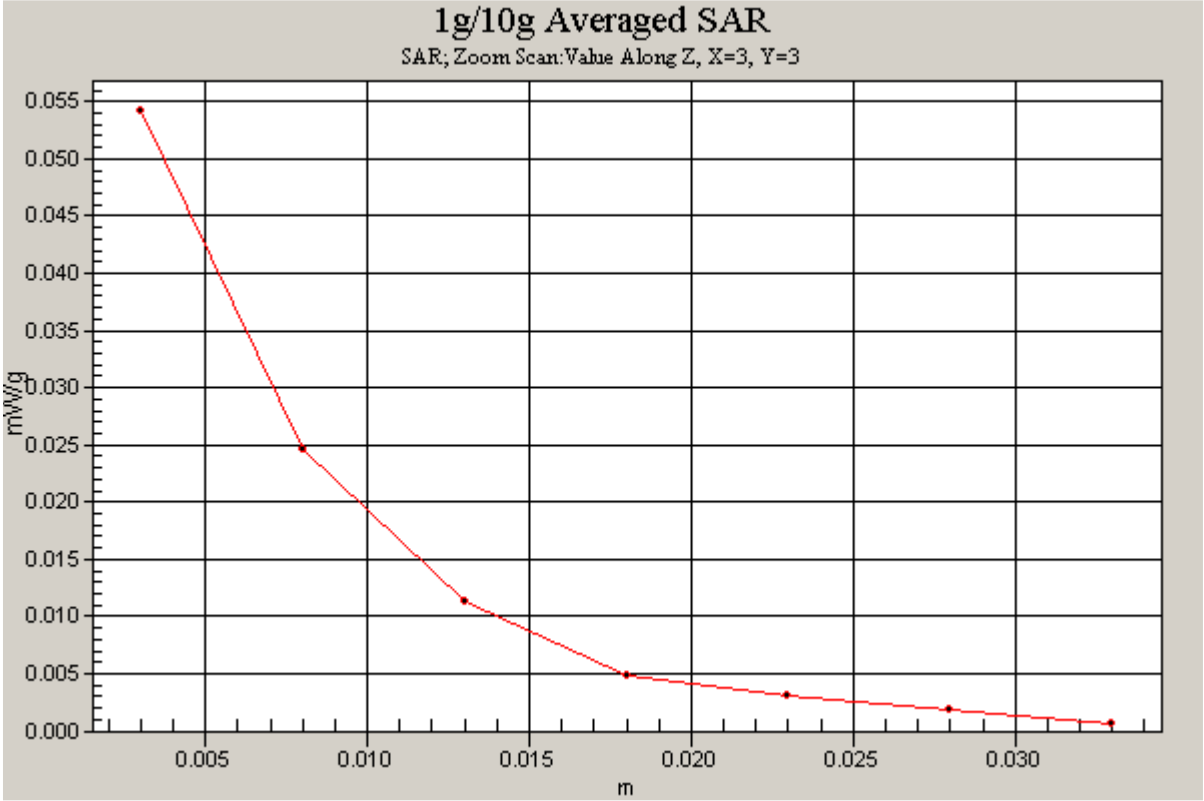

PCTEST ENGINEERING LABORATORY, INC.

DUT: A3LSGHI937; Type: 850/1900 GSM/GPRS/EDGE/WCDMA/HSPA Phone with Bluetooth and WLAN; Serial: FI-195-C

Communication System: IEEE 802.11b; Frequency: 2462 MHz;Duty Cycle: 1:1
Medium: 2450 Body Medium parameters used (interpolated):
f = 2462 MHz; σ = 1.88 mho/m; ε_r = 52.2; ρ = 1000 kg/m^3
Phantom section: Flat Section; space: 1.0 cm

Test Date: 08-10-2011; Ambient Temp: 24.5°C; Tissue Temp: 23.1°C

Probe: ES3DV3 - SN3209; ConvF(4.15, 4.15, 4.15); Calibrated: 4/18/2011
Sensor-Surface: 3mm (Mechanical Surface Detection)
Electronics: DAE4 Sn704; Calibrated: 3/17/2011
Phantom: SAM with CRP; Type: SAM; Serial: TP1375
Measurement SW: DASY4, V4.7 Build 80; Postprocessing SW: SEMCAD, V1.8 Build 186

Mode: IEEE 802.11b, Body SAR, Ch 11, 1 Mbps, Front Side

Area Scan (7x12x1): Measurement grid: dx=15mm, dy=15mm
Zoom Scan (5x5x7)/Cube 0: Measurement grid: dx=8mm, dy=8mm, dz=5mm
Reference Value = 2.60 V/m
Peak SAR (extrapolated) = 0.021 W/kg
SAR(1 g) = 0.012 mW/g; SAR(10 g) = 0.00543 mW/g

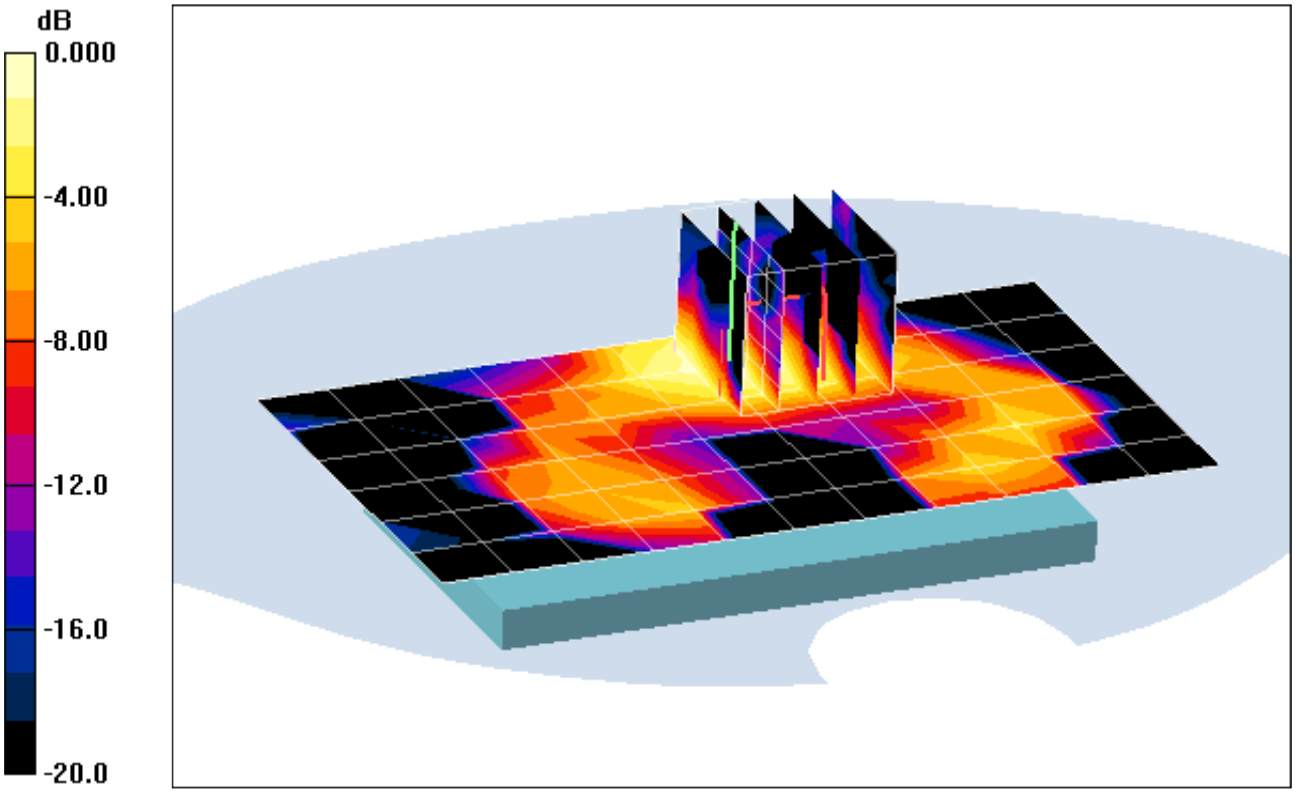

0 dB = 0.015mW/g

PCTEST ENGINEERING LABORATORY, INC.

DUT: A3LSGHI937; Type: 850/1900 GSM/GPRS/EDGE/WCDMA/HSPA Phone with Bluetooth and WLAN; Serial: FI-195-C

Communication System: IEEE 802.11b; Frequency: 2462 MHz;Duty Cycle: 1:1
Medium: 2450 Body Medium parameters used (interpolated):
f = 2462 MHz; σ = 1.88 mho/m; ε_r = 52.2; ρ = 1000 kg/m^3
Phantom section: Flat Section; Space: 1.0 cm

Test Date: 08-10-2011; Ambient Temp: 24.5°C; Tissue Temp: 23.1°C

Probe: ES3DV3 - SN3209; ConvF(4.15, 4.15, 4.15); Calibrated: 4/18/2011
Sensor-Surface: 3mm (Mechanical Surface Detection)
Electronics: DAE4 Sn704; Calibrated: 3/17/2011
Phantom: SAM with CRP; Type: SAM; Serial: TP1375
Measurement SW: DASY4, V4.7 Build 80; Postprocessing SW: SEMCAD, V1.8 Build 186

Mode: IEEE 802.11b, Body SAR, Ch 11, 1 Mbps, Left Edge

Area Scan (5x13x1): Measurement grid: dx=15mm, dy=15mm
Zoom Scan (5x5x7)/Cube 0: Measurement grid: dx=8mm, dy=8mm, dz=5mm
Reference Value = 4.53 V/m
Peak SAR (extrapolated) = 0.068 W/kg
SAR(1 g) = 0.031 mW/g; SAR(10 g) = 0.013 mW/g

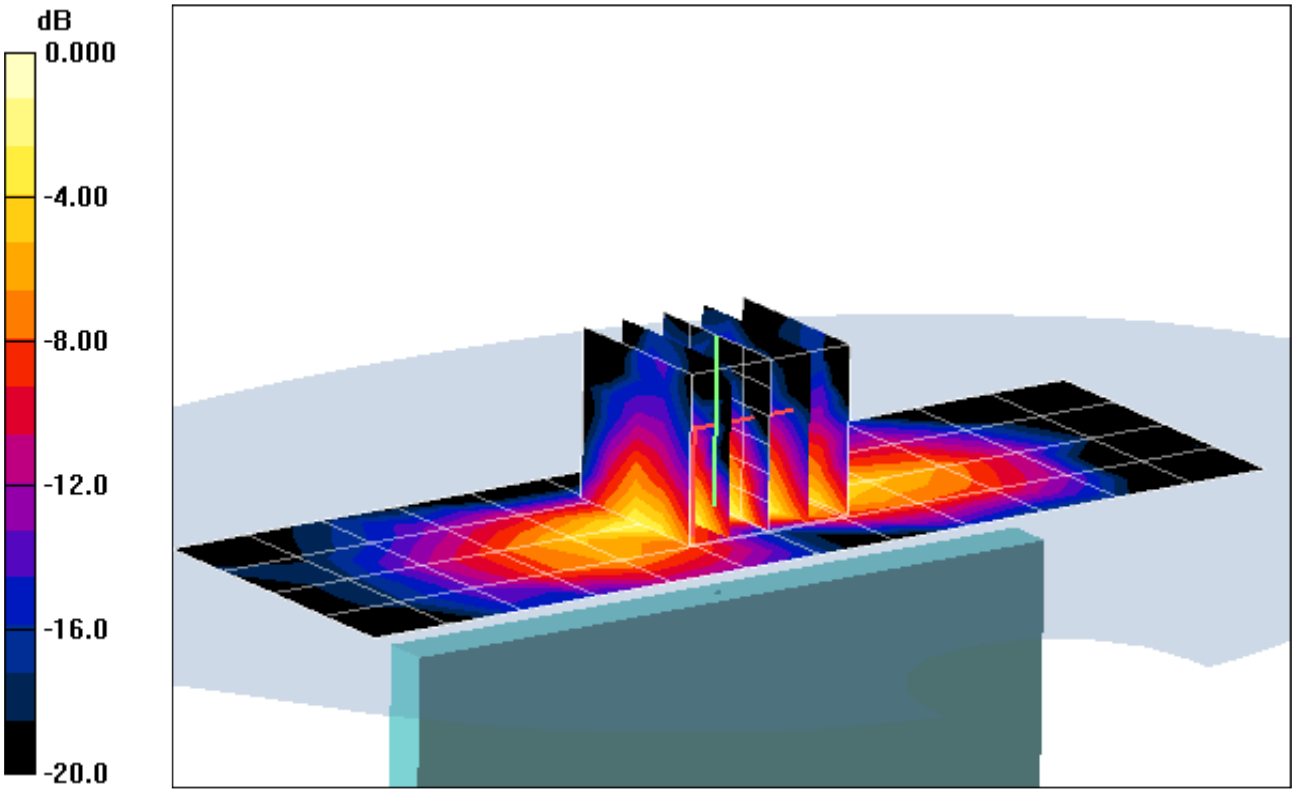

0 dB = 0.044mW/g

PCTEST ENGINEERING LABORATORY, INC.

DUT: A3LSGHI937; Type: 850/1900 GSM/GPRS/EDGE/WCDMA/HSPA Phone with Bluetooth and WLAN; Serial: FI-195-A

Communication System: IEEE 802.11a 5.2-5.8 GHz Band; Frequency: 5500 MHz;Duty Cycle: 1:1
Medium: 5 GHz Body Medium parameters used (interpolated):
f = 5500 MHz; σ = 5.52 mho/m; ε_r = 47; ρ = 1000 kg/m^3
Phantom section: Flat Section; Space: 1.0 cm

Test Date: 08-10-2011; Ambient Temp: 23.5 °C; Tissue Temp: 21.7 °C

Probe: EX3DV4 - SN3550; ConvF(3.21, 3.21, 3.21); Calibrated: 2/14/2011
Sensor-Surface: 2mm (Mechanical Surface Detection)
Electronics: DAE4 Sn665; Calibrated: 4/20/2011
Phantom: SAM Sub; Type: SAM 4.0; Serial: TP-1357
Measurement SW: DASY4, V4.7 Build 80; Postprocessing SW: SEMCAD, V1.8 Build 186

Mode: IEEE 802.11a, 5.5 GHz, Body SAR, Ch 100, 6 Mbps, Back Side

Area Scan (10x16x1): Measurement grid: dx=10mm, dy=10mm
Zoom Scan (7x7x11)/Cube 0: Measurement grid: dx=4mm, dy=4mm, dz=2mm
Reference Value = 4.13 V/m
Peak SAR (extrapolated) = 0.434 W/kg
SAR(1 g) = 0.116 mW/g; SAR(10 g) = 0.035 mW/g

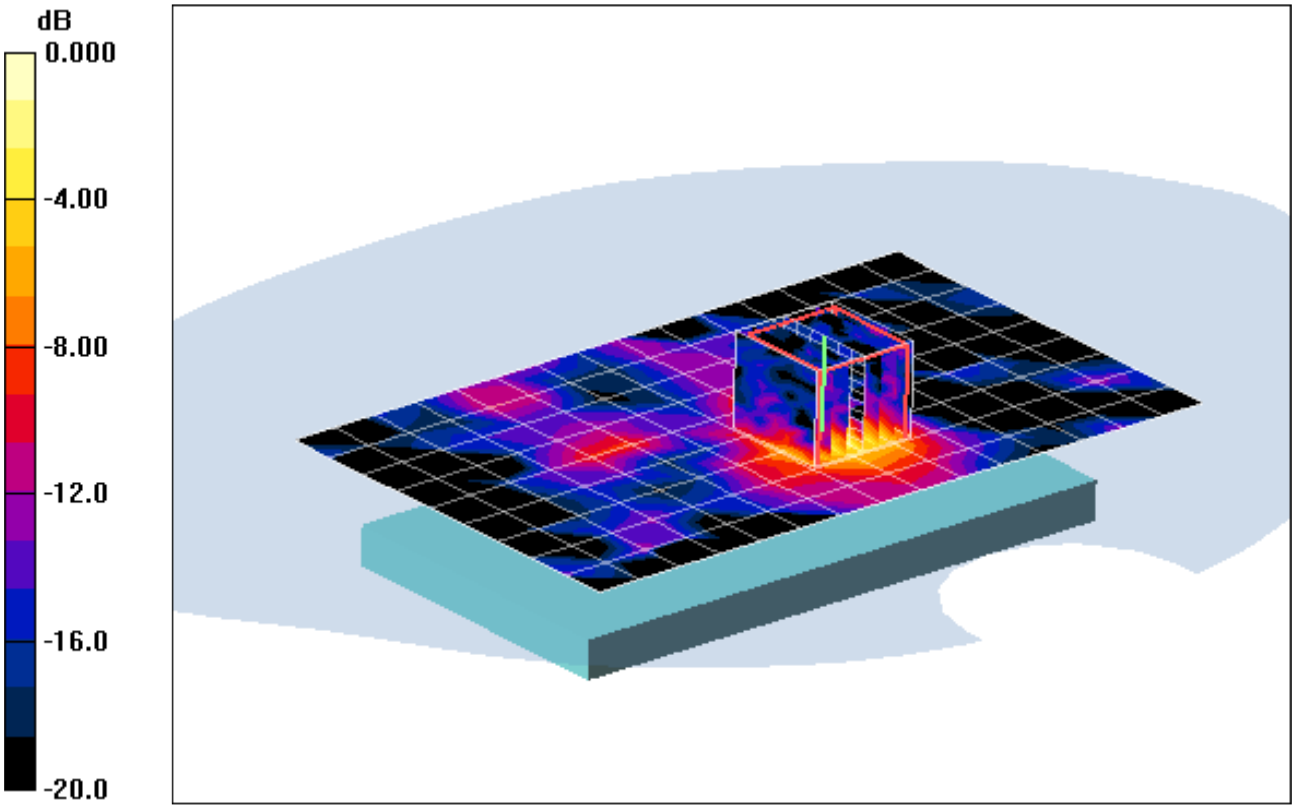

0 dB = 0.235mW/g

PCTEST ENGINEERING LABORATORY, INC.

DUT: A3LSGHI937; Type: 850/1900 GSM/GPRS/EDGE/WCDMA/HSPA Phone with Bluetooth and WLAN; Serial: FI-195-A

Communication System: IEEE 802.11a 5.2-5.8 GHz Band; Frequency: 5500 MHz;Duty Cycle: 1:1
Medium: 5 GHz Body Medium parameters used (interpolated):
f = 5500 MHz; σ = 5.52 mho/m; ε_r = 47; ρ = 1000 kg/m^3
Phantom section: Flat Section; Space: 1.0 cm

Test Date: 08-10-2011; Ambient Temp: 23.5 °C; Tissue Temp: 21.7 °C

Probe: EX3DV4 - SN3550; ConvF(3.21, 3.21, 3.21); Calibrated: 2/14/2011
Sensor-Surface: 2mm (Mechanical Surface Detection)
Electronics: DAE4 Sn665; Calibrated: 4/20/2011
Phantom: SAM Sub; Type: SAM 4.0; Serial: TP-1357
Measurement SW: DASY4, V4.7 Build 80; Postprocessing SW: SEMCAD, V1.8 Build 186

Mode: IEEE 802.11a, 5.5 GHz, Body SAR, Ch 100, 6 Mbps, Back Side

Area Scan (10x16x1): Measurement grid: dx=10mm, dy=10mm
Zoom Scan (7x7x11)/Cube 0: Measurement grid: dx=4mm, dy=4mm, dz=2mm

Reference Value = 4.13 V/m
Peak SAR (extrapolated) = 0.434 W/kg
SAR(1 g) = 0.116 mW/g; SAR(10 g) = 0.035 mW/g

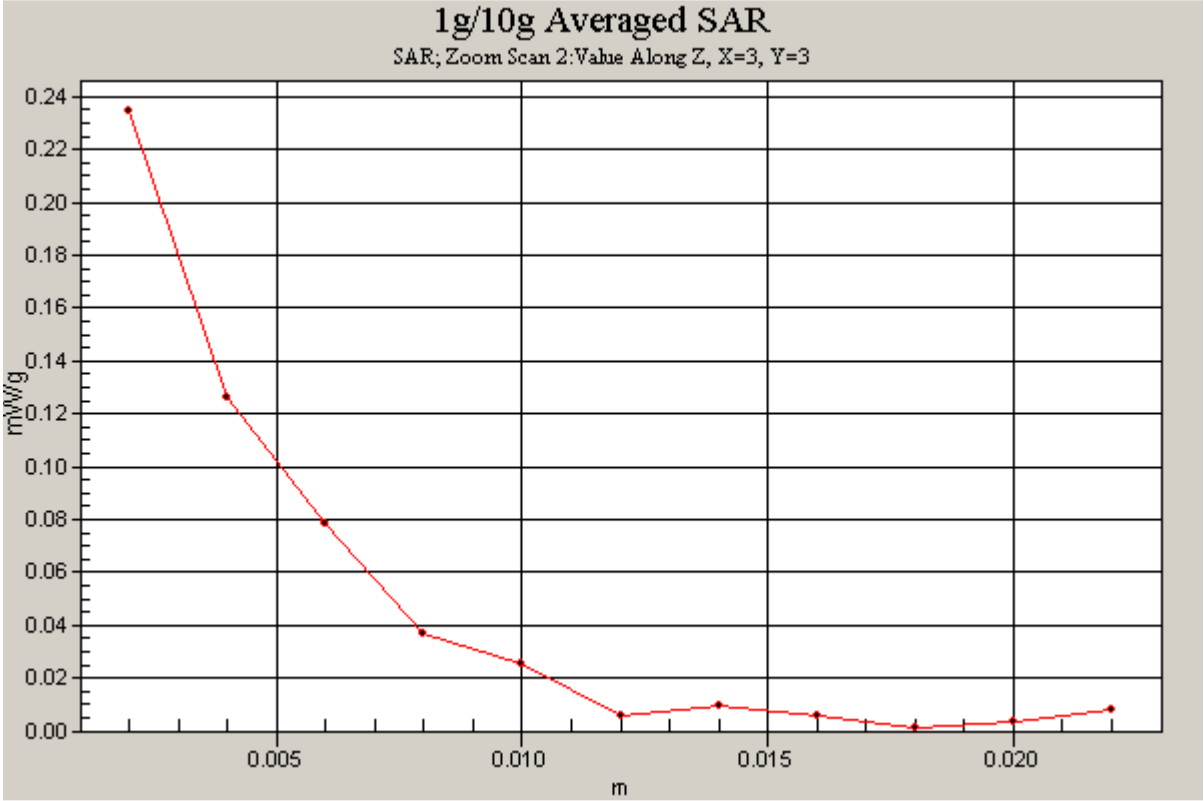

APPENDIX B: DIPOLE VALIDATION

© 2011 PCTEST Engineering Laboratory, Inc.

PCTEST ENGINEERING LABORATORY, INC.

DUT: Dipole 835 MHz; Type: D835V2; Serial: 4d047

Communication System: CW; Frequency: 835 MHz;Duty Cycle: 1:1
Medium: 835 Head Medium parameters used:
f = 835 MHz; σ = 0.943 mho/m; ε_r = 43.14; ρ = 1000 kg/m^3
Phantom section: Flat Section; Space: 1.5 cm

Test Date: 08-09-2011; Ambient Temp: 24.2°C; Tissue Temp: 23.1°C

Probe: EX3DV4 - SN3550; ConvF(8.04, 8.04, 8.04); Calibrated: 2/14/2011
Sensor-Surface: 4mm (Mechanical Surface Detection)
Electronics: DAE4 Sn665; Calibrated: 4/20/2011
Phantom: SAM Main; Type: SAM 4.0; Serial: TP-1114
Measurement SW: DASY4, V4.7 Build 80; Postprocessing SW: SEMCAD, V1.8 Build 186

835MHz System Verification

Area Scan (7x13x1): Measurement grid: dx=15mm, dy=15mm
Zoom Scan (5x5x7)/Cube 0: Measurement grid: dx=8mm, dy=8mm, dz=5mm
Input Power = 20 dBm (100 mW)
SAR(1 g) = 0.994 mW/g; SAR(10 g) = 0.646 mW/g
Deviation = 4.30 %

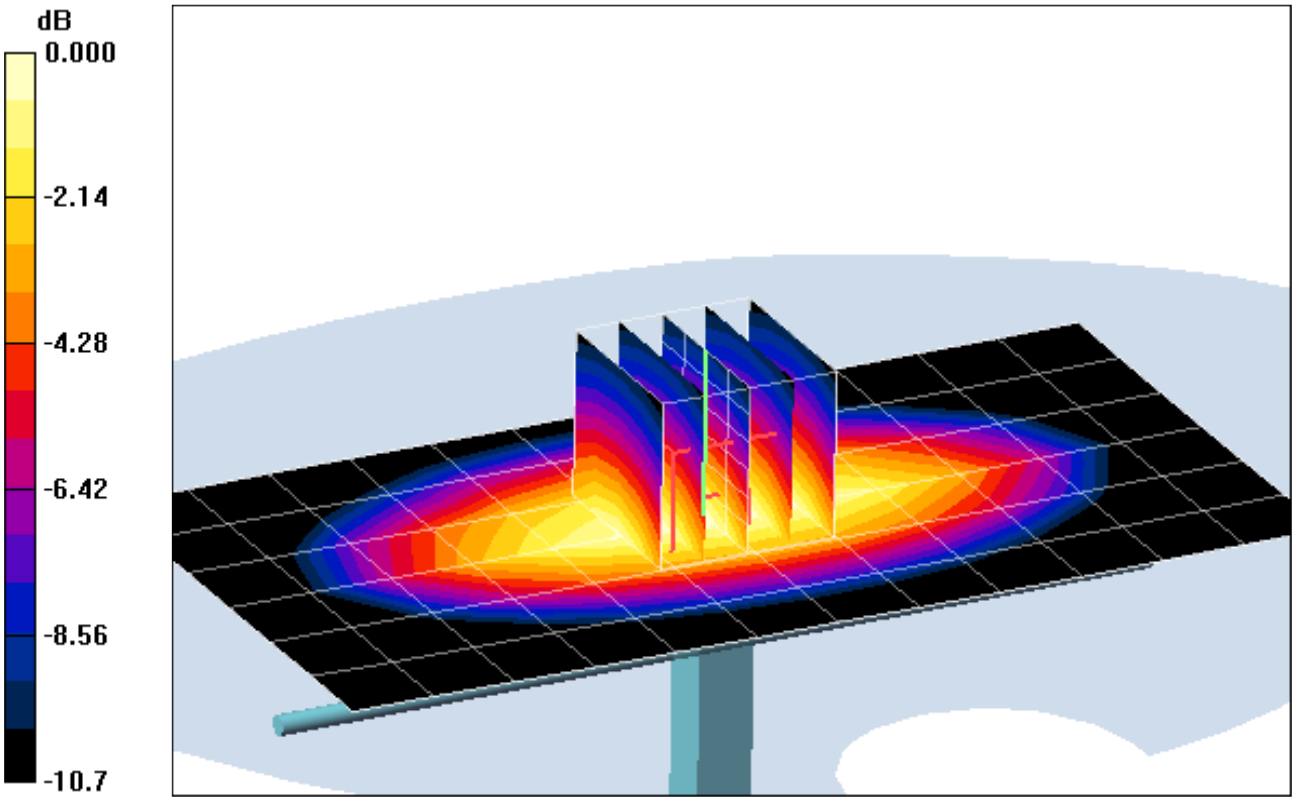

0 dB = 1.08mW/g

PCTEST ENGINEERING LABORATORY, INC.

DUT: Dipole 835 MHz; Type: D835V2; Serial: 4d047

Communication System: CW; Frequency: 835 MHz;Duty Cycle: 1:1
Medium: 835 Body Medium parameters used:
f = 835 MHz; σ = 0.97 mho/m; ε_r = 54.9; ρ = 1000 kg/m^3
Phantom section: Flat Section; Space: 1.5 cm

Test Date: 08-09-2011; Ambient Temp: 24.3°C; Tissue Temp: 23.2°C

Probe: EX3DV4 - SN3550; ConvF(8.11, 8.11, 8.11); Calibrated: 2/14/2011
Sensor-Surface: 4mm (Mechanical Surface Detection)
Electronics: DAE4 Sn665; Calibrated: 4/20/2011
Phantom: SAM Sub; Type: SAM 4.0; Serial: TP-1357
Measurement SW: DASY4, V4.7 Build 80; Postprocessing SW: SEMCAD, V1.8 Build 186

835MHz System Verification

Area Scan (7x13x1): Measurement grid: dx=15mm, dy=15mm
Zoom Scan (5x5x7)/Cube 0: Measurement grid: dx=8mm, dy=8mm, dz=5mm
Input Power = 20 dBm (100 mw)
SAR(1 g) = 0.939 mW/g; SAR(10 g) = 0.616 mW/g
Deviation = -4.67%

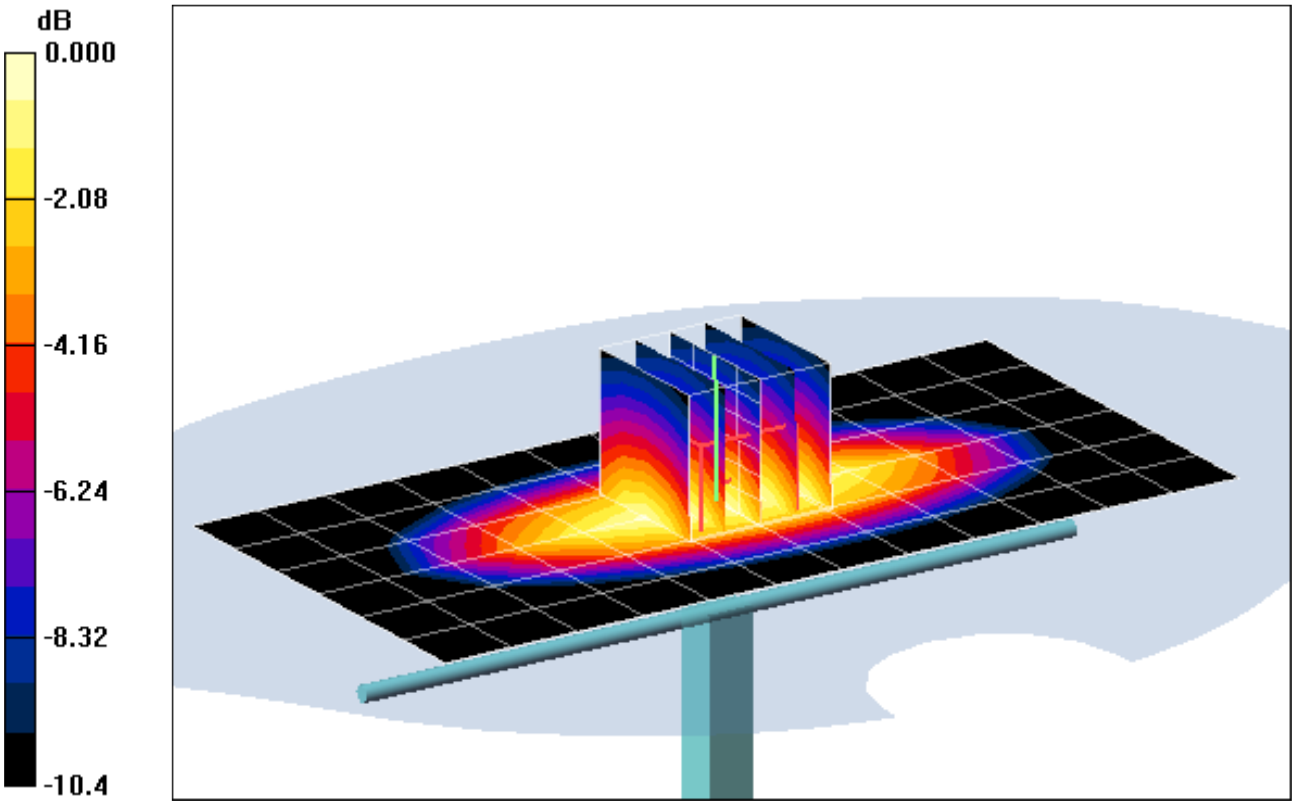

0 dB = 1.02mW/g

PCTEST ENGINEERING LABORATORY, INC.

DUT: SAR Dipole 1900 MHz; Type: D1900V2; Serial: 502

Communication System: CW; Frequency: 1900 MHz;Duty Cycle: 1:1
Medium: 1900 Head; Medium parameters used (interpolated):
f = 1900 MHz; σ = 1.37 mho/m; ε_r = 41.4; ρ = 1000 kg/m^3
Phantom section: Flat Section; Space: 1.0 cm

Test Date: 08-10-2011; Ambient Temp: 23.4°C; Tissue Temp: 22.0°C

Probe: ES3DV3 - SN3209; ConvF(5.11, 5.11, 5.11); Calibrated: 4/18/2011
Sensor-Surface: 4mm (Mechanical Surface Detection)
Electronics: DAE4 Sn704; Calibrated: 3/17/2011
Phantom: SAM Sub Dasy B; Type: SAM 4.0; Serial: TP-1626
Measurement SW: DASY4, V4.7 Build 80; Postprocessing SW: SEMCAD, V1.8 Build 186

1900MHz System Verification

Area Scan (5x7x1): Measurement grid: dx=15mm, dy=15mm
Zoom Scan (5x5x7)/Cube 0: Measurement grid: dx=8mm, dy=8mm, dz=5mm
Input Power = 20.0 dBm (100 mW)
SAR(1 g) = 4.14 mW/g; SAR(10 g) = 2.15 mW/g
Deviation = 2.99 %

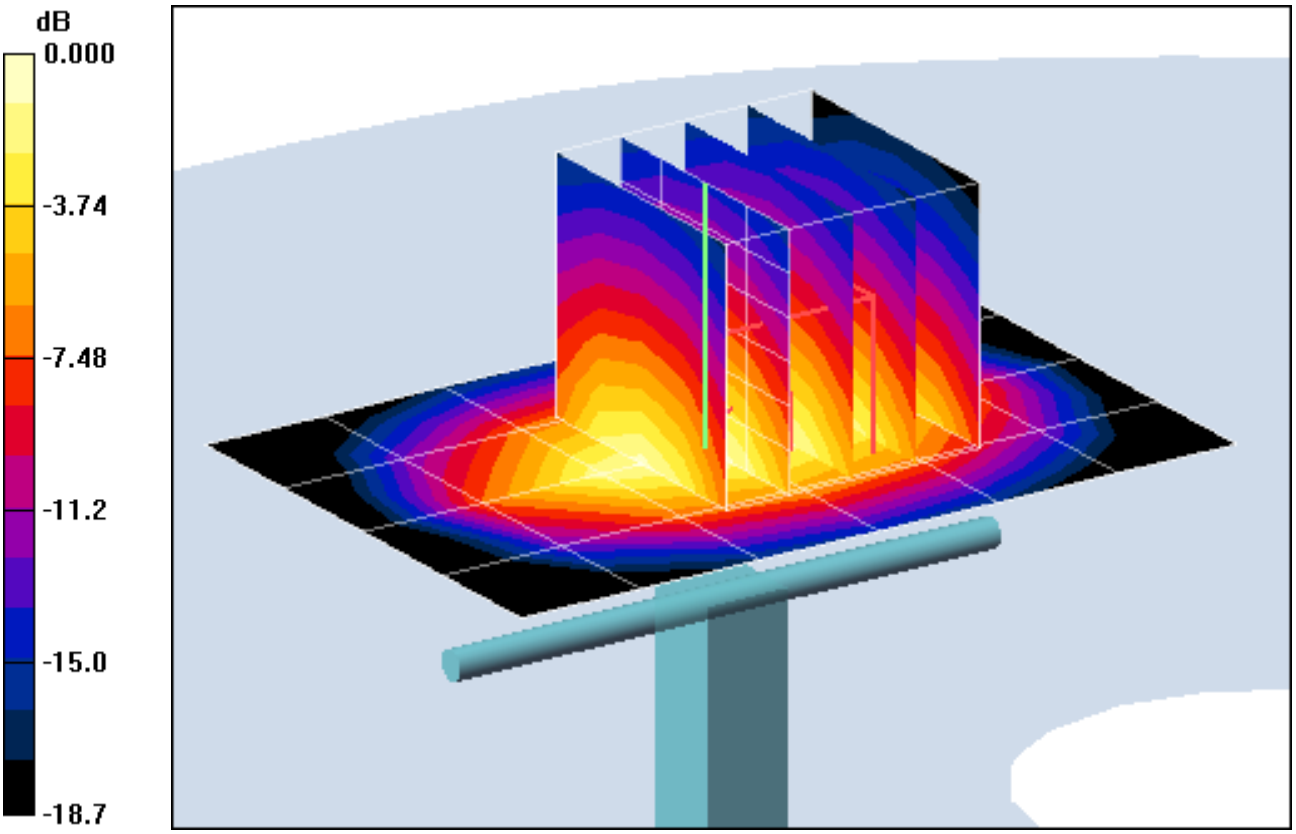

0 dB = 4.61mW/g

PCTEST ENGINEERING LABORATORY, INC.

DUT: SAR Dipole 1900 MHz; Type: D1900V2; Serial: 502

Communication System: CW; Frequency: 1900 MHz;Duty Cycle: 1:1
Medium: 1900 Body; Medium parameters used (interpolated):
f = 1900 MHz; σ = 1.476 mho/m; ε_r = 51.2; ρ = 1000 kg/m^3
Phantom section: Flat Section; Space: 1.0 cm

Test Date: 08-04-2011; Ambient Temp: 24.7°C; Tissue Temp: 23.1°C

Probe: ES3DV2 - SN3022; ConvF(4.34, 4.34, 4.34); Calibrated: 9/21/2010
Sensor-Surface: 4mm (Mechanical Surface Detection)
Electronics: DAE4 Sn704; Calibrated: 3/17/2011
Phantom: SAM with CRP; Type: SAM; Serial: TP1375
Measurement SW: DASY4, V4.7 Build 80; Postprocessing SW: SEMCAD, V1.8 Build 186

1900MHz System Verification

Area Scan (5x7x1): Measurement grid: dx=15mm, dy=15mm
Zoom Scan (5x5x7)/Cube 0: Measurement grid: dx=8mm, dy=8mm, dz=5mm

Input Power = 20.0 dBm (100 mW)
SAR(1 g) = 4.04 mW/g; SAR(10 g) = 2.11 mW/g
Deviation = -1.70 %

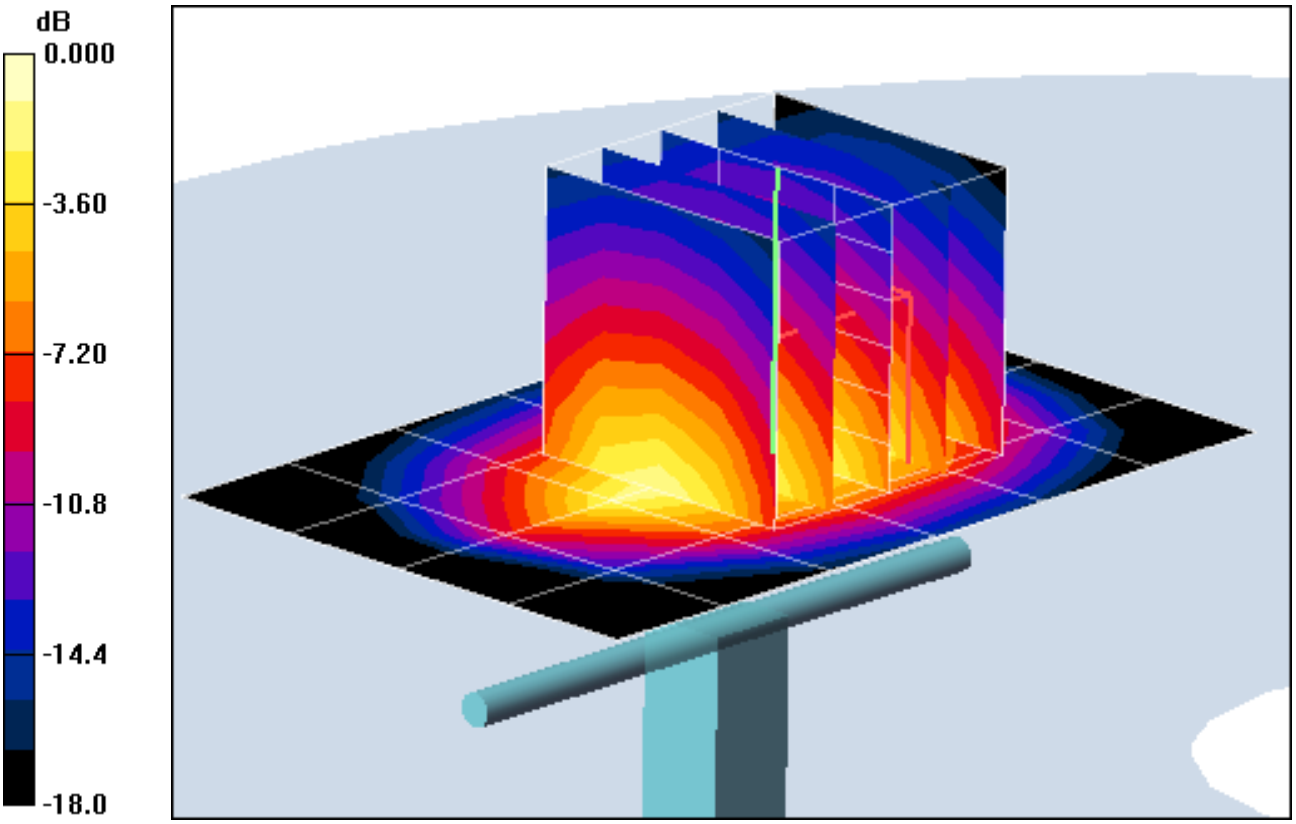

0 dB = 4.50mW/g

PCTEST ENGINEERING LABORATORY, INC.

DUT: SAR Dipole 1900 MHz; Type: D1900V2; Serial: 502

Communication System: CW; Frequency: 1900 MHz;Duty Cycle: 1:1
Medium: 1900 Body; Medium parameters used (interpolated):
f = 1900 MHz; σ = 1.51 mho/m; ε_r = 51.7; ρ = 1000 kg/m^3
Phantom section: Flat Section; Space: 1.0 cm

Test Date: 08-11-2011; Ambient Temp: 23.1°C; Tissue Temp: 22.2°C

Probe: ES3DV3 - SN3209; ConvF(4.48, 4.48, 4.48); Calibrated: 4/18/2011
Sensor-Surface: 4mm (Mechanical Surface Detection)
Electronics: DAE4 Sn704; Calibrated: 3/17/2011
Phantom: SAM with CRP; Type: SAM; Serial: TP1375
Measurement SW: DASY4, V4.7 Build 80; Postprocessing SW: SEMCAD, V1.8 Build 186

1900MHz System Verification

Area Scan (5x7x1): Measurement grid: dx=15mm, dy=15mm
Zoom Scan (5x5x7)/Cube 0: Measurement grid: dx=8mm, dy=8mm, dz=5mm
Input Power = 20.0 dBm (100 mW)
SAR(1 g) = 4.25 mW/g; SAR(10 g) = 2.23 mW/g
Deviation = 3.41%

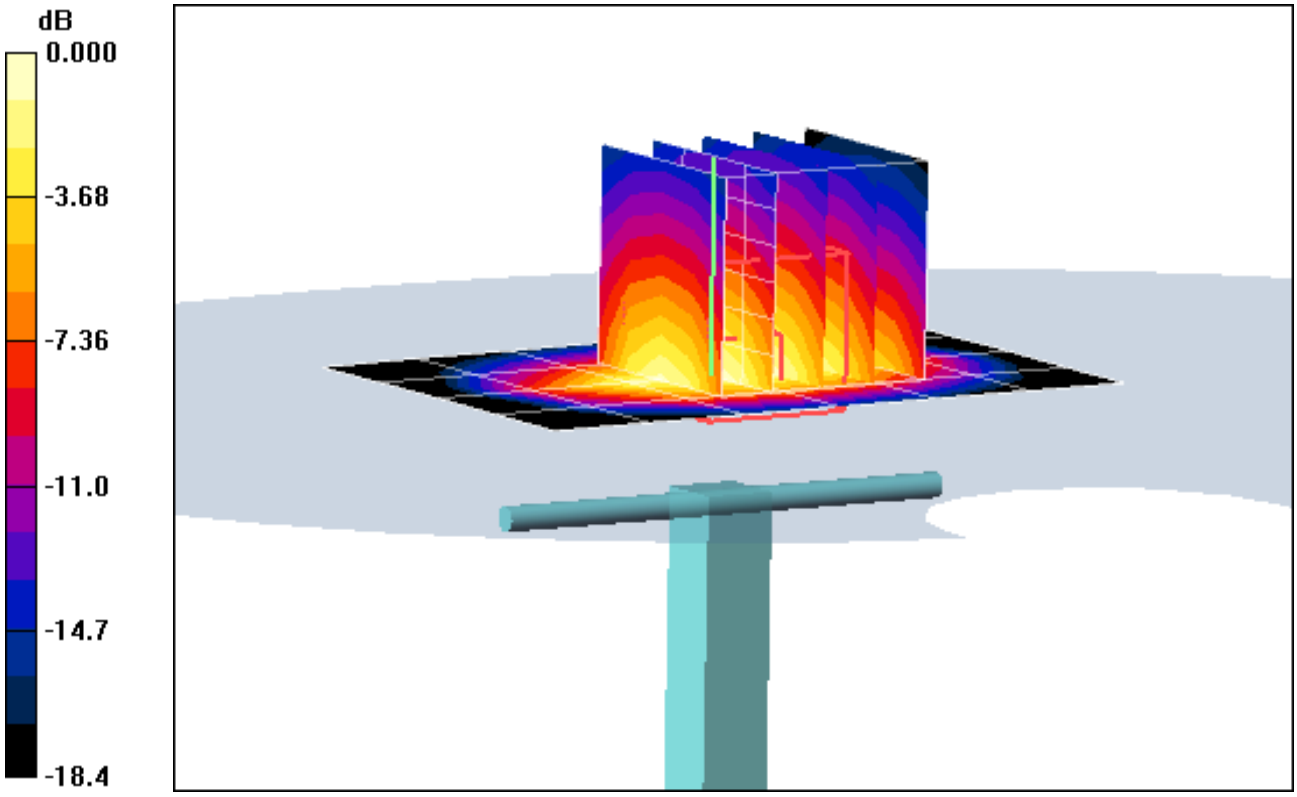

0 dB = 4.68mW/g

PCTEST ENGINEERING LABORATORY, INC.

DUT: SAR Dipole 2450 MHz; Type: D2450V2; Serial: 797

Communication System: CW; Frequency: 2450 MHz;Duty Cycle: 1:1
Medium: 2450 Head Medium parameters used:
f = 2450 MHz; σ = 1.88 mho/m; ε_r = 38; ρ = 1000 kg/m^3
Phantom section: Flat Section; Space: 1.0 cm

Test Date: 08-11-2011; Ambient Temp: 24.0°C; Tissue Temp: 22.9°C

Probe: ES3DV3 - SN3258; ConvF(4.5, 4.5, 4.5); Calibrated: 4/8/2011
Sensor-Surface: 3mm (Mechanical Surface Detection)
Electronics: DAE4 Sn649; Calibrated: 2/21/2011
Phantom: SAM Sub; Type: SAM 4.0; Serial: TP-1357
Measurement SW: DASY4, V4.7 Build 80; Postprocessing SW: SEMCAD, V1.8 Build 186

2450MHz System Verification

Area Scan (5x7x1): Measurement grid: dx=15mm, dy=15mm
Zoom Scan (5x5x7)/Cube 0: Measurement grid: dx=8mm, dy=8mm, dz=5mm
Input Power = 14 dBm (25 mW)
SAR(1 g) = 1.37 mW/g; SAR(10 g) = 0.625 mW/g
Deviation = 2.81%

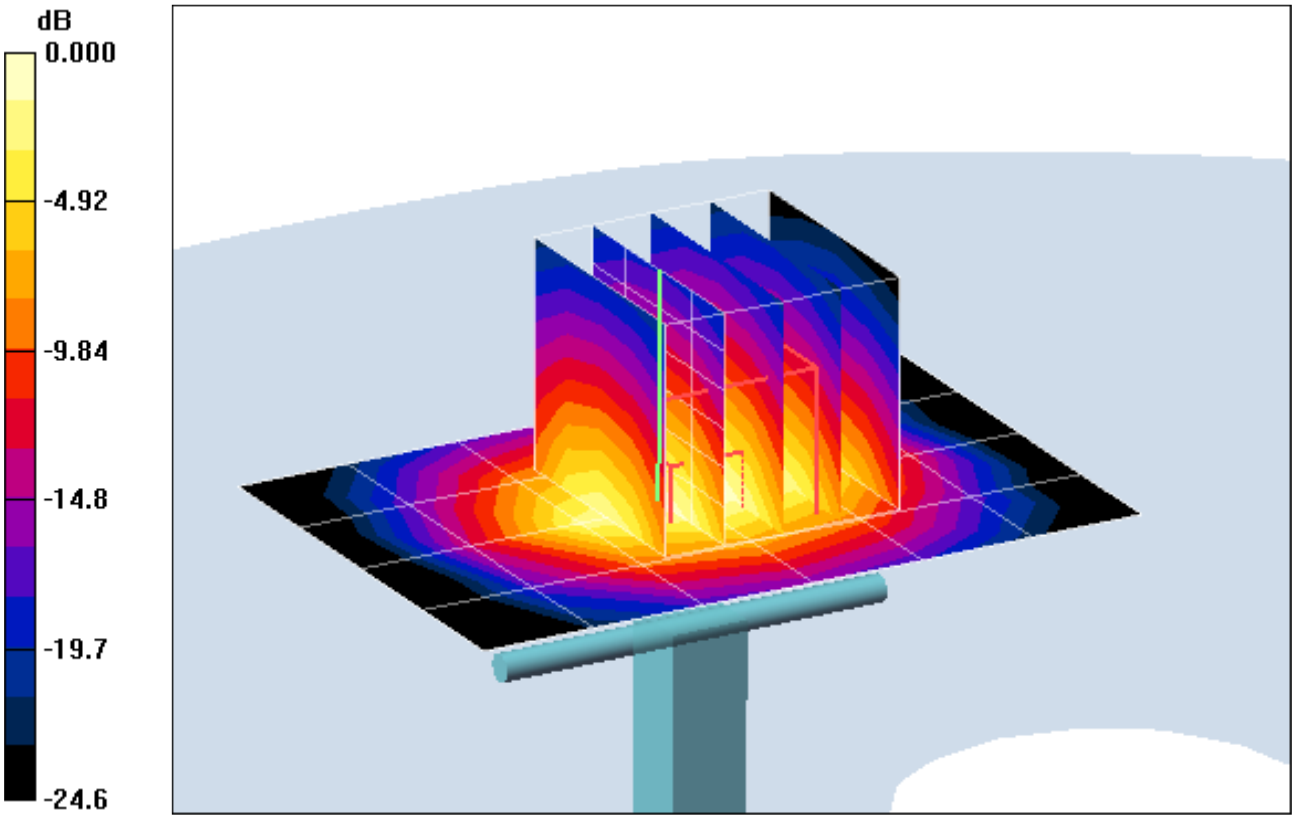

0 dB = 1.76mW/g

PCTEST ENGINEERING LABORATORY, INC.

DUT: SAR Dipole 2450 MHz; Type: D2450V2; Serial: 797

Communication System: CW; Frequency: 2450 MHz;Duty Cycle: 1:1
Medium: 2450 Body Medium parameters used:
f = 2450 MHz; σ = 1.87 mho/m; ε_r = 52.3; ρ = 1000 kg/m^3
Phantom section: Flat Section; Space: 1.0 cm

Test Date: 08-10-2011; Ambient Temp: 24.5°C; Tissue Temp: 23.1°C

Probe: ES3DV3 - SN3209; ConvF(4.15, 4.15, 4.15); Calibrated: 4/18/2011
Sensor-Surface: 3mm (Mechanical Surface Detection)
Electronics: DAE4 Sn704; Calibrated: 3/17/2011
Phantom: SAM with CRP; Type: SAM; Serial: TP1375
Measurement SW: DASY4, V4.7 Build 80; Postprocessing SW: SEMCAD, V1.8 Build 186

2450MHz System Verification

Area Scan (5x7x1): Measurement grid: dx=15mm, dy=15mm
Zoom Scan (5x5x7)/Cube 0: Measurement grid: dx=8mm, dy=8mm, dz=5mm
Input Power = 12 dBm (15.8 mW)
SAR(1 g) = 0.865 mW/g; SAR(10 g) = 0.398 mW/g
Deviation = 4.68%

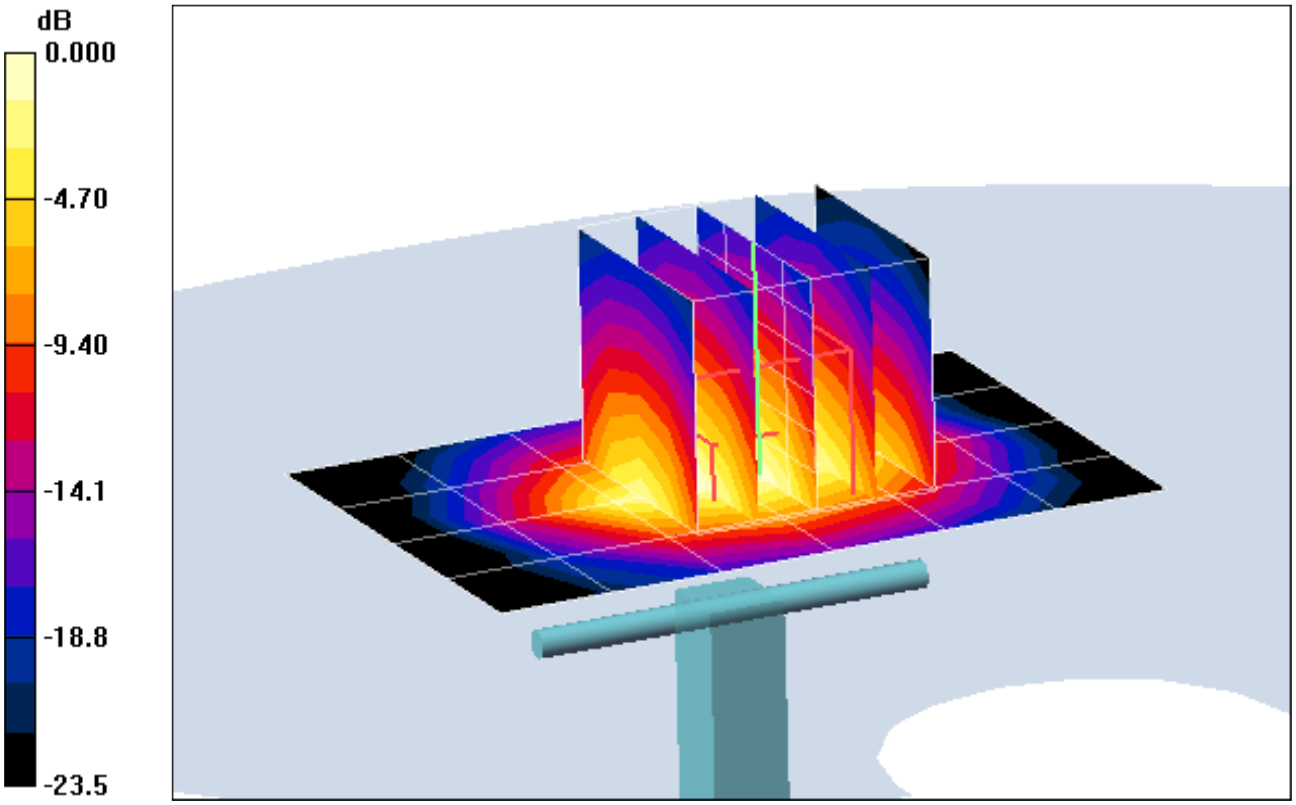

0 dB = 1.11mW/g

PCTEST ENGINEERING LABORATORY, INC.

DUT: Dipole 5200 MHz; Type: D5GHzV2; Serial: 1057

Communication System: CW; Frequency: 5200 MHz;Duty Cycle: 1:1
Medium: 5 GHz Head; Medium parameters used (interpolated):
f = 5200 MHz; σ = 4.61 mho/m; ε_r = 35; ρ = 1000 kg/m^3
Phantom section: Flat Section; Space: 1.0 cm

Test Date: 08-09-2011; Ambient Temp: 23.3 °C; Tissue Temp: 21.8 °C

Probe: EX3DV4 - SN3550; ConvF(4.06, 4.06, 4.06); Calibrated: 2/14/2011
Sensor-Surface: 2mm (Mechanical Surface Detection)
Electronics: DAE4 Sn665; Calibrated: 4/20/2011
Phantom: SAM Main; Type: SAM 4.0; Serial: TP-1114
Measurement SW: DASY4, V4.7 Build 80; Postprocessing SW: SEMCAD, V1.8 Build 186

5200MHz System Verification

Area Scan (7x9x1): Measurement grid: dx=10mm, dy=10mm
Zoom Scan (7x7x11)/Cube 0: Measurement grid: dx=4mm, dy=4mm, dz=2mm
Input Power = 20.0 dBm (100 mW)
SAR(1 g) = 8.08 mW/g; SAR(10 g) = 2.29 mW/g
Deviation = -2.77 %

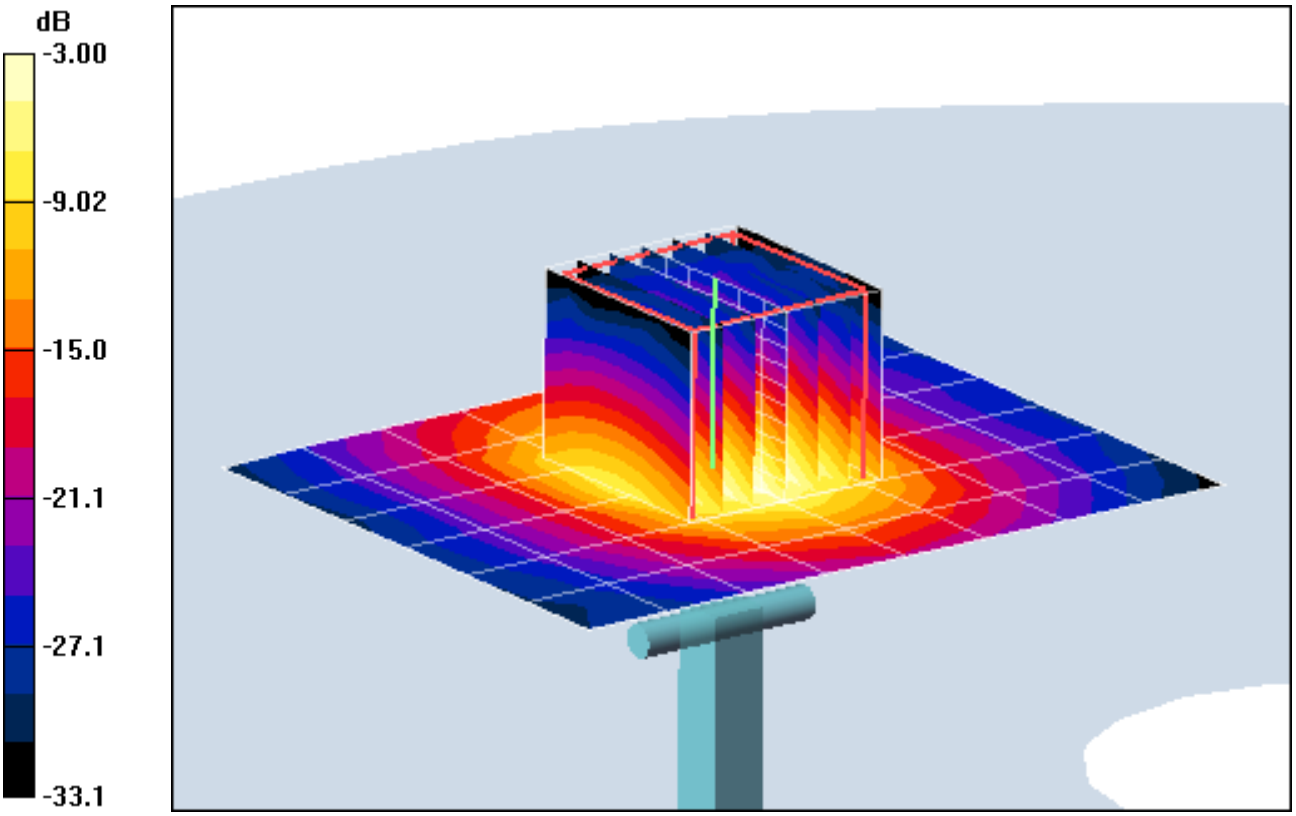

0 dB = 16.6mW/g

PCTEST ENGINEERING LABORATORY, INC.

DUT: Dipole 5200 MHz; Type: D5GHzV2; Serial: 1057

Communication System: CW; Frequency: 5200 MHz;Duty Cycle: 1:1
Medium: 5 GHz Body; Medium parameters used (interpolated):
f = 5200 MHz; σ = 5.13 mho/m; ε_r = 47.5; ρ = 1000 kg/m^3
Phantom section: Flat Section; Space: 1.0 cm

Test Date: 08-10-2011; Ambient Temp: 23.3 °C; Tissue Temp: 21.5°C

Probe: EX3DV4 - SN3550; ConvF(3.58, 3.58, 3.58); Calibrated: 2/14/2011
Sensor-Surface: 2mm (Mechanical Surface Detection)
Electronics: DAE4 Sn665; Calibrated: 4/20/2011
Phantom: SAM Sub; Type: SAM 4.0; Serial: TP-1357
Measurement SW: DASY4, V4.7 Build 80; Postprocessing SW: SEMCAD, V1.8 Build 186

5200MHz System Verification

Area Scan (7x9x1): Measurement grid: dx=10mm, dy=10mm
Zoom Scan (7x7x11)/Cube 0: Measurement grid: dx=4mm, dy=4mm, dz=2mm
Input Power = 20.0 dBm (100 mW)
SAR(1 g) = 8.3 mW/g; SAR(10 g) = 2.31 mW/g
Deviation = 6.82 %

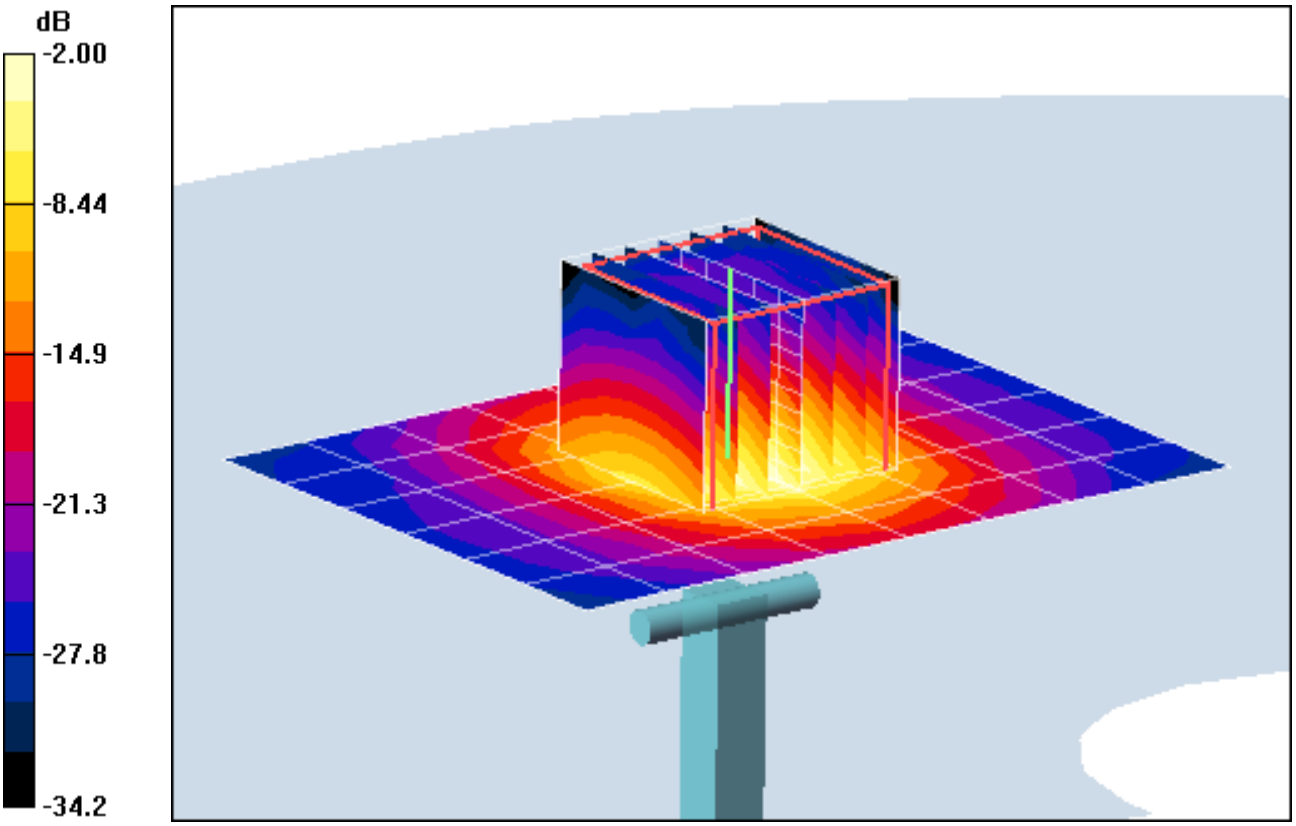

0 dB = 16.8mW/g

PCTEST ENGINEERING LABORATORY, INC.

DUT: Dipole 5500 MHz; Type: D5GHzV2; Serial: 1057

Communication System: CW; Frequency: 5500 MHz;Duty Cycle: 1:1
Medium: 5 GHz Head; Medium parameters used (interpolated):
f = 5500 MHz; σ = 4.94 mho/m; ε_r = 34.5; ρ = 1000 kg/m^3
Phantom section: Flat Section; Space: 1.0 cm

Test Date: 08-09-2011; Ambient Temp: 23.2 °C; Tissue Temp: 21.4 °C

Probe: EX3DV4 - SN3550; ConvF(3.77, 3.77, 3.77); Calibrated: 2/14/2011
Sensor-Surface: 2mm (Mechanical Surface Detection)
Electronics: DAE4 Sn665; Calibrated: 4/20/2011
Phantom: SAM Main; Type: SAM 4.0; Serial: TP-1114
Measurement SW: DASY4, V4.7 Build 80; Postprocessing SW: SEMCAD, V1.8 Build 186

5500MHz System Verification

Area Scan (7x9x1): Measurement grid: dx=10mm, dy=10mm
Zoom Scan (7x7x11)/Cube 0: Measurement grid: dx=4mm, dy=4mm, dz=2mm
Input Power = 20.0 dBm (100 mW)
SAR(1 g) = 8.37 mW/g; SAR(10 g) = 2.33 mW/g
Deviation = -7.10 %

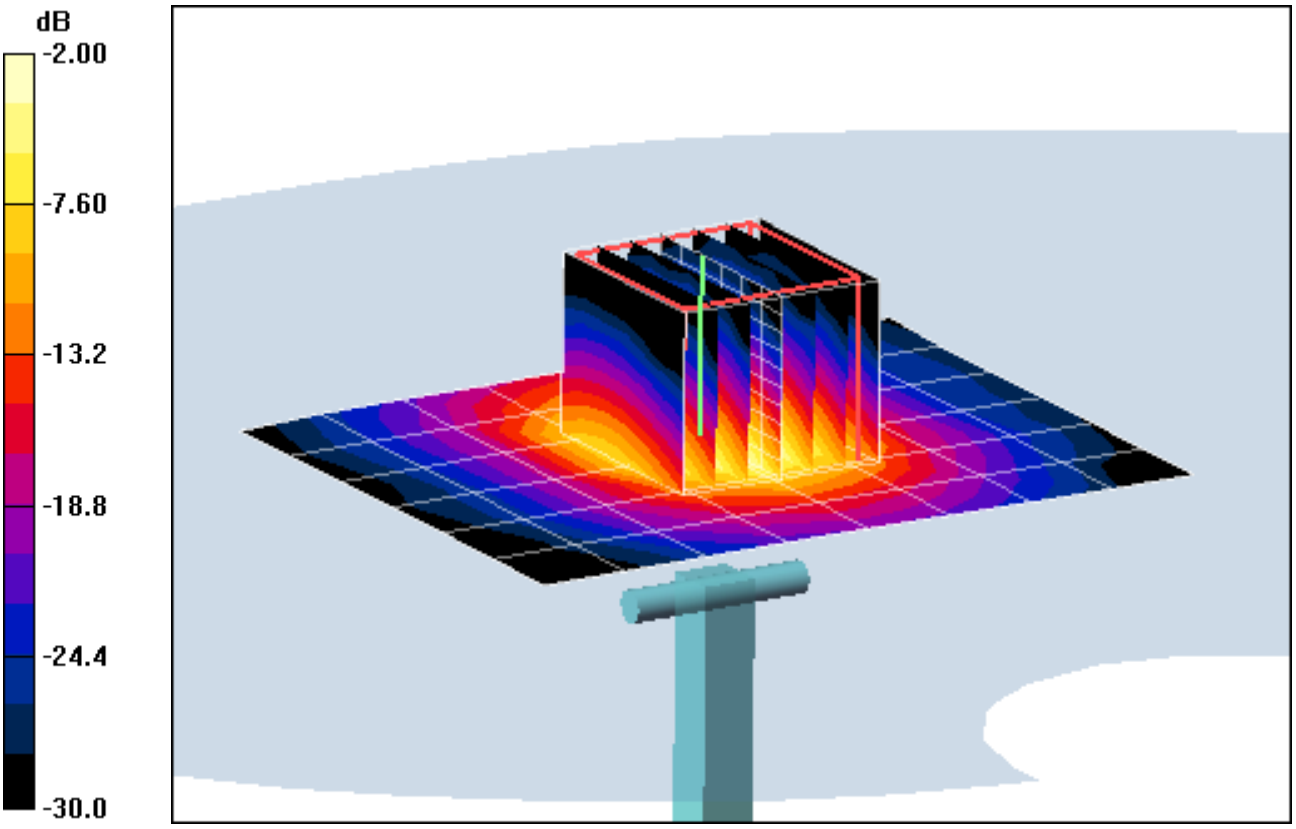

0 dB = 16.9mW/g

PCTEST ENGINEERING LABORATORY, INC.

DUT: Dipole 5500 MHz; Type: D5GHzV2; Serial: 1057

Communication System: CW; Frequency: 5500 MHz;Duty Cycle: 1:1
Medium: 5 GHz Body; Medium parameters used (interpolated):
f = 5500 MHz; σ = 5.52 mho/m; ε_r = 47; ρ = 1000 kg/m^3
Phantom section: Flat Section ; Space: 1.0 cm

Test Date: 08-10-2011; Ambient Temp: 23.5 °C; Tissue Temp: 21.7 °C

Probe: EX3DV4 - SN3550; ConvF(3.21, 3.21, 3.21); Calibrated: 2/14/2011
Sensor-Surface: 2mm (Mechanical Surface Detection)
Electronics: DAE4 Sn665; Calibrated: 4/20/2011
Phantom: SAM Sub; Type: SAM 4.0; Serial: TP-1357
Measurement SW: DASY4, V4.7 Build 80; Postprocessing SW: SEMCAD, V1.8 Build 186

5500MHz System Verification

Area Scan (7x9x1): Measurement grid: dx=10mm, dy=10mm
Zoom Scan (7x7x11)/Cube 0: Measurement grid: dx=4mm, dy=4mm, dz=2mm
Input Power = 20.0 dBm (100 mW)
SAR(1 g) = 8.62 mW/g; SAR(10 g) = 2.27 mW/g
Deviation = 2.13 %

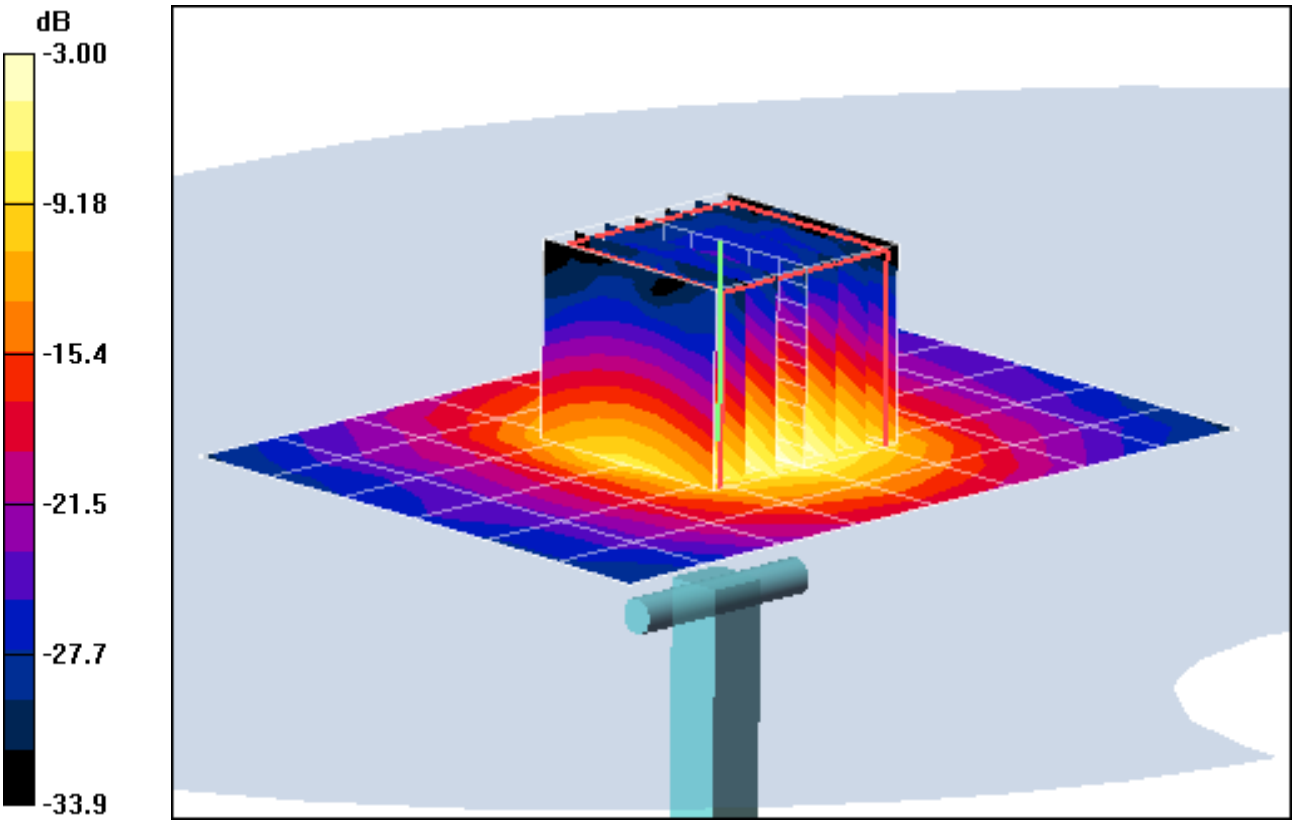

0 dB = 17.4mW/g

PCTEST ENGINEERING LABORATORY, INC.

DUT: Dipole 5800 MHz; Type: D5GHzV2; Serial: 1057

Communication System: CW; Frequency: 5800 MHz;Duty Cycle: 1:1
Medium: 5 GHz Head; Medium parameters used (interpolated):
f = 5800 MHz; σ = 5.32 mho/m; ε_r = 33.9; ρ = 1000 kg/m^3
Phantom section: Flat Section; Space: 1.0 cm

Test Date: 08-09-2011; Ambient Temp: 23.5 °C; Tissue Temp: 21.6 °C

Probe: EX3DV4 - SN3550; ConvF(3.64, 3.64, 3.64); Calibrated: 2/14/2011
Sensor-Surface: 2mm (Mechanical Surface Detection)
Electronics: DAE4 Sn665; Calibrated: 4/20/2011
Phantom: SAM Main; Type: SAM 4.0; Serial: TP-1114
Measurement SW: DASY4, V4.7 Build 80; Postprocessing SW: SEMCAD, V1.8 Build 186

5800MHz System Verification

Area Scan (7x9x1): Measurement grid: dx=10mm, dy=10mm
Zoom Scan (7x7x11)/Cube 0: Measurement grid: dx=4mm, dy=4mm, dz=2mm
Input Power = 20.0 dBm (100 mW)
SAR(1 g) = 8.47 mW/g; SAR(10 g) = 2.36 mW/g
Deviation = 2.17 %

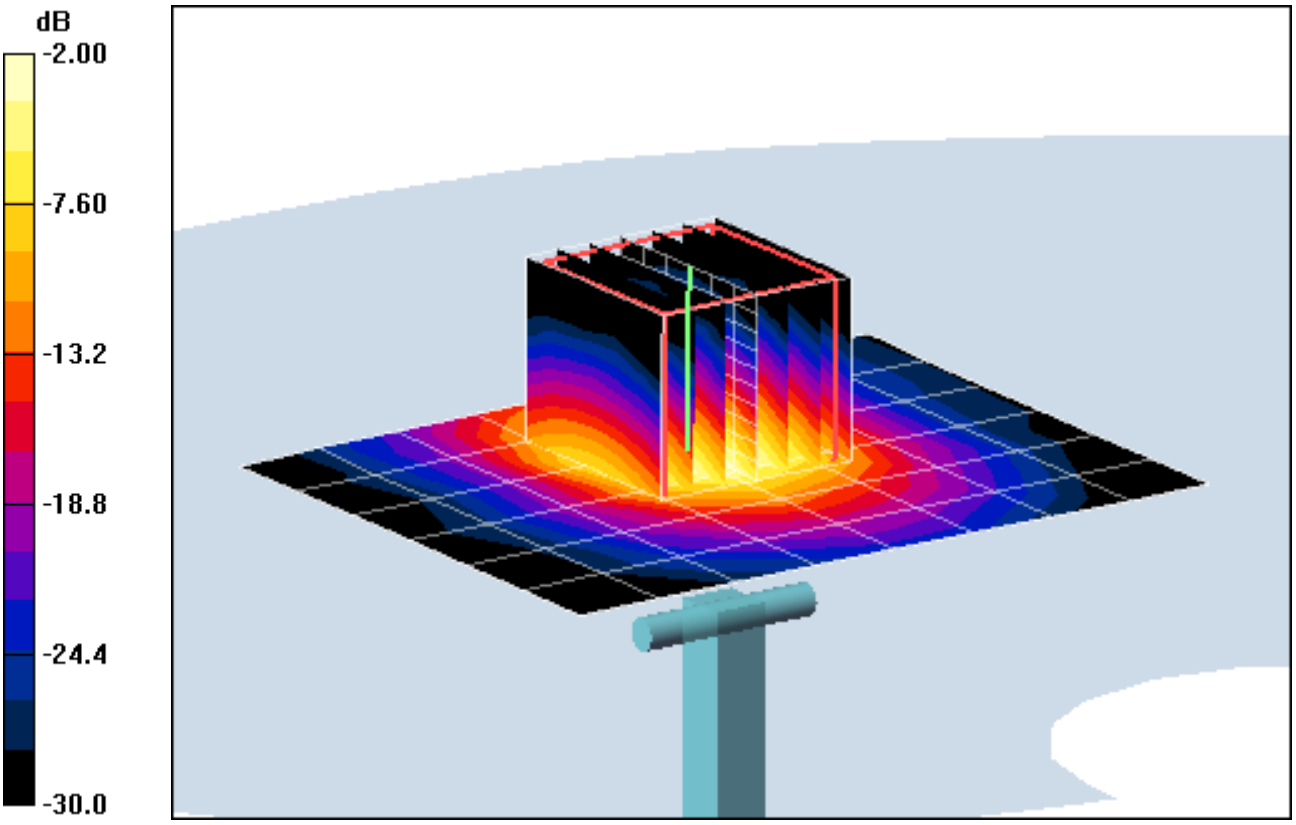

0 dB = 18.0mW/g

PCTEST ENGINEERING LABORATORY, INC.

DUT: Dipole 5800 MHz; Type: D5GHzV2; Serial: 1057

Communication System: CW; Frequency: 5800 MHz;Duty Cycle: 1:1
Medium: 5 GHz Body; Medium parameters used (interpolated):
f = 5800 MHz; σ = 5.95 mho/m; ε_r = 46.4; ρ = 1000 kg/m^3
Phantom section: Flat Section; Space: 1.0 cm

Test Date: 08-10-2011; Ambient Temp: 23.7 °C; Tissue Temp: 21.8 °C

Probe: EX3DV4 - SN3550; ConvF(3.29, 3.29, 3.29); Calibrated: 2/14/2011
Sensor-Surface: 2mm (Mechanical Surface Detection)
Electronics: DAE4 Sn665; Calibrated: 4/20/2011
Phantom: SAM Sub; Type: SAM 4.0; Serial: TP-1357
Measurement SW: DASY4, V4.7 Build 80; Postprocessing SW: SEMCAD, V1.8 Build 186

5800MHz System Verification

Area Scan (7x9x1): Measurement grid: dx=10mm, dy=10mm
Zoom Scan (7x7x11)/Cube 0: Measurement grid: dx=4mm, dy=4mm, dz=2mm
Input Power = 20.0 dBm (100 mW)
SAR(1 g) = 7.79 mW/g; SAR(10 g) = 2.13 mW/g
Deviation = 3.87 %

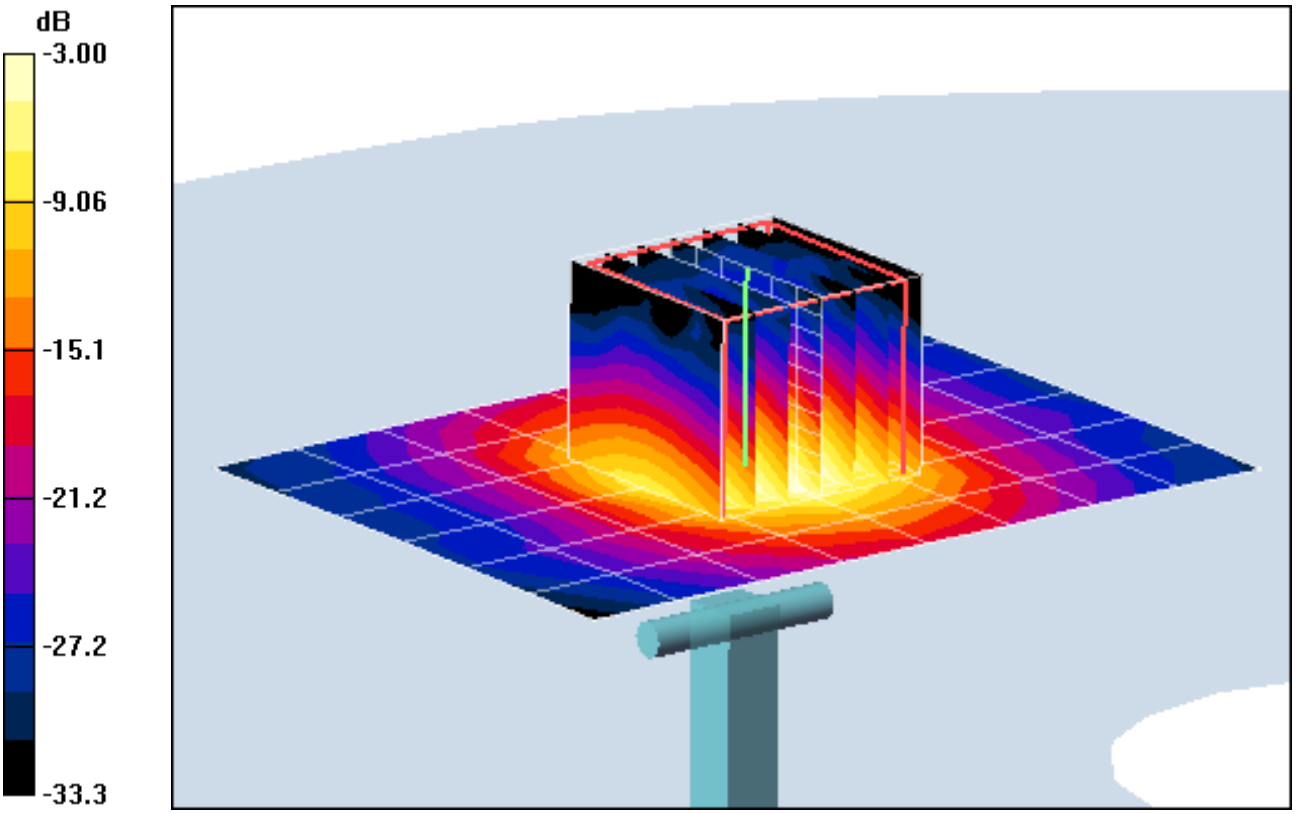

0 dB = 16.6mW/g