Samsung mobile phones have been rated number one in brand loyalty by consumers two years in a row according to Brand Keys, a leading independent authority on brand loyalty.

Samsung Telecommunications America
1130 East Arapaho Road
Richardson, Texas 75081
1-800-SAMSUNG
www.samsungusa.com/wireless

© 2003 Samsung Telecommunications America. Samsung is a registered trademark of Samsung Electronics America, Inc. and its related entities. Specifications subject to change without notice.

SAMSUNG

SGH p705

User Guide

DAUL BAND GPRS Series
SGH-p705
Portable Digital Telephone
User Manual

Please read this manual before operating your phone, and keep it for future reference.

Printed in Korea
Code No.: GH68-xxxxxA
wb_p705_101403_d2

Intellectual Property

All Intellectual Property, as defined below, owned by or which is otherwise the property of Samsung or its respective suppliers relating to the SAMSUNG Phone, including but not limited to, accessories, parts, or software relating thereto (the “Phone System”), is proprietary to Samsung and protected under federal laws, state laws, and international treaty provisions. Intellectual Property includes, but is not limited to, inventions (patentable or unpatentable), patents, trade secrets, copyrights, software, computer programs, and related documentation and other works of authorship. You may not infringe or otherwise violate the rights secured by the Intellectual Property. Moreover, you agree that you will not (and will not attempt to) modify, prepare derivative works of, reverse engineer, decompile, disassemble, or otherwise attempt to create source code from the software. No title to or ownership in the Intellectual Property is transferred to you. All applicable rights of the Intellectual Property shall remain with SAMSUNG and its suppliers.

Samsung Telecommunications America (STA), Inc.

Headquarters:

1301 E. Lookout Drive
Richardson, TX 75082
Tel: 972-761-7000
Fax: 972-761-7001

Customer Care Center:

1601 E. Plano Parkway
Suite 150
Plano, TX 75047
Tel: 888-987-HELP (4357)
Fax: 972-761-7501

Internet Address: http://www.samsungusa.com/wireless

©2003 Samsung Telecommunications America. All rights reserved. No reproduction in whole or in part allowed without prior written approval. Samsung is a registered trademark of Samsung Electronics America, Inc. and its related entities.

Table of Contents

Important Safety Precautions..... 7

Unpacking 9

Your Phone..... 10
Phone Layout 10
Display 13
Service Light 16

Getting Started 18
Installing the SIM Card 18
Charging the Battery 20
Turning the Phone On or Off 22

Call Functions 25
Making a Call..... 25
Adjusting the Volume 27
Answering a Call 27
Viewing Missed Calls..... 28
Quickly Switching to Silent Mode 30

Selecting Functions and Options..... 31

Phonebook..... 33
Storing a Number with a Name 33
Using Phonebook Entry Options..... 35
Searching for and Dialing a Number in Phonebook 37
Editing a Caller Group..... 38
Speed-dialing 39
Deleting All of the Phonebook Entries..... 40
Checking the Memory Status 41

Entering Text..... 42

Changing the Text Input Mode 42
Using T9 Mode 43
Using Alphabet Mode 45
Using Number Mode 46
Using Symbol Mode 47

Options During a Call 49
Putting a Call on Hold 49
Using the Menu Functions 50
Switching the Microphone Off (Mute) 50
Muting or Sending Key Tones 51
Sending a Sequence of DTMF Tones 51
Searching for a Number in Phonebook 52
Call Waiting 52
Making a Multi-party Call 53

Using the Menus 55
Accessing a Menu Function by Scrolling 55
Using Shortcuts 56
List of Menu Functions 56

Text Messages 62
Inbox *(Menu 1.1)* 62
Outbox *(Menu 1.2)* 63
Write New *(Menu 1.3)* 64
Templates *(Menu 1.4)* 66
Settings *(Menu 1.5)* 67
Delete All *(Menu 1.6)* 68
Memory Status *(Menu 1.7)* 69
Voice Mail *(Menu 1.8)* 69
Broadcast *(Menu 1.9)* 69

Picture Messages 71
Inbox *(Menu 2.1)* 71
Outbox *(Menu 2.2)* 74
Draft *(Menu 2.3)* 75
Write New *(Menu 2.4)* 75
Templates *(Menu 2.5)* 79

Delete All *(Menu 2.6)* 80
Memory Status *(Menu 2.7)*..... 81

Call Records..... 82
Missed Calls *(Menu 3.1)*..... 82
Incoming Calls *(Menu 3.2)* 82
Outgoing Calls *(Menu 3.3)* 83
Delete All *(Menu 3.4)* 83
Call Time *(Menu 3.5)*..... 84

Television 85
TV *(Menu 4.1)* 85
TV Image *(Menu 4.2)* 88
Memory Status *(Menu 4.3)*..... 88

Sound Settings 89
Ring Tone *(Menu 5.1)*..... 89
Ring Volume *(Menu 5.2)* 89
Alert Type *(Menu 5.3)* 89
Keypad Tone *(Menu 5.4)*..... 90
Message Tone *(Menu 5.5)* 90
Folder Tone *(Menu 5.6)* 91
Power On/Off *(Menu 5.7)* 91
Extra Tones *(Menu 5.8)* 91

Phone Settings 93
Display Settings *(Menu 6.1)* 93
Greeting Message *(Menu 6.2)*..... 95
Own Number *(Menu 6.3)* 95
Language *(Menu 6.4)* 96
Security *(Menu 6.5)* 96
Extra Settings *(Menu 6.6)* 96
Short Cut *(Menu 6.7)* 97
Infrared Activate *(Menu 6.8)* 97
Reset Settings *(Menu 6.9)*..... 98

Organizer..... 99
Alarm *(Menu 7.1)* 99

Calendar *(Menu 7.2)* 100
Time & Date *(Menu 7.3)* 103
Calculator *(Menu 7.4)*..... 104
To Do List *(Menu 7.5)*..... 104
Voice Memo *(Menu 7.6)*..... 107
Currency Exchange *(Menu 7.7)*..... 109

Network Services..... 111
Call Forwarding *(Menu 8.1)* 111
Call Waiting *(Menu 8.2)* 112
Network Selection *(Menu 8.3)* 113
Caller ID *(Menu 8.4)* 114

Funbox 115
t-Zones *(Menu 9.1)*..... 115
Games *(Menu 9.2)*..... 120
Sounds *(Menu 9.3)* 122
Images *(Menu 9.4)* 123
Delete All *(Menu 9.5)* 123
Memory Status *(Menu 9.6)*..... 124

Solving Problems..... 125

Health and Safety Information 128
Usage guidelines:
All about performance and safety 128
Maintaining Safe Use of and Access to Your Phone.... 130
Caring for the Battery..... 133
Acknowledging Special Precautions and FCC 134
FDA Consumer Update..... 135
CTIA Safety Information 143
Owner's Record 148

User Guide Proprietary Notice 148

STANDARD LIMITED WARRANTY 149

Glossary 154

Index..... 161

Important Safety Precautions

Read these guidelines before using your wireless phone. Failure to comply with them may be dangerous or illegal.

Road Safety at All Times

Do not use a hand-held phone while driving; park the vehicle first.

When Refuelling

Do not use the phone at a service station or near fuels or chemicals.

In an Aircraft

Wireless phones can cause interference. Using them in an aircraft is both illegal and dangerous.

In Hospitals

Switch your phone off near medical equipment. Follow any regulations or rules in force.

Interference

All wireless phones may be subject to interference, which could affect its performance.

Special Regulations

Meet any special regulations in force in any area and always turn off your phone whenever it is forbidden to use it, or when it may cause interference or danger.

Sensible Use

Use only in the normal position (held to the ear). Avoid unnecessary contact with the antenna when the phone is turned on.

Emergency Call

Ensure the phone is switched on and in service. Enter the emergency number for your present location, then press the key. You must deactivate any unnecessary features before you can make an emergency call. Give all the necessary information as accurately as possible. Do not end the call until given permission to do so.

Water Resistance

Your phone is not water-resistant. Keep it dry.

Accessories and Batteries

Use only Samsung-approved accessories and batteries. Use of any unauthorized accessories could damage your phone and may be dangerous.

Qualified Service

Only qualified service personnel may repair your phone.

For more detailed safety information, see “Health and Safety Information” on page 128.

Unpacking

Your package contains the following items:

Handset

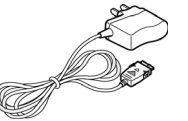

Travel Adapter

Batteries

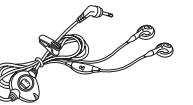

Stereo
Ear-microphone

User's Manual

Hand Strap

Conversion Plug

You can obtain the following accessories for your phone from your local Samsung dealer:

- Standard batteries
- Simple hands-free kit
- Ear-microphone
- Car holder

- Cigarette lighter adapter
- Travel charger/adapter
- Battery case
- Leather case
- Battery charger
- Extended batteries

Your Phone

Phone Layout

The following illustrations show the main elements of your phone:

Key(s)	**Description**
	In Menu mode, scroll through the menu options and Phonebook. In Idle mode, allows access to your favorite menu options directly. For further details about shortcuts, see page 97.
	In Menu mode, the Left key returns to the previous menu level and the Right key selects the current menu. When entering text, move the cursor to the left and right respectively. In Idle mode, the Left key enters the **Write New** menu and the Right key enters the **Voice Memo** menu.
 (soft keys)	The soft keys perform the functions indicated by the text above them, on the bottom line of the display.
	In Idle mode, launches the WAP (Wireless Application Protocol) browser.

Key(s)	**Description** (Continued)
	Makes or answers a call. In Idle mode, recalls the last number you dialed or received when held down. In Menu mode, selects a menu function or stores information that you have entered, such as a name in the phone or SIM memory.
C	Deletes characters from the display. In Menu mode, returns to the previous menu level.
	Ends a call. Also turns the phone on and off when held down. In Menu mode, cancels your input and returns to Idle mode.
	Enters the **Television** menu. Also turns the TV on when held down.
1	In Idle mode, quickly accesses your voice mail when held down.
0 + ~ 9 WXYZ	Enter numbers, letters and some special characters.
#	Enters special characters. Performs various functions.

Key(s)	**Description** (Continued)
	(on the left side of the phone) During a call, adjusts the earpiece volume. In Idle mode with folder open, adjusts the keypad tone volume. With the folder closed, turns on the backlight when held down. In Menu mode, scrolls through the menu options and Phonebook.

Display

Display Layout

The display has three areas:

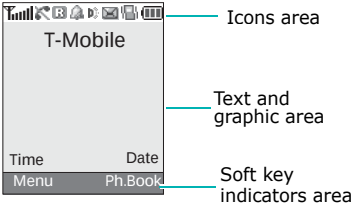

Area	**Description**
First line	Displays various icons. See page 16.
Middle lines	Display messages, instructions and any information that you enter, such as the number you are dialing.

Area	Description
Last line	Shows the current functions assigned to the two soft keys.

Icons

Icon	Description
	Shows the received signal strength. The greater the number of bars, the stronger the signal.
	Appears when a call is in progress.
	Appears when you are out of your service area. When it displays, you cannot make or receive a call.
	Appears when you are out of your home area and have logged onto a different network; for example, when travelling in other countries.
	Appears when a new text message has been received.
	Appears when a new voice mail message has been received.
	Appears when a new multimedia message has been received.
	Appears when you set an alarm to ring at a specified time.
	Appears when Silent mode is active or when you set the **Alert Type** menu (**Menu 5.3**) so that the phone vibrates when you receive a call. For further details, see page 31 and page 89 respectively.
	Appears when the IrDA port is active. For details, see page 97.
	Appears when Mute mode is active.

Icon	Description (Continued)
	Shows the level of your battery. The more bars you see, the more power you have remaining.

Backlight

The backlight illuminates the display and the keypad. When you press any key or open the folder, the backlight turns on and remains on for a given period of time, depending on your setting in the **Back Light** menu. When no keys are pressed, the display turns off after one minute to conserve your battery power.

To specify the length of time the backlight is active, set the **Back Light** menu (**Menu 6.1.5**). See page 94 for further details.

External Display

Your phone has an external display on the folder. It displays an incoming call or a message. It also alerts you at the specified time when you have set an alarm by turning on its backlight and showing the corresponding icon on it.

The external display shows the current time and date on the digital clock. You can change the display time and image in the **Front LCD** menu (**Menu 6.1.8**). See page 94 for further details.

Service Light

The service light is below the display. It flashes when services are available on the phone.

To activate or deactivate the service light, set the **Service Light** menu (**Menu 6.1.6**). See page 94 for further details.

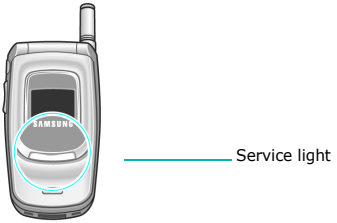

Getting Started

Installing the SIM Card

When you subscribe to a cellular network, provided is a plug-in SIM card loaded with your subscription details, such as your PIN, and any optional services available.

Important! The plug-in SIM card and its contacts can be easily damaged by scratches or bending, so be careful when inserting or removing the card.

Keep all SIM cards out of the reach of small children.

To install the SIM card, use the following steps:

1. If necessary, turn off the phone by holding down the key until the power-off image displays.
2. Remove the battery. To do so:

   ① Press the battery lock and hold it in that position.

   ② Slide the battery and lift it away, as shown.

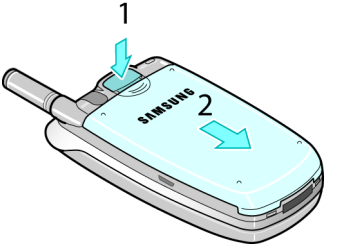

3. Slide the SIM card into the SIM card socket so that it locks the card into position.

Make sure the gold contacts of the card face into the phone.

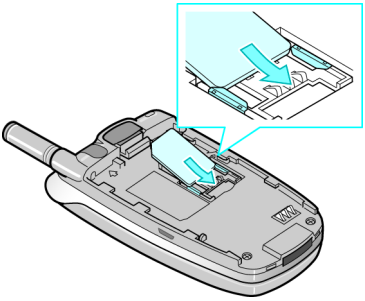

Note: When you need to remove the SIM card, slide it upwards, as shown, and take it out of the socket.

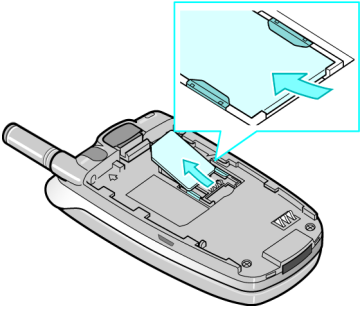

4. Replace the battery, taking care to match the tabs on the battery with the grooves on the phone.

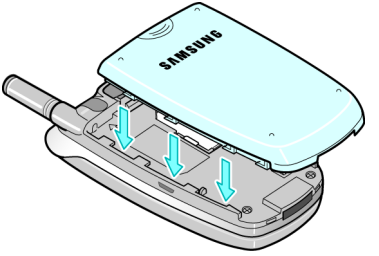

5. Slide the battery towards the top of the phone until it clicks into place. Make sure that the battery is properly installed before switching the power on.

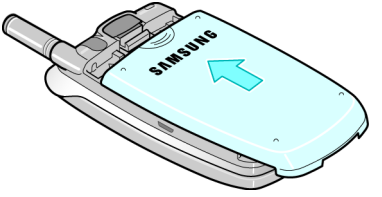

Charging the Battery

Your phone is powered by a rechargeable Li-ion battery. A travel adapter comes with your phone for charging the battery. Use only approved batteries and chargers. Ask your local Samsung dealer for further details.

The travel adapter allows you to use the phone while the battery is charging, but this causes the phone to charge slower.

Note: You MUST fully charge the battery before using your phone for the first time. A discharged battery is fully recharged in approximately 200 minutes.

1. With the battery in position on the phone, plug the connector of the travel adapter into the jack at the bottom of the phone.

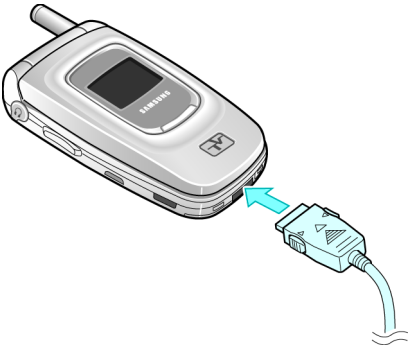

2. Plug the adapter into a standard AC wall outlet.
3. When charging is finished, unplug the adapter from the power outlet and disconnect it from the phone by pressing

the gray tabs on both sides of the connector and pulling the connector out.

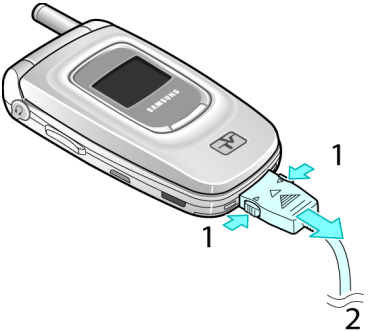

Note: You must unplug the adapter before removing the battery from the phone during charging; otherwise, the phone could be damaged.

Low Battery Indicator

When the battery is weak and only a few minutes of talk time remain, a warning tone sounds and a message repeats at regular intervals on the display. When this happens, your phone turns off the backlight to conserve the remaining battery power.

When the battery level becomes too low, the phone automatically turns off.

Turning the Phone On or Off

1. Open the folder.
2. Press and hold the key until the phone turns on.
3. If the phone asks you to enter a password, enter the password and press the **OK** soft key. The phone password is

preset to “00000000” at the factory. If the phone asks for a PIN, enter the PIN and press the **OK** soft key.

The phone searches for your network and, after finding it, the idle screen appears on the display. Now, you can make or receive a call.

4. When you wish to switch the phone off, press and hold the key until the power-off image displays.

Call Functions

Making a Call

When the idle screen displays, enter the area code and phone number, and then press the key.

Note: When you activate the **Auto Redial** option in the **Extra Settings** menu (**Menu 6.6**), the phone automatically redials up to ten times when the person does not answer the call or is already on the phone. See page 96 for further details.

Making an International Call

1. From the Idle screen press and hold the **0** key until the **+** character appears.
2. Enter the country code, area code and phone number and press the key.

Correcting the Number

To clear	Press the
the last digit displayed	**C** key.
any other digit in the number	Left or Right key until the cursor is immediately to the right of the digit to be cleared. Press the **C** key. You can also insert a missing digit simply by pressing the appropriate key.
the whole display	**C** key and hold it for more than one second.

Ending a Call

When you want to end your call, briefly press the key.

Redialing the Last Number

The phone stores the numbers you have dialed, received or missed if the caller is identified. See “Call Records” on page 82 for further details.

To recall any of these numbers:

1. If you have typed characters on the display, press the key to return to Idle mode.
2. Press the key to display a list of the last numbers in the order you made or received them.
3. Use the Up and Down keys to scroll through the numbers until the number you want highlights.
4.

To	Press the
place the call	key.
edit the number	**Options** soft key and select **Edit**.
delete the number	**Options** soft key and select **Delete**.
delete all of the numbers on the Call Log list	**Options** soft key and select **Delete All**. When a confirming message displays, press the **Yes** soft key.

Making a Call from Phonebook

You can store the phone numbers that you use regularly in the SIM card or the phone’s memory, which are collectively called Phonebook. Simply select a name to recall the associated number. For further details about the Phonebook features, see page 34.

Adjusting the Volume

During a call, if you want to adjust the earpiece volume, use the Volume keys on the left side of the phone.

Press the ▲ key to increase the volume and the ▼ key to decrease the volume.

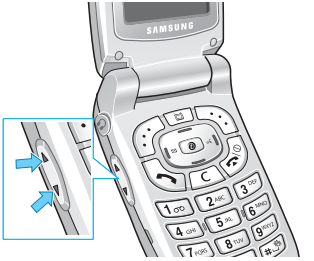

In Idle mode with the folder open, you can also adjust the keypad tone volume using these keys.

Answering a Call

When somebody calls you, the phone rings and displays the incoming call image.

When the caller can be identified, the caller's phone number or name, if stored in your Phonebook, displays.

1. If necessary, open the folder. Press the key or the **Accept** soft key to answer the incoming call.

   When the **Anykey Answer** option in the **Extra Settings** menu (**Menu 6.6**) is activated, you can press any key to answer a call except for the key and the **Reject** soft key. See page 96.

When the **Active Folder** option in the **Extra Settings** menu (**Menu 6.6**) is activated, you can answer the call simply by opening the folder. See page 96.

Note: To reject the call, press and hold one of the Volume keys, or press the **Reject** soft key or key.

2. End the call by closing the folder or pressing the key.

Note: You can answer a call while using Phonebook or menu features. After ending the call, the phone returns to the function screen you were using.

Viewing Missed Calls

If you are unable to answer a call, you can find out who is calling you so that you can call the person back.

The number of calls you missed displays on the idle screen immediately after a call is missed.

To view the missed call immediately:

1. If the phone is closed, open the folder.
2. Press the **View** soft key.

   The number for the most recent missed call displays, if available.

3.

To	Press the
scroll through the missed calls	Up or Down key.
call the number displayed	key.
edit or delete a missed call number	**Select** soft key. See below.

Editing a Missed Call Number

Note: When the number for the missed call is not available, the **Edit** option does not display.

1. Press the **Options** soft key.
2. Press the Up or Down key to highlight the **Edit** option.
3. Press the **Select** soft key.
4. Change the number.
5.

To	Press the
call the number	key.
store the number	**Save** soft key and enter the name and location. For further details, see page 34.

Deleting a Missed Call

1. Press the **Options** soft key.
2. If necessary, press the Up or Down key to highlight the **Delete** option.
3. Press the **Select** soft key.

You can press the key at any time to exit the Missed Call feature.

Note: You can access the Missed Call feature at any time by selecting the **Missed Calls** menu (**Menu 3.1**). For further details, see page 82.

Quickly Switching to Silent Mode

In Idle mode, press and hold the # key until the “Silent Mode” message and the Vibration icon ( ) display.

In Silent mode, your phone changes the sound settings as follows:

Option	**New Setting**
Alert Type (**Menu 5.3**)	Vibration
Keypad Tone (**Menu 5.4**)	Off
Message Tone (**Menu 5.5**)	Vibration
Folder Tone (**Menu 5.6**)	Off
Power On/Off Tone (**Menu 5.7**)	Off
Extra Tones (**Menu 5.8**)	Off

To exit and reactivate the previous sound settings, in Idle mode press and hold the # key again until “Exit Silent Mode” appears. The Vibration icon ( ) no longer displays.

Selecting Functions and Options

Your phone offers a set of functions that allows customization. These functions are arranged in menus and sub-menus, accessed using the two soft keys marked and . Each menu and sub-menu allows you to view and alter the settings of a particular function.

The roles of the soft keys vary according to the function you are currently using; the labels on the bottom line of the display just above each key indicates its current role.

Example:

Press the left soft key to access Menu Mode.

Press the right soft key to access the Phonebook features.

To view the various functions and options available and to select the one you want:

1. Press the appropriate soft key.

2.

To	Press the
select the: • function displayed • option highlighted	**Select** soft key or the Right key.
view the next function or highlight the next option on a list	Down key or the ▼ key on the left side of the phone.
move back to the previous function or option on a list	Up key or the ▲ key on the left side of the phone.
move back up one level in the structure	Left key, soft key or **C** key.
exit the structure without changing the settings	key.

In some functions, you may be asked for a password or PIN. Enter the code and press the **OK** soft key.

Note: When you access a list of options, your phone highlights the current option. If, however, there are only two options, such as **On**/**Off** or **Enable**/**Disable**, your phone highlights the option that is not currently active so that you can select it directly.

Phonebook

You can store phone numbers and their corresponding names in both your SIM card and your phone's memories. They are physically separate but are used as a single entity, called Phonebook.

Storing a Number with a Name

There are two ways to store a number:

- Using the **Save** soft key in Idle mode
- Using the **New Entry** option in the Phonebook menu

Storing a Number in Idle Mode

As soon as you start to enter a number, **Save** appears above the left soft key to allow you to store the number in Phonebook.

1. Enter the number you want to store.

   Note: If you make a mistake while entering a number, correct it using the **C** key. For further details, see page 26.

2. When you are sure that it is correct, press the **Save** soft key.

3. Select the category of the number to be stored. Three categories are available:

   • Mobile Number

   • Office Number

   • Home Number

   To select the category, press the Left or Right key and press the **Select** soft key.

4. Select a memory location, either **SIM** or **Phone**, by pressing the Up or Down key and press the **Select** soft key.

   Note: When you change phones, any numbers stored in your SIM card memory are automatically available with the new phone, whereas any numbers stored in the phone's memory must be reentered.

5. Enter a name and press the **OK** soft key.

   For the phone's memory, you can enter up to 20 characters. For the SIM memory, the maximum length you can enter for a name depends on your SIM card. For further details about how to enter characters, see page 43.

6. If you do not want to save the number and name in the suggested location, press the **C** key to clear the location number and enter another location by pressing the number keys.

7. Press the **OK** soft key to store the name and number.

   After storing, the phone displays the Phonebook entry or name you just created.

8.

To	Press the
use the entry options	**Options** soft key. For further details, see page 36.
return to the idle screen	key.

Storing a Number Using the Phonebook Menu

1. When the idle screen displays, press the **Ph.Book** soft key.

2. Scroll to **New Entry** by pressing the Up or Down key and press the **Select** soft key.

3. Select the category of the number to be stored by pressing the Left or Right key, and press the **Select** soft key.

   Note: E-mail Address is available in this step. It allows you to save an e-mail address instead of a phone number.

4. Select a memory location, either **SIM** or **Phone**, by pressing the Up or Down key and press the **Select** soft key.

   Note: When you are saving an e-mail address, **SIM** is not available.

5. Enter a name and press the **OK** soft key.

   For the phone's memory, you can enter up to 20 characters. For the SIM memory, the maximum length you can enter for a name depends on your SIM card. For further details about how to enter characters, see page 43.

6. Enter the number or e-mail address you want to store and press the **Save** soft key.

7. Continue the procedure from step 6 on page 35 to store the number.

Using Phonebook Entry Options

While accessing any Phonebook entry, press the **Options** soft key to access the options for the entry.

To	Press the
select the highlighted option	**Select** soft key or the Right key.
highlight a different option	Up or Down key until the option you want highlights.

The following options are available:

Paste: allows you to paste the number into the normal dialing mode. Use this option to dial a number similar to one in Phonebook, such as a different extension in the same office.

Use the **C** key to change the number as required; see page 26 for further details. When you are ready to dial, press the key.

Edit: allows you to edit the name and number.

Select **One Entry** to change the name and/or one number for the selected entry. If you change the name, the number is saved separately with the new name.

Select **All Entry** to change only the name of the entry.

Delete: allows you to delete the selected number from Phonebook. You are asked to confirm that you wish to delete the name and number by pressing the **Yes** soft key.

Copy: allows you to copy the number to another location. You can select the memory and the location number.

Caller Group: allows you to organize your Phonebook entries in caller groups so that the phone alerts you in a specific way when a person from one of your groups calls you. Select one of the ten groups available.

To remove an entry from a group, select the **No Group** option.

For further details about how to change caller group properties, see page 39.

Add Entry: allows you to add a new number to the currently selected name.

Searching for and Dialing a Number in Phonebook

After storing numbers in Phonebook, you can search for them in two ways; by name and by caller group.

Searching for a Number by Name

1. When the idle screen displays, press the **Ph.Book** soft key.
2. Press the **Select** soft key when **Search** highlights. You are asked to enter a name.
3. Enter the first few letters of the name that you want to find.

   The Phonebook entries are listed, starting with the first entry matching your input.

4.

To	Press the
view the highlighted entry	**View** soft key.
select a different entry	Up or Down key until the entry highlights.
look for a name starting with a different letter	key labeled with the letter you want.

5. Once you have found the entry, press the key to dial the number, or press the **Options** soft key to access the Phonebook entry options; for further details, see page 36.

Searching for a Number by Caller Group

1. When the idle screen displays, press the **Ph.Book** soft key.
2. Scroll to **Group Search** by pressing the Up or Down key and press the **Select** soft key. You are asked to enter a group name.

3. Enter the first few letters of the group name that you want to find.

   The caller groups are listed, starting with the first group matching your input.

4. If necessary, scroll to a group by pressing the Up or Down key and press the **View** soft key.

   The Phonebook entries in the caller group are listed.

5.

To	Press the
view the highlighted entry	**View** soft key.
select a different entry	Up or Down key until the entry you want highlights.

6. Once you have found the entry, press the key to dial the number, or press the **Options** soft key to access the Phonebook entry options; for further details, see page 36.

Editing a Caller Group

1. When the idle screen displays, press the **Ph.Book** soft key.
2. Scroll to **Group Edit** by pressing the Up or Down key and press the **Select** soft key.
3. Scroll through the group list by pressing the Up or Down key.
4. When the group you want highlights, press the **Options** soft key.
5. Select each option and change the settings, as you want. The following options are available:

   - **Call Ring Tone**: allows you to set a ring tone to be used when you receive a call from a person in the group.

- **SMS Tone**: allows you to set a ring tone to be used when you receive a message from a person in the group.
- **Graphic**: allows you to set a graphic icon to be displayed when you receive a call from a person in the group.
- **Group Name**: allows you to assign a name to the group. For further details about how to enter characters, see page 43.

6. When you are finished, press the **C** or key.

Speed-dialing

Once you have stored phone numbers in Phonebook, you can set up to eight speed-dial entries by pressing the associated number key.

Setting Up Speed-dial Entries

1. When the idle screen displays, press the **Ph.Book** soft key.
2. Scroll to **Speed Dial** by pressing the Up or Down key and press the **Select** soft key.
3. Select the key to which you wish to assign the speed-dialing number, from the **2** to **9** keys, and press the **OK** soft key.

   Note: Memory location 1 is reserved for your Voice Mail server number.

   If you have already assigned a number to the key, the **Options** soft key replaces the **OK** soft key. Go to step 6.
4. Select a Phonebook entry from the list and press the **View** soft key.
5. Select a number, if the entry has more than one, by pressing the Up or Down key and press the **Select** soft key.

6. Once you have assigned a number to the key, you can use the following options by pressing the **Options** soft key:
   - **Change**: allows you to assign a different number to the key.
   - **Delete**: allows you to clear the setting so that no number is assigned to the key.
   - **Delete All**: allows you to clear the settings for all keys so that no numbers are assigned to any of the keys.
   - **Number**: allows you to view the number assigned to the key.
7. When you are finished, press the **C** or key.

Speed-dialing from Phonebook

To speed-dial the numbers assigned to keys **2** to **9**, press and hold the appropriate key.

Deleting All of the Phonebook Entries

You can delete all of entries in the selected memory or both memories.

1. When the idle screen displays, press the **Ph.Book** soft key.
2. Scroll to **Delete All** by pressing the Up or Down key and press the **Select** soft key.
3. To place a check mark by the memory you want to empty, **All**, **SIM** or **Phone**, press the **Mark** soft key.

   You can remove the check mark by pressing the **Unmark** soft key.
4. When you are finished marking, press the **Delete** soft key to delete the entries in the selected memory.
5. Enter the phone password and press the **OK** soft key.

Note: The password is preset to “00000000” at the factory. To change this password.

6. When the confirming message appears, press the **Yes** soft key.

   To cancel the deletion, press the **No** soft key.

7. When you are finished, press the **C** or key.

Checking the Memory Status

You can check how many names and numbers are stored in Phonebook, in both the SIM card and phone memories. You can also see the capacity of both memories.

1. When the Idle screen displays, press the **Ph.Book** soft key.
2. Select the **Memory Status** option by pressing the Up or Down key and press the **Select** soft key.
3. Press the Up or Down key to view the number of existing and remaining entries available in the SIM card and phone’s memory.
4. When you are finished, press the **C** or key.

Entering Text

Your phone provides the ability to enter text, such as when storing a name in Phonebook, creating your personal greeting or scheduling events on your calendar. You can enter alphanumeric characters by using your phone's keypad.

Your phone has the following text input modes:

- **T9 mode**

  This mode allows you to enter words with only one keystroke per letter. Each key on the keypad has more than one letter; for example, when you press the **5** key once, J, K or L displays. T9 mode automatically compares your keystrokes with an internal linguistic dictionary to determine the correct word, thus requiring far fewer keystrokes than the traditional Alphabet mode.

- **Alphabet mode**

  This mode allows you to enter letters by pressing the key labeled with the letter you want. Press the key to enter once, twice, three or four times until it displays.

- **Number mode**

  This mode allows you to enter numbers.

- **Symbol mode**

  This mode allows you to enter various symbols and special characters.

Changing the Text Input Mode

When you are in a field that allows characters to be entered, you will notice the text input mode indicator on the display.

Example: Writing a text message

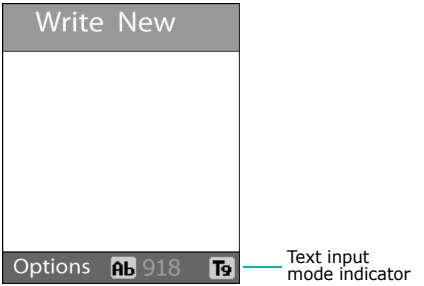

To select	Press the right soft key until
T9 mode	T9 displays. See page 44.
Alphabet mode	A displays. See page 46.
Number mode	1 displays. See page 47.
Symbol mode	the symbol list displays. See page 48.

Using T9 Mode

T9 ia a predictive text input mode that allows you to key in any character using single keystrokes. This text input mode is based on a built-in dictionary.

To enter a word in T9 mode:

1. When you are in T9 mode, start entering a word by pressing the **2** to **9** keys. Press each key only once for each letter.

   Example: To enter "Hello" in T9 mode, press the **4**, **3**, **5**, **5** and **6** keys.

The word that you are typing appears on the display. It may change with each key that you press.

2. Enter the whole word before editing or deleting the keystrokes.

3. When the word displays correctly, go to step 4.

   If not, press the **0** key or the Up or Down key repeatedly to display alternative word choices for the keys that you have pressed.

   Example: Both "Of" and "Me" use the **6** and **3** keys. The phone displays the most commonly used choice first.

4. Put a space by pressing the # key and start entering the next word.

To add a new word into the T9 dictionary:

1. After pressing the keys corresponding to the word you want to add, press the **0** or Down key to display the alternative words.

2. When you press the **0** or Down key at the last alternative word, the display shows **Add** on the bottom line. Press the **Add** soft key.

3. If necessary, clear the word using the **C** key and enter the word you want to add using Alphabet mode. See page 46.

4. Press the **OK** soft key.

   The word is added to the T9 dictionary and becomes the first word for the associated keypress.

- To enter periods, hyphens or apostrophes, press the **1** key. T9 mode applies grammar rules to ensure that the correct punctuation is used.

Example: The **1** key is used twice to display two punctuation marks:

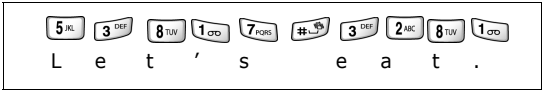

- To shift the case in T9 mode, use the * key. There are three cases; Lower case (ab), Initial Capital (Ab) and Capital lock (AB).
- You can move the cursor by using the Left and Right keys. To delete letters, press the **C** key. Press and hold the **C** key to clear the display.

Using Alphabet Mode

Use the **1** to **0** keys to enter your text.

1. Press the keys labeled with the letter you want:
   - Once for the first letter
   - Twice for the second letter
   - And so on
2. Select the other letters in the same way.

Note: The cursor moves to the right when you press a different key. When entering the same letter twice or a different letter on the same key, just wait for a few seconds for the cursor to move to the right automatically, and then select the next letter.

Refer to the table below for further details about the characters available:

Key	Characters in the Order Displayed	
	Upper Case	Lower Case
1	Space . 1 ! ? & ¡ ¿ §	. @ % _ £ $ ¥ ¤ §
2	A B C 2 Ä Å Æ Ç Γ	a b c 2 à ä åæ Γ
3	D E F 3 É Δ Φ	d e f 3 è é Φ
4	G H I 4 Θ Ψ	g h i 4 ì Ψ
5	J K L 5 Λ	j k l 5 Λ
6	M N O 6 Ñ Ø Ö ö	m n o 6 ñ ø ò ö
7	P Q R S 7 Π Σ Ξ	p q rs 7 ß Σ Ξ
8	T U V 8 Ü ü	t u v 8 ù ü
9	W X Y Z 9 Ω	w x y z 9 Ω
0	0 * # , ; ' " =	/ : - + ( ) < >

- To insert a space, press the # key.
- To shift the case in Alphabet mode, use the * key. There are three cases; Lower case (ab), Initial Capital (Ab) and Capital lock (AB).
- You can move the cursor using the Left and Right keys. To delete letters, press the **C** key. Press and hold the **C** key to clear the display.

Using Number Mode

Number mode enables you to enter numbers into a text message. Press the keys corresponding to the digits you want to enter.

Using Symbol Mode

Symbol mode enables you to insert symbols into a text message.

To	Press the
select a symbol	corresponding number key.
display more symbols	Up or Down key.
clear the symbol(s)	**C** key. When the input field is empty, this key returns the screen to the previous mode.
insert the symbol(s) into your message	**OK** soft key.
cancel your input and return to the previous mode	**Back** soft key.

Options During a Call

Your phone provides a number of control functions that you can use during a call.

Putting a Call on Hold

If your network supports this service, you can place the current call on hold and make another call at any time.

To place a call on hold, simply press the **Hold** soft key. You can reactivate the call whenever you want, by pressing the **Unhold** soft key.

To make a call while you have a call in progress:

1. Enter the phone number that you wish to dial or look it up in Phonebook.

   For details about searching for a number in Phonebook, see page 38.

2. Press the key to dial the second call.

   The first call is automatically put on hold.

Or,

1. Put the current call on hold by pressing the **Hold** soft key.
2. Make the second call in the normal way.

When you have an active call and a call on hold, you may switch between the two calls, changing the one on hold to active and placing the other on hold.

To switch between the two calls, simply press the **Swap** soft key.

The current call is placed on hold and the call on hold is reactivated so that you can continue conversing with the other person.

When you want to finish, end each call normally by pressing the key.

Using the Menu Functions

During a call, you can access the main menu functions.

1. Press the **Options** soft key.
2. Press the **OK** soft key when the **Menu** option highlights.
3. Press the Up or Down key to scroll through the menu list.

   Note: You cannot use some menus during a call. They are deactivated on this list.

4. When the menu you want highlights, press the **Select** soft key.
5. If the selected menu has sub-options, repeat steps 3 and 4.

For further details about the menu functions available, see the list on page 56.

Switching the Microphone Off (Mute)

You can temporarily switch your phone's microphone off so that the other person on the phone cannot hear you.

To switch the microphone off temporarily:

1. Press the **Options** soft key.
2. Press the Down key to highlight the **Mute** option.
3. Press the **OK** soft key.

   The other person can no longer hear you.

To switch the microphone back on:

1. Press the **Options** soft key.

2. Press the Down key to highlight the **Unmute** option.
3. Press the **OK** soft key.

   The other person can hear you again.

Muting or Sending Key Tones

These options allow you to turn the key tones off or on. If the **Mute Keys** option is selected, your phone does not transmit the DTMF (Dual Tone Multi-Frequency) tones of the keys, which allows you to press keys without hearing key tones during a call.

Note: To communicate with answering machines or computerized telephone systems, the **Send Keys** option must be selected.

Sending a Sequence of DTMF Tones

You can send the DTMF tones after entering the entire number you need to send.

This option is helpful for entering a password or an account number when you call an automated system, like a banking service.

To send the DTMF tones:

1. When you are connected to the teleservice system, press the **Options** soft key.
2. Press the Down key to highlight the **Send DTMF** option.
3. Press the **OK** soft key.
4. Enter the number you want to send and press the **OK** soft key.

   The tones are sent.

Searching for a Number in Phonebook

You can search for a number in Phonebook during a call.

1. Press the **Options** soft key.
2. Press the Down key to highlight the **Phonebook** option.
3. Press the **OK** soft key.

   The Phonebook entries are listed.
4. Enter the name that you wish to find.

   If you enter the first few letters of the name, the Phonebook entries are listed, starting with the first entry matching your input.
5. To view the highlighted entry, press the **View** soft key.

For further details about the Phonebook feature, see page 34.

Call Waiting

You can answer an incoming call while you have a call in progress, if your network supports this service and you have set the **Call Waiting** menu (**Menu 8.2**) to **Activate**; see page 112. You are notified of an incoming call by a call waiting tone.

To answer a call while you have a call in progress:

1. Press the key to answer the incoming call. The first call is automatically put on hold.
2. To switch between the two calls, press the **Swap** soft key.
3. To end the call on hold, press the **Options** soft key and select the **End Held Call** option.

   To end the current call, press the key.

Making a Multi-party Call

A multi-party call is a network service that allows up to six people to take part simultaneously in a multi-party or conference call. For more information about subscribing to this service, contact your service provider.

Setting up the Multi-party Call

1. Call the first participant in the normal way.
2. Call the second participant in the normal way. The first call is automatically put on hold.
3. To join the first participant to the multi-party call, press the **Options** soft key and select the **Join** option. Press the **OK** soft key.
4. To add a new person to the multi-party call, call the person in the normal way and press the **Options** soft key. Select the **Join** option and press the **OK** soft key.

You can add incoming callers by answering the call, pressing the **Options** soft key, and selecting the **Join** option. Repeat as required.

Having a Private Conversation With One Participant

1. Press the **Options** soft key and choose the **Select One** option. Press the **OK** soft key.

   The list of call participants appears.

2. Highlight a person from the list by pressing the Up or Down key, and press the **Select** soft key or the key.
3. When the **Private** option highlights, press the **OK** soft key.

   Now you can talk privately to that person. The other participants can still converse with each other.

4. To return to the multi-party call, press the **Options** soft key and select the **Join** option. Press the **OK** soft key.

   All the multi-party call participants can now hear each other.

Dropping One Participant

1. Press the **Options** soft key and choose the **Select One** option. Press the **OK** soft key.

   The list of call participants appears.

2. Highlight a person from the list by pressing the Up or Down key, and press the **Select** soft key or the key.

3. Press the Down key to select the **Remove** option and press the **OK** soft key.

   The call ends with that participant, but you can continue to talk to the others.

4. When you want to end the multi-party call, press the key.

Using the Menus

The phone offers a range of functions that allow you to tailor it to your needs. These functions are arranged in menus and sub-menus.

The menus and sub-menus can be accessed by scrolling using the Navigation keys or by using the shortcuts.

Accessing a Menu Function by Scrolling

1. In Idle mode, press the **Menu** soft key to access Menu mode.
2. Scroll using the Up or Down key to reach a main menu, **Phone Settings** for example. Press the **Select** soft key or the Right key to enter the menu.
3. If the menu contains sub-menus, **Language** for example, you can access them by scrolling using the Up or Down key and pressing the **Select** soft key or the Right key.

   If the menu that you have selected contains further options, repeat this step.

4.

To	Press the
scroll through the menus	Up or Down key, or use the Volume keys.
confirm the chosen setting	**Select** soft key or the Right key.
return to the previous menu level	soft key or the Left key.
exit the menu without changing the settings	key.

Using Shortcuts

The menu items, such as menu, sub-menus and options, are numbered and can be accessed quickly by using their shortcut numbers. The shortcut number is shown at the bottom right next to the soft key on the display. Simply press the **Menu** soft key and enter the number of the menu you want.

Note: The numbers assigned to each menu are indicated on the list on page 56. They may not match the menu number on the phone, depending on the services supported by your SIM card.

Example: Accessing the **Language** menu.

1. Press the **Menu** soft key.
2. Press the **6** key for **Phone Settings**.
3. Press the **4** key for **Language**.

   The languages available display.

List of Menu Functions

The following list shows the menu structure available and indicates the number assigned to each option and the page where you can find a description of each feature.

Note: If you use a SIM AT card that provides additional services, the **SIM AT** menu displays when you press the **Menu** soft key to enter Menu mode. For further details, see your SIM card instructions.

1. Text Messages (see page 62)

1.1 Inbox
1.2 Outbox
1.3 Write New
1.4 Templates
1.5 Settings
    1.5.1 T-Mobile*

1.5.1.1 Service Center
1.5.1.2 Default Destination
1.5.1.3 Default Type
1.5.1.4 Default Validity
1.5.1.5 Setting Name
1.5.2 Setting 2*
1.5.3 Setting 3*
1.5.4 Setting 4*
1.5.5 Common Setting
1.6 Delete All
1.7 Memory Status
1.7.1 SIM Memory
1.7.2 PHONE Memory
1.7.3 CB Memory
1.8 Voice Mail
1.8.1 Connect to Voice Server
1.8.2 Voice Server Number
1.9 Broadcast

2. Picture Messages (see page 71)

2.1 Inbox
2.2 Outbox
2.3 Draft
2.4 Write New
2.5 Templates
2.6 Delete All
2.7 Memory Status

* Shows only if supported by your SIM card.

3. Call Records (see page 82)

- 3.1 Missed Calls
- 3.2 Incoming Calls
- 3.3 Outgoing Calls
- 3.4 Delete All
- 3.5 Call Time
  - 3.5.1 Last Call
  - 3.5.2 Total Outgoing
  - 3.5.3 Total Incoming
  - 3.5.4 Reset Timers

4. Television (see page 85)

- 4.1 TV
  - 4.1.1 Channel
  - 4.1.2 Display
  - 4.1.3 Timer
- 4.2 TV Image
- 4.3 Memory Status

5. Sound Settings (see page 89)

- 5.1 Ring Tone
- 5.2 Ring Volume
- 5.3 Alert Type
- 5.4 Keypad Tone
- 5.5 Message Tone
  - 5.5.1 SMS Tone
  - 5.5.2 SMS-CB Tone
- 5.6 Folder Tone
  - 5.6.1 Off
  - 5.6.2 Future
  - 5.6.3 Crystal
- 5.7 Power On/Off
  - 5.7.1 Off
  - 5.7.2 Classical
  - 5.7.3 Cheerful
- 5.8 Extra Tones
  - 5.8.1 Error Tone

5.8.2 Minute Minder
5.8.3 Connect Tone

6. Phone Settings (see page 93)

6.1 Display Settings
6.1.1 Wallpaper
6.1.2 Power On
6.1.3 Power Off
6.1.4 Menu Style
6.1.5 Back Light
6.1.6 Service Light
6.1.7 Graphic Logo
6.1.8 Front LCD
6.2 Greeting Message
6.3 Own Number
6.4 Language
6.5 Security
6.6 Extra Settings
6.7 Short Cut
6.7.1 Key Up
6.7.2 Key Down
6.8 Infrared Activate
6.9 Reset Settings

7. Organizer (see page 99)

7.1 Alarm
7.1.1 Once Alarm
7.1.2 Daily Alarm
7.1.3 Morning Call
7.1.4 Remove Alarm
7.1.5 Autopower
7.2 Calendar
7.3 Time & Date
7.3.1 Set Time
7.3.2 Set Date
7.3.3 World Time
7.3.4 Time Format
7.4 Calculator

7.5 To Do List
7.6 Voice Memo
7.6.1 Record
7.6.2 Memo List
7.6.3 Delete All
7.6.4 Memory Status
7.7 Currency Exchange

8. Network Services (see page 111)

8.1 Call Forwarding
8.1.1 Forward Always
8.1.2 Busy
8.1.3 No Reply
8.1.4 Unreachable
8.1.5 Cancel All
8.2 Call Waiting
8.2.1 Voice Calls
8.2.2 Data Calls
8.2.3 Cancel All
8.3 Network Selection
8.3.1 Automatic
8.3.2 Manual
8.4 Caller ID
8.4.1 Default
8.4.2 Hide Number
8.4.3 Send Number

9. Funbox (see page 115)

9.1 t-zones
9.1.1 Home
9.1.2 Favorite
9.1.3 Go To URL
9.1.4 Clear Cache
9.1.5 Push Message
9.2 Games
9.3 Sounds
9.4 Images

9.5 Delete All
9.6 Memory Status
    9.6.1 Games
    9.6.2 Sounds & Images

Text Messages

Short Message Service (SMS) allows you to send and receive short text messages to and from other GSM mobile phones. In addition, your phone supports the Enhanced Messaging Service (EMS), which enables you to include simple pictures, melodies, and animated images in your messages. To use this feature, you must subscribe to your service provider's message service.

When the Message icon ( ) appears, you have received new text messages. If the memory is full, an error message displays and you cannot receive any new messages. Use the **Delete** option in each message box to delete the obsolete ones.

Inbox *(Menu 1.1)*

This message box is used to store the messages that you have received.

When you enter this menu, the list of messages in the box displays with the senders' phone numbers or names, if available in your Phonebook.

1. Select a message from the list and press the **View** soft key to read the message contents.
2. To scroll through the contents, press the Up or Down key.
3. To scroll to the previous or next message, press the * or # key.

While reading a message, you can choose the following options by pressing the **Options** soft key:

Delete: allows you to delete the message.

Forward: allows you to send/forward the message. For further details about how to send a message, see page 64.

Text Reply: allows you to reply to the sender by sending a text message.

Call Back: allows you to call the sender back.

Cut Address: allows you to extract the sender's number and URL, e-mail addresses or phone numbers from the message text.

Move to Phone: allows you to move the message from the SIM card to the phone's memory. This option is only available when you select a message stored in the SIM card.

Select Objects: allows you to save media objects, such as sounds or images, from the message into your phone. You can use the objects when writing a message. For details, see page 65.

Outbox *(Menu 1.2)*

This message box is used to store the messages that you have already sent or will send.

When you enter this menu, the list of messages in the box displays with the recipients' phone numbers or names, if available in your Phonebook.

1. Select a message from the list and press the **View** soft key to read the message contents.
2. To scroll through the contents, press the Up or Down key.
3. To scroll to the previous or next message, press the * or # key.

While reading as message, you can choose the following options by pressing the **Options** soft key:

Delete: allows you to delete the message.

Send: allows you to send/resend the message. For further details about how to send a message, see page 64.

Cut Address: allows you to extract the destination number and URL, e-mail addresses or phone numbers from the message text.

Move to Phone: allows you to move the message from the SIM card to the phone memory. This option is only available when you select a message stored in the SIM card.

Select Objects: allows you to save media objects, such as sounds or images, from the message into your phone. You can use the objects when writing a message. For details, see page 65.

Write New *(Menu 1.3)*

In this menu, you can write and send a text message.

Note: When you add media objects to the message, the number of characters you can enter decreases.

Creating a Simple Text Message

1. Create your message.

   Note: For further details about entering characters, see page 43.

2. When you finish entering the message, press the **Options** soft key. The following options are available:

   - **Send Only**: allows you to send the message. The message is deleted after sending.
   - **Save and Send**: allows you to save a copy of the message and then send the message. You can read the message in your Outbox.
   - **Save Only**: allows you to save the message so that it can be sent later. You can read the message in your Outbox.

- For further details about **Text Formatting**, **Add Objects**, **Add Templates**, **Add Phonebook**, **Add Bookmark** and **Language** options, see page 65.

3. Select **Send Only** or **Save and Send**, and press the **Select** soft key.

   If you want to just save the message, select **Save Only**. After saving the message, the phone returns to the **Text Messages** menu.

4. If you select a save option, choose the memory location and press the **OK** soft key.

5. Enter a destination number and press the **OK** soft key.

   The message is sent.

Note: If the phone fails to send the message, it will ask you if you want to retry. Press the **OK** soft key to confirm. Otherwise, press the **Exit** soft key to return to the Write New screen.

Creating a Message Using the Options

1. Create a message.

2. Press the **Options** soft key.

3. Select one of the following options by using the Up and Down keys and pressing the **Select** soft key:

   - **Text Formatting**: allows you to format the style of the text.

     For the **Size** attribute, **Normal**, **Large** and **Small** sizes are available. For the **Underline** and **Strikethrough** attributes, select **On** or **Off**.

     These attributes can be combined.

   - **Add Objects**: allows you to add a sound, melody, picture or animated image to the message. Select the category of

the object to be added. In each category, you can select from the various factory-set items or choose an item received from other sources, such as the Internet or other phones.

- **Add Templates**: allows you to apply one of the preset message templates to the text. Select one of five messages stored in the **Templates** menu (**Menu 1.4**). For further details, see page 66.
- **Add Phonebook**: allows you to add a Phonebook entry to your message. Select one from the list.
- **Add Bookmark**: allows you to add a web page's address stored in your Favorite list (**Menu 0.1.2**). Select one from the list.
- **Language**: allows you to change the language to be used in T9 input mode. Select the language you want to use.

4. Complete the message, and send or save it by following the procedure from step 2 on page 64.

Templates *(Menu 1.4)*

Using this menu, you can preset a maximum of five messages that you use most frequently.

Select an empty location or the message template you want and press the **Options** soft key.

The following options are available:

Edit: allows you to write a new message or edit the message.

Note: For further details about how to enter characters, see page 43.

Send Message: allows you to retrieve the message. Once you have completed the message, you can send, save and send, or simply save it. For further details about how to send a message, see page 64.

Delete: allows you to delete the message. You are asked to confirm the deletion by pressing the **Yes** soft key.

Settings *(Menu 1.5)*

In this menu, you can set up default message information. A setting group is a collection of settings required to send messages. The number of setting groups available depends on the capacity of your SIM card.

Note: The last setting you accessed is automatically activated for sending messages.

T-Mobile each group has its own sub-menu.

Service Center: allows you to store or change the number of your message center, which is required when sending messages. You must obtain this number from your service provider.

Default Destination: allows you to store the default destination number. The number automatically displays on the Destination screen when you create a message.

Default Type: allows you to set the default message type to **Text**, **Fax**, **Email** or **Paging**. The network can convert the messages into the selected format.

Default Validity: allows you to set the length of time your text messages are stored in the message center while attempts are made to deliver them.

Setting Name: allows you to give a name to the setting group currently being defined.

Setting x (where **x** is the setting group number): each group has its own sub-menu.

Service Center: allows you to store or change the number of your message center, which is required when sending

messages. You must obtain this number from your service provider.

Default Destination: allows you to store the default destination number. The number automatically displays on the Destination screen when you create a message.

Default Type: allows you to set the default message type to **Text**, **Fax**, **Email** or **Paging**. The network can convert the messages into the selected format.

Default Validity: allows you to set the length of time your text messages are stored in the message center while attempts are made to deliver them.

Setting Name: allows you to give a name to the setting group currently being defined.

Delete All *(Menu 1.6)*

This menu allows you to delete all of the text messages in each message box. You can also delete all of your messages at one time.

To	Press the
select a message box to clear	Up or Down key. To delete all of your messages, select **All Messages**.
place a check mark	**Mark** soft key.
remove a check mark	**Unmark** soft key.
delete the marked messages	**Delete** soft key.

When a confirming message displays, press the **Yes** soft key to confirm.

Memory Status *(Menu 1.7)*

This menu shows how many messages are currently stored in the SIM, PHONE and CB (Cell Broadcast) memories.

Voice Mail *(Menu 1.8)*

This menu allows you to access your voice mailbox, if your network supports this service.

The following options are available:

Connect to Voice Server: before using the Voice Mail feature, you must enter the voice server number obtained from your service provider; see menu option **1.8.2**. You can then select this option and press the **OK** soft key to listen to your messages.

You can quickly connect to the voice server by pressing and holding the **1** key in Idle mode.

Voice Server Number: allows you to change the voice mail server number, if necessary.

To	Press the
enter the server number	corresponding numeric keys.
correct a digit	**C** key.
move the cursor to the left or right without clearing a digit	Left or Right key.

Note: Voice Mail is a network feature. Please contact your service provider for further details.

Broadcast *(Menu 1.9)*

This network service allows you to receive text messages on various topics, such as the weather or traffic. Cell Broadcast

(CB) messages display as soon as they are received, provided that:

- the phone is in Idle mode.
- the **Receive** option is set to **Enable**.
- the message channel is currently active on the channel list.

The following options are available:

Read: lets you view the received message. The **Volatile** box displays the messages from the network, but loses its contents as soon as the phone is switched off. Scroll through the message by using the Up and Down keys. While reading a message, press the **Save** soft key to store the message in the **Archive** box for later retrieval.

Receive: allows you to enable or disable the reception of broadcast messages.

Channel List: allows you to indicate the channels from which you wish to receive cell broadcast messages. The following options are available:

Select: use to enable or disable channels on the list by marking or unmarking them respectively. A check mark displays in front of each selected channel.

Add Channel: use to enter the ID and title for a new channel.

Delete: use to remove a channel from the list.

Edit: use to change the ID and title of an existing channel.

Language: allows you to select your preferred language to display cell broadcast messages.

Please contact your service provider for further details.

Picture Messages

This menu allows you to use the Multimedia Message Service.

Multimedia Message Service (MMS) is a messaging service very similar to Short Message Service (SMS). It provides automatic and immediate delivery of personal multimedia messages from phone to phone or from phone to e-mail.

In addition to the familiar text content of text messages, multimedia messages can contain images, graphics, voice and audio clips. An MMS message is a multimedia presentation in a single entry. It is not a text file with attachments.

Using the MMS feature, your phone can receive and send messages that contain multimedia files, such as your photos, sounds and images you downloaded from the Internet and voice memos you recorded. This function is available only if it is supported by your service provider. Only phones that offer multimedia message features can receive and display multimedia messages.

Inbox *(Menu 2.1)*

Viewing a Message When You Receive it

When a new multimedia message comes in, the display shows a text notification along with the sender's number.

1. Press the **Select** soft key to view brief information about the message, such as the sender's number, the message size and the subject.

   If you want to view the message later in the Inbox, press the **Exit** soft key.

2. To scroll through the message information, press the Up or Down key.

3. Press the **Options** soft key to use the following options:
   - **Retrieve**: retrieves the message from the MMS server.
   - **Delete**: deletes the message.
   - **More Information**: shows you detailed information about the message.
4. To read the message, press the **Select** soft key when **Retrieve** is highlighted.

   Your phone retrieves the message contents from the server and displays it.
5. To scroll through the message, press the Up or Down key.
6. When you are finished, press the key.

Viewing a Received Message in the Inbox

When you access the **Inbox** menu (**Menu 2.1**), the list of multimedia messages you received displays with the senders' phone numbers, if they are available in your Phonebook, or subjects. The icons on the left tell you the status of the messages.

- : Messages that have been opened.
- : Messages that are unopened.

1. Select a message on the list and press the **Select** soft key.

   The message displays and scrolls to the next page, if it has one; for details about setting the time, see page 78.
2. Press the **OK** soft key to go to the message view screen.

   Or, the display automatically switches to the screen after a few seconds.
3. To scroll through the message, press the Up or Down key.

If the message has more than one page, you can scroll through the pages by using the Left and Right keys.

While viewing a message, you can choose the Message options by pressing the **Options** soft key.

If you are viewing a new message, the options are the same as when you view a message as soon as you receive it. See page 72.

When you are reviewing a message retrieved from the MMS server, the following options are available:

Delete: deletes the message.

Reply: allows you to reply to the sender by sending a text or multimedia message.

Callback: allows you to call the sender back.

Cut Address: allows you to extract the sender's number or e-mail address and URL, e-mail addresses or phone numbers from the message text.

Forward: allows you to forward the message to another person.

Save Picture: allows you to save an image from the message into your phone. Images are stored in the **Images** folder (**Menu 9.4**).

Save Sound: allows you to save a sound from the message into the **Sounds** folder (**Menu 9.3**).

Information: shows you information about the message, such as the message status, subject, sender's address or phone number, message size, priority and the time and date when the message was received.

Outbox *(Menu 2.2)*

When you access this menu, the list of the multimedia messages you sent or saved displays. The icons on the left tell you the status of the messages.

- : Messages currently being sent
- : Messages sent
- : Messages your phone couldn't send
- : Messages to be sent
- : Messages deferred

1. Select a message on the list and press the **Select** soft key.

   The message displays and scrolls to the next page, if it has one, after a specified time; for details about setting the time, see page 78.

2. Press the **OK** soft key to go to the message view screen.

   Or, the display automatically switches to the screen after a few seconds.

3. To scroll through the message, press the Up or Down key.

   If the message has more than one page, you can scroll through the pages by using the Left and Right keys.

While viewing a message, you can choose the following options by pressing the **Options** soft key:

Delete: deletes the message.

Cut Address: allows you to extract the destination numbers or e-mail addresses and URL, e-mail addresses or phone numbers from the message text.

Send: allows you to send/resend the message.

Edit Message: allows you to change the message contents, sound, picture or text.

Information: shows you information about the message, such as the message status, subject, sender and recipients' addresses or phone numbers, message size, priority and the time and date when the message was sent.

Draft *(Menu 2.3)*

After creating a multimedia message, you can store it in this message box for later sending.

For further details about viewing a message, see "Outbox" on page 74.

Write New *(Menu 2.4)*

This menu allows you to create a new multimedia message and then send it to multiple destinations.

Creating and Sending a Picture Message

1. Enter the subject of your message and press the **OK** soft key.

   For further details about entering characters, see page 43.

2. When **Add Here** highlights, press the **Options** soft key and add the message contents using one of the following options:

   - **Add Text**: enter the message text and press the **OK** soft key.
   - **Add Picture**: allows you to add a picture stored in the **Images** folder (**Menu 9.4**). Choose a picture and press the **Select** soft key. You may not be able to add some downloaded images if they are not in the correct format.

- **Add Sound**: allows you to add a sound file. Select **Record** to record a new voice memo, or **Sound List** to add one of the sounds in the Sounds folder (**Menu 9.3**) or voice memo list (**Menu 7.6.2**). You may not be able to add some downloaded sounds if they are not in the correct format.
- **Send**: allows you to send the message. Use this option when you finish creating the message. This option is activated after you add content to the message.
- **Save**: saves the message in the **Draft** (**Menu 2.3**) or **Templates** (**Menu 2.5**) box for later use. This option is activated after you add content to the message.
- **Settings**: allows you to change the message settings. For details about setting options, see page 78. After changing the settings, you need to press the soft key or the **C** key to go to back to the options screen.
- **Add Destination**: allows you to enter destination numbers or addresses. See steps 7 to 12 starting from page 77. After adding them, you need to press the soft key or the **C** key to go to back to the option screen.
- **Preview**: shows your message as it will display on the recipient's phone.

Note: You can add text, an image and a sound once for each page.

3. When the added content displays, press the Down key to highlight **Add Here**.
4. Repeat steps 2 and 3 until you finish creating your message.
5. If you want to change the added items, press the Up or Down key to highlight one and press the **Options** soft key. The following options are available:

- **Add Page**: allows you to add more pages.

  After adding pages, you can move to each page using the Left or Right key on the message screen.

- **Delete**: deletes the item from your message.

- **Duration**: allows you to set when and how long text, an image or a sound displays on the message presentation screen. When the message is opened, the display shows the item after a specified time in **Set Start Time** and scrolls to the next item after a specified time in **Set Duration**.

- **Send**: allows you to send the message.

- **Save**: saves the message in the **Draft** (**Menu 2.3**) or **Templates** (**Menu 2.5**) box for later use.

- **Settings**: allows you to change the message settings. For details about setting options, see page 78.

- **Add Destination**: allows you to enter destination numbers or addresses. See steps 7 to 12.

- **Preview**: shows your message as it will display on the recipient's phone.

Note: The options available are different depending on whether the item you select on the message screen is text, an image or sound.

6. When you are finished creating the message, choose **Send** from the options and press the **Select** soft key.

7. Select a destination type (**To**, **Cc** or **Bcc**), enter a destination number or address and press the **Select** soft key.

8. Choose one of the following options and press the **Select** soft key:

- **Phone Number**: allows you to enter the phone number you want.
- **E-Mail Address**: allows you to enter the e-mail address of the recipient.
- **Phone Book**: allows you to retrieve a number from your Phonebook.

9. Enter a number or an e-mail address, or select a number from Phonebook.

10. When the correct number or address displays, press the **OK** soft key.

11. To add a destination, press the **Select** soft key when **Add Destination** highlights. Repeat from step 8.

    If you want to edit the destinations, select one and press the **Select** soft key. You can change or delete it.

12. When you are finished adding the numbers or addresses to the destination type, press the **C** key or the soft key.

13. To enter additional numbers or addresses, repeat steps 7 through 12.

    You can enter up to 10 destinations each for **To**, **CC** and **Bcc**.

14. When you are finished entering the destinations, select **Send Message** and press the **Select** soft key on the Picture Msg Send screen.

    Your phone sends the message.

Using Message Setting Options

When you select **Settings** from the message options, the following options are available:

Delivery Report: when this option is enabled, the network informs you whether or not your message has been delivered.

Read Reply: when this option is enabled, your phone sends a request for a reply along with your message to the recipient.

Auto Download: you can set whether or not your phone retrieves new incoming messages from the MMS server without notifications. When this option is enabled, the phone automatically retrieves new messages from the server. As soon as you receive a message you can use more options while you are reading. See page 73 for details about the options.

Message Acceptance: you can specify the category of messages you want to receive.

Hide ID: when this option is enabled, your phone number does not display on the recipient's phone.

Expiry Date: you can select the length of time your messages are stored in the message center after they are sent.

Delivery Time: you can set a delay time before the phone sends your messages.

Priority: you can select the priority level of your messages.

Report Allowed: when this option is enabled, the sender of an incoming message receives a delivery report from the network.

Page Duration: you can set the length of time one page of a received message displays on the message presentation screen. After a specified time, the display automatically scrolls to the next page.

Templates *(Menu 2.5)*

This menu stores messages you saved as templates so that you can use them to make new messages.

1. Scroll through the template list using the Up and Down keys.
2. When the message template you want highlights, press the **Select** soft key.
3. Press the **OK** soft key to use the following options, or the display automatically shows the options after a specified time:
   - **Edit Message**: allows you to send a message using the template. For further details about how to send a message, see page 75.
   - **Delete**: allows you to delete the message. You are asked to confirm the deletion by pressing the **Yes** soft key.
4. Press the key to return to Idle mode.

Delete All *(Menu 2.6)*

This menu allows you to delete all of the multimedia messages in each message box. You can also delete all of your messages at one time.

To	Press the
select a message box to clear	Up or Down key. To delete all of your messages, select **All Messages**.
place a check mark	**Mark** soft key.
remove a check mark	**Unmark** soft key.
delete the marked messages	**Delete** soft key.

When a confirming message displays, press the **Yes** soft key to confirm.

Memory Status *(Menu 2.7)*

You can check the amount of the memory being used and the memory remaining for multimedia messages.

Each time you press the **Next** soft key, the display shows the total space, including the free and used space. It also shows how much space is currently occupied by each message box.

Call Records

In this menu, you can view the:

- calls you missed, received or dialed.
- length of your calls.
- cost of your calls.

Notes:

- You can access the numbers in the three types of call records by pressing the key in Idle mode.
- The number of call records the phone can store may be different depending on your SIM card.

Missed Calls *(Menu 3.1)*

This menu lets you view the last 20 numbers of the calls you received, but did not answer.

The number and name, if available, display together with the time and date when the call was received.

By pressing the **Options** soft key, you can:

- edit the number, if available, and dial it or save it in Phonebook.
- delete the call from the list.

You can also dial the number by pressing the key.

Incoming Calls *(Menu 3.2)*

This menu lets you view the last 20 numbers of the calls you received.

The number and name, if available, display together with the time and date when the call was received.

By pressing the **Options** soft key, you can:

- edit the number, if available, and dial it or save it in Phonebook.
- delete the call from the list.

You can also dial the number by pressing the key.

Outgoing Calls *(Menu 3.3)*

This menu lets you view the last 20 numbers you dialed.

The number and name, if available, display together with the time and date when the call was made.

By pressing the **Options** soft key, you can:

- edit the number and dial it or save it in Phonebook.
- delete the call from the list.

You can also dial the number by pressing the key.

Delete All *(Menu 3.4)*

This menu allows you to delete all of the records in each call record. You can also delete all of your call records at one time.

To	Press the
select a call record to clear	Up or Down key. To delete all of your call records, select **All Calls**.
place a check mark	**Mark** soft key.
remove a check mark	**Unmark** soft key.
delete the marked records	**Delete** soft key.

When a confirming message displays, press the **Yes** soft key to confirm.

Call Time *(Menu 3.5)*

This menu lets you view the timers for calls you made and received.

Note: The actual time invoiced for calls by your service provider may vary, depending on network features, rounding-off for billing purposes and so on.

The following options are available:

Last Call: length of the last call.

Total Outgoing: total length of all calls you made since the timer was last reset.

Total Incoming: total length of all calls you received since the timer was last reset.

Reset Timers: option used to reset the call timers. You must first enter the phone password and then press the **OK** soft key.

Note: The password is preset to “00000000” at the factory. To change this password.

Television

Your phone has a built-in TV tuner that receives TV broadcasts directly from your local stations so that you can access color TV in real time.

In addition, you can capture and download frames of any TV broadcast, such as a favorite scene or dramatic sports play, for use as a wallpaper image or power on/off image.

Note: You can quickly access the **Television** menu by pressing and holding the TV key in Idle mode.

TV *(Menu 4.1)*

This menu allows you to turn the TV tuner on and watch television.

Note:

- During a call, you cannot access the TV.
- Watching television consumes more battery power than any other phone function.

Before watching television:

- Plug the supplied ear-microphone into the jack on the left side of the phone. You can hear the TV sound or adjust the volume using only the ear-microphone. The ear-microphone also acts as an antenna.
- To use an optional cradle, place the phone on the cradle and adjust its direction so that you can see the TV screen from where you are.

To watch television:

1. Access the **TV** menu (**Menu 4.1**) to turn the TV on. You can also press and hold the TV key in Idle mode.

   The first channel or the last channel you watched displays.

2. Select a channel by entering the channel number using the number keypad or pressing the Left or Right key.

   To scroll through any saved channels, press the Up or Down key.

3.

To	Use the
adjust the volume	Volume scroll bar on the ear-microphone.
change the view mode	TV key. You can change the screen to full view and then flip it vertically.
use the TV options	**Options** soft key. For details, see the following page.
save the image of the current screen	**Capture** soft key. You can access the image in the **TV Image** menu. See page 88.

4. To turn the TV off, press the key.

Notes:

- You may not be able to see the screen clearly under direct sunlight. To see it better, adjust the brightness; see page 87.
- When you are far from the broadcast station, near a car, neon lights or in an area where high frequency electronic machines are used, the quality of TV reception may be poor. Move and try again.
- TV reception is not related to your mobile services. When there are high buildings or mountains between the broadcast station and your location, the reception may be poor. Move and try again.

Using the TV options

While watching television, press the **Options** soft key to access the TV options.

To	Press the
scroll to a different option	Up or Down key.
select the highlighted option	**Select** soft key or the Right key.

The following options are available:

Channel: allows you to save all of the available channels or the ones you watch frequently.

Auto Program: your phone automatically scans through all of the frequency bands and saves all of the available channels.

Add: allows you to search for and save the channel you want manually.

Delete: allows you to delete a channel after checking it.

Delete All: allows you to delete all of the saved channels.

Display: allows you to adjust the quality of the TV screen.

Brightness: adjusts the brightness of the screen.

Contrast: adjusts the color contrast of the screen.

Reset: resets the screen to its default status.

Timer: allows you to set the TV to automatically turn off after a specified time. The provided options are:

Off: No time limit is set.

15 Minutes: The TV will turn off after 15 minutes.

30 Minutes: The TV will turn off after 30 minutes.

TV Image *(Menu 4.2)*

In this menu, you can view the capture images of the TV screen you saved.

The display shows the latest screen image you captured. Scroll through the images using the Left and Right keys.

Press the **Options** soft key to use the following options:

Send: allows you to send the image to other people using a multimedia message.

Rename: allows you to change the name of the image.

Delete: deletes the selected image.

Delete All: allows you to delete all of the TV images.

Protection: allows you to protect the image from being deleted.

Set This Photo as: allows you to set the image as your wallpaper for the idle screen or an image to be displayed when you turn the phone on or off.

Memory Status *(Menu 4.3)*

You can check the amount of the memory being used and the memory remaining for TV images.

The display shows the total space including the used and free space.

Sound Settings

You can use the Sound Settings feature to customize various settings, such as the:

- ring melody, volume and type.
- sounds made when you press a key, receive a message, open/close the folder or switch your phone on/off.
- alert tone made every minute during a call, when you make an error or when your call is connected to the system.

Note: When the phone is in Silent mode (see page 31), you cannot change the sound settings.

Ring Tone *(Menu 5.1)*

This menu allows you to select a ring melody.

You can choose between many different melodies. If you have downloaded sounds from the Internet or the optional EasyGPRS program, you can use them in this menu.

Ring Volume *(Menu 5.2)*

This menu allows you to adjust the ring volume to one of five levels.

Use the Up and Down keys or the Volume keys on the left side of the phone to increase or decrease the volume.

Alert Type *(Menu 5.3)*

This menu allows you to specify how you are to be informed of incoming calls or the alarm settings.

The following options are available:

Light Only: the service light flashes; the phone neither rings nor vibrates.

Melody: the phone rings using the ring melody selected in the **Ring Tone** menu (**Menu 5.1**); see page 89.

Vibration: the phone vibrates but does not ring.

Vibra+Melody: the phone first vibrates three times and then starts ringing.

Keypad Tone *(Menu 5.4)*

This menu allows you to select the tone that the phone sounds when you press a key.

To turn the sound off, select **Off**.

Message Tone *(Menu 5.5)*

This menu allows you to select how the phone informs you that a new message has been received.

SMS Tone *(Menu 5.5.1)*

The following options are available for alerting you to new SMS messages:

SMS Tone x: Where **x** is one of the phone uses one of several SMS tones.

SMS-CB Tone *(Menu 5.5.2)*

The following options are available for alerting you to new cell broadcast (CB) messages:

Off: the phone does not use a CB tone.

Light Only: the service light flashes.

Vibration: the phone vibrates.

Single Beep: the phone beeps once.

SMS-CB Tonex: the phone uses one of several CB tones.

Folder Tone *(Menu 5.6)*

This menu allows you to select the tone that the phone sounds when you open or close the folder.

To turn the sound off, select **Off**.

Power On/Off *(Menu 5.7)*

This menu allows you to select the melody that the phone sounds when it is switched on and off.

To turn the sound off, select **Off**.

Extra Tones *(Menu 5.8)*

You can customize additional tones used for the phone.

To turn a given tone	Press the
on	**Mark** soft key. A check mark displays in front of the option.
off	**Unmark** soft key. The check mark no longer displays.

The following options are available:

Error Tone: sets whether or not the phone informs you when you make a mistake.

Minute Minder: sets whether or not the phone beeps every minute during an outgoing call to keep you informed of the length of your call.

Connect Tone: sets your phone to beep when your call is connected to the system.

Phone Settings

Many different features of your phone can be customized to suit your preferences. All of these features are accessed in the **Phone Settings** menu.

Display Settings *(Menu 6.1)*

In this menu, you can change various settings for the display or the backlight.

Wallpaper *(Menu 6.1.1)*

This menu allows you to change the background image or the color of the text to be displayed in Idle mode.

The following options are available:

Wallpaper: you can select a background image to be displayed on the idle screen.

To change the background image:

1. Scroll through the list by pressing the Up or Down key.

   You have various preset images available. You can also select a blank background or any images downloaded from the Internet and the optional EasyGPRS program or received in messages.

   If you set a TV capture image as the wallpaper in the **TV Image** menu (**Menu 4.2**), it displays as My Photo.icn on the list.

2. Press the **Select** soft key when the image you want highlights.

3. When the image displays, press the **Select** soft key to display it on the idle screen.

Menu Style *(Menu 6.1.4)*

This menu allows you to select the menu display style. You can choose either **Bar Style** or **Page Style**.

Back Light *(Menu 6.1.5)*

You can select whether or not the phone uses the backlight. A marginal increase in standby/talk time can be achieved by turning the backlight off.

Select the length of time the backlight is on. The backlight turns on when you press a key or receive a call or message and remains on for the specified length of time.

Service Light *(Menu 6.1.6)*

This menu allows you to select whether or not the service light is used. It also allows you to select a color in which it flashes.

Select one of the seven color settings. When the phone is ready for use, the service light flashes in the chosen color.

If you do not wish to use the service light, select **Off**.

Graphic Logo *(Menu 6.1.7)*

This menu allows you to display your service provider's logo instead of its name.

Off: the service provider's name displays in Idle mode.

On: the service provider's logo stored in your phone displays in Idle mode; if no logo has been stored, the service provider's name displays.

Front LCD *(Menu 6.1.8)*

This menu allows you to adapt the external display to your preference.

The following options are available:

Light timer: allows you to set the length of time the external display shows the image selected using the **Image Select** option.

Greeting Message *(Menu 6.2)*

This menu allows you to set a greeting to be displayed briefly when the phone is switched on.

To	Press the
clear the existing message	**C** key and hold it down until the message is cleared.
enter a new message	appropriate alphanumeric keys.
change the text input mode	right soft key.

For further details about how to enter characters, see page 43.

Own Number *(Menu 6.3)*

This function is a memory aid, which you can use to check your own phone numbers if you need to do so.

You can:

- assign a name to each of your own phone numbers registered on your SIM card.
- edit the names and numbers.

Any changes made here do not in any way affect the actual subscriber numbers on your SIM card.

Language *(Menu 6.4)*

You can select a display language. When the language option is set to **Automatic**, the language is automatically selected according to the language of the SIM card used.

Security *(Menu 6.5)*

The Security feature enables you to restrict the use of your phone to others and the types of calls.

Various codes and passwords are used to protect the features of your phone. They are described in the following sections.

Extra Settings *(Menu 6.6)*

You can turn the automatic redialing or answering features on or off.

To turn a feature	Press the
on	**Mark** soft key. A check mark displays in front of the option.
off	**Unmark** soft key. The check mark no longer displays.

The following options are available:

Auto Redial: when this option is checked, the phone makes up to ten attempts to redial a phone number after an unsuccessful call.

Note: The interval between two attempts varies.

Active Folder: when this option is checked, you can simply open the folder to answer a call.

When it is unchecked, you must press a key to answer a call, depending on the setting of the **Anykey Answer** option. See the next page.

Anykey Answer: when this option is checked, you can answer an incoming call by pressing any key, except the key and the **Reject** soft key. To reject the call, press the key or the **Reject** soft key.

When this option is unchecked, you can only press the key or **Accept** soft key.

Short Cut *(Menu 6.7)*

The Navigation keys can be used as shortcut keys. In Idle mode, they allow you to access specific menus directly. The Left and Right keys are fixed as shortcuts to the **Text Message** and **Voice Memo** menus. In this menu, you can change the shortcuts assigned to the Up and Down keys.

To assign a shortcut to a key:

1. Select the key to be used as a shortcut key by pressing the Up or Down key, and press the **Select** soft key.
2. Select the menu to be assigned to the key by pressing the Up or Down key.

   Note: To deactivate a shortcut key, select the **None** option.

3. Press the **Select** soft key to save the selection.

Infrared Activate *(Menu 6.8)*

This feature allows you to send or receive data through the infrared port.

To use an infrared connection, you must:

- configure and activate an IrDA-compliant infrared port on your PC.

- activate the infrared feature on the phone. The IrDA icon ( ) appears on the top line of the display.
- align the IrDA port on the phone with the IrDA port on your computer or another phone.

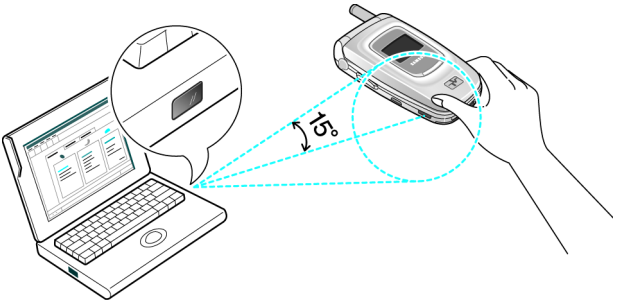

The connection is ready for data transmission.

If there is no communication between your phone and the IrDA-compliant device within 30 seconds of activating the feature, it is automatically deactivated.

Note: For optimal performance, use an optional data link cable. You can purchase one from your local Samsung dealer.

Reset Settings *(Menu 6.9)*

You can easily reset your phone to its default settings. To reset your phone:

1. Select the **Reset Settings** menu.
2. Enter the 8-digit phone password and press the **OK** soft key.

Note: The password is preset to “00000000.” To change this password.

Organizer

The Organizer feature enables you to:

- set an alarm so that the phone rings at a specific time, such as to remind you of an appointment.
- view the calendar and organise your schedule.
- set the current time and date.
- define a list of things to do.
- record voice memos.
- use the phone as a calculator for basic mathematical equations or currency exchange operations.

Alarm *(Menu 7.1)*

This feature allows you to:

- set the alarm to ring at a specific time.
- set the phone to switch on automatically and ring the alarm even if the phone is switched off.

The following options are available:

Once Alarm: the alarm rings only once and is then deactivated.

Daily Alarm: the alarm rings every day at the same time.

Morning Call: the alarm rings to wake you up in the morning.

To set an alarm:

1. Choose the type of alarm to be set and press the **Select** soft key.
2. Enter the time for the alarm to sound.

Note: Your phone is preset to use 12-hour format. To change the format, see page 103.

If you want to use the alarm options, press the **Options** soft key. The following options are available:

- **Remove Alarm**: deactivates the current alarm.
- **Alarm Sound Set**: allows you to select the alarm melody.

3. Press the **OK** soft key.
4. Select **AM** or **PM** for 12-hour format and press the **Select** soft key.
5. If you select **Morning Call** in step 1, choose the repeat option, **Monday to Friday** or **Monday to Saturday**, and press the **Select** soft key.

To stop the alarm when it rings, press the **Exit** soft key.

Remove Alarm: deactivates all alarm settings.

Autopower: when this option is set to **Enable**, the alarm rings at the specified time, even if the phone is switched off.

If the option is set to **Disable** and the phone is switched off at the specified time, the alarm does not ring.

Calendar *(Menu 7.2)*

With the Calendar feature, you can:

- consult the calendar to check your memos.
- write memos to keep track of your schedule.
- set an alarm to act as a reminder, if necessary.

Consulting the Calendar

When you select the **Calendar** menu (**Menu 7.2**), the calendar displays with today's date highlighted. The following options are available when you press the **Options** soft key:

Search All: displays all of the memos, starting with the oldest regardless of the day. To scroll through the memos, press the Up or Down key.

Delete All: allows you to delete all of the memos. You are asked to confirm your action.

Go to Date: allows you to go to a specific date.

Exit: exits the Calendar feature and returns to Idle mode.

Writing a Memo

You can make up to 30 memos for one day.

To write or edit a memo on a specific date:

1. Select a date on the calendar, using the navigation keys.

   Note: To skip to the previous or next month, press the Volume keys.

2. Press the **Select** soft key.

   An empty memo screen displays allowing you to enter your memo.

3. Enter your memo and then press the **OK** soft key.

   Note: For further details about how to enter characters, see page 43.

   You are asked if you wish to set an alarm.

4. If you want an alarm to ring on the chosen day, press the **Yes** soft key.

   Otherwise, press the **No** soft key. The memo is saved.

5. If you pressed the **Yes** soft key, enter the time for the alarm and press the **OK** soft key.

   Note: Your phone is preset to use 12-hour format. To change the format, see page 103.

   You can also select the melody for the alarm by pressing the **Melody** soft key.

6. Select **AM** or **PM** for 12-hour format and press the **Select** soft key.

The color of the date on the calendar changes to green to indicate that a memo exists for that date.

Viewing a Memo

When you select a day for which a memo already exists on the calendar, the latest memo for the day displays.

If more than one memo is stored, press the Up or Down key to scroll to the previous or next memo.

Press the **New** soft key to add a new memo for the day.

You can use the following options by pressing the **Options** soft key:

Edit: allows you to change the memo text.

Alarm: allows you to set an alarm to ring at a specified time to remind you of the memo. If you set the alarm earlier, you can change or delete it.

Delete: allows you to delete the memo.

Copy to: allows you to copy the memo to another date.

Move to: allows you to change the date of the memo.

Time & Date *(Menu 7.3)*

This menu allows you to change the current time and date displayed. You can also find out what time it is in another part of the world.

The following options are available:

Set Time: allows you to enter the current time. You can choose the time format in the **Time Format** menu (**Menu 7.3.4**). See the following page.

Note: Before setting the time, you must specify your time zone in the **World Time** menu (**Menu 7.3.3**).

Set Date: allows you to enter the day, month and year.

World Time: allows you to find out what time it is in another part of the world, using the Left and Right keys.

The screen shows the:

- city name.
- current time and date.
- time difference between the selected city and your city if you have set the local time; see below for further details.
- city selected as your time zone.

To select your time zone:

1. Select the city corresponding to your time zone by pressing the Left or Right key one or more times.

   The local time and date display.

2. Press the **Set** soft key.

Time Format: allows you to change the time format to **24 Hours** or **12 Hours**.

Calculator *(Menu 7.4)*

With this feature, you can use the phone as a calculator. The calculator provides basic arithmetic functions; addition, subtraction, multiplication and division.

1. Enter the first number using the numeric keys.

   Notes:
   - To delete mistakes or clear the display, press the **C** key.
   - To include a decimal point or a bracket, press the left soft key until the symbol you want displays.

2. Press the right soft key until the arithmetic symbol you want appears: **+** (addition), **-** (subtraction), ***** (multiplication), **/** (division).
3. Enter the second number.
4. To view the result, press the key.
5. Repeat steps 1 to 4 as many times as required.

To Do List *(Menu 7.5)*

This feature allows you to:

- enter a list of tasks to be done.
- assign a priority and a deadline to each task.
- sort the tasks by priority and status mark.

Creating the To Do List

1. Press the **New** soft key.
2. Enter the first task.

   Note: For further details about how to enter characters, see page 43.

3. Press the **OK** soft key.

4. Select a priority status of high, normal or low using the Up and Down keys and press the **Select** soft key.

5. Enter your deadline and press the **OK** soft key.

   If you do not want to set a deadline, press the **Skip** soft key.

Editing the To Do List

When you select the **To Do List** menu (**Menu 7.5**), the current contents display with the status mark, if the task has been done, and priority; for High, for Normal and for Low.

Action	Procedure
View the details for a specific task	① Highlight the task. ② Press the **View** soft key. ③ Scroll through the tasks using the Up and Down keys, if necessary.
Change the status of a specific task	① Highlight the task. ② Press the * key to mark the task as completed as of the current time and date. or ① Highlight the task. ② Press the **Options** soft key. ③ Select the **Mark** option. ④ Select the appropriate status (**Done** or **Undo**).
Create a new task	① Press the **Options** soft key. ② Select the **New** option. ③ Enter the text, priority and/or deadline for the task.

Action	Procedure
Edit an existing task	① Highlight the task. ② Press the **Options** soft key. ③ Select the **Edit** option. ④ Change the text, priority and/or deadline for the task.
Sort the existing tasks by priority or status	① Press the **Options** soft key. ② Select the **Sort** option. ③ Select the sort criterion (**High**, **Low**, **Done** or **Undo**).
Copy a task	① Highlight the task. ② Press the **Options** soft key. ③ Select the **Copy** option. ④ Change the text, priority and/or deadline for the task.
Copy a task to the calendar	① Highlight the task. ② Press the **Options** soft key. ③ Select the **Copy to Calendar** option. ④ Change the text and deadline for the task and set the alarm.
Delete a task	① Highlight the task. ② Press the **Options** soft key. ③ Select the **Delete** option.
Delete all tasks	① Press the **Options** soft key. ② Select the **Delete All** option. ③ Confirm the deletion by pressing the **OK** soft key.
Exit the To Do list	① Press the **Options** soft key. ② Select the **Exit** option.

Voice Memo *(Menu 7.6)*

You can record voice memos. After recording, you can send a memo to other people using the Multimedia Message Service.

Record *(Menu 7.6.1)*

This menu allows you to record a new memo. When you select this option, the display shows the 30-second timer.

1. To start recording, press the **Record** soft key.
2. Record a memo by speaking into the microphone.
3. When you press the **Stop** soft key or if the recording time expires, the following options display:
   - **Replay**: plays back your memo.
   - **Re-record**: discards the memo and enables you to record another one.
   - **Save**: allows you to save the memo.
   - **Quit**: cancels your recording and exits the **Record** menu.
4. To save the memo, choose **Save** from the options and press the **Select** soft key.
5. Press the **C** key to clear the default name, if necessary, and enter a name for the memo.

   For further details about how to enter characters, see page 43.
6. Press the **OK** soft key.

   The memo is saved and then the display shows the memo information.
7. Press the **Options** soft key to use the following memo options:

- **Send**: allows you to send the memo to other people by using the MMS feature. Follow the procedure on page 75.
- **Rename**: allows you to change the memo's name.
- **Delete**: deletes the memo.

8. To exit, press the **C** or key.

Memo List *(Menu 7.6.2)*

This menu shows your voice memo list. Scroll to a memo and press the **Options** soft key. The following options are available:

Play: plays the memo.

Send: allows you to send the memo to other people by using the MMS feature. See page 75 for further details about sending a message.

Rename: allows you to change the memo's name.

Information: displays information about the memo, such as the name, date when the memo was made, recording duration and memory size.

Delete: deletes the memo.

Delete All *(Menu 7.6.3)*

This menu, you can delete all of your voice memos.

When the confirming message appears, press the **Yes** soft key. To cancel the deletion, press the **No** soft key.

Memory Status *(Menu 7.6.4)*

This menu displays the memory used and available for the organizer.

Currency Exchange *(Menu 7.7)*

Using this menu, you can figure out currency conversions.

1. Enter the current exchange rate of your source currency and press the **OK** soft key.

   You can insert a decimal point by pressing the # key.

2. Enter the amount to convert and press the **OK** soft key.

   The amount you entered and its equivalent value display.

3. Press the **Exit** soft key to exit the currency convertor.

Network Services

These menu functions are network services. Please contact your service provider to check their availability and subscribe to them, if you wish.

Call Forwarding *(Menu 8.1)*

This network service enables incoming calls to be rerouted to the number that you specify.

Example: You may wish to forward your business calls to a colleague while you are on holidays.

You can use the following options to forward voice calls and/or data calls:

Forward Always: all calls are forwarded.

Busy: calls are forwarded when you are already on another call.

No Reply: calls are forwarded when you do not answer the phone.

Unreachable: calls are forwarded when you are not in an area covered by your service provider.

Cancel All: all call forwarding options are canceled.

To set your call forwarding options:

1. Select a call forwarding option by pressing the Up or Down key, and then press the **Select** soft key.
2. Select the type of calls, voice or data, by pressing the Up or Down key, and then press the **Select** soft key.

   The current status displays. If the option has already been set, the number to which the calls are forwarded displays.

3.

To	Press the
activate call forwarding	**Activate** soft key. Go to step 4.
change the number to be called	**Change** soft key. Go to step 4.
deactivate call forwarding	**Remove** soft key.

4. Enter the number to which the calls are to be forwarded and press the **OK** soft key.

   To enter an international code, press the **0** key until the **+** sign displays.

   The phone sends your settings to the network and the network's acknowledgement displays.

You can deactivate all call forwarding settings by selecting the **Cancel All** option.

Call Waiting *(Menu 8.2)*

This network service informs you when someone is trying to reach you during another call.

You can specify individual call waiting options for voice calls and/or data calls.

To set your call waiting options:

1. Select the type of calls, voice or data, to which you want to apply the call waiting option by pressing the Up or Down key, and then press the **Select** soft key.

   The screen informs you whether call waiting is activated or deactivated.

2. You can activate or deactivate the call waiting feature as necessary by using the **Activate** or **Deactivate** soft key respectively.

   To return to the previous screen, press the **Exit** soft key.

You can also deactivate all call waiting settings by selecting the **Cancel All** option.

Network Selection *(Menu 8.3)*

The Network Selection feature enables you to automatically or manually select the network used when roaming outside of your home area.

Note: You can select a network other than your home network only if there is a valid roaming agreement between them.

To indicate to automatically or manually select the network when roaming:

1. When **Network Selection** displays, press the **Select** soft key.

2. Press the Up or Down key until the appropriate option highlights and then press the **OK** soft key.

   If you select **Automatic**, you are connected to the first available network when roaming.

   If you select **Manual**, the phone scans for the available networks. Go to step 3.

3. Press the Up or Down key until the network you want highlights and then press the **OK** soft key.

   You are connected to that network.

Caller ID *(Menu 8.4)*

You can prevent your phone number from being displayed on the phone of the person being called.

Note: Some networks do not allow the user to change this setting.

The following options are available:

Default: the default setting provided by the network is used.

Hide Number: your number does not display on the other person's phone.

Send Number: your number is sent each time you make a call.

Funbox

The **Funbox** menu contains several fun options.

t-Zones *(Menu 9.1)*

Your phone is equipped with a WAP (Wireless Application Protocol) browser to allow you to access and navigate the Wireless Web using your phone.

Home *(Menu 9.1.1)*

Selecting this menu connects the phone to the network and loads the homepage of the Wireless Web service provider. You can also press the key in Idle mode.

The content of the WAP Browser startup homepage depends on your Wireless Web service provider. To scroll through the screen, use the Up and Down keys.

Note: To access the startup homepage from any other screen in the WAP browser, use the **Home** option. For further details about the WAP Browser menus, see page 117.

Exiting the WAP Browser

To exit the browser at any time, simply press the key.

Navigating the WAP Browser

To	Press the
scroll through and select browser items	Up or Down key until the symbol ▶ points to the item, and then press the **Select** soft key to confirm the selection.
select a numbered item	corresponding numeric key.
return to the previous page	**Back** soft key or the **C** key.
return to the startup homepage	✳ key for more than two seconds and select the **Home** option. For further details about this option, see page 117.

Entering Text in the WAP Browser

When you are prompted to enter text, the current text input mode is indicated on the screen.

The following modes are available:

Upper-case Character mode (**A**): allows you to enter upper-case English characters.

Lower-case Character mode (**a**): allows you to enter lower-case English characters.

Note: You can also enter special characters in Upper-case or Lower-case Character mode. For details about available characters, see page 47.

T9 mode (**T9**): allows you to enter English characters by pressing one key per letter. In this mode, you can use only the **0** key to display alternative words. To change the case, press the ✳ key.

Number mode (**1**): allows you to enter numbers.

To change the text input mode	Press the key one or more times.
To enter a space	Press the # key.
To edit text	① Set the cursor to the right of the character(s) to be corrected. ② Press the **C** key as required. ③ Enter the correct character(s).

Selecting and Using Browser Menu Options

Various menu options are available when you are using the WAP Browser to navigate the Wireless Web.

To access a menu option:

1. Press and hold the * key.

   A menu list displays.

2. Highlight a menu by pressing the Up or Down key.
3. Select an option by pressing the **Select** soft key.
4. If necessary, select a secondary option using the Up and Down keys, and press the **Select** soft key to confirm.

Note: The menus may vary, depending on your version of the WAP browser.

The following options are available:

Reload: reloads the current page.

Home: takes you back at any time to the home page of the Wireless Web service provider.

Go to URL: allows you to manually enter the URL address of a Web page. After entering an address, press the **OK** soft key to go there directly.

Show URL: displays the URL address of the Web page to which you are currently connected to. It also enables you to set the current site as the startup home page.

To	Press the
set the current page as your startup home page	**Option** soft key, select the **Save to Home** option.
set a bookmark for the current page	**Option** soft key, select the **Save to Bookmark** option.
cancel your setting	**Back** soft key.

Edit Home: allows you to change the startup home page manually. Enter the URL and press the **OK** soft key. For further details about entering text, see page 43.

Clear Cache: deletes the information stored in the cache, which stores the most recently accessed Web pages.

Inbox: allows you to read messages received from the web server.

Favorite *(Menu 9.1.2)*

This menu allows you to store the URL addresses of up to ten of your favorite web sites. You can access this menu directly by pressing and holding the # key while using the WAP browser.

To store a URL address:

1. Select an empty location and press the **Select** soft key.
2. Enter the address and press the **Enter** soft key.

   For further details about how to enter characters, see page 43.

3. Enter a name for the favorite item and press the **Enter** soft key.

After saving favorite items, you can use the following options by pressing the **Select** soft key:

Goto URL: takes you to the site.

Edit: allows you to edit the address.

Delete: deletes the address.

Go To URL *(Menu 9.1.3)*

This menu allows you to manually enter the URL address of the Web site that you wish to access.

For further details about how to enter characters, see page 43.

Clear Cache *(Menu 9.1.4)*

You can clear the information stored in the cache, the phone's temporary memory which stores the most recently accessed Web pages.

Press the **Yes** soft key to confirm the deletion. Otherwise, press the **No** soft key.

Push Message *(Menu 9.1.5)*

In this menu, you can receive and access web messages from the server.

The following options are available:

Inbox: allows you to read the messages received from the web server.

Receive: allows you to set whether or not your phone receives web messages.

Delete All: allows you to delete all of the web messages.

Games *(Menu 9.2)*

You can download MIDlets (Java applications running on mobile phones) from various sources using the WAP Browser and store them in your phone.

When you access the **Games** menu, the list of the default games appears.

Using the **New Games** option, you can access the web site provided by your service provider and download new games. Once you have downloaded games, they are added to the list.

Note: Java services may not be available depending upon the service provider.

Launching a MIDlet

Note: The procedure explained below is for the default games. For downloaded games, the procedure may be different.

1. Scroll to the MIDlet you want on the Games list and press the **Launch** soft key.
2. On the startup screen of the MIDlet, scroll to an option using the Navigation keys.

   The following options are available:

   - **START GAME**: starts a new game.
   - **CONTINUE**: allows you to continue the last game you played.

- **HIGH SCORE**: shows the high score table. This option may not be available for some games.
- **HOW TO PLAY**: shows how to play the game and the key functions for the game.
- **OPTION**: allows you to switch the game sound on or off.

3. Press the key to confirm your selection.

While you are playing a game, to	Press the
adjust the sound volume	Volume keys
stop the game and return to the startup screen	**C** key.
exit the game	key.

Viewing MIDlet Information

1. Scroll to the MIDlet you want and press the **Info** soft key.

   The display shows information about the MIDlet, such as the file size, application version and its vendor.

2. To scroll to other MIDlet information, press the Navigation keys.
3. If you want to delete the MIDlet, press the **Delete** soft key and then press the **Yes** soft key to confirm the deletion.
4. To exit and return to the Games screen, press the **Back** soft key or the **C** key.

Note: When you select the default games from the list, the **Delete** option is not available, so that you cannot delete them.

Entering Text

If you need to enter text while using a MIDlet, you can use the following input modes:

Upper-case Character mode (**A**): allows you to enter upper-case English characters.

Lower-case Character mode (**a**): allows you to enter lower-case English characters.

Number mode (**1**): allows you to enter numbers.

Symbol mode: allows you to enter symbols, After highlighting a symbol by pressing the Navigaition keys, press the ⓪ key to insert it.

T9 mode (**T9**): allows you to enter English characters by pressing one key per letter. In this mode, you can change the case by pressing the **0** key.

To change the text input mode, press the * key until the appropriate indicator appears.

Sounds *(Menu 9.3)*

In this menu, you can view the list of sounds downloaded from the web server or received in multimedia messages. You can set the downloaded sounds as the current ring tone or send them to other phones.

Press the **Options** soft key to use the following options:

Rename: allows you to change the name of the sound.

Delete: deletes the sound.

Set as Ring Tone: sets the sound as your ring tone.

Using the **New MegaTones** option on the sounds list, you can access the web site provided by your service provider and download new sounds.

Images *(Menu 9.4)*

In this menu, you can view the list of pictures downloaded from the web server or received in messages. If you set a TV capture image as the wallpaper in the **TV Image** menu (**Menu 4.2**), it displays as My Photo.icn on the list.

You can set the downloaded pictures as the current background image or send them to other phones.

By pressing the **Options** soft key, you can use the following options:

Rename: allows you to change the name of the image.

Delete: deletes the image.

Set as Wallpaper: sets the image as your wallpaper for the idle screen.

Using the **New Wallpapers** option on the images list, you can access the web site provided by your service provider and download new images.

Delete All *(Menu 9.5)*

This menu allows you to delete all of the downloaded items in the Games, Sounds and Images folders. You can delete all of the items at one time.

To	Press the
select a folder to clear	Up or Down key. To delete all of your items, select **All**.
place a check mark	**Mark** soft key.
remove a check mark	**Unmark** soft key.
delete the marked items	**Delete** soft key.

When a confirming message displays, press the **Yes** soft key to confirm.

Memory Status *(Menu 9.6)*

You can check the amount of the memory being used and the memory remaining for games, sounds and images.

Games: the display shows the total, free and used space and the number of the games you downloaded.

Sounds & Images: the display shows the total, used and free space, including the memory status used by sounds and images.

Solving Problems

If you are experiencing problems with your phone, perform the following simple checks before contacting a service professional. This may save you the time and expense of an unnecessary service call.

When you switch your phone on, the following messages may appear:

Insert SIM Card

- Check that the SIM card is correctly installed.

Phone Locked Enter Password

- The automatic locking function has been enabled. You must enter the phone's password before you can use the phone.

Enter PIN

- You are using your phone for the first time. You must enter the Personal Identification Number (PIN) supplied with the SIM card.
- The PIN Check feature is enabled. Every time the phone is switched on, the PIN has to be entered. To disable this feature, use the **PIN Check** menu (**Menu 6.6.1**).

Enter PUK

- The PIN code was entered incorrectly three times in succession and the phone is now blocked. Enter the PUK supplied by your service provider.

“No service,” “Network failure” or “Not done” displays

- The network connection was lost. You may be in a weak signal area (in a tunnel or surrounded by buildings). Move and try again.
- You are trying to access an option for which you have not taken out a subscription with your service provider. Contact the service provider for further details.

You have entered a number but it was not dialed

- Have you pressed the key?
- Are you accessing the right cellular network?

Your correspondent cannot reach you

- Is your phone switched on (the key pressed for more than one second)?
- Are you accessing the right cellular network?

Your correspondent cannot hear you speaking

- Have you switched off the microphone?
- Are you holding the phone close enough to your mouth? The microphone is located at the bottom of the phone.

The phone starts beeping and “**Warning** Low Battery” flashes on the display

- Your battery is insufficiently charged. Recharge the battery.

The audio quality of the call is poor

- Check the signal strength indicator on the display (); the number of bars indicates the signal strength from strong () to weak ().
- Try moving the phone slightly or moving closer to a window if you are in a building.

No number is dialed when you recall a Phonebook entry

- Check that the number has been stored correctly, by using the Phonebook Search feature.
- Re-store the number, if necessary.

If the above guidelines do not help you to solve the problem, take note of:
• the model and serial numbers of your phone
• your warranty details
• a clear description of the problem

Then contact your local dealer or Samsung after-sales service.

Health and Safety Information

Usage guidelines: All about performance and safety

Getting the Most Out of Your Reception

The quality of each call you make or receive depends on the signal strength in your area. Your phone informs you of the current signal strength by displaying a number of bars next to the signal strength icon. The more bars displayed, the stronger the signal.

If you're inside a building, being near a window may give you better reception.

Understanding the Power Save Feature

If your phone is unable to find a signal after 15 minutes of searching, a Power Save feature is automatically activated. If your phone is active, it periodically rechecks service availability or you can check it yourself by pressing any key. Anytime the Power Save feature is activated, a message displays on the screen. When a signal is found, your phone returns to standby mode.

Understanding How Your Phone Operates

Your phone is basically a radio transmitter and receiver. When it's turned on, it receives and transmits radio frequency (RF) signals. When you use your phone, the system handling your call controls the power level. This power can range from 0.006 watts to 0.2 watts in digital mode.

Knowing Radio Frequency Safety

The design of your phone complies with updated NCRP standards described below.

In 1991-92, the Institute of Electrical and Electronics Engineers (IEEE) and the American National Standards Institute (ANSI) joined in updating ANSI's 1982 standard for safety levels with respect to human exposure to RF signals. More than 120 scientists, engineers and physicians from universities, government health agencies and industries developed this updated standard after reviewing the available body of research. In 1993, the Federal Communications Commission (FCC) adopted this updated standard in a regulation. In August 1996, the FCC adopted hybrid standard consisting of the existing ANSI/IEEE standard and the guidelines published by the National Council of Radiation Protection and Measurements (NCRP).

Maintaining Your Phone's Peak Performance

Note: For the best care of your phone, only authorized personnel should service your phone and accessories. Faulty service may void the warranty.

There are several simple guidelines to operating your phone properly and maintaining safe, satisfactory service.

- Hold the phone with the antenna raised, fully-extended and over your shoulder.
- Try not to hold, bend or twist the phone's antenna.
- Don't use the phone if the antenna is damaged.
- Speak directly into the phone's receiver.

Maintaining Safe Use of and Access to Your Phone

FAILURE TO FOLLOW THE INSTRUCTIONS OUTLINED MAY LEAD TO SERIOUS PERSONAL INJURY AND POSSIBLE PROPERTY DAMAGE

IMPORTANT SAFETY INSTRUCTIONS - SAVE THESE INSTRUCTIONS.

DANGER - TO REDUCE THE RISK OF FIRE OR ELECTRIC SHOCK, CAREFULLY FOLLOW THESE INSTRUCTIONS.

FOR CONNECTION TO A SUPPLY NOT IN THE U.S.A., USE AN ATTACHMENT PLUG ADAPTOR OF THE PROPER CONFIGURATION FOR THE POWER OUTLET.

Using Your Phone While Driving

Talking on your phone while driving is illegal in some states. Even where it's not, it can divert your attention from driving. Remember that safety always comes first.

When using your phone in the car:

- Get to know your phone and its features, such as speed dial and redial.
- When available, use a hands-free device.
- Position your phone within easy reach.
- Let the person you are speaking to know you are driving; if necessary, suspend the call in heavy traffic or hazardous weather conditions.
- Do not take notes or look up phone numbers while driving.
- Dial sensibly and assess the traffic; if possible, place calls when you stationary or before pulling into traffic.
- Do not engage in stressful or emotional conversations that may divert your attention from the road.
- Dial **9**,**1**,**1** to report serious emergencies. It's free from your wireless phone.

- Use your phone to help others in emergencies.
- Call special non-emergency wireless number when necessary.

Following Safety Guidelines

Note: Always turn off the phone in health care facilities and request permission before using the phone near medical equipment.

To operate your phone safely and efficiently, always follow any special regulations in a given area. Turn your phone off in areas where use is forbidden or when it may cause interference or danger.

Using Your Phone Near Other Electronic Devices

Most modern electronic equipment is shielded from radio frequency (RF) signals. However, RF signals from wireless phones may affect inadequately shielded electronic equipment.

RF signals may affect improperly installed or inadequately shielded electronic operating systems and/or entertainment systems in motor vehicles. Check with the manufacturer or their representative to determine if these systems are adequately shielded from external RF signals. Also check with the manufacturer regarding any equipment that has been added to your vehicle.

Consult the manufacturer of any personal medical devices, such as pacemakers and hearing aids, to determine if they are adequately shielded from external RF signals.

Turning Off Your Phone Before Flying

Turn off your phone before boarding any aircraft. To prevent possible interference with aircraft systems, the U.S. Federal Aviation Administration (FAA) regulations require you to have permission from a crew member to use your phone while the

plane is on the ground. To prevent any risk of interference, FCC regulations prohibit using your phone while the plane is in the air.

Turning Off Your Phone in Dangerous Areas

To avoid interfering with blasting operations, turn off your phone when in a blasting area or in other areas with signs indicating that two-way radios should be turned off. Construction crews often use remote-control RF devices to set off explosives.

Note: Never transport or store flammable gas, liquid or explosives in the compartment of your vehicle that contains your phone or accessories.

Turn off your phone when you're in any area that has a potentially explosive atmosphere. Although it's rare, your phone or its accessories could generate sparks. Sparks could cause an explosion or a fire resulting in bodily injury or even death. These areas are often, but not always, clearly marked. They include:

- Fueling areas such as gas stations.
- Below deck on boats.
- Fuel or chemical transfer or storage facilities.
- Areas where the air contains chemicals or particles such as grain, dust or metal powders.
- Any other area where you would normally be advised to turn off your vehicle's engine.

Restricting Children's Access to your Phone

Your phone is not a toy. Children should not be allowed to play with it because they could hurt themselves and others, damage the phone or make calls that increase your phone bill.

Caring for the Battery

The guidelines listed below help you get the most out of your battery's performance.

- Use only Samsung-approved batteries and desktop chargers. These chargers are designed to maximize battery life. Using other batteries or chargers voids your warranty and may cause damage.
- In order to avoid damage, charge the battery only in temperatures that range from 32º F to 104º F (0º C to 40º C).
- Don't use the battery charger in direct sunlight or in high humidity areas, such as the bathroom.
- Never dispose of the battery by incineration.
- Keep the metal contacts on top of the battery clean.
- Don't attempt to disassemble or short-circuit the battery.
- The battery may need recharging if it has not been used for a long period of time.
- It's best to replace the battery when it no longer provides acceptable performance. It can be recharged hundreds of times before it needs replacing.

Don't store the battery in high temperature areas for long periods of time. It's best to follow these storage rules:
Less than one month
32º F to 104º F (0º C to 40º C)

Disposal of Lithium Ion (Li-Ion) Batteries

For safe disposal options of your Li-Ion batteries, contact your nearest Samsung-authorized service center.

- For safety, do not handle a damaged or leaking Li-Ion battery.
- Be sure to dispose of your battery properly. In some areas, the disposal of batteries in household or business trash may be prohibited.

Acknowledging Special Precautions and FCC

FCC Notice

The phone may cause TV or radio interference if used in close proximity to receiving equipment. The FCC can require you to stop using the phone if such interference cannot be eliminated.

Vehicles using liquefied petroleum gas (such as propane or butane) must comply with the National Fire Protection Standard (NFPA-58). For a copy of this standard, contact the National Fire Protection Association, One Batterymarch Park, Quincy, MA 02269, Attn: Publication Sales Division.

Cautions

Any changes or modifications to your phone not expressly approved in this document could void your warranty for this equipment, and void your authority to operate this equipment. Only use approved batteries, antennas and chargers. The use of any unauthorized accessories may be dangerous and void the phone warranty if said accessories cause damage or a defect to the phone.

Although your phone is quite sturdy, it is a complex piece of equipment and can be broken. Avoid dropping, hitting, bending or sitting on it.

Body-Worn Operation

SAR compliance for body-worn operating configurations is limited to the specific belt-clip/ holster supplied or approved by Samsung, if available. End-users must be informed of the body-worn operating requirements for satisfying RF exposure compliance. The use of accessories that do not satisfy these requirements may not comply with FCC RF exposure

compliance and should be avoided.

For more information about RF exposure, please visit the FCC website at www.fcc.gov.

SAR Values

- Head: 0.942 (W/kg)
- Body-worn: 0.202 (W/kg)

FDA Consumer Update

Do wireless phones pose a health hazard?

The available scientific evidence does not show that any health problems are associated with using wireless phones. There is no proof, however, that wireless phones are absolutely safe. Wireless phones emit low levels of radio frequency energy (RF) in the microwave range while being used. They also emit very low levels of RF when in stand-by mode. Whereas high levels of RF can produce health effects (by heating tissue), exposure to low level RF that does not produce heating effects causes no known adverse health effects. Many studies of low level RF exposures have not found any biological effects. Some studies have suggested that some biological effects may occur, but such findings have not been confirmed by additional research. In some cases, other researchers have had difficulty in reproducing those studies, or in determining the reasons for inconsistent results.

What is FDA's role concerning the safety of wireless phones?

Under the law, FDA does not review the safety of radiation-emitting consumer products such as wireless phones before they can be sold, as it does with new drugs or medical devices.

However, the agency has authority to take action if wireless phones are shown to emit radio frequency energy (RF) at a level that is hazardous to the user. In such a case, FDA could require the manufacturers of wireless phones to notify users of the health hazard and to repair, replace or recall the phones so that the hazard no longer exists.

Although the existing scientific data do not justify FDA regulatory actions, FDA has urged the wireless phone industry to take a number of steps, including the following:

- Support needed research into possible biological effects of RF of the type emitted by wireless phones;
- Design wireless phones in a way that minimizes any RF exposure to the user that it is not necessary for device function; and
- Cooperate in providing users of wireless phones with the best possible information on possible effects of wireless phone use on human health.

FDA belongs to a interagency working group of the federal agencies that have responsibility for different aspects of RF safety to ensure coordinated efforts at the federal level. The following agencies belong to this working group:

- National Institute for Occupational Safety and Health
- Environmental Protection Agency
- Federal Communications Committee
- Occupational Safety and Health Administration

The National Institutes of Health participates in some interagency working group activities, as well.

FDA shares regulatory responsibilities about wireless phones with the Federal Communications Commission (FCC). All phones that are sold in the United States must comply with FCC safety guidelines that limit RF exposure. FCC relies on

FDA and other health agencies for safety questions about wireless phones.

FCC also regulates the base stations that the wireless phone networks rely upon. While these base stations operate at higher power than do the wireless phones themselves, the wireless exposures that people get from these base stations are typically thousands of times lower than those they get from wireless phones. Base stations are thus not the subject of the safety questions discussed in this document.

What kinds of phones are the subject of this update?

The term "wireless phones" refers here to hand-held wireless phones with built-in antennas, often called "cell," "mobile," or "PCS". These types of wireless phones can expose the user to measurable radio frequency energy (RF) because of the short distance between the phone and the user's head. These RF exposures are limited by Federal Communications Commission safety guidelines that were developed with the advice of FDA and other federal health and safety agencies. When the phone is located at greater distances from the user, the exposure to RF is drastically lower because a person's RF exposure decreases rapidly with increasing distance from the source. The so-called "cordless phones" which have a base unit connected to the phone wiring in a house, typically operate at far lower per levels, and thus produce RF exposures far below the FCC safety limits.

What are the results of the research done already?

The research done thus far has produced conflicting results, and many studies have suffered from flaws in their research methods. Animal experiments investigating the effects of radio frequency energy (RF) exposures characteristic of wireless phones have yielded conflicting results that often cannot be

repeated in other laboratories. A few animal studies, however, have suggested that low levels of RF could Accelerate the development of cancer in laboratory animals. However, many of the studies that showed increased tumor development used animals that had been genetically engineered or treated with cancer-causing chemicals so as to be pre-disposed to develop cancer in absence of RF exposure. Other studies exposed the animals to RF for up to 22 hours per day. These conditions are not similar to the conditions under which people use wireless phones, so we don't know with certainty what results of such studies mean for human health.

Three large epidemiology studies have been published since December 2000. Between them, the studies investigated any possible association between the use of wireless phones and primary brain cancer, glaucoma, meningioma, or acoustic neuroma, tumors of the brain or salivary gland, leukemia, or other cancers. None of the studies demonstrated the existence of any harmful health effects from wireless phones RF exposures. However, none of the studies can answer questions about long-term exposures, since average period of phone use in these studies was around three years.

What research is needed to decide whether RF exposure from wireless phones poses a health threat?

A combination of laboratory studies and epidemiological studies of people actually using wireless phones would provide some of the data that are needed. Lifetime animal exposure studies could be completed in a few years. However, very large numbers of animals would be needed to provide reliable proof of a cancer promoting effect if one exists. Epidemiological studies can provide data that is directly applicable to human populations, but ten or more years' follow-up may be needed to provide answers about some health effects, such as cancer. This is because the interval between the time of exposure to a

cancer-causing agent and the time tumors develop - if they do - may be many, many years. The interpretation of epidemiological studies is hampered by difficulties in measuring actual RF exposure during day-to-day use of wireless phones. Many factors affect this measurement, such as the angle at which the phone is held, or which model of phone is used.

What is FDA doing to find out more about the possible health effects of wireless phone RF?

FDA is working with the U.S. Toxicology Program and with groups of investigators around the world to ensure that high priority animal studies are conducted to address important questions about the effects of exposure to radio frequency energy (RF).

FDA has been a leading participant in the World Health Organization International Electromagnetic Fields (EMF) Project since its inception in 1996. An influential result of tis work has been the development of a detailed agenda of research needs that has driven the establishment of new research programs around the world. The project has also helped develop a series of public information documents on EMF issues.

FDA and the Cellular Telecommunications & Internet Association (CTIA) have a formal Cooperative Research and Development Agreement (CRADA) to do research on wireless phone safety. FDA provides the scientific oversight, obtaining input from experts in government, industry, and academic organizations. CTIA-funded research is conducted through contracts to independent investigators. The initial research will include both laboratory studies and studies of wireless phone users. The CRADA will also include a broad assessment of additional research needs in the context of the latest research developments around the world.

How can I find out how much radio frequency energy exposure I can get by using my wireless phone?

All phones sold in the United States must comply with Federal Communications Commission (FCC) guidelines that limit radio frequency energy (RF) exposures. FCC established these guidelines in consultation with FDA and other federal health and safety agencies. The FCC limit for exposure from wireless telephones is set at a Specific Absorption Rate (SAR) of 1.6 watts per kilogram (1.6 W/kg). The FCC limit is consistent with the safety standards developed by the Institute of Electrical and Electronic Engineering (IEEE) and the National Council on Radiation Protection and Measurement. The exposure limit takes into consideration the body's ability to remove heat from the tissue that absorb energy from the wireless phone and is set well below levels known to have effects.

Manufacturers of wireless phones must report the RF exposure level for each model of phone to the FCC. The FCC website (http://www.fcc.gov/oet/rfsafety) gives directions for locating the FCC identification number on your phone so you can find your phone's RF exposure level in the online listing.

What has FDA done to measure the radio frequency energy coming from wireless phones?

The Institute of Electrical and Electronic Engineers (IEEE) is developing a technical standard for measuring the radio frequency energy (RF) exposure from wireless phones and other wireless hand sets with the participation and leadership of FDA scientists and engineers. The standard, "Recommended Practice for Determining the Spatial-Peak Specific Absorption Rate (SAR) in the Human Body Due to Wireless Communications Devices: Experimental Techniques," sets forth the first consistent test methodology

for measuring the rate at which RF is deposited in the heads of wireless phone users. The test method uses a tissue-simulating model of the human head. Standardized SAR test methodology is expected to greatly improve the consistency of measurements made at different laboratories on the same phone. SAR is the measurement of the amount of energy absorbed in tissue, either by the whole body or a small part of the body. It is measured in watts/kg (or milliwatts/g) of matter. This measurement is used to determine whether a wireless phone complies with safety guidelines.

What steps can I take to reduce my exposure to radio frequency energy from my wireless phone?

If there is a risk from these products--and at this point we do not know that there is--it is probably very small. But if you are concerned about avoiding even potential risks, you can take a few simple steps to minimize your exposure to radio frequency energy (RF). Since time is a key factor in how much exposure a person receives, reducing the amount of time spent using a wireless phone will reduce RF exposure.

If you must conduct extended conversations by wireless phone every day, you could place more distance between your body and the source of the RF, since the exposure level drops off dramatically with distance. For example, you could use a headset and carry the wireless phone away from your body or use a wireless phone connected to a remote antenna.

Again, the scientific data do not demonstrate that wireless phones are harmful. But if you are concerned about RF exposure from these products, you can use measures like those described above to reduce your RF exposure from wireless phone use.

What about children using wireless phones?

The scientific evidence does not show a danger to users of wireless phones, including children and teenagers. If you want to take steps to lower exposure to radio frequency energy (RF), the measured described above would apply to children and teenagers using wireless phones. Reducing the time of wireless phone use and increasing the distance between the user and the RF source will reduce RF exposure.

Some groups sponsored by other national governments have advised that children be discouraged from using wireless phones at all. For example, the government in the United Kingdom distributed leaflets containing such a recommendation in December 2000. They noted that no evidence exists that using a wireless phone causes brain tumors or other ill effects. Their recommendation to limit wireless phone use by children was strictly precautionary; it was not based on scientific evidence that any health hazard exists.

What about wireless phone interference with medical equipment?

Radio frequency energy (RF) from wireless phones can interact with some electronic devices. For this reason, FDA helped develop a detailed test method to measure electromagnetic interference (EMI) of implanted cardiac pacemakers and defibrillators from wireless telephones. This test method is now part of a standard sponsored by the Association for the Advancement of Medical instrumentation (AAMI). The final draft, a joint effort by FDA, medical device manufacturers, and many other groups, was completed on late 2000. This standard will allow manufacturers to ensure that cardiac pacemakers and defibrillators are safe from wireless phone EMI.

FDA has tested hearing aids for interference from handheld wireless phones and helped develop a voluntary standard sponsored by the Institute of Electrical and Electronic Engineers

(IEEE). This standard specifies test methods and performance requirements for hearing aids and wireless phones so that no interference occurs when a person uses a "compatible" phone and a "compatible" hearing aid at the same time. This standard was approved by the IEEE in 2000.

FDA continues to monitor the use of wireless phones for possible interactions with other medical devices. Should harmful interference be found to occur, FDA will conduct testing to assess the interference and work to resolve the problem.

Where can I find additional information?

- For additional information, please refer to the following resources:
- FDA web page on wireless phones (http://www.fda.gov/cdrh/phones/index.html)
- Federal Communications Commission FCC) RF Safety Program (http://www.fda.gov/oet/rfsafety)
- International Commission on Non-Ionizing Radiation Protection (http://www.icnirp.de)
- World Health Organization (WHO) International EMF Project (http://www.who.int/emf)
- National Radiological Protection Board (UK) (http://www.nrpb.org.uk)

CTIA Safety Information

Exposure to radio frequency signals

Your wireless hand held portable telephone is a low power radio transmitter and receiver. When it is ON, it receives and also sends out radio frequency (RF) signals.

In August, 1996, the Federal Communications Commissions (FCC) adopted RF exposure guidelines with safety levels for hand-held wireless phones. Those guidelines are consistent with the safety standards previously set by both U.S. and international standard bodies:

- ANSI C95.1 (1992)
- NCRP Report 86 (1986)
- ICNIRP (1996)

Those standards were based on comprehensive and periodic evaluations of the relevant scientific literature. For example, over 120 scientists, engineers, and physicians from universities, government health agencies, and industry reviewed the available body of research to develop the ANSI Standard (C95.1).

The design of your phone complies with the FCC guidelines (and those standards).

Antenna care

Use only the specified of approved replacement antenna. Unauthorized antennas, modifications, or attachments could damage the phone and may violate FCC regulations.

Phone operation

NORMAL POSITION: Hold the phone as you would any other telephone with the antenna pointed up and over your shoulder.

Tips on efficient operation:

For your phone to operate most efficiently:

- Extend your antenna fully.
- Do not touch the antenna unnecessarily when the phone is in use. Contact with the antenna affects call quality and may

cause the phone to operate at a higher power level than otherwise needed.

Driving

Check the laws and regulations on the use of wireless telephones in the areas where you drive. Always obey them. Also, if using your phone while driving, please:

- Give full attention to driving--driving safety is your first responsibility.
- Use hands-free operation, if available.
- Pull off the road and park before making or answering a call if driving conditions so require.

Electronic devices

Most modern electronic equipment is shielded from RF signals. However, certain electronic equipment may not be shielded against RF signals from your wireless phone.

Pacemakers

The Health Industry Manufacturers Association recommends that a minimum separation of six (6”) inches be maintained between a hand-held wireless phone and a pacemaker to avoid potential interference with the pacemaker. These recommendations are consistent with the independent research by and recommendations of Wireless Technology Research.

Persons with pacemakers:

- Should ALWAYS keep the phone more than six inches from their pacemaker when the pacemaker is turned on;
- Should not carry the phone in a breast pocket;
- Should use the ear opposite the pacemaker to minimize the potential for interference.

- If you have any reason to suspect that interference is taking place, turn your phone OFF immediately.

Hearing aids

Some digital wireless phones may interfere with some hearing aids. In the event of such interference, you may want to consult your service provider (or call the customer service line to discuss alternatives.) Optional for each phone manufacturer.

Other medical devices

If you use any other personal medical device, consult the manufacturer of your device to determine if they are adequately shielded from external RF energy. Your physician may be able to assist you in obtaining this information.

Turn your phone OFF in health care facilities when any regulations posted in these areas instruct you to do so. Hospitals or health care facilities may be using equipment that could be sensitive to external RF energy.

Vehicles

RF signals may affect improperly installed or inadequately shielded electronic systems in motor vehicles. Check with the manufacturer or its representative regarding your vehicle. You should also consult the manufacturer of any equipment that has been added to your vehicle.

Posted facilities

Turn your phone OFF in any facility where posted notices so require.

Aircraft

FCC regulations prohibit using your phone while in the air. Switch OFF your phone before boarding an aircraft.

Blasting areas

To avoid interfering with blasting operations, turn your phone OFF when in a “blasting area” or in areas posted: “Turn off two-way radio”. Obey all signs and instructions.

Potentially explosive environments

Turn your phone OFF when in any area with a potentially explosive atmosphere and obey all signs and instructions. Sparks in such areas could cause an explosion or fire resulting in bodily injury of even death.

Areas with a potentially explosive atmosphere are often but not always clearly marked. They include fueling areas such as gasoline stations; below decks on boats; fuel or chemical transfer or storage facilities; vehicles using liquified petroleum gas (such as propane or butane); areas where the air contains chemicals or particles, such as grain, dust, or metal powders; and any other area where you would normally be advised to turn off your vehicle engine.

For vehicles equipped with an airbag

An airbag inflates with great force. DO NOT place objects, including both installed or portable wireless equipment, in the area over the air bag deployment area. If in-vehicle wireless equipment is improperly installed and the air bag inflates, serious injury could result.

Owner's Record

The model number, regulatory number and serial number are located on a nameplate inside the battery compartment. Record the serial number in the space provided below. This will be helpful if you need to contact us about your phone in the future.

Model: SGH-p705
Serial No.:

User Guide Proprietary Notice

T9 Text Input is licensed by Tegic Communications and is covered by U.S. Pat. 5,818,437, U.S. Pat. 5,953,541, U.S. Pat. 6,011,554 and other patents pending.

STANDARD LIMITED WARRANTY

What is Covered and For How Long? SAMSUNG TELECOMMUNICATIONS AMERICA, L.P. (SAMSUNG) warrants to the original purchaser ("Purchaser") that SAMSUNG's Phones and accessories ("Products") are free from defects in material and workmanship under normal use and service for the period commencing upon the date of purchase and continuing for the following specified period of time after that date:

Phone	1 Year
Batteries	1 Year
Leather Case/Pouch	90 Days
Holster	90 Days
Other Phone Accessories	1 Year

What is Not Covered? This Limited Warranty is conditioned upon proper use of Product by Purchaser. This Limited Warranty does not cover: (a) defects or damage resulting from accident, misuse, abuse, neglect, unusual physical, electrical or electromechanical stress, or modification of any part of Product, including antenna, or cosmetic damage; (b) equipment that has the serial number removed or made illegible; (c) any plastic surfaces or other externally exposed parts that are scratched or damaged due to normal use; (d) malfunctions resulting from the use of Product in conjunction with accessories, products, or ancillary/peripheral equipment not furnished or approved by SAMSUNG; (e) defects or damage from improper testing, operation, maintenance, installation, or adjustment; (f) installation, maintenance, and service of Product, or (g) Product used or purchased outside the United States or Canada.

This Limited Warranty covers batteries only if battery capacity falls below 80% of rated capacity or the battery leaks, and this Limited Warranty does not cover any battery if (i) the battery has been charged by a battery charger not specified or approved by SAMSUNG for charging the battery, (ii) any of the seals on the battery are broken or show evidence of tampering, or (iii) the battery has been used in equipment other than the SAMSUNG phone for which it is specified.

What are SAMSUNG's Obligations? During the applicable warranty period, SAMSUNG will repair or replace, at SAMSUNG's sole option, without charge to Purchaser, any defective component part of Product. To obtain service under this Limited Warranty, Purchaser must return Product to an authorized phone service facility in an adequate container for shipping, accompanied by Purchaser's sales receipt or comparable substitute proof of sale showing the date of purchase, the serial number of Product and the sellers' name and address. To obtain assistance on where to deliver the Product, call Samsung Customer Care at 1-888-987-4357. Upon receipt, SAMSUNG will promptly repair or replace the defective Product. SAMSUNG may, at SAMSUNG's sole option, use rebuilt, reconditioned, or new parts or components when repairing any Product or replace Product with a rebuilt, reconditioned or new Product. Repaired/replaced leather cases, pouches and holsters will be warranted for a period of ninety (90) days. All other repaired/replaced Product will be warranted for a period equal to the remainder of the original Limited Warranty on the original Product or for 90 days, whichever is longer. All replaced parts, components, boards and equipment shall become the property of SAMSUNG. If SAMSUNG determines that any Product is not covered by this Limited Warranty, Purchaser must pay all parts, shipping, and labor charges for the repair or return of such Product.

What Are the Limits On SAMSUNG's Liability? EXCEPT AS SET FORTH IN THE EXPRESS WARRANTY CONTAINED HEREIN, PURCHASER TAKES THE PRODUCT "AS IS," AND SAMSUNG MAKES NO WARRANTY OR REPRESENTATION AND THERE ARE NO CONDITIONS, EXPRESS OR IMPLIED, STATUTORY OR OTHERWISE, OF ANY KIND WHATSOEVER WITH RESPECT TO THE PRODUCT, INCLUDING BUT NOT LIMITED TO:

- THE MERCHANTABILITY OF THE PRODUCT OR ITS FITNESS FOR ANY PARTICULAR PURPOSE OR USE;
- WARRANTIES OF TITLE OR NON-INFRINGEMENT;
- DESIGN, CONDITION, QUALITY, OR PERFORMANCE OF THE PRODUCT;
- THE WORKMANSHIP OF THE PRODUCT OR THE COMPONENTS CONTAINED THEREIN; OR
- COMPLIANCE OF THE PRODUCT WITH THE REQUIREMENTS OF ANY LAW, RULE, SPECIFICATION OR CONTRACT PERTAINING THERETO.

NOTHING CONTAINED IN THE INSTRUCTION MANUAL SHALL BE CONSTRUED TO CREATE AN EXPRESS WARRANTY OF ANY KIND WHATSOEVER WITH RESPECT TO THE PRODUCT. ALL IMPLIED WARRANTIES AND CONDITIONS THAT MAY ARISE BY OPERATION OF LAW, INCLUDING IF APPLICABLE THE IMPLIED WARRANTIES OF MERCHANTABILITY AND FITNESS FOR A PARTICULAR PURPOSE, ARE HEREBY LIMITED TO THE SAME DURATION OF TIME AS THE EXPRESS WRITTEN WARRANTY STATED HEREIN. SOME STATES/PROVINCES DO NOT ALLOW LIMITATIONS ON HOW LONG AN IMPLIED WARRANTY LASTS, SO THE ABOVE LIMITATION MAY NOT APPLY TO YOU. IN ADDITION, SAMSUNG SHALL NOT BE LIABLE FOR ANY DAMAGES OF ANY KIND RESULTING FROM THE PURCHASE, USE, OR MISUSE OF, OR INABILITY TO USE THE PRODUCT OR ARISING DIRECTLY OR INDIRECTLY FROM THE USE OR LOSS OF USE OF THE PRODUCT OR FROM THE BREACH OF THE EXPRESS WARRANTY, INCLUDING INCIDENTAL, SPECIAL,

CONSEQUENTIAL OR SIMILAR DAMAGES, OR LOSS OF ANTICIPATED PROFITS OR BENEFITS, OR FOR DAMAGES ARISING FROM ANY TORT (INCLUDING NEGLIGENCE OR GROSS NEGLIGENCE) OR FAULT COMMITTED BY SAMSUNG, ITS AGENTS OR EMPLOYEES, OR FOR ANY BREACH OF CONTRACT OR FOR ANY CLAIM BROUGHT AGAINST PURCHASER BY ANY OTHER PARTY. SOME STATES/ PROVINCES DO NOT ALLOW THE EXCLUSION OR LIMITATION OF INCIDENTAL OR CONSEQUENTIAL DAMAGES, SO THE ABOVE LIMITATION OR EXCLUSION MAY NOT APPLY TO YOU.

THIS WARRANTY GIVES YOU SPECIFIC LEGAL RIGHTS, AND YOU MAY ALSO HAVE OTHER RIGHTS, WHICH VARY FROM STATE TO STATE/PROVINCE TO PROVINCE. THIS LIMITED WARRANTY SHALL NOT EXTEND TO ANYONE OTHER THAN THE ORIGINAL PURCHASER OF THIS PRODUCT AND STATES PURCHASER'S EXCLUSIVE REMEDY. IF ANY PORTION OF THIS LIMITED WARRANTY IS HELD ILLEGAL OR UNENFORCEABLE BY REASON OF ANY LAW, SUCH PARTIAL ILLEGALITY OR UNENFORCEABILITY SHALL NOT AFFECT THE ENFORCEABILITY FOR THE REMAINDER OF THIS LIMITED WARRANTY WHICH PURCHASER ACKNOWLEDGES IS AND WILL ALWAYS BE CONSTRUED TO BE LIMITED BY ITS TERMS OR AS LIMITED AS THE LAW PERMITS.

THE PARTIES UNDERSTAND THAT THE PURCHASER MAY USE THIRD-PARTY SOFTWARE OR EQUIPMENT IN CONJUNCTION WITH THE PRODUCT. SAMSUNG MAKES NO WARRANTIES OR REPRESENTATIONS AND THERE ARE NO CONDITIONS, EXPRESS OR IMPLIED, STATUTORY OR OTHERWISE, AS TO THE QUALITY, CAPABILITIES, OPERATIONS, PERFORMANCE OR SUITABILITY OF ANY THIRD-PARTY SOFTWARE OR EQUIPMENT, WHETHER SUCH THIRD-PARTY SOFTWARE OR EQUIPMENT IS INCLUDED WITH THE PRODUCT DISTRIBUTED BY SAMSUNG OR OTHERWISE, INCLUDING THE ABILITY TO INTEGRATE ANY SUCH SOFTWARE OR EQUIPMENT WITH THE

PRODUCT. THE QUALITY, CAPABILITIES, OPERATIONS, PERFORMANCE AND SUITABILITY OF ANY SUCH THIRD-PARTY SOFTWARE OR EQUIPMENT LIE SOLELY WITH THE PURCHASER AND THE DIRECT VENDOR, OWNER OR SUPPLIER OF SUCH THIRD-PARTY SOFTWARE OR EQUIPMENT, AS THE CASE MAY BE.

This Limited Warranty allocates risk of Product failure between Purchaser and SAMSUNG, and SAMSUNG's Product pricing reflects this allocation of risk and the limitations of liability contained in this Limited Warranty. The agents, employees, distributors, and dealers of SAMSUNG are not authorized to make modifications to this Limited Warranty, or make additional warranties binding on SAMSUNG. Accordingly, additional statements such as dealer advertising or presentation, whether oral or written, do not constitute warranties by SAMSUNG and should not be relied upon.

Samsung Telecommunications America, L.P.

1301 E. Lookout Drive

Richardson, Texas 75082

Phone: 1-800-SAMSUNG

Phone: 1-888-987-HELP (4357)

©2003 Samsung Telecommunications America. All rights reserved.

No reproduction in whole or in part allowed without prior written approval.

Specifications and availability subject to change without notice. [080802]

Glossary

To help you understand the main technical terms and abbreviations used in this booklet and to take full advantage of the features of your mobile phone, here are a few definitions:

Active Folder

Ability to answer a call simply by opening the folder.

Call Forwarding

Ability to reroute calls to another number.

Call Holding

Ability to put one call on standby while answering or making another call; you can then switch between the two calls, as required.

Call Waiting

Informs you that you have an incoming call when you are engaged on another call.

Caller Line Identification Services (Caller ID)

Services allowing subscribers to view or block the telephone numbers of callers.

Dual Band

Ability to handle any of the following types of network: GSM 850 and GSM 1900 MHz bands, for greater call success and wider roaming.

EMS (Enhanced Message Service)

An adaptation of the Short Message Service (SMS) that allows you to send and receive ring tones and the service provider's logo, as well as combinations of simple media to and from EMS-compliant handsets. Because EMS is based on SMS, it can use SMS centres the same way that SMS does. EMS works on all Global System for Mobile communications (GSM) networks. EMS senders can use text, melodies, pictures, sounds, and animations to enhance the expressive power of messages that are limited by the display constraints of mobile devices.

GPRS (General Packet Radio Service)

New non-voice value-added service that allows information to be sent and received across a mobile telephone network. GPRS provides continuous connection to the Internet for mobile phone and computer users. It is based on the Global System for Mobile Communication (GSM) circuit-switched cellular phone connections and the Short Message Service (SMS).

GSM (Global System for Mobile Communication)

International standard for cellular communication, guaranteeing compatibility between the various network operators. GSM covers most European countries and many other parts of the world.

Java

Programming language generating applications that can run on all hardware platforms, whether small, medium or large, without modification. It has been promoted for and geared heavily to the Web, both for public Web sites and Intranets. When a Java program runs from a Web page, it is called a

Java applet. When it is run on a mobile phone or pager, it is called a MIDlet.

MMS (Multimedia Message Service)

A message service for the mobile environment, standardized by the WAP Forum and the 3rd Generation Partnership Program (3GPP). For phone users, MMS is similar to Short Message Service (SMS)-it provides automatic, immediate delivery of user-created content from phone to phone. The message addressing used is primarily phone numbers, thus the traffic goes from phone to phone. MMS also provides support for e-mail addressing, so that messages can be sent by e-mail. In addition to the text content of SMS, MMS messages can contain still images, voice or audio clips, and also video clips and presentation information.

Multi-party Calling

Ability to establish a conference call involving up to five additional parties.

Phone Password

Security code used to unlock the phone when you have selected the option to lock it automatically each time it switches on.

PIN (Personal Identification Number)

Security code that protects the phone against unauthorized use. The PIN is supplied by the service provider with the SIM card. It may be a four to eight-digit number and can be changed, as required.

Proxy Server

A proxy server resides between a Web client, such as a web browser, and a real Web server and acts as an intermediary between them. When some people browse a web site, their

browser is not actually connecting to the web server. The request from their browser goes to a proxy server, and the proxy server makes the request to the web server. A proxy server can improve performance for groups of users because it cache the results of all requests for a certain amount of time. If a user requests a web page that it already loaded for another user, it reloads the page instead of forwarding the request to the Web server, which can be a time-consuming operation.

PUK (PIN Unblocking Key)

Security code used to unlock the phone when an incorrect PIN has been entered three times in succession. The eight-digit number is supplied by the service provider with the SIM card.

Roaming

Use of your phone when you are outside your home area (when travelling for example).

SIM (Subscriber Identification Module)

Card containing a chip with all the information required to operate the phone (network and memory information, as well as the subscriber's personal data). The SIM card fits into a small slot on the back of the phone and is protected by the battery.

SMS (Short Message Service)

Network service sending and receiving messages to and from another subscriber without having to speak to the correspondent. The message created or received can be displayed, received, edited or sent.

Soft Keys

Two keys marked and on the phone, the purpose of which:

- varies according to the function that you are currently using.
- is indicated on the bottom line of the display just above the corresponding key.

Voice Mail

Computerized answering service that automatically answers your calls when you are not available, plays a greeting (optionally in your own voice) and records a message.

Index

A
Access codes, 128
Active folder, 96
Alarm, 99
Alert type, 89
Alphabet mode, text input, 45
Answering
    call, 27
    second call, 52
Anykey answer, 97
Auto redial, 96
B
Background image, 93
Backlight
    description, 16
    time, 94
Battery
    caring, 133
    charging, 20
    installing, 20
    low indicator, 22
    removing, 18
Broadcast messages, 69
Browser, WAP, 115
C
Calculator, 104
Calendar memos
    copying, 102
    deleting, 102
    viewing, 102
    writing, 101
Call back, message, 63
Call cost, 85
Call records
    incoming, 82
    missed, 28, 82
    outgoing, 83
Call time, 84
Caller groups
    editing, 38
    searching, 37
Caller ID, 114
Calls
    answering, 27, 52

ending, 25
forwarding, 111
holding, 49
making, 25
redialing, 26
rejecting, 28
waiting, 52, 112
CB (Cell Broadcast) messages, 69
Characters, enter, 42
Charging battery, 20
Conference call, 53
Connect tone, 92
Currency exchange, 109
D
Dangerous Areas, 132
Date, set, 103
Deleting
calendar memos, 102
call records, 82
multimedia messages, 73, 74
phonebook, 36
task, 106
text messages, 62, 63
voice memos, 108
Delivery reports, message, 78
Display
backlight, 16
external, 16
icons, 15
layout, 13
settings, 93
DTMF tones, send, 51
E
Earpiece volume, 27
EMS (Enhanced Message Service), 62
Error tone, 91
External display,

16, 94
F
FCC Notice, 134
Flying, 131
Folder tone, 91
Forwarding
multimedia message, 73
Forwardting, calls, 111
Funbox, 115
G
Games, 120
Graphic logo, 94
Greeting message, 95
H
Health and safety, 128
Holding, calls, 49
I
Icons, description, 15
Images, downloaded, 123
Inbox, messages
multimedia, 71
text, 62
Infrared, connect, 97
International calls, 25
Internet, 115
J
Java service, 120
K
Key volume, 27
Keypad tones
selecting, 90
sending, 51
Keys
description, 11
location, 10
shortcut, 97
L
Language, select, 96
Last number, redial, 26
Low battery indicator, 22

M
Memory status
downloaded items, 124
multimedia messages, 81
phonebook, 41
text messages, 69
TV images, 88
Menu style, 94
Menus
accessing, 55
list, 56
Message tone, 90
Messages
cell broadcast, 69
greeting, 95
multimedia, 71
text, 62
voice, 69
web, 119
MIDlets, 120
Minute minder, 92
Missed calls, 28, 82
MMS (Multimedia Message Service), 71
Morning call, 99
Multimedia messages
creating/sending, 75
deleting, 73, 74
editing, 75
reading, 71, 74
Multi-party calls, 53
Muting
all sounds, 50
key tones, 51
microphone, 50
N
Names
entering, 42
searching/dialing, 37
Network selection, 113
Network services, 111
Numbers, phone

searching/dialing, 37
storing, 33
O
On/off switch, phone, 22
Organizer, 99
Outbox, messages
multimedia, 74
text, 63
Own number, 95
Owner's Record, 148
P
Peak Performance, 129
Phone
display, 13
icons, 15
keys, 11
layout, 10
resetting, 98
switching on/off, 22
unpacking, 9
Phone while driving, 130
Phonebook
copying, 36
deleting, 36, 40
editing, 36
options, 35
searching/dialing, 37
speed-dialing, 39
storing, 33
Power on/off tone, 91
Power Save feature, 128
Problems, solve, 125
Push message, 119
R
Radio Frequency, 129
Received calls, 82
Received messages
multimedia, 71
text, 62
Reception, 128

Recording
voice memos, 107
Redialing
automatically, 96
manually, 26
Resetting phone, 98
Ring tone, 89
Ring type, 89
Ring volume, 89
Roaming, 113
S
Safe Use of and Access to Your Phone, 130
Safety
information, 128
precautions, 7
Schedule, 100
Searching, phonebook, 37
Security, calls, 96
Sent messages
multimedia, 74
text, 63
Service light, 16, 94
Shortcut, menu, 97
Silent mode, 30
SIM card
installing, 18
SMS (Short Message Service)
inbox, 62
outbox, 63
Soft keys, 31
Sound settings, 89
Sounds, downloaded, 122
Special Precautions, 134
Speed-dialing, 39
Switching on/off
microphone, 50
phone, 22
T
T9 mode, text input, 43
Tasks, to do list
creating, 104
editing, 105
Television, 85

Templates
multimedia, 79
text, 66
Text input mode, 42
Text messages
creating/sending, 64
deleting, 62, 63
reading, 62, 63
setting, 67
Text, enter, 42
Time format, 103
Time, set, 103
To do list, 104
Tone
connect, 92
error, 91
folder, 91
keypad, 90
message, 90
minute minder, 92
power on/off, 91
ring, 89
Travel adapter, 20
TV images, 88
U
User Guide Proprietary Notice, 148
V
Vibration, 30, 90
Voice mail, 69
Voice memos
deleting, 108
playing, 108
recording, 107
Voice server, 69
Volume, adjust
earpiece, 27
keypad tone, 27
ring, 89
W
Waiting call, 112
Wallpaper, 93
WAP browser
cache, clear, 119
favorites, 118
home, access, 115
Watching television, 85
World time, 103

Writing messages
multimedia, 75
text, 64

Access the Menu Functions	① Press the **Menu** soft key. ② Scroll using the Up and Down keys through the list of the menus until you reach the menu you want. ③ Press the **Select** soft key. ④ Scroll using the Up and Down keys through the list of the options until the one you want is selected. ⑤ Press the **Select** soft key.

- *Each of the two soft keys (and) perform the function indicated by the text above it on the bottom line in the display.*

Switch On/Off	Press and hold the key.

Dual Band SGH-p705 GPRS Telephone

Quick Reference Card

Make a Call	① Enter the number. ② Press the key.
End a Call	Briefly press the key.
View Missed Calls After Missing Them	① Open the phone and press the **View** soft key. ② Scroll using the Up and Down keys through the missed calls. ③ To return the call, press the key.
Answer a Call	Open the phone or Press the key.

Adjust the Volume	Press the ▲ or ▼ key on the left side of the phone.
Choose the Alert Type	① Select the **Alert Type** menu option (**Menu 5.3**). ② Select an option: • **Light only** • **Melody** • **Vibration** • **Vibra+Melody** ③ Press the **Select** soft key.
View Television	① Connect the ear-microphone to the jack at the left side of the phone. ② Press and hold the TV key. ② Select the channel using the Left and Right keys.

Store Numbers in Phonebook	① Enter the number and press the **Save** soft key. ② Select a number type. ③ Press the **Select** soft key. ④ Select a memory. ⑤ Press the **Select** soft key. ⑥ Enter the name. ⑦ Press the **OK** soft key. ⑧ If necessary, change the location number. ⑨ Press the **OK** soft key. ⑩ Press the key to return to Idle Mode.
Search for a Number in Phonebook	① Press the **Ph.Book** soft key. ② Select the **Search** option. ③ Enter the first few letters of the name. ④ To scroll through the names, press the Up or Down key. ⑤ Press the **View** soft key. ⑥ To scroll through the numbers, press the Up or Down key. ⑦ Press the key to dial.