This drawing is property of SEC. Use or copy of this drawing without proper permission from the appropriate technical-document managing department is prohibited.

Rev. No

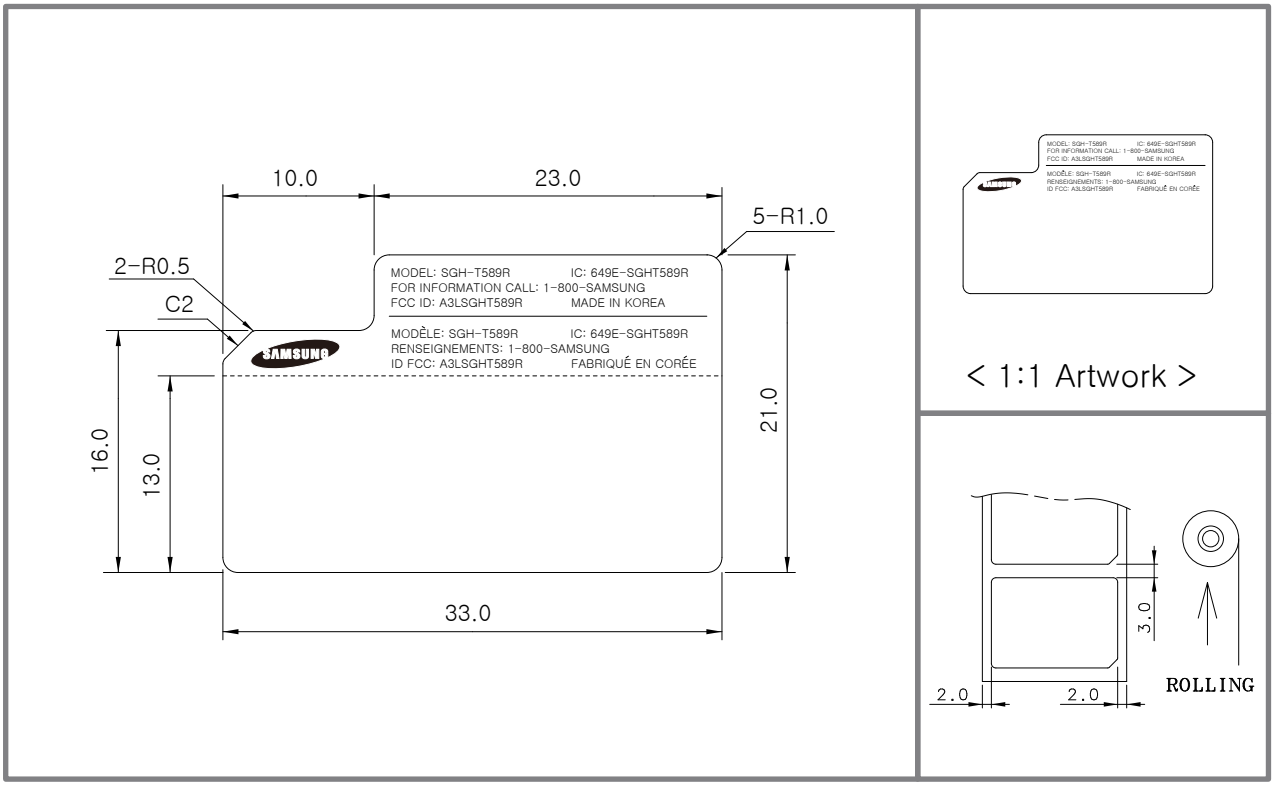

Technical Description

1. Use 'AI/PDF' provided by 'SAMSUNG' for letter and contents
2. Background color is 'WHITE', letter color is 'BLACK'
   (reverse for SAMSUNG LOGO)
3. Back side should be attached to release paper once adhesive is applied.
4. No letter should be blur/smeared
5. The production must be proceed after the approval of R&D Group
6. The product must be within approved sample's specification tolerance.
7. The product must be finished in a ROLL
8. Release paper must be unified for material and color(blue)

MAT.	OPP Laminating 16μ Adhesive 8μ WHITE POLYESTER 50μ Adhesive 25μ (0.10T±0.01)			FIN.	Semi transparency OPP Laminating + UVP Coating	
TITLE	SGH-T589R				LABEL-MAIN	
UNIT	mm	DESIGNED	CHECKED	APPROVED	PROJECTION	
TOLERANCE	+0.0 −0.1	Yun Jun Sang	Jo Kyeong Hwan	Kim June Sop		
SCALE	N/S				SHEET NO	1/1
Vendor	HANSUNG P&I	110331	110331	110331		
SAMSUNG ELECTRONICS		Doc. CODE	GH68-00000A			

The label is placed inside the battery compartment