HOST INSTALLATION MANUAL
FCC ID: A3LSIP007AFS00

According to the KDB 996369, Question 11, A modular transmitter may be certified when the connection to the antenna is made through a host's printed board microstrip trace layout to an external connector, trace antenna, or component (chip) antenna on a printed circuit board (herein referenced as "trace design"). This can be extended to include passive parts for antenna attenuation padding, impedance matching, or providing test ports. Other components, such as amplifiers and active drivers, are not considered a trace layout and must be contained on the module.

OEM instructions (see Clause II in KDB Publication 996369 D01) for all trace designs approved with the module must be followed as below.

A) Trace layout and dimensions including specific designs for each type:

1) Layout of trace design, parts, antenna, connectors, and isolation requirements;

CIRCUIT Design

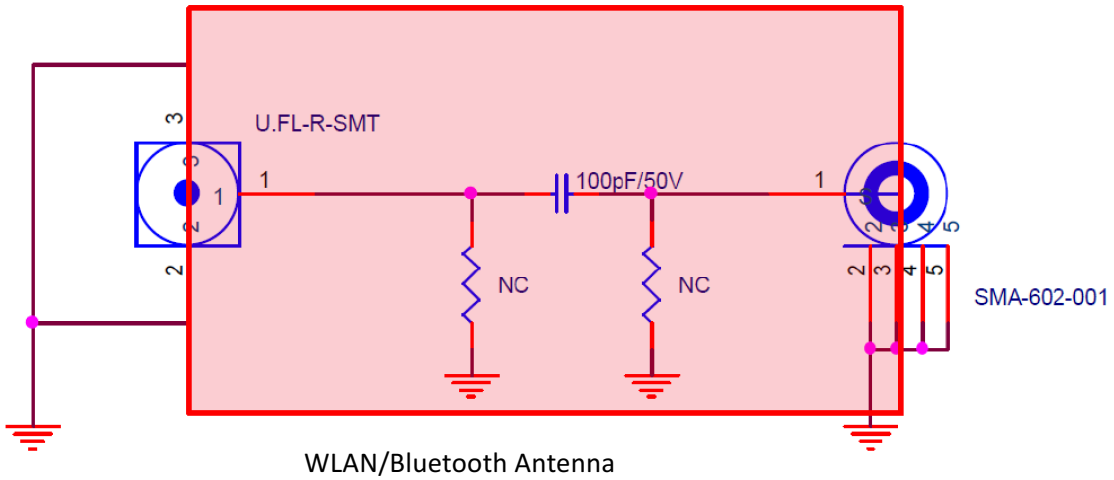

WLAN/Bluetooth Antenna

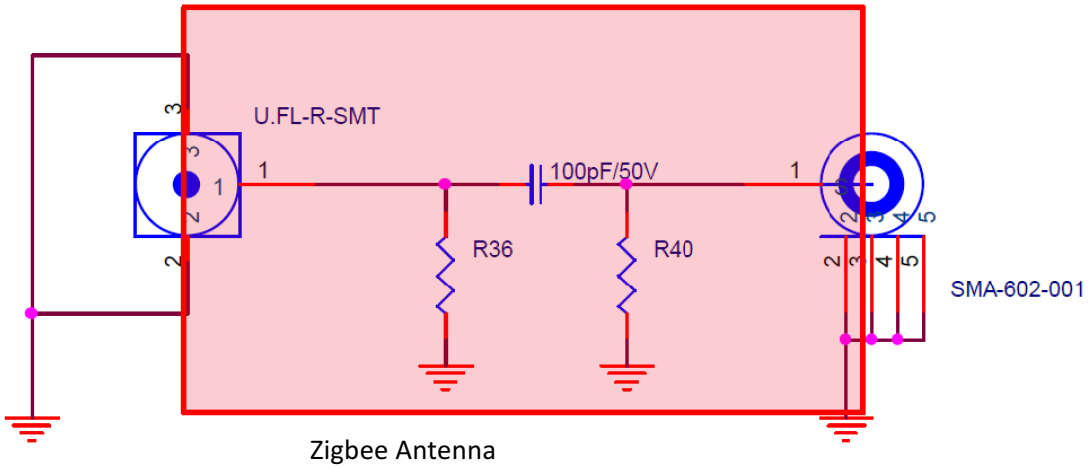

Zigbee Antenna

HOST INSTALLATION MANUAL
FCC ID: A3LSIP007AFS00

PCB Layout

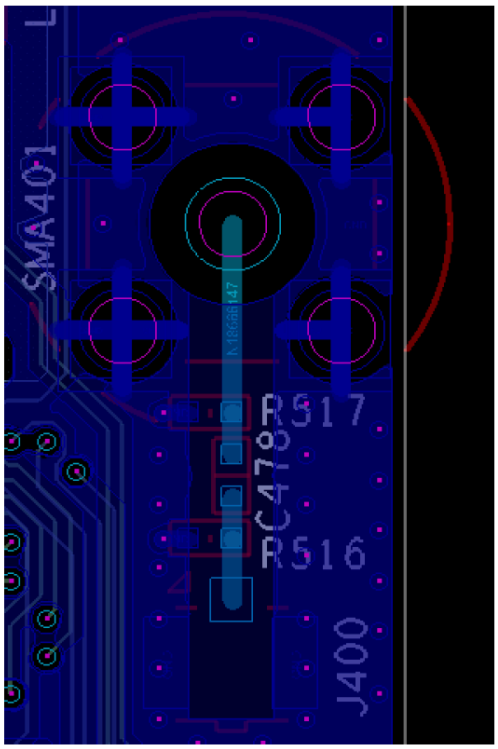

WLAN/Bluetooth Antenna

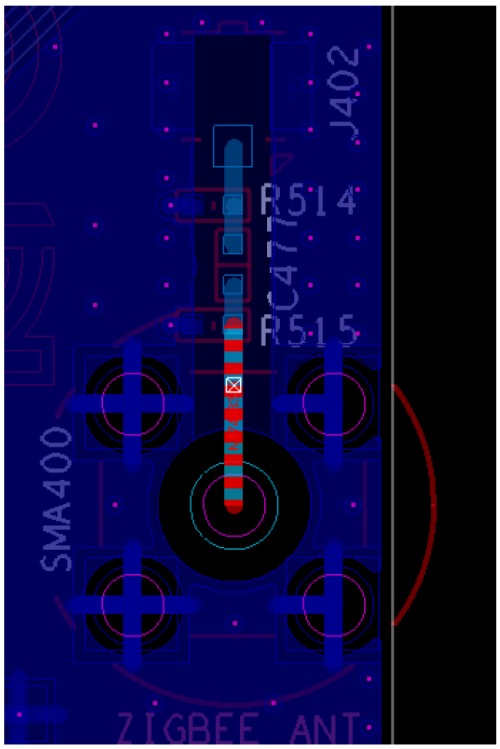

Zigbee Antenna

Trace Information

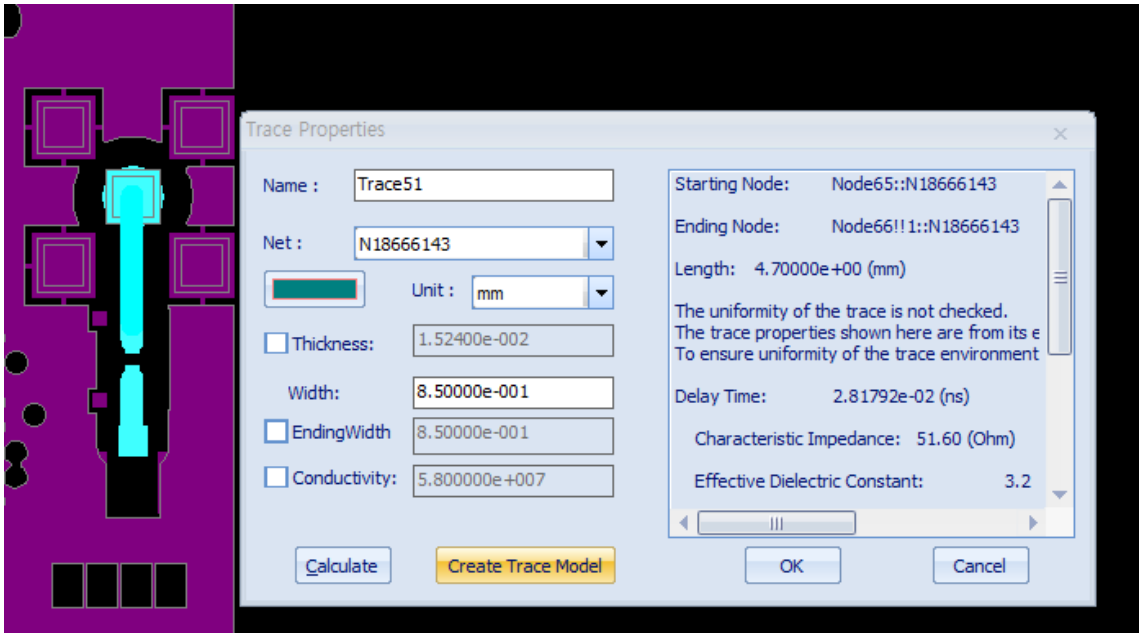

Length: 4.70000e+00 mm
Width: 8.50000e+001 mm
Characteristic Impedance: 51.60 ohm
Effective Dielectric Constant: 3.2

HOST INSTALLATION MANUAL
FCC ID: A3LSIP007AFS00

PCB Information

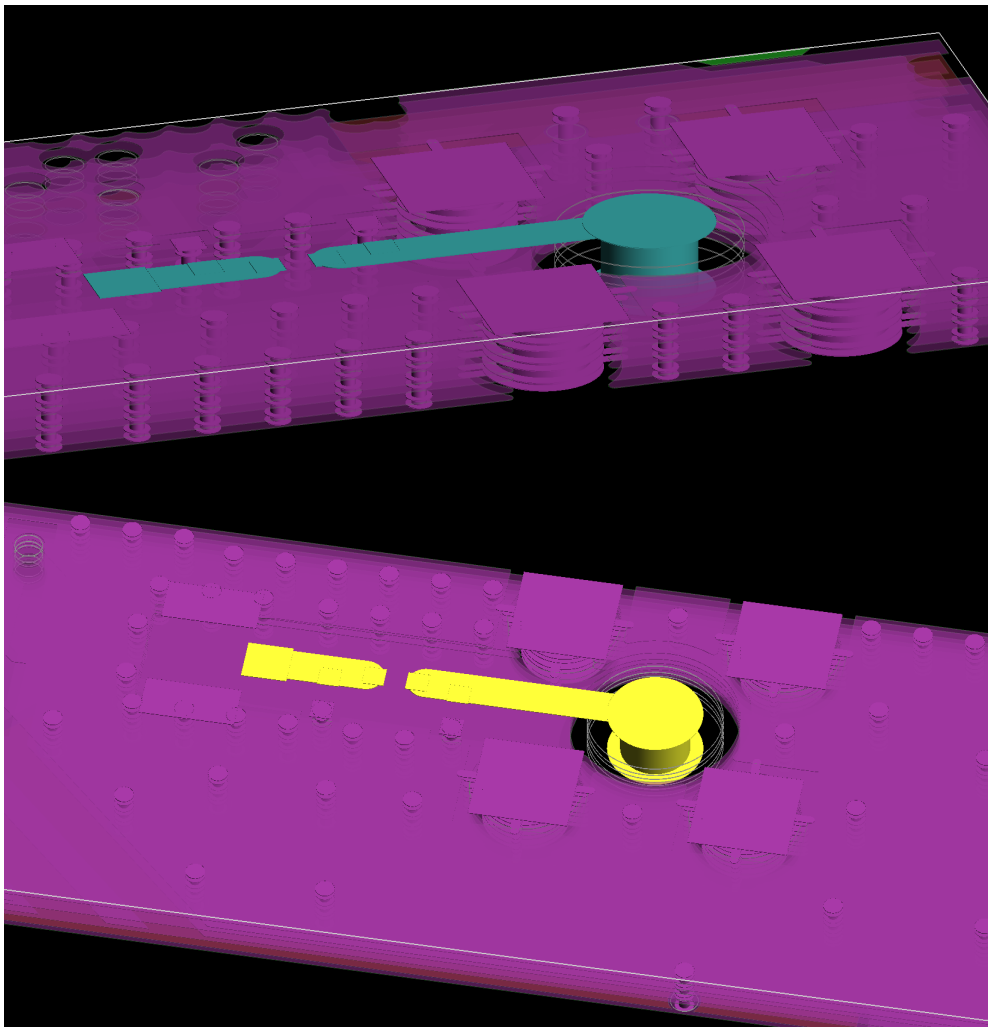

Material Type	Material Const.		Fill	Type	Thk	Er
				S/M	.6	3.50
				Plt	1.60	
	1/2 oz HTE	1		Sig	.60	
DS7402C	2116•54%		.12	Preg	4.72	4.23
	1/2 oz HTE	2	.80	Pln	.60	
DS7402C	0.008 7628			Core	8.00	4.47
	1/2 oz HTE	3	.20	Sig	.60	
DS7402C	2116•54%		.60	Preg	4.72	4.23
	1/2 oz HTE	4	.80	Pln	.60	
DS7402C	0.008 7628			Core	8.00	4.47
	1/2 oz HTE	5	.20	Sig	.60	
DS7402C	2116•54%		.60	Preg	4.72	4.23
	1/2 oz HTE	6	.80	Pln	.60	
DS7402C	0.008 7628			Core	8.00	4.47
	1/2 oz HTE	7	.20	Sig	.60	
DS7402C	2116•54%		.48	Preg	4.72	4.23
	1/2 oz HTE	8		Sig	.60	
				Plt	1.60	
				S/M	.6	3.50

HOST INSTALLATION MANUAL
FCC ID: A3LSIP007AFS00

b) Appropriate parts by manufacturer and specifications.

Bill of Materials

ERP code	Part name	Qty	ERP Description	Manufacturer
CNSMA602001	SMA-602-001	2	FEMALE,SMA-Straight-PCB JACK,DIP,5P,SMA-602-001	DONGJIN TI
CNUFLRSMT1	UFL-R-SMT-1	2	FEMALE, SMD, 3pin, U.FL-R-SMT-1	HIROSE
ET160715-03		2	MHF PLUG CABLE, U.FL-2LPVHF-04N2TC-A30SM	HIROSE

U.FL Connector

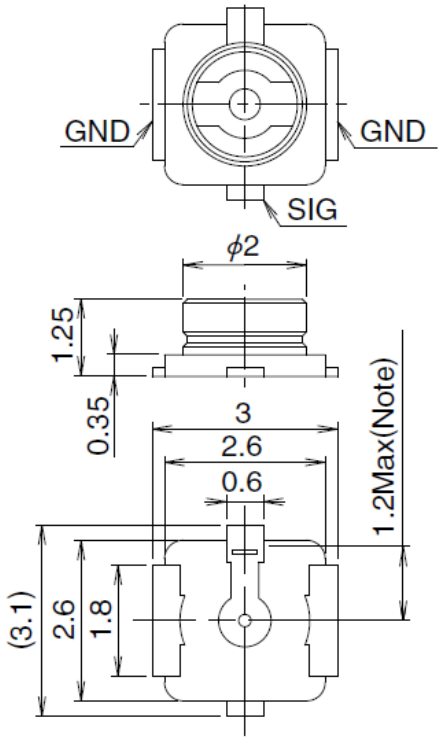

U.FL-R-SMT-1

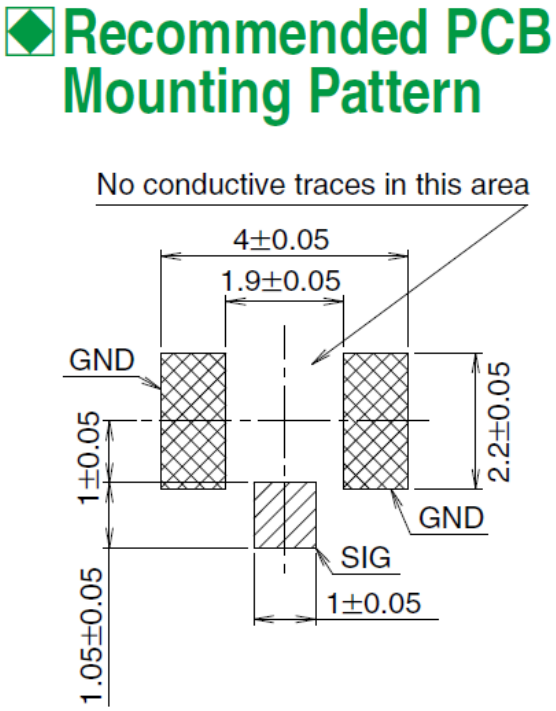

SMA Connector

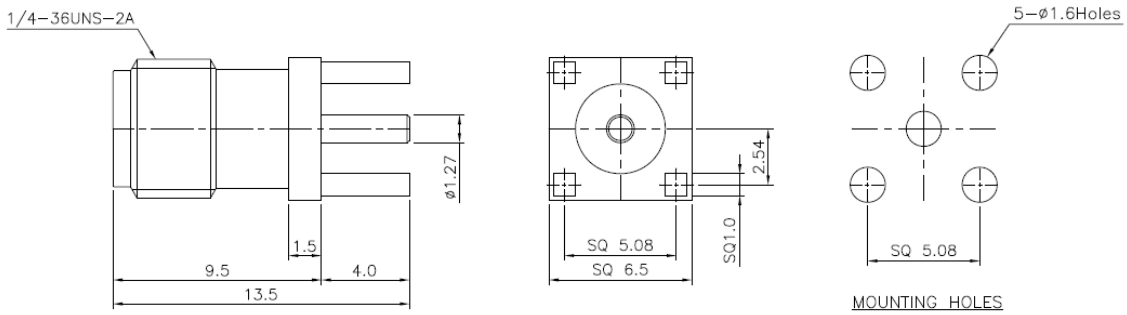

RF Cable

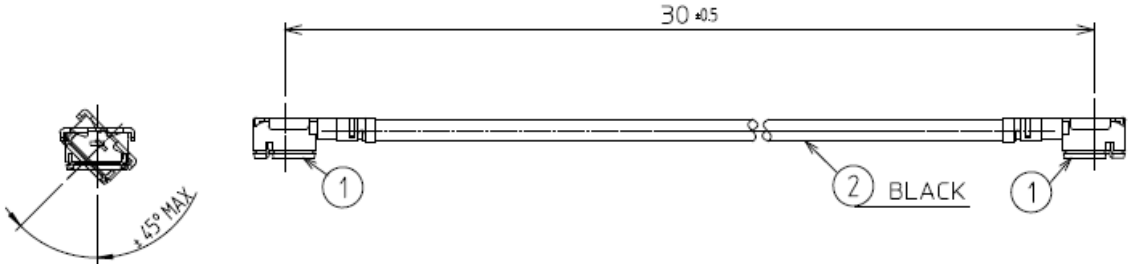

[DIMENSIONS OF CONNECTOR]

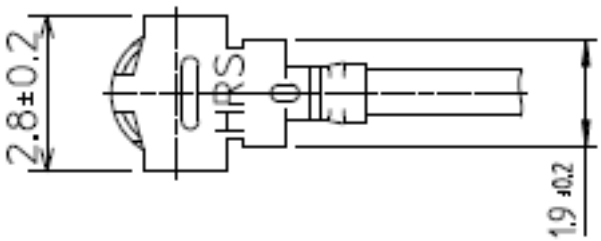

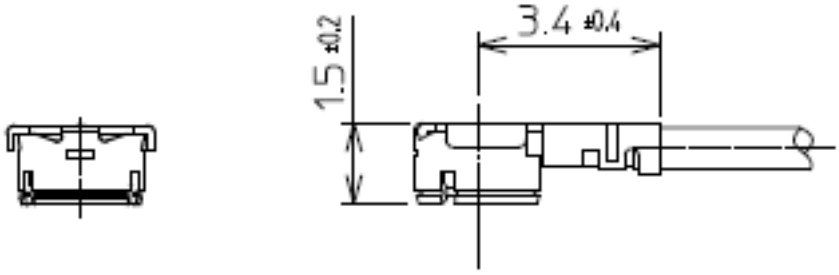

c) Test procedures for design verification and Production test procedures for ensuring compliance.

To meet the requirement as certified modular, output power from the module via circuit layout must be equal or lower than followings.

MODE	FREQUENCY (MHz)		OUTPUT POWER
ZIGBEE	2405	2475	7.63 dBm
WLAN 2.4GHz	2412	2462	24.15 dBm
WLAN 5GHz	5180	5240	15.37 dBm