4. Troubleshooting

This chapter gives helpful information for what to do if you encounter an error.

- Tips for avoiding paper jams 79
- Clearing paper jams 80
- Understanding the status LED 89
- Understanding display messages 91

This chapter gives helpful information for what to do if you encounter an error. If your machine has a display screen, check the message on the display screen first to solve.

If you cannot find a solution to your problem in this chapter, refer to the **Troubleshooting** chapter in the Advanced Guide (see "Troubleshooting" on page 252).

If you cannot find a solution in the User's Guide or the problem persists, call for service.

Tips for avoiding paper jams

By selecting the correct medias, most paper jams can be avoided. To avoid paper jams, refer to the following guidelines:

- Ensure that the adjustable guides are positioned correctly (see "Tray overview" on page 31).
- Do not remove paper from the tray while your machine is printing.
- Flex, fan, and straighten paper before loading.
- Do not use creased, damp, or highly curled paper.
- Do not mix papers in a tray.
- Use only recommended print media (see "Print media specifications" on page 97).

Clearing paper jams

To avoid tearing the paper, pull the jammed paper out slowly and gently.

In tray 1

Click this link to open an animation about clearing a jam.

Illustrations on this user's guide may differ from your machine depending on its options or models. Check your machine type (see "Front view" on page 18).

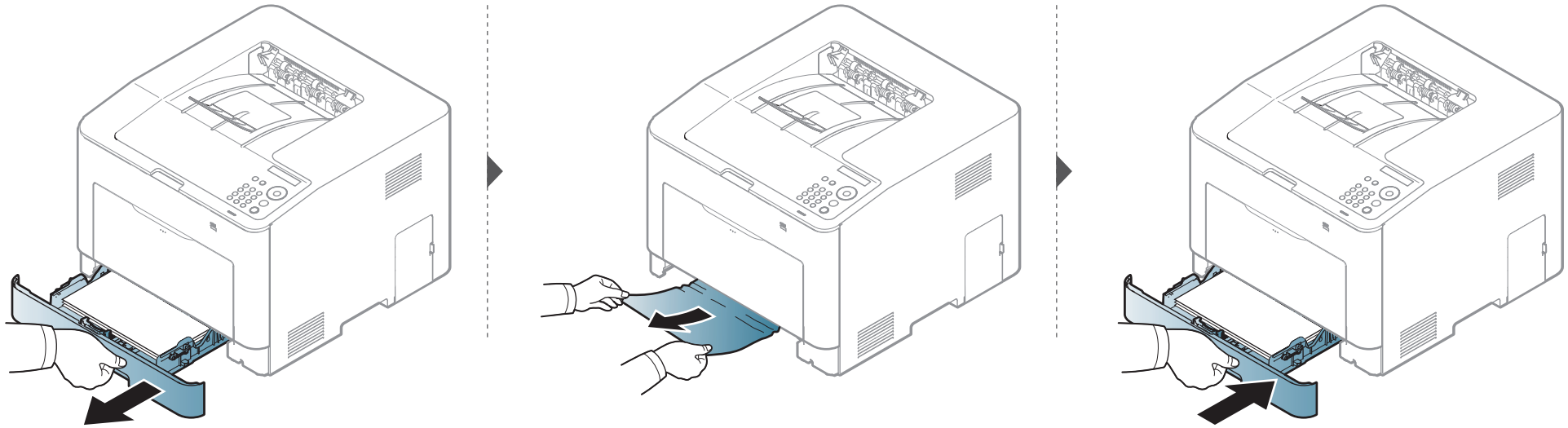

Clearing paper jams

In optional tray

Click this link to open an animation about clearing a jam.

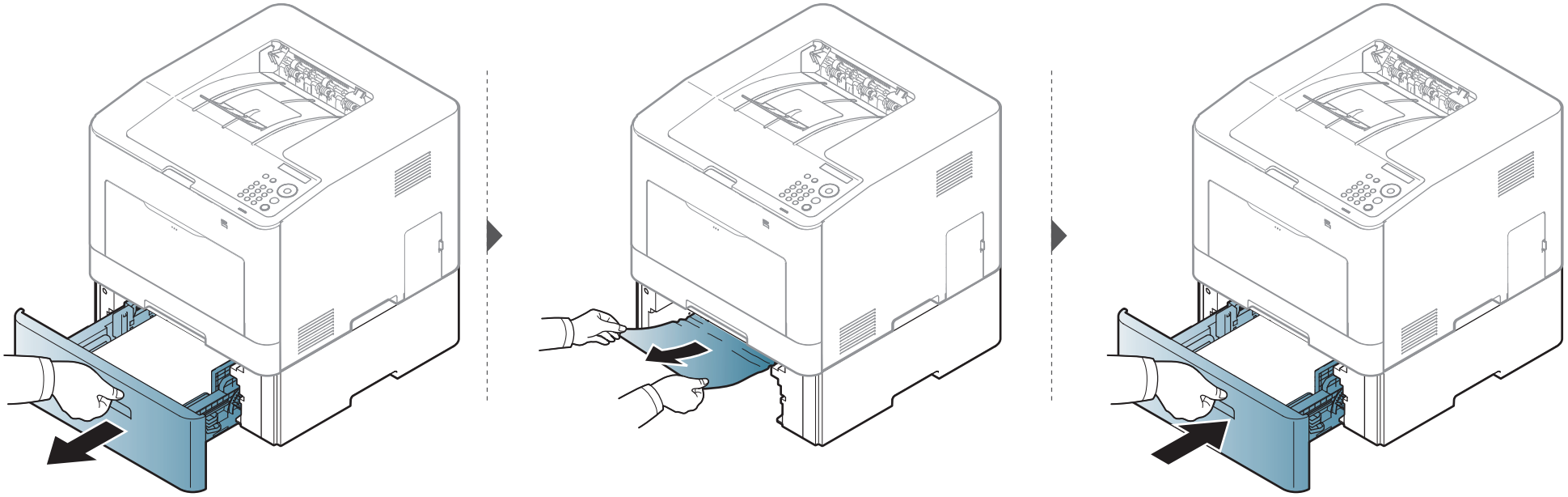

Clearing paper jams

If you do not see the paper in this area, stop and go to next step:

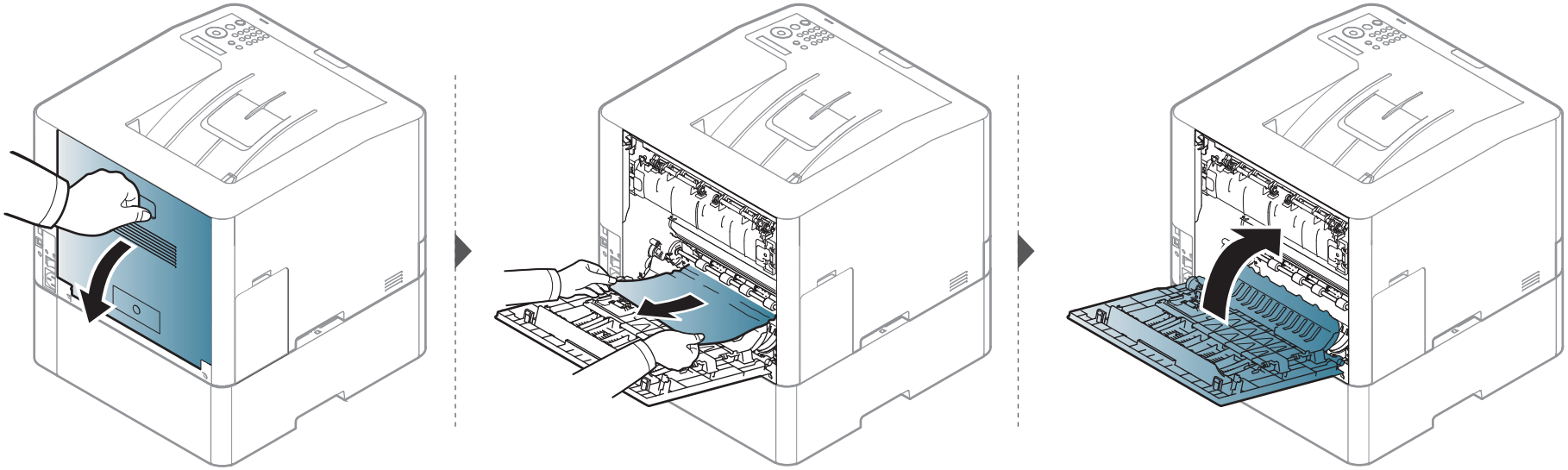

Clearing paper jams

In the multi-purpose tray

Click this link to open an animation about clearing a jam.

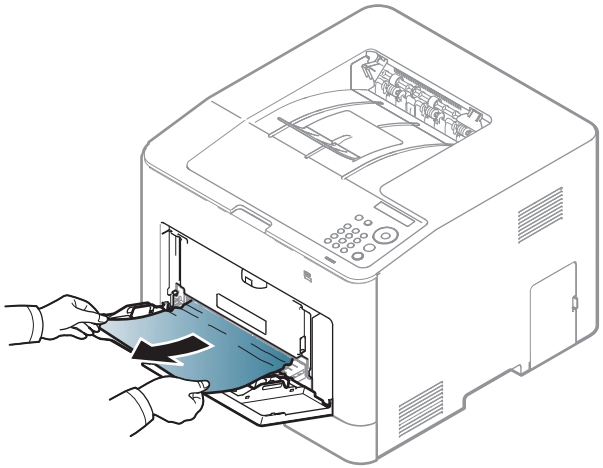

Clearing paper jams

If you do not see the paper in this area, stop and go to next step:

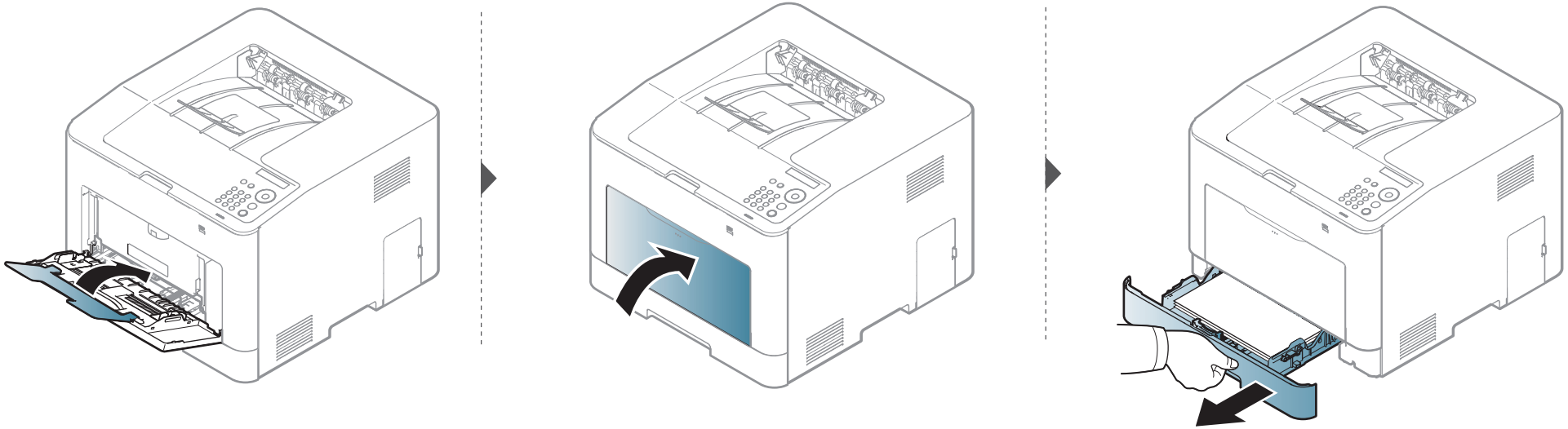

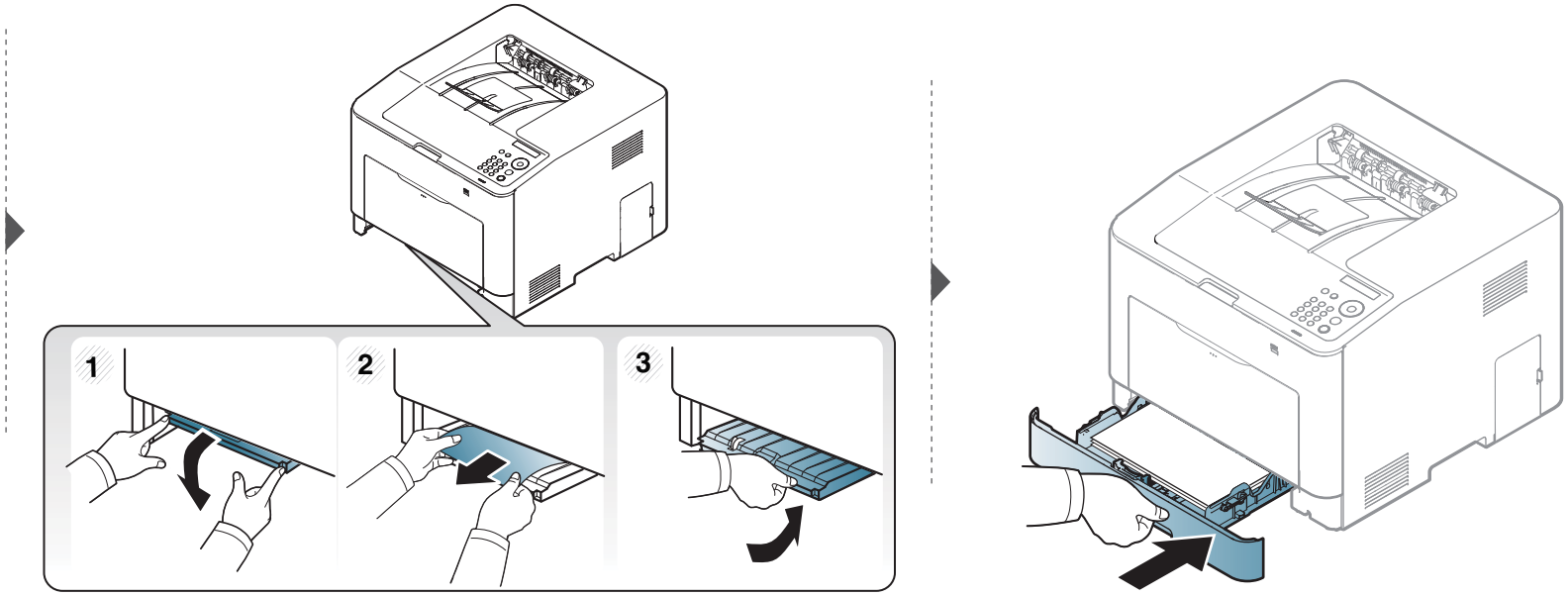

Clearing paper jams

Inside the machine

Click this link to open an animation about clearing a jam.

The fuser area is hot. Take care when removing paper from the machine.

Illustrations on this user's guide may differ from your machine depending on its options or models. Check your machine type (see "Front view" on page 18).

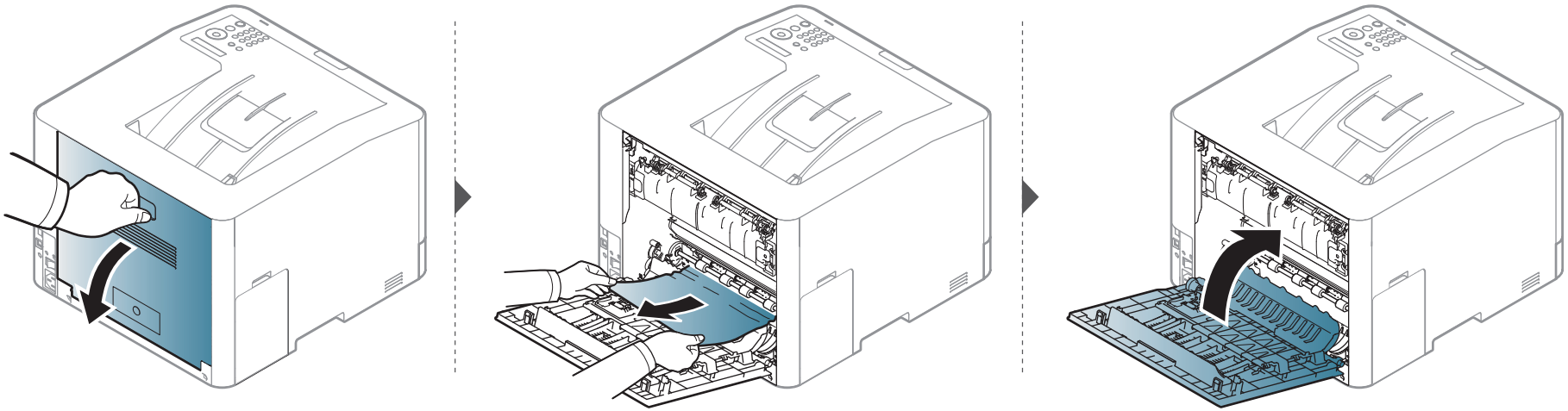

Clearing paper jams

In exit area

Click this link to open an animation about clearing a jam.

The fuser area is hot. Take care when removing paper from the machine.

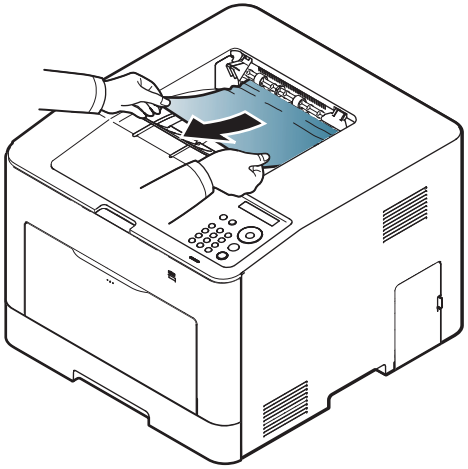

Clearing paper jams

If you do not see the paper in this area, stop and go to next step:

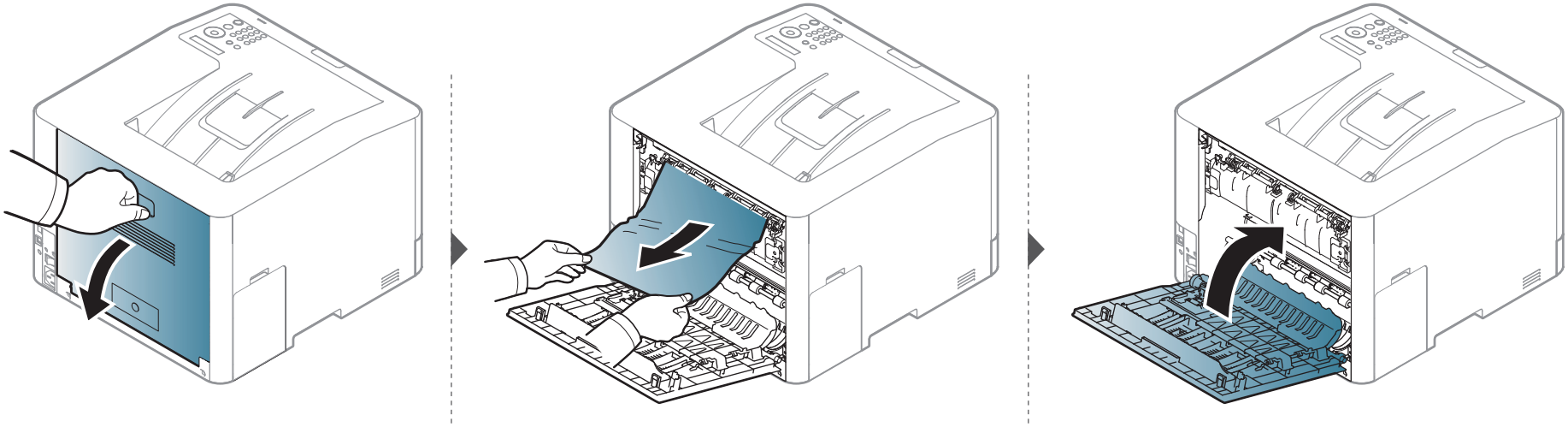

Clearing paper jams

In the duplex unit area

Click this link to open an animation about clearing a jam.

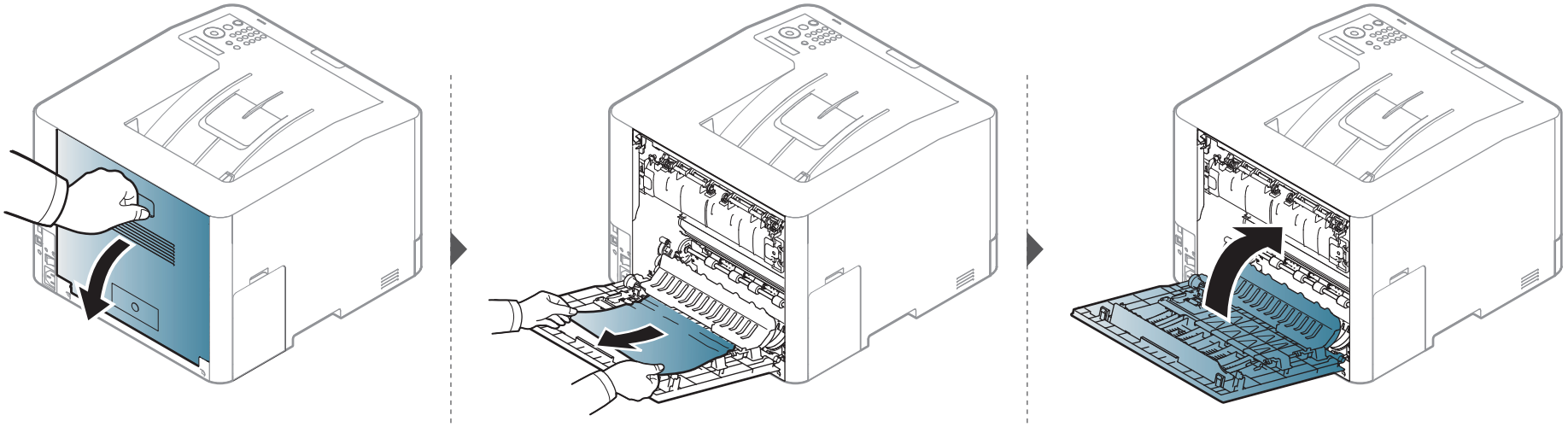

Understanding the status LED

The color of the LED indicates the machine's current status.

- Some LEDs may not be available depending on model or country (see "Control panel overview" on page 20).
- To resolve the error, look at the error message and its instructions from the troubleshooting part (see "Understanding display messages" on page 91).
- You also can resolve the error with the guideline from the computer's Samsung Printing Status program window (see "Using Samsung Printer Status" on page 240).
- If the problem persists, call a service representative.

Understanding the status LED

LED	Status		Description
( ) Status	Off		The machine is off-line.
	Green	Blinking	When the backlight blinks, the machine is receiving or printing data.
		On	• The machine is on-line and can be used.
	Red	Blinking	• A minor error has occurred and the machine is waiting for the error to be cleared. Check the display message. When the problem is cleared, the machine resumes. • Small amount of toner is left in the cartridge. The estimated cartridge life[a] of toner is close. Prepare a new cartridge for replacement. You may temporarily increase the printing quality by redistributing the toner (see "Redistributing toner" on page 60).
		On	• A toner cartridge has almost reached its estimated cartridge life[a]. It is recommended to replace the toner cartridge (see "Replacing the toner cartridge" on page 62). • The cover is opened. Close the cover. • There is no paper in the tray when receiving or printing data. Load paper in the tray. • The machine has stopped due to a major error. Check the display message (see "Understanding display messages" on page 91). • A paper jam has occurred (see "Clearing paper jams" on page 80).
( ) Wireless	Blue	Blinking	The machine is connecting to a wireless network.
		On	The machine is connected to a wireless network (see "Wireless network setup" on page 141).
		Off	The machine is disconnected from a wireless network.
( ) Power	Blue	On	The machine is in power save mode.
		Off	The machine is in ready mode or machine's power is off.

a. Estimated cartridge life means the expected or estimated toner cartridge life, which indicates the average capacity of print-outs and is designed pursuant to ISO/IEC 19798. The number of pages may be affected by operating environment, percentage of image area, printing interval, graphics, media and media size. Some amount of toner may remain in the cartridge even when red LED is on and the printer stops printing.

Understanding display messages

Messages appear on the control panel display to indicate the machine's status or errors. Refer to the tables below to understand the messages' and their meaning, and correct the problem, if necessary.

- You can resolve the error with the guideline from the computers's Printing Status program window (see "Using Samsung Printer Status" on page 240).
- If a message is not in the table, reboot the power and try the printing job again. If the problem persists, call a service representative.
- When you call for service, provide the service representative with the contents of display message.
- Some messages may not appear on the display depending on the options or models.
- [error number] indicates the error number.
- [tray type] indicates the tray number.
- [media type] indicates the media type.
- [media size] indicates the media size.
- [color] indicates the color of toner.

Paper Jam-related messages

Message	Meaning	Suggested solutions
Paper Jam in exit area	Paper has jammed in the exit area.	Clear the jam (see "In exit area" on page 86).
Paper Jam inside machine	Paper has jammed in the inside machine.	Clear the jam (see "Inside the machine" on page 85).
Paper Jam in Tray1	Paper has jammed in the tray.	Clear the jam (see "In tray 1" on page 80).
Paper Jam in Tray2	Paper has jammed in the optional tray.	Clear the jam (see "In optional tray" on page 81).
Paper Jam in MP tray	Paper has jammed in the multi-purpose tray.	Clear the jam (see "CLP-68x Series" on page 83).
Paper Jam or empty	• Paper has jammed in manual feeder. • There is no paper in tray.	• Clear the jam (see "CLP-41x Series/ C181x Series" on page 82). • Load paper in tray (see "Multi-purpose tray" on page 34).
Paper Jam inside of duplex	Paper has jammed during duplex printing. This is applicable only to machines with this feature.	Clear the jam (see "In the duplex unit area" on page 88).

Understanding display messages

Toner-related messages

Message	Meaning	Suggested solutions
Install [color] toner cartridge	A toner cartridge is not installed.	Reinstall the toner cartridge.
	A toner cartridge is not being detected	Reinstall the toner cartridge two or three times to confirm it is seated properly. If the problem persists, contact the service representatives.
	Not removed protective film from toner.	Remove the protective film from the toner cartridge. Refer to Quick Installation Guide provided with your machine.
Not Compatible [color] **toner cart.**	The indicated toner cartridge is not suitable for your machine.	Install the corresponding toner cartridge with a Samsung-genuine cartridge (see "Replacing the toner cartridge" on page 62).
Prepare Toner ▼	Small amount of toner is left in the indicated cartridge. The estimated cartridge life[a] of toner is close.	Prepare a new cartridge for a replacement. You may temporarily increase the printing quality by redistributing the toner (see "Redistributing toner" on page 60).
Replace Toner ▼	The indicated toner cartridge has almost reached its estimated cartridge life[a].	• You can choose **Stop** or **Continue** as shown on the control panel. If you select **Stop**, the printer stops printing. If you select **Continue**, the printer keeps printing but the printing quality cannot be guaranteed. • Replace the toner cartridge for the best print quality when this message appears. Using a cartridge beyond this stage can result in printing quality issues (see "Replacing the toner cartridge" on page 62).
	The indicated toner cartridge has reached its estimated cartridge life[a].	Replace the toner cartridge (see "Replacing the toner cartridge" on page 62).

a. Estimated cartridge life means the expected or estimated toner cartridge life, which indicates the average capacity of print-outs and is designed pursuant to ISO/IEC 19798 (see "Available consumables" on page 55). The number of pages may be affected by operating environment, percentage of image area, printing interval, media, percentage of image area, and media size. Some amount of toner may remain in the cartridge even when replace new cartridge appears and the machine stops printing.

Samsung does not recommend using a non-genuine Samsung toner cartridge such as refilled or remanufactured. Samsung cannot guarantee a non-genuine Samsung toner cartridge's quality. Service or repair required as a result of using non-genuine Samsung toner cartridges will not be covered under the machine warranty.

Understanding display messages

Tray-related messages

Message	Meaning	Suggested solutions
Paper Empty **in** [tray number]	There is no paper in the indicated tray.	Load paper in the tray (see "Loading paper in the tray" on page 32).
Paper Jam **or Empty**	• Paper has jammed in manual feeder. • There is no paper in tray.	• Load paper in tray (see "Multi-purpose tray" on page 34).

Network-related messages

Message	Meaning	Suggested solutions
Network Problem: **IP Conflict**	The IP address is used elsewhere.	Check the IP address or obtain a new IP address.
Wireless **Network Error**	Wireless module is not installed.	Reboot the power and try the printing job again. If the problem persists, please call for service.
802.1x **Network Error**	Fail to authenticate.	Check the network authentication protocol. If the problem persists, contact your network administrator.

Misc. messages

Message	Meaning	Suggested solutions
Adjusting Color **Registration...**	The machine is adjusting the color registration.	Wait a few minutes.
Calibrating **image density…**	The machine is calibrating the image density.	Wait a few minutes.
Door Open **Close it**	The cover is not securely latched.	Close the cover until it locks into place.
Error [error number] **Install** [color] **toner**	The indicated toner cartridge is installed improperly, or the connector is polluted.	Reinstall the Samsung-genuine toner cartridge two or three times to confirm it is seated properly. If the problem persists, please call for service.
Error [error number] **Turn off then on**	The machine unit cannot be controlled.	Reboot the power and try the printing job again. If the problem persists, please call for service.
Error [error number] **Call for service**		
Install TR. **belt unit.**	The transfer belt is not installed.	Install a Samsung-genuine transfer belt.
Not compatible **transfer belt**	The transfer belt of the machine is not for your machine.	Install the a Samsung-genuine part designed for your machine.

Understanding display messages

Message	Meaning	Suggested solutions
Not installed **Waste tank**	The is waste toner container not installed.	Install a Samsung-genuine waste toner container.
Not proper room temp. Move set	The machine is in a room with improper room temperature.	Move the machine to a room with proper room temperature.
Output bin Full **Remove paper**	The output tray is full.	Remove papers from the output tray, the machine resumes printing. If the problem persists, call for service.
Prepare new Transfer belt	The life of the transfer belt will expired soon.	Replace the transfer belt with a new one. If the problem persists, please call for service.
Replace new Transfer belt	The life of the transfer belt has expired.	
Replace Fuser Soon	The life of the fuser unit will be expired soon.	Replace the fuser unit with a new one. If the problem persists, please call for service.
Replace new Fuser unit	The life of the fuser unit will be expired.	
• **Replace new Tray1 roller**	The life of the tray pick-up roller will expired soon.	Replace the tray pick-up roller with a new one. If the problem persists, please call for service.
• **Replace new Tray2 roller**	The life of the tray pick-up roller will expired.	
Transfer Belt Error	The transfer belt cannot be controlled.	Reboot the power and try the printing job again. If the problem persists, please call for service.

Message	Meaning	Suggested solutions
Waste toner Full **Replace new one**	The waste toner container is full.	Replace the waste toner container.

5. Appendix

This chapter provides product specifications and information concerning applicable regulations.

- Specifications 96
- Regulatory information 105
- Copyright 115

Specifications

General specifications

The specification values listed below are subject to change without notice. See **www.samsung.com** for possible changes in information.

Items		Description
Dimension[a]	**Width x Length x Height**	420 x 452.5 x 311.3 mm (16.54 x 17.81 x 12.26 inches)
Weight[a]	**Machine with consumables**	20.15 Kg (44.42 lbs)
Noise Level[b c]	**Ready mode**	Less than 32 dB (A)
	Print mode	Less than 52 dB (A)
Temperature	**Operation**	10 to 30 °C (50 to 86 °F)
	Storage (packed)	-20 to 40 °C (-4 to 104 °F)
Humidity	**Operation**	20 to 80% RH
	Storage (packed)	10 to 90% RH
Power rating[d]	**110 volt models**	AC 110 - 127 V
	220 volt models	AC 220 - 240 V
Power consumption	**Average operating mode**	Less than 450 W
	Ready mode	Less than 14 W
	Power save mode [e]	Less than 2.0 W
	Power off mode [f]	Less than 0.1 W
Wireless[g]	**Module**	SPW-B43143U

a. Dimensions and weight are measured without a other accessories.
b. Sound Pressure Level, ISO 7779. Configuration tested: basic machine installation, A4 paper, simplex printing.
c. China only: If the equipment's noise is louder than 63 db (A), the equipment should be placed in region of relatively independent advice.
d. See the rating label on the machine for the correct voltage (V), frequency (hertz) and of current (A) for your machine.
e. The power consumption of power save mode may be affected by the machine’s status, setting conditions, operating environment, and measuring equipment and method the country uses.
f. Power consumption can be completely avoided only when the power cable is not connected.
g. Wireless models only (see "Features by models" on page 7).

Specifications

Print media specifications

Type	Size	Dimensions	Weight/Capacity[a]	
			Tray1/ Optional tray	Multi-purpose tray
Plain paper [b] [c]	**Letter**	216 x 279 mm (8.5 x 11 inches)	70 to 90 g/m^2 (19 to 24 lbs bond) • Tray1: 250 sheets of 80 g/m^2 (21 lbs bond) • Optional tray: 520 sheets of 80 g/m^2 (20 lbs bond)	70 to 90 g/m^2 (19 to 24 lbs bond) • 50 sheets
	Legal	216 x 356 mm (8.5 x 14 inches)		
	US Folio	216 x 330 mm (8.5 x 13 inches)		
	A4	210 x 297 mm (8.27 x 11.69 inches)		
	Oficio	216 x 343 mm (8.5 x 13.5 inches)		
	JIS B5	182 x 257 mm (7.17 x 10.12 inches)		
	ISO B5	176 x 250 mm (6.93 x 9.84 inches)		
	Executive	184 x 267 mm (7.25 x 10.5 inches)		
	Statement	140 x 216 mm (5.5 x 8.5 inches)		
	A5	148 x 210 mm (5.83 x 8.27 inches)		
	A6	105 x 148 mm (4.13 x 5.83 inches)	70 to 90 g/m^2 (19 to 24 lbs bond) • 150 sheets of 80 g/m^2 (21 lbs bond) Not available in optional tray.	
Envelope	**Envelope Monarch**	98 x 191 mm (3.87 x 7.5 inches)	75 to 90 g/m^2 (20 to 24 lbs bond) • 20 sheets Not available in optional tray.	75 to 90 g/m^2 (20 to 24 lbs bond) • 5 sheets
	Envelope No. 10	105 x 241 mm (4.12 x 9.5 inches)		
	Envelope No. 9	98 x 225 mm (3.87 x 8.87 inches)		
	Envelope DL	110 x 220 mm (4.33 x 8.66 inches)		
	Envelope C5	162 x 229 mm (6.38 x 9.02 inches)		
	Envelope C6	114 x 162 mm (4.49 x 6.38 inches)		

Specifications

Type	Size	Dimensions	Weight/Capacity[a]	
			Tray1/ Optional tray	Multi-purpose tray
Thick paper [b c]	**Refer to the Plain paper section**	Refer to the Plain paper section	91 to 105 g/m^2 (24 to 28 lbs bond) • 50 sheets of 105 g/m^2 (28 lbs bond)	91 to 105 g/m^2 (24 to 28 lbs bond) • 10 sheets
Thicker paper [b c]	**Refer to the Plain paper section**	Refer to the Plain paper section	164 to 220 g/m^2 (43 to 59 lbs bond) • 50 sheets of 220 g/m^2 (59 lbs bond) Not available in optional tray.	164 to 220 g/m^2 (43 to 59 lbs bond) • 10 sheets
Thin paper	**Refer to the Plain paper section**	Refer to the Plain paper section	60 to 70 g/m^2 (16 to 19 lbs bond) • 250 sheets of 70 g/m^2 (19 lbs bond)	60 to 70 g/m^2 (16 to 19 lbs bond) • 50 sheets
Cotton, Color, Pre-printed	**Refer to the Plain paper section**	Refer to the Plain paper section	75 to 90 g/m^2 (20 to 24 lbs bond) • 250 sheets of 80 g/m^2 (21 lbs bond) Not available in optional tray.	75 to 90 g/m^2 (20 to 24 lbs bond) • 50 sheets
Recycled	**Refer to the Plain paper section**	Refer to the Plain paper section	70 to 90 g/m^2 (19 to 24 lbs bond) • 250 sheets of 80 g/m^2 (21 lbs bond)	70 to 90 g/m^2 (19 to 24 lbs bond) • 50 sheets
Transparency	**Letter, A4**	Refer to the Plain paper section	138 to 146 g/m^2 (35 to 39 lbs bond) • 50 sheets Not available in optional tray.	138 to 146 g/m^2 (35 to 39 lbs bond) • 10 sheets
Labels [d]	**Letter, Legal, US Folio, A4, JIS B5, ISO B5, Executive, A5**	Refer to the Plain paper section	120 to 150 g/m^2 (32 to 40 lbs bond) • 50 sheets Not available in optional tray.	120 to 150 g/m^2 (32 to 40 lbs bond) • 10 sheets

Specifications

Type	Size	Dimensions	Weight/Capacity[a]	
			Tray1/ Optional tray	Multi-purpose tray
Card stock [b c]	**Letter, Legal, US Folio, A4, JIS B5, ISO B5, Executive, A5**	Refer to the Plain paper section	121 to 163 g/m^2 (32 to 43 lbs bond) • 50 sheets	121 to 163 g/m^2 (32 to 43 lbs bond) • 10 sheets Index card 3 x 5 is supported
Bond paper	**Refer to the Plain paper section**	Refer to the Plain paper section	105 to 120 g/m^2 (28 to 32 lbs bond) • 50 sheets	105 to 120 g/m^2 (28 to 32 lbs bond) • 10 sheets
Archive, Punched paper, Letterhead	**Refer to the Plain paper section**	Refer to the Plain paper section	• 250 sheets	• 50 sheets
Glossy Photo [b]	**Letter, A4, Postcard 4x6**	Refer to the Plain paper section	111 to 130 g/m^2 (30 to 35 lbs bond) for tray • Tray1: 30 sheets • Optional tray: 50 sheets	111 to 130 g/m^2 (30 to 35 lbs bond) • 5 sheets
		Refer to the Plain paper section	131 to 175 g/m^2 (35 to 47 lbs bond) • Tray1: 30 sheets • Optional tray: 50 sheets	131 to 175 g/m^2 (35 to 47 lbs bond) • 5 sheets
		Refer to the Plain paper section	176 to 220 g/m^2 (47 to 59 lbs bond) • Tray1: 30 sheets • Optional tray: 50 sheets	176 to 220 g/m^2 (47 to 59 lbs bond) • 5 sheets

Specifications

Type	Size	Dimensions	Weight/Capacity[a]	
			Tray1/ Optional tray	Multi-purpose tray
Minimum size (custom)		• **Tray1:** 98 x 127 mm (3.86 x 5 inches) • **Optional tray:** 148.5 x 210 mm (5.85 x 8.27inches) • **Multi-Purpose tray:** 76 x 127 mm (3 x 5 inches)	• 60 to 220 g/m^2 (16 to 59 lbs bond) for tray1. • 60 to 163 g/m^2 (16 to 43 lbs bond) for optional tray.	60 to 220 g/m^2 (16 to 59 lbs bond)
Maximum size (custom)		216 x 356 mm (8.5 x 14 inches)		

a. Maximum capacity may differ depending on media weight, thickness, and environmental conditions.
b. Post card 4 x 6 is supported for tray1 , Multi-purpose tray.
c. Index card (3 x 5) is supported for Multi-purpose tray.
d. The smoothness of the labels used in this machine is 100 to 250 (sheffield). This means the numeric level of smoothness.

Specifications

System requirements

Microsoft® Windows®

Operating system	Requirement (recommended)		
	CPU	RAM	free HDD space
Windows® XP	Intel® Pentium® III 933 MHz (Pentium IV 1 GHz)	128 MB (256 MB)	1.5 GB
Windows Server® 2003	Intel® Pentium® III 933 MHz (Pentium IV 1 GHz)	128 MB (512 MB)	1.25 GB to 2 GB
Windows Server® 2008	Intel® Pentium® IV 1 GHz (Pentium IV 2 GHz)	512 MB (2 GB)	10 GB
Windows Vista®	Intel® Pentium® IV 3 GHz	512 MB (1 GB)	15 GB
Windows® 7	Intel® Pentium® IV 1 GHz 32-bit or 64-bit processor or higher	1 GB (2 GB)	16 GB
	• Support for DirectX® 9 graphics with 128 MB memory (to enable the Aero theme). • DVD-R/W Drive		
Windows Server® 2008 R2	Intel® Pentium® IV 1 GHz (x86) or 1.4 GHz (x64) processors (2 GHz or faster)	512 MB (2 GB)	10 GB
Windows® 8 **Windows® 8.1**	Intel® Pentium® IV 1 GHz 32-bit or 64-bit processor or higher	2 GB	20 GB
	• Support for DirectX® 9 graphics with 128 MB memory (to enable the Aero theme). • DVD-R/W Drive		
Windows Server® 2012 **Windows Server® 2012 R2**	Intel® Pentium® IV 1 GHz (x86) or 1.4 GHz (x64) processors (2 GHz or faster)	512 MB (2 GB)	32 GB

- Internet Explorer 6.0 or higher is the minimum requirement for all Windows operating systems.
- Users who have administrator rights can install the software.
- **Windows Terminal Services** is compatible with your machine.

Specifications

Mac

Operating system	Requirements (Recommended)		
	CPU	RAM	Free HDD space
Mac OS X 10.4	• Intel® processors • PowerPC G4/G5	• 128 MB for a powerPC based Mac (512 MB) • 512 MB for an Intel-based Mac (1 GB)	1 GB
Mac OS X 10.5	• Intel® processors • 867 MHz or faster Power PC G4/G5	512 MB (1 GB)	1 GB
Mac OS X 10.6	• Intel® processors	1 GB (2 GB)	1 GB
Mac OS X 10.7 - 10.9	• Intel® processors	2 GB	4 GB

Linux

Items	Requirements
Operating system	Red Hat Enterprise Linux 5, 6 Fedora 11, 12, 13, 14, 15, 16, 17, 18, 19 openSUSE 11.0, 11.1, 11.2, 11.3, 11.4, 12.1, 12.2, 12.3 Ubuntu 10.04, 10.10, 11.04, 11.10, 12.04, 12.10, 13.04 SUSE Linux Enterprise Desktop 10, 11 Debian 5.0, 6.0, 7.0, 7.1 Mint 13, 14 , 15
CPU	Pentium IV 2.4GHz (Intel Core™2)
RAM	512 MB (1 GB)
Free HDD space	1 GB (2 GB)

Specifications

Unix

Items	Requirements
Operating system	Sun Solaris 9, 10, 11 (x86, SPARC) HP-UX 11.0, 11i v1, 11i v2, 11i v3 (PA-RISC, Itanium) IBM AIX 5.1, 5.2, 5.3, 5.4, 6.1 7.1 (PowerPC)
Free HDD space	Up to 100 MB

Specifications

Network environment

Network and wireless models only (see "Features by models" on page 7).

You need to set up the network protocols on the machine to use it as your network machine. The following table shows the network environments supported by the machine.

Items	Specifications
Network interface	• Ethernet 10/100/1000 Base-TX Wired Lan • 802.11b/g/n Wireless LAN
Network operating system	• Windows® XP, Windows Server® 2003, Windows Vista®, Windows® 7, Windows® 8, Windows Server® 2008 R2 • Various Linux OS • Mac OS X 10.5 -10.9 • UNIX OS
Network protocols	• TCP/IPv4 • DHCP, BOOTP • DNS, WINS, Bonjour, SLP, UPnP • Standard TCP/IP Printing (RAW), LPR, IPP, WSD, AirPrint, Google Cloud Print, ThinPrint • SNMPv 1/2/3, HTTP, IPSec • TCP/IPv6 (DHCP, DNS, Standard TCP/IP Printing, LPR, SNMPv 1/2/3, HTTP, IPSec)
Wireless security	• Authentication: Open System, Shared Key, WPA-Enterprise/ Personal, WPA2-Enterprise/Personal • Encryption: WEP64, WEP128, TKIP, AES

Regulatory information

This machine is designed for a normal work environment and certified with several regulatory statements.

Laser safety statement

The printer is certified in the U.S. to conform to the requirements of DHHS 21 CFR, chapter 1 Subchapter J for Class I(1) laser products, and elsewhere is certified as a Class I laser product conforming to the requirements of IEC 60825-1 : 2007.

Class I laser products are not considered to be hazardous. The laser system and printer are designed so there is never any human access to laser radiation above a Class I level during normal operation, user maintenance or prescribed service condition.

Warning

Never operate or service the printer with the protective cover removed from laser/scanner assembly. The reflected beam, although invisible, can damage your eyes.

When using this product, these basic safety precautions should always be followed to reduce risk of fire, electric shock, and injury to persons:

CAUTION - CLASS 3B. INVISIBLE LASER RADIATION WHEN OPEN. AVOID EXPOSURE TO THE BEAM.

DANGER - INVISIBLE LASER RADIATION WHEN OPEN. AVOID DIRECT EXPOSURE TO BEAM.

DANGER - KLASSE 3B. UNSICHTBARE LASERSTRAHLUNG, WENN OFFEN. STRAHLENAUSSETZUNG VERMEIDEN.

VORSICHT - UNSICHTBARE LASERSTRAHLUNG KLASSE 3 B, WENN ABDECKUNG GEÖFFNET. NICHT DEM STRAHL AUSSETZEN.

ATTENZIONE - CLASSE 3B. RADIZIONI LASER INVISBILI CON IL DISPOSITIVO APERTO. EVITARE L'ESPOSIZIONE AL RAGGIO.

PRECAUCIÓN - RADIACIÓN LÁSER INVISIBLE DE CLASE 3B PRESENTE AL ABRIR. EVITE LA EXPOSICIÓN AL HAZ.

PERIGO - CLASSE 3B. RADIAÇÃO LASER INVISÍVEL AO ABRIR. EVITE EXPOSIÇÃO DIRECTA AO FEIXE.

GEVAAR - KLASSE 3B. ONZICHTBARE LASERSTRALING INDIEN GEOPEND. VERMIJD BLOOTSTELLING AAN DE STRAAL.

ADVARSEL - KLASSE 3B. USYNLIG LASERSTRÅLING VED ÅBNING. UNDGÅ UDSÆTTELSE FOR STRÅLING.

ADVARSEL. - KLASSE 3B. USYNLIG LASERSTRÅLING NÅR DEKSEL ÅPNES. UNNGÅ EKSPONERING FOR STRÅLEN.

VARNING - KLASS 3B OSYNLIG LASERSTRÅLNING NÄR DENNA DEL ÄR ÖPPNAD. STRÅLEN ÄR FARLIG.

VAROITUS - LUOKAN 3B NÄKYMÄTTÖMÄLLE LASER-SÄTEILYÄ AVATTUNA. VÄLTÄ ALTISTUMISTA SÄTEELLE.

注 意 - CLASS 3B。严禁打开，以免被不可见激光辐射泄漏灼伤

주 의 - 열리면 등급 3B 비가시 레이저 방사선 이 방출됩니다. 광선에 노출을 피하십시오.

Regulatory information

Ozone safety

This product's ozone emission rate is under 0.1 ppm. Because ozone is heavier than air, keep the product in a place with good ventilation.

Power saver

This printer contains advanced energy conservation technology that reduces power consumption when it is not in active use.

When the printer does not receive data for an extended period of time, power consumption is automatically lowered.

ENERGY STAR and the ENERGY STAR mark are registered U.S. marks.

For more information on the ENERGY STAR program see http://www.energystar.gov

For ENERGY STAR certified models, the ENRGY STAR label will be on your machine. Check if your machine is ENERGY STAR certified.

Recycling

Recycle or dispose of the packaging material for this product in an environmentally responsible manner.

China only

回收和再循环

为了保护环境，我公司已经为废弃的产品建立了回收和再循环系统。
我们会为您无偿提供回收同类废旧产品的服务。
当您要废弃您正在使用的产品时，请您及时与授权耗材更换中心取得联系，
我们会及时为您提供服务。

Website: http://www.samsung.com/cn/support/location/supportServiceLocation.do?page=SERVICE.LOCATION

中国能效标识

型号	能效等级	典型能耗 （kW·h）
C2620	1	1.62

依据国家标准 GB 25956-2010

仅适用于海拔2000m以下地区安全使用。

(2000m ཁྱད་ཙམ་ལས་མཐོ་རིས་ཀྱི་ས་གནས་ཁག་ཏུ་ཁོ་ཡིས་ཕན་ཐོགས་ཡོད་པ་ཨིན།)

"ཆུ་མཚོའི་ངོས་ལས་མཐོ་ཚད་སྟེ2000མན་གྱི་ས་ཁྱད་ཙམ་ལས་བོད་སྒྲོད་ཀྱི་ལས་འཐུས།

دېڭىز يۈزىدىن 2000 مېتىر تۆۋەن رايونلاردىلا بىخەتەر ئىشلەتكىلى بولىدۇ

Dan hab yungh youq gij digih haijbaz 2000 m doxroengz haenx ancienz sawjyungh.

Regulatory information

Correct disposal of this product (Waste electrical & electronic equipment)

(Applicable in countries with separate collection systems)

This marking on the product, accessories or literature indicates that the product and its electronic accessories (e.g. charger, headset, USB cable) should not be disposed of with other household waste at the end of their working life. To prevent possible harm to the environment or human health from uncontrolled waste disposal, please separate these items from other s of waste and recycle them responsibly to promote the sustainable reuse of material resources.

Household users should contact either the retailer where they purchased this product, or their local government office, for details of where and how they can take these items for environmentally safe recycling.

Business users should contact their supplier and check the terms and conditions of the purchase contract. This product and its electronic accessories should not be mixed with other commercial wastes for disposal.

(The United States of America only)

Dispose unwanted electronics through an approved recycler. To find the nearest recycling location, go to our website: www.samsung.com/recyclingdirect Or call, (877) 278 - 0799

State of California Proposition 65 Warning (US Only)

The California Safe Drinking Water and Toxic Enforcement Act requires the Governor of California to publish a list of chemicals known to the State of California to cause cancer or reproductive toxicity and requires businesses to warn of potential exposure to such chemicals.

WARNING: This product contains chemicals known to the State of California to cause cancer, birth defects or other reproductive harm.
This appliance can cause low-level exposure to the chemicals, which can be minimized by operating the appliance in a well ventilated area.

Radio frequency emissions

FCC information to the user

This device complies with Part 15 of the FCC Rules. Operation is subject to the following two conditions:

- This device may not cause harmful interference, and
- This device must accept any interference received, including interference that may cause undesired operation.

Regulatory information

This equipment has been tested and found to comply with the limits for a Class B digital device, pursuant to Part 15 of the FCC Rules. These limits are designed to provide reasonable protection against harmful interference in a residential installation. This equipment generates, uses and can radiate radio frequency energy and, if not installed and used in accordance with the instructions, may cause harmful interference to radio communications. However, there is no guarantee that interference will not occur in a particular installation. If this equipment does cause harmful interference to radio or television reception, which can be determined by turning the equipment off and on, the user is encouraged to try to correct the interference by one or more of the following measures:

- Reorient or relocate the receiving antenna.
- Increase the separation between the equipment and receiver.
- Connect the equipment into an outlet on a circuit different from that to which the receiver is connected.
- Consult the dealer or experienced radio TV technician for help.

Change or modifications not expressly approved by the manufacturer responsible for compliance could void the user's authority to operate the equipment.

Canadian radio interference regulations

This digital apparatus does not exceed the Class B limits for radio noise emissions from digital apparatus as set out in the interference-causing equipment standard entitled “Digital Apparatus”, ICES-003 of the Industry and Science Canada.

Cet appareil numérique respecte les limites de bruits radioélectriques applicables aux appareils numériques de Classe B prescrites dans la norme sur le matériel brouilleur: “Appareils Numériques”, ICES-003 édictée par l’Industrie et Sciences Canada.

United States of America

Federal Communications Commission (FCC)

Intentional emitter per FCC Part 15

Low power, Radio LAN devices (radio frequency (RF) wireless communication devices), operating in the 2.4 GHz/5 GHz Band, may be present (embedded) in your printer system. This section is only applicable if these devices are present. Refer to the system label to verify the presence of wireless devices.

Wireless devices that may be in your system are only qualified for use in the United States of America if an FCC ID number is on the system label.

Regulatory information

The FCC has set a general guideline of 20 cm (8 inches) separation between the device and the body, for use of a wireless device near the body (this does not include extremities). This device should be used more than 20 cm (8 inches) from the body when wireless devices are on. The power output of the wireless device (or devices), which may be embedded in your printer, is well below the RF exposure limits as set by the FCC.

This transmitter must not be collocated or operation in conjunction with any other antenna or transmitter.

Operation of this device is subject to the following two conditions: (1) This device may not cause harmful interference, and (2) this device must accept any interference received, including interference that may cause undesired operation of the device.

Wireless devices are not user serviceable. Do not modify them in any way. Modification to a wireless device will void the authorization to use it. Contact manufacturer for service.

FCC Statement for Wireless LAN use:

While installing and operating this transmitter and antenna combination the radio frequency exposure limit of 1m W/cm2 may be exceeded at distances close to the antenna installed. Therefore, the user must maintain a minimum distance of 20cm from the antenna at all times. This device cannot be collocated with another transmitter and transmitting antenna.

Russia only

AB57

Germany only

Das Gerät ist nicht für die Benutzung am Bildschirmarbeitsplatz gemäß BildscharbV vorgesehen.

Regulatory information

Turkey only

- RoHS
  EEE Yönetmeliğine Uygundur.
  This EEE is compliant with RoHS.
- Bu ürünün ortalama yaşam süresi 7 yıl, garanti suresi 2 yildir.

Thailand only

This telecommunication equipment conforms to NTC technical requirement.

Replacing the Fitted Plug (for UK Only)

Important

The mains lead for this machine is fitted with a standard (BS 1363) 13 amp plug and has a 13 amp fuse. When you change or examine the fuse, you must re-fit the correct 13 amp fuse. You then need to replace the fuse cover. If you have lost the fuse cover, do not use the plug until you have another fuse cover.

Contact the people from you purchased the machine.

The 13 amp plug is the most widely used in the UK and should be suitable. However, some buildings (mainly old ones) do not have normal 13 amp plug sockets. You need to buy a suitable plug adaptor. Do not remove the moulded plug.

If you cut off the moulded plug, get rid of it straight away.

You cannot rewire the plug and you may receive an electric shock if you plug it into a socket.

Important warning:

You must earth this machine.

The wires in the mains lead have the following color code:

- **Green and Yellow:** Earth
- **Blue:** Neutral
- **Brown:** Live

If the wires in the mains lead do not match the colors marked in your plug, do the following:

You must connect the green and yellow wire to the pin marked by the letter “E” or by the safety ‘Earth symbol’ or colored green and yellow or green.

You must connect the blue wire to the pin which is marked with the letter “N” or colored black.

You must connect the brown wire to the pin which is marked with the letter “L” or colored red.

You must have a 13 amp fuse in the plug, adaptor, or at the distribution board.

Declaration of conformity (European countries)

Approvals and Certifications

CE

Hereby, Samsung Electronics, declares that this [C2620x series] is in compliance with the essential requirements and other relevant provisions of R&TTE Directive 1999/5/EC.

The declaration of conformity may be consulted at **www.samsung.com**, go to Support > Download center and enter your printer (MFP) name to browse the EuDoC.

January 1, 1995: Council Directive 2006/95/EC Approximation of the laws of the member states related to low voltage equipment.

January 1, 1996: Council Directive 2004/108/EC, approximation of the laws of the Member States related to electromagnetic compatibility.

March 9, 1999: Council Directive 1999/5/EC on radio equipment and telecommunications terminal equipment and the mutual recognition of their conformity. A full declaration, defining the relevant Directives and referenced standards can be obtained from your Samsung Electronics Co., Ltd. representative.

EC Certification

Certification to 1999/5/EC Radio Equipment & Telecommunications Terminal Equipment Directive (FAX)

This Samsung product has been self-certified by Samsung for pan-European single terminal connection to the analogue public switched telephone network (PSTN) in accordance with Directive 1999/5/EC. The product has been designed to work with the national PSTNs and compatible PBXs of the European countries:

In the event of problems, you should contact the Euro QA Lab of Samsung Electronics Co., Ltd. in the first instance.

The product has been tested against TBR21. To assist in the use and application of terminal equipment which complies with this standard, the European Telecommunication Standards Institute (ETSI) has issued an advisory document (EG 201 121) which contains notes and additional requirements to ensure network compatibility of TBR21 terminals. The product has been designed against, and is fully compliant with, all of the relevant advisory notes contained in this document.

Regulatory information

European radio approval information (for products fitted with EU-approved radio devices)

Low power, Radio LAN type devices (radio frequency (RF) wireless communication devices), operating in the 2.4 GHz/5 GHz band, may be present (embedded) in your printer system which is intended for home or office use. This section is only applicable if these devices are present. Refer to the system label to verify the presence of wireless devices.

CE

Wireless devices that may be in your system are only qualified for use in the European Union or associated areas if a CE mark is on the system label.

The power output of the wireless device or devices that may be embedded in your printer is well below the RF exposure limits as set by the European Commission through the R&TTE directive.

European states qualified under wireless approvals:

EU countries

European states with restrictions on use:

EU

EEA/EFTA countries

No limitations at this time

Israel only

מס' אישור אלחוטי של משרד התקשורת הוא 51-30319
אסור להחליף את האנטנה המקורית של המכשיר,
ולא לעשות בו כל שינוי טכני אחר.

Regulatory compliance statements

Wireless guidance

Low power, Radio LAN devices (radio frequency (RF) wireless communication devices), operating in the 2.4 GHz/5 GHz Band, may be present (embedded) in your printer system. The following section is a general overview of considerations while operating a wireless device.

Additional limitations, cautions, and concerns for specific countries are listed in the specific country sections (or country group sections). The wireless devices in your system are only qualified for use in the countries identified by the Radio Approval Marks on the system rating label. If the country you will be using the wireless device in, is not listed, contact your local Radio Approval agency for requirements. Wireless devices are closely regulated and use may not be allowed.

Regulatory information

The power output of the wireless device or devices that may be embedded in your printer is well below the RF exposure limits as known at this time. Because the wireless devices (which may be embedded into your printer) emit less energy than is allowed in radio frequency safety standards and recommendations, manufacturer believes these devices are safe for use. Regardless of the power levels, care should be taken to minimize human contact during normal operation.

As a general guideline, a separation of 20 cm (8 inches) between the wireless device and the body, for use of a wireless device near the body (this does not include extremities) is typical. This device should be used more than 20 cm (8 inches) from the body when wireless devices are on and transmitting.

This transmitter must not be collocated or operation in conjunction with any other antenna or transmitter.

Some circumstances require restrictions on wireless devices. Examples of common restrictions are listed below:

Radio frequency wireless communication can interfere with equipment on commercial aircraft. Current aviation regulations require wireless devices to be turned off while traveling in an airplane. IEEE 802.11 (also known as wireless Ethernet) and Bluetooth communication devices are examples of devices that provide wireless communication.

In environments where the risk of interference to other devices or services is harmful or perceived as harmful, the option to use a wireless device may be restricted or eliminated. Airports, Hospitals, and Oxygen or flammable gas laden atmospheres are limited examples where use of wireless devices may be restricted or eliminated. When in environments where you are uncertain of the sanction to use wireless devices, ask the applicable authority for authorization prior to use or turning on the wireless device.

Every country has different restrictions on the use of wireless devices. Since your system is equipped with a wireless device, when traveling between countries with your system, check with the local Radio Approval authorities prior to any move or trip for any restrictions on the use of a wireless device in the destination country.

If your system came equipped with an internal embedded wireless device, do not operate the wireless device unless all covers and shields are in place and the system is fully assembled.

Wireless devices are not user serviceable. Do not modify them in any way. Modification to a wireless device will void the authorization to use it. Contact manufacturer for service.

Only use drivers approved for the country in which the device will be used. See the manufacturer System Restoration Kit, or contact manufacturer Technical Support for additional information.

Regulatory information

China only

产品中有毒有害物质或元素的名称及含量

部件名称	有毒有害物质或元素					
	铅 (Pb)	汞 (Hg)	镉 (Cd)	六价铬 (Cr^{6+})	多溴联苯 (PBB)	多溴联苯醚 (PBDE)
塑料	O	O	O	O	O	O
金属 (机箱)	X	O	O	O	O	O
印刷电路部件 (PCA)	X	O	O	O	O	O
电缆 / 连接器	X	O	O	O	O	O
电源设备	X	O	O	O	O	O
电源线	X	O	O	O	O	O
机械部件	X	O	O	O	O	O
卡盒部件	X	O	O	O	O	O
定影部件	X	O	O	O	O	O
扫描仪部件 - CCD (如果有)	X	X	O	O	O	O
扫描仪部件 - 其它 (如果有)	X	O	O	O	O	O
印刷电路板部件 (PBA)	X	O	O	O	O	O
墨粉	O	O	O	O	O	O
滚筒	O	O	O	O	O	O

○：表示该有毒有害物质在该部件所有均质材料中的含量均在 SJ/T 11363-2006 标准规定的限量要求以下。

×：表示该有毒有害物质至少在该部件的某一均质材料中的含量超出 SJ/T 11363-2006 标准规定的限量要求。

以上表为目前本产品含有有毒有害物质的信息。本信息由本公司的配套厂家提供，经本公司审核后而做成，本产品的部分部件含有有毒有害物质，这些部件是在现有科学技术水平下暂时无可替代物质，但三星电子将会一直为满足 SJ/T 11363-2006 标准而做不懈的努力。

Copyright

© 2014 Samsung Electronics Co., Ltd. All rights reserved.

This user's guide is provided for information purposes only. All information included herein is subject to change without notice.

Samsung Electronics is not responsible for any direct or indirect damages, arising from or related to use of this user's guide.

- Samsung and the Samsung logo are trademarks of Samsung Electronics Co., Ltd.
- Microsoft, Windows, Windows Vista, Windows 7, Windows 8, and Windows Server 2008 R2 are either registered trademarks or trademarks of Microsoft Corporation.
- Google, Picasa, Google Docs, Android and Gmail are either registered trademarks or trademarks of Google Inc.
- Google Cloud Print is a trademark of Google Inc.
- iPad, iPhone, iPod touch, Mac and Mac OS are trademarks of Apple Inc., registered in the U.S. and other countries. AirPrint and the AirPrint logo are trademarks of Apple Inc.
- All other brand or product names are trademarks of their respective companies or organizations.

Refer to the '**LICENSE.txt**' file in the provided CD-ROM for the open source license information.

REV.1.00

User's Guide

Samsung Printer **Pro*Xpress***

C262x series

ADVANCED

This guide provides information about installation, advanced configuration, operation and troubleshooting on various OS environments.

Some features may not be available depending on models or countries.

BASIC

This guide provides information concerning installation, basic operation and troubleshooting on Windows.

ADVANCED

1. Software Installation

Installation for Mac 120
Reinstallation for Mac 121
Installation for Linux 122
Reinstallation for Linux 123

2. Using a Network-Connected

Useful network programs 125
Wired network setup 126
Installing driver over the network 129
IPv6 configuration 137
Wireless network setup 140
Samsung Mobile Print 182
Using the NFC feature 183
AirPrint 185
Google Cloud Print™ 186

3. Useful Setting Menus

Before you begin reading a chapter 189
Information 190
Layout 191
Paper 193
Graphic 194
System Setup 195
Emulation 199
Image Mgr. 200
Network 201
Direct USB 203
Job Manage 204

4. Special Features

Altitude adjustment 206
Entering various characters 207
Printing features 208
Using optional device features 226

5. Useful Management Tools

Accessing management tools 228
Easy Capture Manager 229
Samsung AnyWeb Print 230
Samsung Easy Color Manager 231
Easy Eco Driver 232
Using SyncThru™ Web Service 233
Using Samsung Easy Printer Manager 237
Using Samsung Printer Status 240
Using Samsung Printer Experience 242
Using the Linux Unified Driver Configurator 248

6. Troubleshooting

Paper feeding problems 253
Power and cable connecting problems 254
Printing problems 255
Printing quality problems 259
Operating system problems 267

1. Software Installation

This chapter provides instructions for installing essential and helpful software for use in an environment where the machine is connected via a cable. A locally connected machine is a machine directly attached to your computer using the cable. If your machine is attached to a network, skip the following steps below and go on to installing a network connected machine's driver (see "Installing driver over the network" on page 129).

- **Installation for Mac** 120
- **Reinstallation for Mac** 121
- **Installation for Linux** 122
- **Reinstallation for Linux** 123

- If you are a Windows OS user, refer to the Basic Guide for installing the machine's driver (see "Installing the driver locally" on page 22).
- Only use a USB cable no longer than 3 meters (118 inches).

Installation for Mac

1 Make sure that the machine is connected to your computer and powered on.

2 Insert the supplied software CD into your CD-ROM drive.

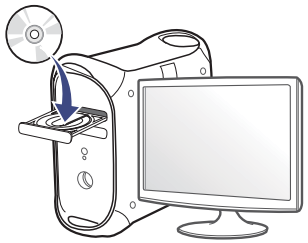

3 Double-click the CD-ROM icon that appears on your Mac desktop.

- For Mac OS X 10.8, double-click the CD-ROM that appears on **Finder**.

4 Double-click the **MAC_Installer** folder > **Installer OS X** icon.

5 Click **Continue**.

6 Read the license agreement and click **Continue**.

7 Click **Agree** to agree to the license agreement.

8 Click **Install**. All components necessary for machine operations will be installed.

If you click **Customize**, you can choose individual components to install.

9 Enter the password and click **OK**.

10 Select **USB Connected Printer** on the **Printer Connection Type** and click **Continue**.

11 Click **Add Printer** button to select your printer and add it to your printer list.

12 After the installation is finished, click **Close**.

Reinstallation for Mac

If the printer driver does not work properly, uninstall the driver and reinstall it.

1. Open the **Applications** folder > **Samsung** > **Printer Software Uninstaller**.
2. To uninstall printer software, click **Continue**.
3. Check the program you want to delete and click **Uninstall**.
4. Enter the password and click **OK**.
5. After the uninstallation is finished, click **Close**.

If a machine has already been added, delete it from the **Print Setup Utility** or **Print & Fax**.

Installation for Linux

You need to download Linux software packages from the Samsung website to install the printer software (http://www.samsung.com > find your product > Support or Downloads).

Installing the Unified Linux Driver

You must log in as a super user (root) to install the machine software. If you are not a super user, ask your system administrator.

1. Make sure that the machine is connected to your computer and powered on.
2. Copy **Unified Linux Driver** package to your system.
3. Open Terminal program and go to the folder that you copied the package to.1
4. Extract the package.
5. Move to **uld** folder.
6. Execute "./**install.sh**" command (If you're not logged in as root, execute the command with "**sudo**" as "**sudo ./install.sh**")
7. Proceed with installation.
8. When installation finished, launch printing utility(Go to **System** > **Administration** > **Printing** or execute "**system-config-printer**" command in Terminal program).
9. Click **Add** button.
10. Select your printer.
11. Click **Forward** button and add it to your system.

Reinstallation for Linux

If the printer driver does not work properly, uninstall the driver and reinstall it.

1. Open **Terminal** program.
2. Move to **uld** folder extracted from **Unified Linux Driver** package.
3. Execute "./**uninstall.sh**" command (If you're not logged in as root, execute the command with "**sudo**" as "**sudo ./uninstall.sh**")
4. Proceed with uninstallation.

2. Using a Network-Connected Machine

This chapter gives you step-by-step instructions for setting up a network connected machine and software.

- Useful network programs 125
- Wired network setup 126
- Installing driver over the network 129
- IPv6 configuration 138
- Wireless network setup 141
- Samsung Mobile Print 167
- Using the NFC feature 168
- AirPrint 170
- Google Cloud Print™ 172

Supported optional devices and features may differ according to your model (see "Features by models" on page 7).

Useful network programs

There are several programs available to setup the network settings easily in a network environment. For the network administrator especially, managing several machines on the network is possible.

- Before using the programs below, set the IP address first.
- Some features and optional goods may not be available depending on model or country (see "Features by models" on page 7).

SyncThru™ Web Service

The web server embedded on your network machine allows you to do the following tasks (see "Using SyncThru™ Web Service" on page 233).

- Check the supplies information and status.
- Customize machine settings.
- Set the email notification option. When you set this option, the machine status (toner cartridge shortage or machine error) will be sent to a certain person's email automatically.
- Configure the network parameters necessary for the machine to connect to various network environments.

SyncThru™ Web Admin Service

Web-based machine management solution for network administrators. SyncThru™ Web Admin Service provides you with an efficient way of managing network devices and lets you remotely monitor and troubleshoot network machines from any site with corporate internet access.

- Download this program from Samsung website (http://www.samsung.com > find your product > Support or Downloads).

SetIP wired network setup

This utility program allows you to select a network interface and manually configure the IP addresses for use with the TCP/IP protocol.

- See "IPv4 configuration using SetIP (Windows)" on page 126.
- See "IPv4 configuration using SetIP (Mac)" on page 127.
- See "IPv4 configuration using SetIP (Linux)" on page 128.

- The machine that does not support the network port, it will not be able to use this feature (see "Rear view" on page 19).
- TCP/IPv6 is not supported by this program.

Wired network setup

Printing a network configuration report

You can print **Network Configuration Report** from the machine's control panel that will show the current machine's network settings. This will help you to set up a network.

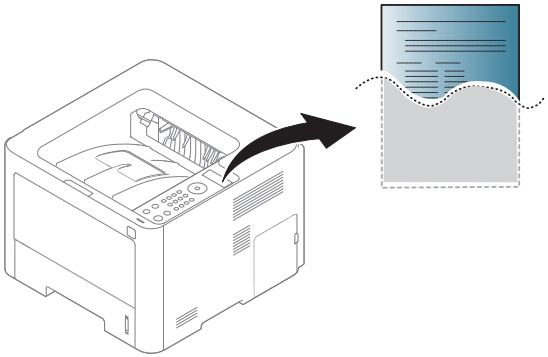

Press the (**Setup**) on the touch screen and select **Network** > **Network Configuration**.

Using this **Network Configuration Report**, you can find your machine's MAC address and IP address.

For example:

- MAC Address: 00:15:99:41:A2:78
- IP Address: 169.254.192.192

Setting IP address

- The machine that does not support the network interface, it will not be able to use this feature (see "Rear view" on page 19).
- TCP/IPv6 is not supported by this program.

First, you have to set up an IP address for network printing and managements. In most cases a new IP address will be automatically assigned by a DHCP (Dynamic Host Configuration Protocol) server located on the network.

IPv4 configuration using SetIP (Windows)

Before using the SetIP program, disable the computer firewall from **Control Panel** > **Security Center** > **Windows Firewall**.

The following instructions may differ for your model.

1. Download the software from the Samsung website then unpack and install it: (http://www.samsung.com > find your product > Support or Downloads).
2. Follow the instructions in the installation window.
3. Connect your machine to the network with a network cable.

4 Turn on the machine.

5 From the Windows **Start** menu, select **All Programs** > **Samsung Printers** > **SetIP** > **SetIP**.

6 Click the icon (third from left) in the SetIP window to open the TCP/IP configuration window.

7 Enter the machine's new information into the configuration window. In a corporate intranet, you may need to have this information assigned by a network manager before proceeding.

Find the machine's MAC address from the **Network Configuration Report** (see "Printing a network configuration report" on page 126) and enter it without the colons. For example, 00:15:99:29:51:A8 becomes 0015992951A8.

8 Click **Apply**, and then click **OK**. The machine will automatically print the **Network Configuration Report**. Confirm that all the settings are correct.

IPv4 configuration using SetIP (Mac)

Before using the SetIP program, disable the computer firewall from **System Preferences** > **Security** > **Firewall**.

The following instructions may vary from your model.

1 Connect your machine to the network with a network cable.

2 Insert the supplied software CD into your CD-ROM drive.

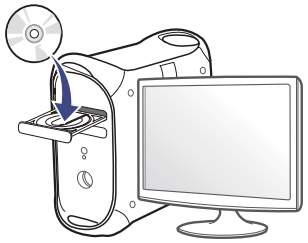

3 Double-click the CD-ROM icon that appears on your Mac desktop.

- For Mac OS X 10.8, Double-click the CD-ROM that appears on Finder.

4 Double-click the **MAC_Installer** folder > **Installer OS X** icon.

5 Click **Continue**.

6 Read the license agreement and click **Continue**.

7 Click **Agree** to agree to the license agreement.

8 Click **Install**. All components necessary for machine operations will be installed.

If you click **Customize**, you can choose individual components to install.

9 Enter the password and click **OK**.

10 When the message that warns that all applications will close on your computer appears, click **Continue**.

11 Select **Network Connected Printer(Wired or Wireless)** on the **Printer Connection Type** and click **Set IP Address** button.

12 Click the icon (third from left) in the SetIP window to open the TCP/IP configuration window.

13 Enter the machine's new information into the configuration window. In a corporate intranet, you may need to have this information assigned by a network manager before proceeding.

Find the machine's MAC address from the **Network Configuration Report** (see "Printing a network configuration report" on page 126) and enter it without the colons. For example, 00:15:99:29:51:A8 becomes 0015992951A8.

14 Click **Apply**, and then click **OK**. The machine will automatically print the **Network Configuration Report**. Confirm that all the settings are correct.

IPv4 configuration using SetIP (Linux)

Before using the SetIP program, disable the computer firewall from **System Preferences** or **Administrator**.

The following instructions may vary from your model or operating systems.

1 Download SetIP program from Samsung web site and extract it.

2 Double-click the **SetIPApplet.html** file in **cdroot/Linux/noarch/at_opt/share/utils** folder.

3 Click to open the TCP/IP configuration window.

4 Enter the machine's new information into the configuration window. In a corporate intranet, you may need to have this information assigned by a network manager before proceeding.

Find the machine's MAC address from the **Network Configuration Report** (see "Printing a network configuration report" on page 126) and enter it without the colons. For example, 00:15:99:29:51:A8 becomes 0015992951A8.

5 The machine will automatically print the **Network Configuration Report**.

Installing driver over the network

- Some features and optional goods may not be available depending on model or country (see "Features by models" on page 7).
- The machine that does not support the network interface, it will not be able to use this feature (see "Rear view" on page 19).
- You can install the printer driver and software when you insert the software CD into your CD-ROM drive.

  For windows, select the printer driver and software in the **Select Software to Install** window.

Installing driver over the network

Windows

1 Make sure that the machine is connected to the network and powered on. Also, your machine's IP address should have been set (see "Setting IP address" on page 126).

2 Insert the supplied software CD into your CD-ROM drive.

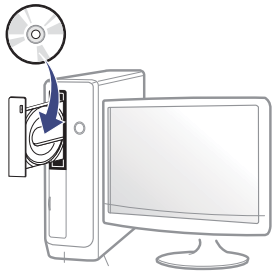

If the installation window does not appear, click **Start** > **All programs** > **Accessories** > **Run**.

X:**Setup.exe** replacing "X" with the letter, which represents your CD-ROM drive and click **OK**.

- For Windows 8,

  If the installation window does not appear, from **Charms**, select **Search** > **Apps** and search for **Run**. Type in X:\Setup.exe, replacing "X" with the letter that represents your CD-ROM drive and click **OK**.

  If "**Tap to choose what happens with this disc**." pop-up window appears, click the window and select **Run Setup.exe**.

3 Review and accept the installation agreements in the installation window. Then, click **Next**.

4 Select **Network connection** on the **Printer Connection Type** screen. Then, click **Next**.

5 Follow the instructions in the installation window.

From the Windows 8 Start Screen

- The V4 driver is automatically downloaded from the Windows Update if your computer is connected to the Internet. If not, you can manually download the V4 driver from Samsung website, www.samsung.com > find your product > Support or downloads.
- You can download **Samsung Printer Experience** app from the **Windows Store**. You need have a Microsoft account to use the Windows **Store**.
  - **a** From **Charms**, select **Search**.
  - **b** Click **Store**.
  - **c** Search and click **Samsung Printer Experience**.
  - **d** Click **Install**.
- If you install the driver using the supplied software CD, V4 driver is not installed. If you want to use the V4 driver in the **Desktop** screen, you can download from the Samsung website, www.samsung.com >find your product > Support or downloads.
- If you want to install Samsung's printer management tools, you need to install them using the supplied software CD.

Installing driver over the network

1 Make sure that the machine is connected to the network and powered on. Also, your machine's IP address should have been set (see "Setting IP address" on page 126).

2 From **Charms**, select **Settings** > **Change PC settings** > **Devices**.

3 Click **Add a device**.

Discovered machines will be shown on the screen.

4 Click the model name or host name you wish to use.

You can print a Network Configuration Report from the machine's control panel that will show the current machine's host name (see "Printing a network configuration report" on page 126).

5 The driver is automatically installed from the **Windows Update**.

Silent installation Mode

Silent installation mode is an installation method that does not require any user intervention. Once you start the installation, the machine driver and software are automatically installed on your computer. You can start the silent installation by typing **/s** or **/S** in the command window.

Command-line Parameters

Following table shows commands that can be used in the command window.

Following command-line are effective and operated when command is used with **/s** or **/S**. But **/h**, **/H** or **/?** are exceptional commands that can be operated solely.

Command- line	Definition	Description
/s or /S	Starts silent installation.	Installs machine drivers without prompting any UIs or user intervention.

Installing driver over the network

Command- line	Definition	Description
/p”<port name>” or /P”<port name>”	Specifies printer port. Network Port will be created by use of Standard TCP/IP Port monitor. For local port, this port must exist on system before being specified by command.	Printer port name can be specified as IP address, hostname, USB local port name, IEEE1284 port name or network path. For example: • /p”xxx.xxx.xxx.xxx” in where, “xxx.xxx.xxx.xxx” means IP address for network printer. /p”USB001”, /P”LPT1:”, /p”hostname” • /p"\\computer_name\shared_printer" or "\\xxx.xxx.xxx.xxx\shared_printer" in where, "\\computer_name\shared_printer" or "\\xxx.xxx.xxx.xxx\shared_printer" means the network path to the printer by entering two slashes, the computer name or local IP address of the PC sharing the printer, and then the share name of the printer.

Command- line	Definition	Description
/a”<dest_path>” or /A”<dest_path>”	Specifies destination path for installation. The destination path should be a fully qualified path.	Since machine drivers should be installed on the OS specific location, this command applies to only application software.
/n”<Printer name>” or /N”<Printer name>”	Specifies printer name. Printer instance shall be created as specified printer name.	With this parameter, you can add printer instances as your wishes.
/nd or /ND	Commands not to set the installed driver as a default machine driver.	It indicates installed machine driver will not be the default machine driver on your system if there are one or more printer drivers installed. If there is no installed machine driver on your system, then this option won’t be applied because Windows OS will set installed printer driver as a default machine driver.
/x or /X	Uses existing machine driver files to create printer instance if it is already installed.	This command provides a way to install a printer instance that uses installed printer driver files without installing an additional driver.

Installing driver over the network

Command- line	Definition	Description
/up”<printer name>” or /UP”<printer name>”	Removes only specified printer instance and not the driver files.	This command provides a way to remove only specified printer instance from your system without effecting other printer drivers. It will not remove printer driver files from your system.
/d or /D	Uninstalls all device drivers and applications from your system.	This command will remove all installed device drivers and application software from your system.
/v”<share name>” or /V”<share name>”	Shares installed machine and add other available platform drivers for Point & Print.	It will install all supported Windows OS platform’s machine drivers to system and share it with specified <share name> for point and print.
/o or /O	Opens **Printers and Faxes** folder after installation.	This command will open **Printers and Faxes** folder after the silent installation.
/h, /H or /?	Shows Command-line Usage.	

Mac

For Mac OS X 10.4, you need to download from the Samsung website to install the printer software (http://www.samsung.com > find your product > Support or Downloads).

1 Make sure that the machine is connected to your network and powered on.

2 Insert the supplied software CD into your CD-ROM drive.

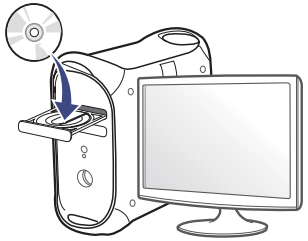

3 Double-click the CD-ROM icon that appears on your Mac desktop.

- For Mac OS X 10.8, Double-click the CD-ROM that appears on Finder.

4 Double-click the **MAC_Installer** folder > **Installer OS X** icon.

5 Click **Continue**.

6 Read the license agreement and click **Continue**.

Installing driver over the network

7 Click **Agree** to agree to the license agreement.

8 Click **Install**. All components necessary for machine operations will be installed.

If you click **Customize**, you can choose individual components to install.

9 Enter the password and click **OK**.

10 Select **Network Connected Printer(Wired or Wireless)** on the **Printer Connection Type** and click **Continue**.

11 Click **Add Printer** button to select your printer and add it to your printer list.

12 Click **IP** and Select HP Jetdirect - Socket in Protocol.

13 Enter the machine's IP address in the Address input field.

14 Enter the queue name in the Queue input field. If you cannot determine the queue name for your machine server, try using the default queue first.

15 if Auto Select does not work properly, choose Select Printer Software and your machine name in Print Using.

16 Click **Add**.

17 After the installation is finished, click **Close**.

Linux

You need to download Linux software packages from the Samsung website to install the printer software (http://www.samsung.com > find your product > Support or Downloads).

1 Make sure that the machine is connected to your network and powered on. Also, your machine's IP address should have been set.

2 Copy **Unified Linux Driver** package to your system.

3 Open Terminal program and go to the folder that you copied the package to.

4 Extract the package.

5 Move to **uld** folder.

6 Execute " **./install.sh**" command (If you are not logged in as root, execute the command with "**sudo**" as "**sudo ./install.sh**").

7 Proceed with installation.

8 When installation finished, launch **Printing** utility (Go to **System** > **Administration** > **Printing** or execute "**system-config-printer**" command in Terminal program).

Installing driver over the network

9 Click **Add** button.

10 Select **AppSocket/HP JetDirect** and enter your machine's IP address.

11 Click **Forward** button and add it to your system.

Add a network printer

1 Double-click the **Unified Driver Configurator**.

2 Click **Add Printer.**

3 The **Add printer wizard** window opens. Click **Next**.

4 Select **Network printer** and click the **Search** button.

5 The printer's IP address and model name appears on list field.

6 Select your machine and click **Next**.

7 Enter the printer description and click **Next**.

8 After the machine is added, click **Finish**.

UNIX

- Make sure your machine supports the UNIX operating system before installing the UNIX printer driver (see "Operating System" on page 7).
- The commands are marked with "", when typing the commands, do not type "".
- Some features and optional goods may not be available depending on model or country (see "Operating System" on page 7).

To use the UNIX printer driver, you have to install the UNIX printer driver package first, then setup the printer. You can download the UNIX printer driver package from the Samsung website (http://www.samsung.com > find your product > Support or Downloads).

Installing the UNIX printer driver package

The installation procedure is common for all variants of UNIX OS mentioned.

1 From the Samsung website, download and unpack the UNIX Printer Driver package to your computer.

2 Acquire root privileges.

"**su -**"

3 Copy the appropriate driver archive to the target UNIX computer.

Installing driver over the network

See administration guide of your UNIX OS for details.

4 Unpack the UNIX printer driver package.

For example, on IBM AIX, use the following commands.

"**gzip -d** < enter the package name **| tar xf -**"

5 the unpacked directory.

6 Run the install script.

"**./install –i**"

install is the installer script file which is used to install or uninstall the UNIX Printer Driver package.

Use "**chmod 755 install**" command to give the permission to the installer script.

7 Execute the "**. /install –c**" command to verify installation results.

8 Run "**installprinter**" from the command line. This will bring up the **Add Printer Wizard** window. Setup the printer in this window referring to the following procedures.

On some UNIX OS, for example on Solaris 10, just added printers may not be enabled and/or may not accept jobs. In this case run the following two commands on the root terminal:

"**accept <printer_name>**"

"**enable <printer_name>**"

Uninstalling the printer driver package

The utility should be used to delete the printer installed in the system.

a Run "**uninstallprinter**" command from the terminal.
It will open the **Uninstall Printer Wizard**.
The installed printers are listed in the drop-down list.

b Select the printer to be deleted.

c Click **Delete** to delete the printer from the system.

d Execute the "**. /install –d**" command to uninstall the whole package.

e To verify removal results, execute the "**. /install –c**" command.

To re-install it, use the command "**. /install –i**" to reinstall the binaries.

Installing driver over the network

Setting up the printer

To add the printer to your UNIX system, run 'installprinter' from the command line. This will bring up the Add Printer Wizard window. Setup the printer in this window according to the following steps:

1. Type the name of the printer.
2. Select the appropriate printer model from the model list.
3. Enter any description corresponding to the type of the printer in the **Type** field. This is optional.
4. Specify any printer description in the **Description** field. This is optional.
5. Specify the printer location in the **Location** field.
6. Type the IP address or DNS name of the printer in the **Device** textbox for network-connected printers. On IBM AIX with **jetdirect Queue type**, only the DNS name is possible-numeric IP address is not allowed.
7. **Queue type** shows the connection as **lpd** or **jetdirect** in the corresponding list box. Additionally, **usb** type is available on Sun Solaris OS.
8. Select **Copies** to set the number of copies.
9. Check the **Collate** option to receive copies already sorted.
10. Check the **Reverse Order** option to receive copies in the reverse order.
11. Check the **Make Default** option to set this printer as default.
12. Click **OK** to add the printer.

IPv6 configuration

IPv6 is supported properly only in Windows Vista or higher.

Some features and optional goods may not be available depending on model or country (see "Features by models" on page 7 or "Machine overview" on page 17).

The machine supports the following IPv6 addresses for network printing and managements.

- **Link-local Address**: Self-configured local IPv6 address (Address starts with FE80).
- **Stateless Address**: Automatically configured IPv6 address by a network router.
- **Stateful Address**: IPv6 address configured by a DHCPv6 server.
- **Manual Address**: Manually configured IPv6 address by a user.

In the IPv6 network environment, follow the next procedure to use the IPv6 address.

From the control panel

Activating IPv6

- Accessing menus may differ from model to model (see "Menu overview" on page 27).
- It may be necessary to press **OK** to navigate to lower-level menus for some models.

1. Select (**Setup**)> **Machine Setup** > **Next** > **Network Setup** > **TCP/IP (IPv6)** > **IPv6 Protocol** on the touch screen.
2. Select **On** using arrows on the touch screen.
3. Turn the machine off and turn it on again.

When you install the printer driver, do not configure both IPv4 and IPv6. We recommend to configure either IPv4 or IPv6.

DHCPv6 address configuration

If you have a DHCPv6 server on your network, you can set one of the following options for default dynamic host configuration.

IPv6 configuration

- Accessing menus may differ from model to model (see "Menu overview" on page 27).
- It may be necessary to press **OK** to navigate to lower-level menus for some models.

1 Select (**Setup**) > **Machine Setup** > **Next** > **Network Setup** > **TCP/IP (IPv6)** > **DHCPv6 Config** on the touch screen.

2 Select the option you want using arrows and press (back) to save the selection.

- **Router**: Use DHCPv6 only when requested by a router.
- **Always Use**: Always use DHCPv6 regardless of router request.
- **Never Use**: Never use DHCPv6 regardless of router request.

From the SyncThru™ Web Service

Activating IPv6

1 Access a web browser, such as Internet Explorer, from Windows. Enter the machine IP address (http://xxx.xxx.xxx.xxx) in the address field and press the Enter key or click **Go**.

2 If it's your first time logging into **SyncThru™ Web Service** you need to log-in as an administrator. Type in the below default ID and password. We recommend you to change the default password for security reasons.

- **ID: admin**
- **Password: sec00000**

3 When the **SyncThru™ Web Service** window opens, move the mouse cursor over the **Settings** of the top menu bar and then click **Network Settings**.

4 Click **TCP/IPv6** on the left pane of the website.

5 Check the **IPv6 Protocol** check box to activate IPv6.

6 Click the **Apply** button.

7 Turn the machine off and turn it on again.

IPv6 configuration

- You can also set the DHCPv6.
- To manually set the IPv6 address:
  Check the **Manual Address** check box. Then, the **Address/Prefix** text box is activated. Enter the rest of the address (e.g.,:3FFE:10:88:194::**AAAA**. “A” is the hexadecimal 0 through 9, A through F).

Address must be enclosed in '[ ]' brackets.

IPv6 address configuration

1 Start a web browser, such as Internet Explorer, that supports IPv6 addressing as a URL.

2 Select one of the IPv6 addresses (**Link-local Address**, **Stateless Address**, **Stateful Address**, **Manual Address**) from **Network Configuration Report** (see "Printing a network configuration report" on page 126).

- **Link-local Address**: Self-configured local IPv6 address (Address starts with FE80).
- **Stateless Address**: Automatically configured IPv6 address by a network router.
- **Stateful Address**: IPv6 address configured by a DHCPv6 server.
- **Manual Address**: Manually configured IPv6 address by a user.

3 Enter the IPv6 addresses (e.g.,: http://[FE80::215:99FF:FE66:7701]).

Wireless network setup

- Make sure your machine supports wireless networking. Wireless networking may not be available depending on the model (see "Features by models" on page 7).
- If the IPv6 network seems to not be working, set all the network settings to the factory defaults and try again using **Clear Setting**.

Getting started

Understanding your network type

Typically, you can only have one connection between your computer and the machine at a time.

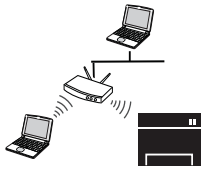	**Infrastructure mode** This is an environment generally used for homes and SOHOs (Small Office/ Home Office). This mode uses an access point to communicate with the wireless machine.
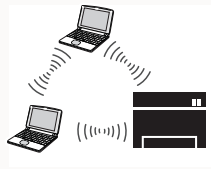	**Ad hoc mode** This mode does not use an access point. The wireless computer and wireless machine communicate directly.

Wireless network name and network password

Wireless networks require higher security, so when an access point is first set up, a network name (SSID), the type of security used, and a Network Password are created for the network. Ask your network administrator about this information before proceeding with the machine installation.

Wireless network setup

Introducing wireless set up methods

You can set wireless settings either from the machine or the computer. Choose the setting method from the below table.

- Some wireless network installation types may not be available depending on the model or country.
- If problems occur during wireless set up or driver installation, refer to the troubleshooting chapter (see "Troubleshooting for wireless network" on page 163).
- It is strongly recommended that you set the password on Access Points. If you do not set the password on Access Points, they might be exposed to illegal access from unknown machines including PCs, smart phones and printers. Refer to the Access Point user' guide for password settings.

Set up method	Connecting method	Description & Reference
With Access Point	**From the computer**	Windows user, see "Access point via USB cable (recommended)" on page 148.
		Mac user, see "Access point via USB cable (recommended)" on page 153.
		See "Using a network cable" on page 158.
	From the machine's control panel	• See "Machines with a display screen" on page 144. • See "Machines without a display screen" on page 145.
		See "Using the menu button" on page 147.
Without Access Point	**From the computer**	Windows user, see "Ad hoc via USB cable" on page 150.
		Mac user, see "Ad hoc via USB cable" on page 165.
	Wi-Fi Direct setup	See "Setting the Wi-Fi Direct for mobile printing" on page 161.

Wireless network setup

Using the WPS

If your machine and an access point (or wireless router) support Wi-Fi Protected Setup™ (WPS), you can easily configure the wireless network settings by pressing the (WPS) on the touch screen without a computer.

- If you want to use the wireless network using the infrastructure mode, make sure that the network cable is disconnected from the machine. Using the **WPS (PBC)** button or entering the PIN from the computer to connect to the access point (or wireless router) varies depending on the access point (or wireless router) you are using. Refer to the user's guide of the access point (or wireless router) you are using.
- When using the WPS button to set the wireless network, security settings may change. To prevent this, lock the WPS option for the current wireless security settings. The option name may differ depending on the access point (or wireless router) you are using.

Items to prepare

- Check if the access point (or wireless router) supports Wi-Fi Protected Setup™ (WPS).
- Check if your machine supports Wi-Fi Protected Setup™ (WPS).
- Networked computer (PIN mode only)

Choosing your type

There are two methods available to connect your machine to a wireless network using the (WPS) on the touch screen.

The **Push Button Configuration (PBC)** method allows you to connect your machine to a wireless network by pressing both the (WPS) on the touch screen of your machine and the WPS (PBC) button on a Wi-Fi Protected Setup™ WPS-enabled access point (or wireless router) respectively.

The **Personal Identification Number (PIN)** method helps you connect your machine to a wireless network by entering the supplied PIN information on a Wi-Fi Protected Setup™ WPS-enabled access point (or wireless router).

Factory default in your machine is **PBC** mode, which is recommended for a typical wireless network environment.

Wireless network setup

Machines with a display screen

Connecting in PBC mode

1 Select (**Menu**) > **Network** > **Wi-Fi** > **WPS Setting** on the control panel.

OR

For the model with a touch screen, press (**Setup**) > **Machine Setup** > **Next** > **Network Setup** > **Wireless** > **WPS Settings**.

OR

For models that have the (WPS) button on the control panel, press and hold the (WPS) button on the control panel for more than 2 seconds.

2 Press **PBC** (or **Connect via PBC**).

3 Press **OK** when the confirmation window appears.

Information window appears showing 2 minutes connection processing time.

4 Press the **WPS (PBC)** button on the access point (or wireless router).

The messages are displayed on the display screen in the order below:

a **Connecting:** The machine is connecting to the access point (or wireless router).

b **Connected:** When the machine is successfully connected to the wireless network, the WPS LED light stays on.

c **AP SSID:** After completing the wireless network connection process, the AP's SSID information appears on the display.

5 Insert the supplied software CD into your CD-ROM drive, and follow the instructions in the window to set up the wireless network.

Connecting in PIN mode

1 Select (**Menu**) > **Network** > **Wi-Fi** > **WPS Setting** on the control panel.

OR

For the model with a touch screen, press (**Setup**) > **Machine Setup** > **Next** > **Network Setup** > **Wireless** > **WPS Settings**.

OR

For models that have the (WPS) button on the control panel, press and hold the (WPS) button on the control panel for more than 4 seconds.

2 Press **PIN** (or **Connect via PIN**).

3 Press **OK** when the confirmation window appears.

4 The eight-digit PIN appears on the display.

You need to enter the eight-digit PIN within two minutes on the computer that is connected to the access point (or wireless router).

The messages are displayed on the display screen in the order below:

a **Connecting:** The machine is connecting to the wireless network.

b **Connected:** When the machine is successfully connected to the wireless network, the WPS LED light stays on.

c **SSID Type:** After completing the wireless network connection process, the AP's SSID information is displayed on the LCD display.

5 Insert the supplied software CD into your CD-ROM drive, and follow the instructions in the window to set up the wireless network.

Machines without a display screen

Connecting in PBC mode

1 Press and hold the (WPS) button on the control panel for about 2 - 4 seconds until the status LED blinks quickly.

The machine starts connecting to the wireless network. The LED blinks slowly for up to two minutes until you press the PBC button on the access point (or wireless router).

2 Press the **WPS (PBC)** button on the access point (or wireless router).

a The light blinks fast on the WPS LED. The machine is connecting to the access point (or wireless router).

b When the machine is successfully connected to the wireless network, the WPS LED light stays on.

3 Insert the supplied software CD into your CD-ROM drive, and follow the instructions in the window to set up the wireless network.

Wireless network setup

Connecting in PIN mode

1 The network configuration report, including PIN, must be printed (see "Printing a network configuration report" on page 126).

In ready mode, press and hold the (**Stop**) button on the control panel for about 5 seconds. You can find your machine's PIN.

2 Press and hold the (WPS) button on the control panel for more than 4 seconds until the status LED stays on.

The machine starts connecting to the access point (or wireless router).

3 You need to enter the eight-digit PIN within two minutes on the computer that is connected to the access point (or wireless router).

The LED blinks slowly for up to two minutes until you enter the eight-digit PIN.

The WPS LED blinks in the order below:

a The light blinks fast on the WPS LED. The machine is connecting to the access point (or wireless router).

b When the machine is successfully connected to the wireless network, the WPS LED light stays on.

4 Insert the supplied software CD into your CD-ROM drive, and follow the instructions in the window to set up the wireless network.

Re-connecting to a network

When the wireless function is off, the machine automatically tries to re-connect to the access point (or wireless router) with the previously used wireless connection settings and address.

In the following cases, the machine automatically re-connects to the wireless network:

- The machine is turned off and on again.
- The access point (or wireless router) is turned off and on again.

Canceling the connection process

To cancel the wireless network connection when the machine is connecting to the wireless network, press and release the (**Stop**) on the control panel. **You need to wait 2 minutes to re-connect to the wireless network.**

Wireless network setup

Disconnecting from a network

To disconnect the wireless network connection, press the (WPS) button on the control panel for more than two seconds.

- **When the Wi-Fi network is in idle mode:** The machine is immediately disconnected from the wireless network and the WPS LED turns off.
- **When the Wi-Fi network is being used:** While the machine waits until the current job is finished, the light blinks fast on the WPS LED. Then, the wireless network connection is automatically disconnected and the WPS LED turns off.

Using the menu button

Some menus may not appear in the display depending on options or models. If so, it is not applicable to your machine (see "Menu overview" on page 27).

Before starting, you will need to know the network name (SSID) of your wireless network and the network key if it is encrypted. This information was set when the access point (or wireless router) was installed. If you do not know about your wireless environment, please ask the person who set up your network.

After completing the wireless network connection, you need to install a machine driver to print from an application (see "Installing driver over the network" on page 129).

1. Press the (**Menu**) button on the control panel.
2. Press **Network** > **Wireless** > **WLAN Settings**.
3. Press the **OK** to select the setup method you want.
   - **Wizard** (recommended)**:** In this mode, the setup is automatic. The machine will display a list of available networks from which to choose. After a network is chosen then printer will prompt for the corresponding security key.
   - **Custom:** In this mode, users can give or edit manually their own SSID , or choose the security option in detail.

Setup using Windows

Shortcut to the **Samsung Easy Wireless Setup** program without the CD: If you have installed the printer driver once, you can access the **Samsung Easy Wireless Setup** program without the CD (see "Accessing management tools" on page 228).

Wireless network setup

Access point via USB cable (recommended)

Items to prepare

- Access point
- Network-connected computer
- Software CD that was provided with your machine
- A machine installed with a wireless network interface
- USB cable

Creating the infrastructure network

1 Check whether the USB cable is connected to the machine.

2 Turn on your computer, access point, and machine.

3 Insert the supplied software CD into your CD-ROM drive.

If the installation window does not appear, click **Start** > **All programs** > **Accessories** > **Run**.

X:**Setup.exe** replacing “X” with the letter, which represents your CD-ROM drive and click **OK**.

- For Windows 8,

  If the installation window does not appear, from **Charms**, select **Search** > **Apps** and search for **Run**. Type in X:\Setup.exe, replacing “X” with the letter that represents your CD-ROM drive and click **OK**.

  If “**Tap to choose what happens with this disc**.” pop-up window appears, click the window and select **Run Setup.exe**.

4 Review and accept the installation agreements in the installation window. Then, click **Next**.

Wireless network setup

5 Select **Wireless network connection** on the **Printer Connection Type** screen. Then, click **Next**.

6 On the **Are you setting up your printer for the first time?** screen, select **Yes, I will set up my printer's wireless network.** Then, click **Next**.

If your printer is already connected on the network, select **No, my printer is already connected to my network**.

7 After searching, the window shows the wireless network devices. Select the name (SSID) of the access point you want to use and click **Next**.

If you cannot find the network name you want to choose, or if you want to set the wireless configuration manually, click **Advanced Setting**.

- **Enter the wireless Network Name:** Enter the SSID of the access point (SSID is case-sensitive).
- **Operation Mode:** Select **Infrastructure**.
- **Authentication:** Select an authentication type.

  Open System: Authentication is not used, and encryption may or may not be used, depending on the need for data security.

  Shared Key: Authentication is used. A device that has a proper WEP key can access the network.

  WPA Personal or WPA2 Personal: Select this option to authenticate the print server based on a WPA Pre-Shared Key. This uses a shared secret key (generally called Pre Shared Key pass phrase), which is manually configured on the access point and each of its clients.
- **Encryption:** Select the encryption (None, WEP64, WEP128, TKIP, AES, TKIP AES).
- **Network Password:** Enter the encryption network password value.
- **Confirm Network Password:** Confirm the encryption network password value.
- **WEP Key Index:** If you are using WEP Encryption, select the appropriate **WEP Key Index**.

The wireless network security window appears when the access point has security settings.

Enter the Network Password of the access point (or router).

Wireless network setup

8 When the network connection window appears, disconnect the network cable. Then, click **Next**. The network cable connection can interfere with searching for wireless devices.

9 If your printer supports Wi-Fi Direct and this function is disabled, its corresponding screen will appears.

If you want to enable Wi-Fi Direct, check the checkbox, and click **Next**. If not, click just **Next**.

- Can start to build Wi-Fi Direct by using Samsung Easy Printer Manager (see "Setting up Wi-Fi Direct" on page 161).
- **Wi-Fi Direct Name**: The default Wi-Fi Direct Name is the model name and the maximum length is 22 characters.
- **Password setting** is the numeric string, and the size is 8 ~ 64 characters.

10 When the wireless network set up is completed, disconnect the USB cable between the computer and machine. Click **Next**.

11 Follow the instructions in the installation window.

Ad hoc via USB cable

If you do not have an access point (AP), you may still connect the machine wirelessly to your computer by setting up an Ad-hoc wireless network by following the simple steps below.

Items to prepare

- Network-connected computer
- Software CD that was provided with your machine
- A machine installed with a wireless network interface
- USB cable

Creating the ad hoc network in Windows

1 Check wheter the USB cable is connected to the machine.

2 Turn on your computer, access point, and machine.

Wireless network setup

3 Insert the supplied software CD into your CD-ROM drive.

If the installation window does not appear, click **Start** > **All programs** > **Accessories** > **Run**.

X:**Setup.exe** replacing "X" with the letter, which represents your CD-ROM drive and click **OK**.

- For Windows 8,

  If the installation window does not appear, from **Charms**, select **Search** > **Apps** and search for **Run**. Type in X:\Setup.exe, replacing "X" with the letter that represents your CD-ROM drive and click **OK**.

  If "**Tap to choose what happens with this disc**." pop-up window appears, click the window and select **Run Setup.exe**.

4 Review and accept the installation agreements in the installation window. Then, click **Next**.

5 Select **Wireless network connection** on the **Printer Connection Type** screen. Then, click **Next**.

6 On the **Are you setting up your printer for the first time?** screen, select **Yes, I will set up my printer's wireless network.** Then, click **Next**.

If your printer is already connected on the network, select **No, my printer is already connected to my network**.

7 After searching the wireless networks, a list of wireless networks your machine has searched appears. Click **Advanced Setting**.

- **Enter the wireless Network Name:** Enter the SSID name you want (SSID is case-sensitive).
- **Operation Mode:** Select ad hoc.
- **Channel:** Select the channel. (**Auto Setting** or 2412 MHz to 2467 MHz).

- **Authentication:** Select an authentication type.

  Open System: Authentication is not used, and encryption may or may not be used, depending on the need for data security.

  Shared Key: Authentication is used. A device that has a proper WEP key can access the network.
- **Encryption:** Select the encryption (None, WEP64, WEP128).
- **Network Password:** Enter the encryption network password value.
- **Confirm Network Password:** Confirm the encryption network password value.
- **WEP Key Index:** If you are using WEP Encryption, select the appropriate **WEP Key Index**.

The wireless network security window appears when the ad hoc network has security enabled.

Select **Open System** or **Shared Key** for the authentication and click **Next**.

- WEP (Wired Equivalent Privacy) is a security protocol preventing unauthorized access to your wireless network. WEP encrypts the data portion of each packet exchanged on a wireless network using a 64-bit or 128-bit WEP encryption key.

8 The window showing the wireless network setting appears. Check the settings and click **Next**.

Before entering the IP address for the machine, you must know the computer's network configuration information. If the computer's network configuration is set to DHCP, the wireless network setting should also be DHCP. Likewise, if the computer's network configuration is set to Static, the wireless network setting should also be Static.

If your computer is set to DHCP and you want to use the Static wireless network setting, you must contact the network administrator to get the static IP address.

- **For the DHCP method**

  If the IP address assignment method is DHCP, check if DHCP is shown in the **Wireless Network Setting Confirm** window. If it shows Static, click **Change TCP/IP** to change the assignment method to **Receive IP address automatically (DHCP)**.
- **For the Static method**

  If the IP address assignment method is Static, check if Static is shown in the **Wireless Network Setting Confirm** window. If it shows DHCP, click **Change TCP/IP** to enter the IP address and other network configuration values for the machine.

  For example,

  If the computer's network information is as shown follows:

  - IP address: 169.254.133.42
  - Subnet Mask: 255.255.0.0

  Then, the machine's network information should be as below:

  - IP address: 169.254.133.**43**
  - Subnet Mask: 255.255.0.0 (Use the computer's subnet mask.)
  - Gateway: 169.254.133.**1**

Wireless network setup

9 The **Wireless Network Setting Complete** window appears. Click **Next**.

10 When the wireless network settings are completed, disconnect the USB cable between the computer and machine. Click **Next**.

11 Follow the instructions in the installation window.

Setup using Mac

Items to prepare

- Access point
- Network-connected computer
- Software CD that was provided with your machine
- A machine installed with a wireless network interface
- USB cable

Access point via USB cable (recommended)

1 Make sure that the machine is connected to your computer and powered on.

2 Insert the supplied software CD into your CD-ROM drive.

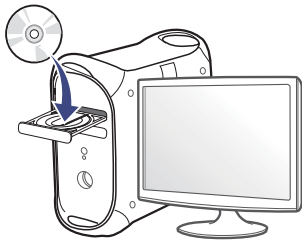

3 Double-click the CD-ROM icon that appears on your Mac desktop.

- For Mac OS X 10.8, double-click the CD-ROM that appears on **Finder**.

4 Double-click the **MAC_Installer** folder > **Installer OS X** icon.

5 Click **Continue**.

6 Read the license agreement and click **Continue**.

7 Click **Agree** to agree to the license agreement.

8 Click **Install**. All components necessary for machine operations will be installed.

If you click **Customize**, you can choose individual components to install.

Wireless network setup

9 Enter the password and click **OK**.

10 Select **Configuration of Wireless network** on the **Printer Connection Type** and click **Continue**.

11 After searching, the window shows the wireless network devices. Select the name (SSID) of the access point you want to use and click **Next**.

When you set the wireless configuration manually, click **Advanced Setting**.

- **Enter the wireless Network Name:** Enter the SSID of the access point (SSID is case-sensitive).
- **Operation Mode:** Select **Infrastructure**.
- **Authentication:** Select an authentication type.

  Open System: Authentication is not used, and encryption may or may not be used, depending on the need for data security.

  Shared Key: Authentication is used. A device that has a proper WEP key can access the network.

  WPA Personal or WPA2 Personal: Select this option to authenticate the print server based on the WPA Pre-Shared Key. This uses a shared secret key (generally called Pre Shared Key pass phrase) that is manually configured on the access point and each of its clients.
- **Encryption:** Select the encryption. (None, WEP64, WEP128, TKIP, AES, TKIP, AES)
- **Network Password:** Enter the encryption network password value.
- **Confirm Network Password:** Confirm the encryption network password value.
- **WEP Key Index:** If you are using WEP Encryption, select the appropriate **WEP Key Index**.

The wireless network security window appears when the access point has security enabled.

Enter the Network Password of the access point (or router).

Wireless network setup

12 If your printer supports Wi-Fi Direct and this function is disabled, its corresponding screen will appears.

If you want to enable Wi-Fi Direct, check the checkbox, and click **Next**. If not, click just **Next**.

- Can start to build Wi-Fi Direct by using Samsung Easy Printer Manager (see "Setting up Wi-Fi Direct" on page 161).
- **Wi-Fi Direct Name**: The default Wi-Fi Direct Name is the model name and the maximum length is 22 characters.
- **Password setting** is the numeric string, and the size is 8 ~ 64 characters.

13 When the wireless network settings are completed, disconnect the USB cable between the computer and machine.

14 Wireless network set up is completed. After the installation is finished, click **Quit**.

After completing the wireless network connection, you need to install a machine driver to print from an application (see "Installation for Mac" on page 120).

Ad hoc via USB cable

If you do not have an access point (AP), you may still connect the machine wirelessly to your computer by setting up an ad hoc wireless network by following these simple directions.

Items to prepare

- Network-connected computer
- Software CD that was provided with your machine
- A machine installed with a wireless network interface
- USB cable

Wireless network setup

Creating the ad hoc network in Mac

1 Make sure that the machine is connected to your computer and powered on.

2 Insert the supplied software CD into your CD-ROM drive.

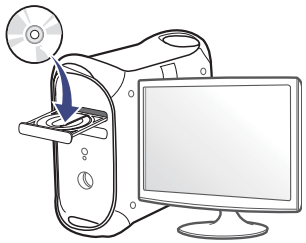

3 Double-click the CD-ROM icon that appears on your Mac desktop.

- For Mac OS X 10.8, double-click the CD-ROM that appears on **Finder**.

4 Double-click the **MAC_Installer** folder > **Installer OS X** icon.

5 Click **Continue**.

6 Read the license agreement and click **Continue**.

7 Click **Agree** to agree to the license agreement.

8 Click **Install**. All components necessary for machine operations will be installed.

If you click **Customize**, you can choose individual components to install.

9 Enter the password and click **OK**.

10 Select **Configuration of Wireless network** on the **Printer Connection Type** and click **Continue**.

11 After searching the wireless networks, a list of wireless networks your machine has searched appears. Click **Advanced Setting**.

- **Enter the wireless Network Name:** Enter the SSID name (SSID is case-sensitive).
- **Operation Mode:** Select ad hoc.
- **Channel:** Select the channel (**Auto Setting** or 2412 MHz to 2467 MHz).

- **Authentication:** Select an authentication type.

  Open System: Authentication is not used, and encryption may or may not be used, depending on the need for data security.

  Shared Key: Authentication is used. A device that has a proper WEP key can access the network.
- **Encryption:** Select the encryption (None, WEP64, WEP128).
- **Network Password:** Enter the encryption network password value.
- **Confirm Network Password:** Confirm the encryption network password value.
- **WEP Key Index:** If you are using WEP Encryption, select the appropriate **WEP Key Index**.

The wireless network security window appears when the ad hoc network has security setting.

Select **Open System** or **Shared Key** for the authentication and click **Next**.

- WEP (Wired Equivalent Privacy) is a security protocol preventing unauthorized access to your wireless network. WEP encrypts the data portion of each packet exchanged on a wireless network using a 64-bit or 128-bit WEP encryption key.

12 The window showing the wireless network settings appears. Check the settings and click **Next**.

Before entering the IP address for the machine, you must know the computer's network configuration information. If the computer's network configuration is set to DHCP, the wireless network setting should also be DHCP. Likewise, if the computer's network configuration is set to Static, the wireless network setting should also be Static.

If your computer is set to DHCP and you want to use Static wireless network setting, you must contact the network administrator to get the static IP address.

- **For the DHCP method**

  If the IP address assignment method is DHCP, check if DHCP is shown in the **Wireless Network Setting Confirm** window. If it shows Static, click **Change TCP/IP** to change the assignment method to **Receive IP address automatically (DHCP)**.
- **For the Static method**

  If the IP address assignment method is Static, check if Static is shown in the **Wireless Network Setting Confirm** window. If it shows DHCP, click **Change TCP/IP** to enter the IP address and other network configuration values for the machine.

  For example,

  If the computer's network information is shown as follows:

  - IP address: 169.254.133.42
  - Subnet Mask: 255.255.0.0

  Then, the machine's network information should be as shown below:

  - IP address: 169.254.133.**43**
  - Subnet Mask: 255.255.0.0 (Use the computer's subnet mask.)
  - Gateway: 169.254.133.**1**

Wireless network setup

13 When the window that tells you that the network cable connection is confirmed appears, disconnect the network cable and click **Next**.

If the network cable is connected, it may have trouble finding the machine when configuring the wireless network.

14 The wireless network connects according to the network configuration.

15 Wireless network set up is completed. After installation is finished, click **Quit**.

After completing the wireless network connection, you need to install a machine driver to print from an application (see "Installation for Mac" on page 120).

Using a network cable

Machines that do not support the network port will not be able to use this feature (see "Rear view" on page 19).

Your machine is a network compatible machine. To enable your machine to work with your network, you will need to perform some configuration procedures.

- After completing the wireless network connection, you need to install a machine driver to print from an application (see "Installing driver over the network" on page 129).
- See your network administrator, or the person that set up your wireless network, for information about your network configuration.

Items to prepare

- Access point
- Network-connected computer
- Software CD that was provided with your machine
- A machine installed with a wireless network interface
- Network cable

Printing a network configuration report

You can identify the network settings of your machine by printing a network configuration report.

See "Printing a network configuration report" on page 126.

Wireless network setup

IP setting using SetIP Program (Windows)

This program is used to manually set the network IP address of your machine using its MAC address to communicate with the machine. The MAC address is the hardware serial number of the network interface and can be found in the **Network Configuration Report**.

See "Setting IP address" on page 126.

Configuring the machine's wireless network

Before starting you will need to know the network name (SSID) of your wireless network and the network key if it is encrypted. This information was set when the access point (or wireless router) was installed. If you do not know about your wireless environment, please ask the person who set up your network.

To configure wireless parameters, you can use **SyncThru™ Web Service**.

Using SyncThru™ Web Service

Before starting wireless parameter configuration, check the cable connection status.

1. Check whether or not the network cable is connected to the machine. If not, connect the machine with a standard network cable.
2. Start a web browser such as Internet Explorer, Safari, or Firefox and enter your machine's new IP address in the browser window.

   For example,

3. Click **Login** on the upper right of the SyncThru™ Web Service website.
4. Type in the **ID** and **Password** then click **Login**. We recommend you to change the default password for security reasons.
   - **ID: admin**
   - **Password: sec00000**
5. When the **SyncThru™ Web Service** window opens, click **Network Settings**.
6. Click **Wireless** > **Wizard**.

Wizard will help you setup the wireless network configuration. However, if you want to set the wireless network directly, select **Custom**.

Wireless network setup

7 Select the one **Network Name(SSID)** in the list.

- **SSID**: SSID (Service Set Identifier) is a name that identifies a wireless network, access points, and wireless devices attempting to connect to a specific wireless network must use the same SSID. The SSID is case sensitive.
- **Operation Mode**: **Operation Mode** refers to the type of wireless connections.
  - **Ad-hoc**: Allows wireless devices to communicate directly with each other in a peer-to-peer environment.
  - **Infrastructure**: Allows wireless devices to communicate with each other through an access point.

If your network's **Operation Mode** is **Infrastructure**, select the SSID of the access point. If the **Operation Mode** is **Ad-hoc**, select the machine's SSID.

8 Click **Next**.

If the wireless security setting window appears, enter the registered password (network password) and click **Next**.

9 The confirmation window appears, please check your wireless setup. If the setup is right, click **Apply**.

Disconnect the network cable (standard or network). Your machine should then start communicating wirelessly with the network. In case of Ad-hoc mode, you can use a wireless LAN and wired LAN simultaneously.

10 Insert the supplied software CD into your CD-ROM drive, and follow the instructions in the window to set up the wireless network.

Turning the Wi-Fi network on/off

If your machine has a display, you can also turn on/off the Wi-Fi from the machine's control panel using the **Network** menu.

1 Check whether the network cable is connected to the machine. If not, connect the machine with a standard network cable.

2 Start a web browser such as Internet Explorer, Safari, or Firefox and enter your machine's new IP address in the browser window.

For example,

3 Click **Login** on the upper right of the SyncThru™ Web Service website.

Wireless network setup

4 Type in the **ID** and **Password**, then click **Login**. We recommend you to change the default password for security reasons.

- **ID: admin**
- **Password: sec00000**

5 When the **SyncThru™ Web Service** window opens, click **Network Settings**.

6 Click **Wireless** > **Custom**.

You can also turn the Wi-Fi network on/off.

Setting the Wi-Fi Direct for mobile printing

Wi-Fi Direct is an easy-to-setup peer-to-peer connection method between the Wi-Fi Direct certified printer and a mobile device that provides a secure connection and better throughput than ad hoc mode.

With Wi-Fi Direct, you can connect your printer to a Wi-Fi Direct network while concurrently connecting to an access point. You can also use a wired network and a Wi-Fi Direct network simultaneously so multiple users can access and print documents both from Wi-Fi Direct and from a wired network.

- You cannot connect your mobile device to the internet through the printer's Wi-Fi Direct.
- The supported protocol list may differ from your model, Wi-Fi Direct networks do NOT support IPv6, network filtering, IPSec, WINS, and SLP services.
- The maximum number of devices that can be connected via Wi-Fi Direct is 3.

Setting up Wi-Fi Direct

You can enable Wi-Fi Direct feature by one of the following methods.

From the USB cable-connected computer(recommended)

After the driver installation is complete, Samsung Easy Printer Manager can be used to change Wi-Fi Direct settings.

Samsung Easy Printer Manager is Available for Windows and Mac OS users only.

- From the **Start** menu, select **Programs** or **All Programs** > **Samsung Printers** > Samsung Easy Printer Manager > **Device Settings** > **Network**.
  - **Wi-Fi Direct On/Off**: Select **On** to enable.

- **Device Name**: Enter the printer's name for searching for your printer on a wireless network. By default, the device name is the model name.
- **IP Address**: Enter the IP address of the printer. This IP address is used only for the local network and not for the infrastructure wired or wireless network. We recommend using the default local IP address (the default local IP address of the printer for Wi-Fi Direct is 192.168.3.1)
- **Group Owner**: Activate this option to assign the printer the Wi-Fi Direct group's owner. The **Group Owner** acts similar to a wireless access point. We recommend activating this option.
- **Network Password**: If your printer is a **Group Owner**, a **Network Password** is required for other mobile devices to connect to your printer. You can configure a network password yourself, or can remember the given Network Password that is randomly generated by default.

From the machine (Machines with a display screen)

Accessing menus may differ from model to model (see "Accessing the menu" on page 27).

- Select **Setup**> **Machine Setup** >**Next** > **Network Setup** > **Wireless** > **Wi-Fi Direct** on the touch screen.
- Enable **Wi-Fi Direct**.

From the network-connected computer

If your printer is using a network cable or a wireless access point, you can enable and configure Wi-Fi Direct from SyncThru™ Web Service.

- Access **SyncThru™ Web Service**, select **Settings** > **Network Settings** > **Wireless** > **Wi-Fi Direct**.
- Enable or disable **Wi-Fi Direct** and set other options.

- For Linux OS users,
  - Print an IP network configuration report to check the output (see "Printing a network configuration report" on page 126).
  - Access **SyncThru Web Service**, select **Settings** > **Network Settings** > **Wireless** > **Wi-Fi Direct**.
  - Enable or disable **Wi-Fi Direct**.

Setting up the mobile device

- After setting up Wi-Fi Direct from the printer, refer to the user manual of the mobile device you are using to set its Wi-Fi Direct.
- After setting up Wi-Fi Direct, you need to download the mobile printing application (For example: Samsung Mobile printer) to print from your smartphone.

Wireless network setup

- When you have found the printer you want to connect to from your mobile device, select the printer and the printer's LED will blink. Press the WPS button on the printer and it will be connected to your mobile device.
- If your mobile device does not support Wi-Fi Direct, you need to enter the "Network Key" of a printer instead of pushing the WPS button.

Troubleshooting for wireless network

Problems during setup or driver installation

Printers Not Found

- Your machine may not be turned on. Turn on your computer and the machine.
- USB cable is not connected between your computer and machine. Connect the machine to your computer using the USB cable.
- The machine does not support wireless networking. Check the machine's user's guide included on the software CD supplied with your machine and prepare a wireless network machine.

Connecting Failure - SSID Not Found

- The machine is unable to find the network name (SSID) you have selected or entered. Check the network name (SSID) on your access point and try connecting again.
- Your access p

  oint is not turned on. Turn on your access point.

Connecting Failure - Invalid Security

- Security is not configured correctly. Check the configured security on your access point and machine.

Connecting Failure - General Connection Error

- Your computer is not receiving a signal from your machine. Check the USB cable and your machine's power.

Connecting Failure - Connected Wired Network

- Your machine is connected with a wired network cable. Remove the wired network cable from your machine.

Connecting Failure - Assigning the IP address

- Cycle the power for the access point (or wireless router) and machine.

PC Connection Error

- The configured network address is unable to connect between your computer and machine.
  - For a DHCP network environment

    The machine receives the IP address automatically (DHCP) when computer is configured to DHCP.

If the printing job is not working in DHCP mode, the problem may be caused by the automatically changed IP address. Compare the IP address between the product's IP address and the printer port's IP address.

How to compare:

1 Print the network information report of your printer, and then check the IP address (see "Printing a network configuration report" on page 126).

2 Check the printer port's IP address from your computer.

a Click the Windows **Start** menu.

- For Windows 8, from the **Charms**, select **Search** > **Settings**.

b For Windows XP/Server 2003, select **Printer and Faxes**.

- For Windows Server 2008/Vista, select **Control Panel** > **Hardware and Sound** > **Printers**.
- For Windows Server 2008 R2, select **Control Panel** > **Hardware** > **Devices and Printers**.
- For Windows 7/ Windows 8, select **Control Panel** > **Devices and Printers**.

c Right-click your machine.

d For Windows XP/2003/2008/Vista, press **Properties**.

For Windows 7/ Windows 8 or Windows Server 2008 R2, from context menus, select the **Printer properties**.

If **Printer properties** item has ► mark, you can select other printer drivers connected with selected printer.

e Click **Port** tab.

f Click **Configure Port..** button.

g Check if **Printer Name** or **IP Address:** is the IP address on the network configuration Sheet.

3 Change the printer port's IP address if it is different from the network information report's.

If you want to use the software installation CD to change the port IP, connect to a network printer. Then reconnect the IP address.

- For a Static network environment

  The machine uses the static address when the computer is configured to static address.

  For example,

  If the computer's network information is as shown below:

  - IP address: 169.254.133.42
  - Subnet Mask: 255.255.0.0

  Then the machine's network information should be as below:

  - IP address: 169.254.133.**43**
  - Subnet Mask: 255.255.0.0 (Use the computer's subnet mask.)
  - Gateway: 169.254.133.**1**

Other problems

If problems occur while using the machine on a network, check the following:

For information on the access point (or wireless router), refer to its own user's guide.

- Your computer, access point (or wireless router), or machine may not be turned on.
- Check the wireless reception around the machine. If the router is far from the machine or there is an obstacle, you might have difficulty receiving the signal.
- Cycle the power for the access point (or wireless router), machine, and computer. Sometimes cycling the power can recover network communication.
- Check whether firewall software (V3 or Norton) is blocking the communication.

  If the computer and the machine are connected on the same network and it cannot be found when searching, firewall software might be blocking the communication. Refer to the user's guide for the software to turn it off and try searching for the machine again.
- Check whether the machine's IP address is allocated correctly. You can check the IP address by printing the network configuration report.
- Check whether the access point (or wireless router) has a configured security (password). If it has a password, refer to the access point (or wireless router) administrator.
- Check the machine's IP address. Reinstall the machine driver and change the settings to connect to the machine on the network. Due to the characteristics of DHCP, the allocated IP address could change if the machine is not used for a long time or if the access point has been reset.

  Register the product's MAC address when you configure the DHCP server on the access point (or wireless router). Then you can always use the IP address that is set with the MAC address. You can identify the Mac address of your machine by printing a network configuration report (see "Printing a network configuration report" on page 126).
- Check the wireless environment. You might not be able to connect to the network in the infrastructure environment where you need to type in a user's information before connecting to the access point (or wireless router).

Wireless network setup

- This machine only supports IEEE 802.11 b/g/n and Wi-Fi. Other wireless communication types (e.g., Bluetooth) are not supported.
- When using the ad hoc mode, in operating systems such as Windows Vista, you might need to set the wireless connection setting every time you use the wireless machine.
- You cannot use infrastructure mode and ad hoc mode at the same time for Samsung wireless network machines.
- The machine is within the range of the wireless network.
- The machine is located away from obstacles that could block the wireless signal.

  Remove any large metal objects between the access point (or wireless router) and the machine.

  Make sure the machine and wireless access point (or wireless router) are not separated by poles, walls, or support columns containing metal or concrete.
- The machine is located away from other electronic devices that may interfere with the wireless signal.

  Many devices can interfere with the wireless signal, including a microwave oven and some Bluetooth devices.
- Whenever the configuration of your access point (or wireless router) changes, you must do the product's wireless network setup again.
- The maximum number of devices that can be connected via Wi-Fi Direct is 3.
- If Wi-Fi Direct is ON, this machine only supports IEEE 802.11 b/g.
- If the access point is set to work with the 802.11n standard only, it may not connect to your machine.

Samsung Mobile Print

What is Samsung Mobile Print?

Samsung Mobile Print is a free application that enables users to print photos, documents, and web pages directly from your smartphone or tablet. **Samsung Mobile Print** is not only compatible with your Android and iOS smart phones but also with your iPod Touch and tablet PC. It connects your mobile device to a network connected Samsung printer or to a wireless printer through a Wi-Fi access point. Installing a new driver or configuring network settings isn't necessary – just simply install the **Samsung Mobile Print** application, and it will automatically detect compatible Samsung printers. Besides printing photos, web pages, and PDFs, scanning is also supported. If you have a Samsung multifunction, scan any document into a JPG, PDF, or PNG format for quick and easy viewing on your mobile device.

Downloading Samsung Mobile Print

To download **Samsung Mobile Print**, go to the application store (Samsung Apps, Play Store, App Store) on your mobile device, and just search for "**Samsung Mobile Print**." You can also visit iTunes for Apple devices on your computer.

Android iOS

Supported Mobile OS

- Android OS 2.3 or higher
- iOS 4.0 or higher