User's Guide

C267x series

BASIC

This guide provides information concerning installation, basic operation and troubleshooting on Windows.

ADVANCED

This guide provides information about installation, advanced configuration, operation and troubleshooting on various OS environments.

Some features may not be available depending on models or countries.

1. Introduction

This chapter provides information you need to know before using the machine.

- Key benefits 3
- Features by model 6
- Useful to know 12
- About this user's guide 13
- Safety information 14
- Machine overview 20
- Control panel overview 23
- Turning on the machine 25
- Installing the driver locally 26
- Reinstalling the driver 28

Key benefits

Environmentally friendly

- To save toner and paper, this machine supports Eco feature (see "Eco printing" on page 57).
- To save paper, you can print multiple pages on one single sheet of paper (see "Using advanced print features" on page 260).
- To save paper, you can print on both sides of the paper (double-sided printing) (see "Using advanced print features" on page 260).
- To save electricity, this machine automatically conserves electricity by substantially reducing power consumption when not in use.
- We recommend using recycled paper for saving energy.

Fast high resolution printing

- You can print in a full range of colors using cyan, magenta, yellow, and black.
- You can print with a resolution of up to 9,600 x 600 dpi effective output (600 x 600 x 4 bit).
- Fast, on-demand printing.
  - For single-side printing, up to 26 ppm (A4) or up to 27 ppm (Letter).

Convenience

- Simply touch your mobile device on the NFC tag on your printer and get the print job done (see "Using the NFC feature" on page 204).
- You can print on the go from your smartphone or computer using Google Cloud Print™ enabled apps (see "Google Cloud Print™" on page 212).
- Easy Capture Manager allows you to easily edit and print whatever you captured using the Print Screen key on the keyboard (see "Easy Capture Manager" on page 296).
- Samsung Easy Printer Manager and Printing Status is a program that monitors and informs you of the machine's status and allows you to customize the machine's settings (see "Using Samsung Printer Status" on page 308 or "Using Samsung Easy Printer Manager" on page 305).
- Samsung Easy Document Creator is an application to help users scan, compile, and save documents in multiple formats, including .epub format. These documents can be shared via social networking sites or fax (see "Using Samsung Easy Document Creator" on page 304).
- AnyWeb Print helps you screen-capture, preview, scrap, and print the screen of Windows Internet Explorer more easily than when you use the ordinary program (see "Samsung AnyWeb Print" on page 298).

Key benefits

- Smart Update allows you to check for the latest software and install the latest version during the printer driver installation process. This is available only for Windows.
- If you have Internet access, you can get help, support application, machine drivers, manuals, and order information from the Samsung website, www.samsung.com > find your product > Support or Downloads.

Wide range of functionality and application support

- Supports various paper sizes (see "Print media specifications" on page 131).
- Print watermark: You can customize your documents with words, such as "**Confidential**" (see "Using advanced print features" on page 260).
- You can print in various operating systems (see "System requirements" on page 137).
- Your machine is equipped with a USB interface and/or a network interface.

Supports various wireless network setting method

- Using the WPS (Wi-Fi Protected Setup™) button
  - You can easily connect to a wireless network using the WPS button on the machine and the access point (a wireless router).
- Using the USB cable or a network cable
  - You can connect and set various wireless network settings using a USB cable or a network cable.
- Using the Wi-Fi Direct
  - You can conveniently print from your mobile device using the Wi-Fi or Wi-Fi Direct feature.

See "Introducing wireless set up methods" on page 178.

Key benefits

Support XOA applications

The machine supports XOA custom applications.

- Regarding the XOA custom applications, please contact your XOA custom application provider.

Features by model

Some features and optional goods may not be available depending on model or country.

Operating System

Operating System	C267xFW
Windows	●
Mac	●
Linux	●
Unix	●

(●: Included, Blank: Not available)

Software

You can install the printer driver and software when you insert the software CD into your CD-ROM drive.

For windows, select the printer driver and software in the **Select Software to Install** window.

Software	C267xFW
SPL printer driver	●
PCL printer driver	●
PS printer driver[a]	●
XPS printer driver[a]	●

Features by model

Software		C267xFW
Direct Printing Utility[a]		●
Samsung Easy Printer Manager	Scan to PC settings	●
	Fax to PC settings	●
	Device Settings	●
Samsung Printer Status		●
Samsung AnyWeb Print[a]		●
Samsung Easy Document Creator		●
Easy Capture Manager		●
Samsung Easy Color Manager[a]		●
SyncThru™ Web Service		●
SyncThru Admin Web Service		●
Easy Eco Driver		●
Fax	Samsung Network PC Fax	●
Scan	Twain scan driver	●
	WIA scan driver	●

a. Download the software from the Samsung website and install it: (http://www.samsung.com > find your product > Support or Downloads). Before installing, check whether your computer's OS support the software.

(●: Included, Blank: Not available)

Features by model

Variety feature

Features	C267xFW
Hi-Speed USB 2.0	●
Network Interface Ethernet 10/100/ 1000 Base TX wired LAN	●
IEEE 1284B port[a]	○
Network Interface 802.11b/g/n wireless LAN[b]	●
NFC (Near Field Communication)	●
Google Cloud Print™	●
AirPrint	
Eco printing	●
Duplex (2-sided) printing	●
Duplex (2-sided) printing (manual)[cd]	
USB memory interface	●
Memory module	○
Optional tray (Tray2)	○
Mass Storage Device	●[e]

Features by model

Features		C267xFW
Document Feeder	Duplex Automatic Document Feeder (DADF)	●
	Automatic Document Feeder (ADF)	
Handset		
Fax	Multi-send	●
	Delay send	●
	Priority send	
	Duplex send	●
	Secure receive	●
	Duplex print	●
	Send/ Receive forward - fax	●
	Send/ Receive forward - email	●
	Send/ Receive forward - server	●

Features by model

Features		C267xFW
Scan	Scanning to email	●
	Scanning to SMB server	●
	Scanning to FTP server	●
	Duplex scan	●
	Scan to PC	●
Copy	ID card copying	●
	Reduced or enlarged copying	●
	Collation	●
	Poster	
	Clone	
	Auto Fit	●
	Book	●
	2-up/4-up	●
	Adjust background	●
	Margin shift	
	Edge erase	●
	Gray enhance	
	Duplex copy	●

Features by model

a. If you use the parallel port, you cannot use the USB cable.
b. Depending on your country, wireless LAN card may not be available. For some countries, only 802.11 b/g can be applied. Contact your local Samsung dealer or the retailer where you bought your machine.
c. Available for Windows OS only.
d. Only tray1 is supported.
e. The machine is equipped with 4GB of SD (secure digital) card.

(●: Included, ○: Optional, Blank: Not available)

Useful to know

The machine does not print.

- Open the print queue list and remove the document from the list (see "Canceling a print job" on page 54).
- Remove the driver and install it again (see "Installing the driver locally" on page 26).
- Select your machine as your default machine in your Windows (see "Setting your machine as a default machine" on page 259).

Where can I purchase accessories or supplies?

- Inquire at a Samsung distributor or your retailer.
- Visit www.samsung.com/supplies. Select your country/region to view product service information.

The status LED flashes or remains constantly on.

- Turn the product off and on again.
- Check the meanings of LED indications in this manual and troubleshoot accordingly (see "Understanding the status LED" on page 120).

A paper jam has occurred.

- Open and close the door (see "Front view" on page 21).
- Check the instructions on removing jammed paper in this manual and troubleshoot accordingly (see "Clearing paper jams" on page 111).

Printouts are blurry.

- The toner level might be low or uneven. Shake the toner cartridge (see "Redistributing toner" on page 84).
- Try a different print resolution setting (see "Opening printing preferences" on page 55).
- Replace the toner cartridge (see "Replacing the toner cartridge" on page 86).

Where can I download the machine's driver?

- You can get help, support application, machine drivers, manuals, and order information from the Samsung website, www.samsung.com > find your product > Support or Downloads.

About this user’s guide

This user's guide provides information for your basic understanding of the machine as well as detailed steps to explain machine usage.

- Read the safety information before using the machine.
- If you have a problem using the machine, refer to the troubleshooting chapter.
- Terms used in this user’s guide are explained in the glossary chapter.
- All illustrations in this user’s guide may differ from your machine depending on its options or model you purchased.
- The screenshots in this user’s guide may differ from your machine depending on the machine’s firmware/driver version.
- The procedures in this user’s guide are mainly based on Windows 7.

Conventions

Some terms in this guide are used interchangeably, as below:

- Document is synonymous with original.
- Paper is synonymous with media, or print media.
- Machine refers to printer or MFP.

General icons

Icon	Text	Description
	Caution	Gives users information to protect the machine from possible mechanical damage or malfunction.
	Warning	Used to alert users to the possibility of personal injury.
	Note	Provides additional information or detailed specification of the machine function and feature.

Safety information

These warnings and precautions are included to prevent injury to you and others, and to prevent any potential damage to your machine. Be sure to read and understand all of these instructions before using the machine. After reading this section, keep it in a safe place for future reference.

Important safety symbols

Explanation of all icons and signs used in this chapter

	Warning	Hazards or unsafe practices that may result in severe personal injury or death.
	Caution	Hazards or unsafe practices that may result in minor personal injury or property damage.
	Do not attempt.	

Operating environment

Warning

	Do not use if the power cord is damaged or if the electrical outlet is not grounded. This could result in electric shock or fire.
	Do not place anything on top of the machine (water, small metal or heavy objects, candles, lit cigarettes, etc.). This could result in electric shock or fire.
	• If the machine gets overheated, it releases smoke, makes strange noises, or generates an odd odor, immediately turn off the power switch and unplug the machine. • The user should be able to access the power outlet in case of emergencies that might require the user to pull the plug out. This could result in electric shock or fire.
	Do not bend, or place heavy objects on the power cord. Stepping on or allowing the power cord to be crushed by a heavy object could result in electric shock or fire.
	Do not remove the plug by pulling on the cord; do not handle the plug with wet hands. This could result in electric shock or fire.

Safety information

Caution

	During an electrical storm or for a period of non-operation, remove the power plug from the electrical outlet. This could result in electric shock or fire.
	Be careful, the paper output area is hot. Burns could occur.
	If the machine has been dropped, or if the cabinet appears damaged, unplug the machine from all interface connections and request assistance from qualified service personnel. Otherwise, this could result in electric shock or fire.
	If the machine does not operate properly after these instructions have been followed, unplug the machine from all interface connections and request assistance from qualified service personnel. Otherwise, this could result in electric shock or fire.
	If the plug does not easily enter the electrical outlet, do not attempt to force it in. Call an electrician to change the electrical outlet, or this could result in electric shock.
	Do not allow pets to chew on the AC power, telephone or PC interface cords. This could result in electric shock or fire and/or injury to your pet.

Operating method

Caution

	Do not forcefully pull the paper out during printing. It can cause damage to the machine.
	Be careful not to put your hand between the machine and paper tray. You may get injured.
	Be careful when replacing paper or removing jammed paper. New paper has sharp edges and can cause painful cuts.
	When printing large quantities, the bottom part of the paper output area may get hot. Do not allow children to touch. Burns can occur.
	When removing jammed paper, do not use tweezers or sharp metal objects. It can damage the machine.
	Do not allow too many papers to stack up in the paper output tray. It can damage the machine.

Safety information

	Do not block or push objects into the ventilation opening. This could result in elevated component temperatures which can cause damage or fire.
	Use of controls or adjustments or performance of procedures other than those specified herein may result in hazardous radiation exposure.
	This machine's power reception device is the power cord. To switch off the power supply, remove the power cord from the electrical outlet.

Installation / Moving

Warning

	Do not place the machine in an area with dust, humidity, or water leaks. This could result in electric shock or fire.
	Place the machine in the environment where it meets the operating temperature and humidity specification. Otherwise, quality problems can occur and cause damage to the machine (see "General specifications" on page 129).

Caution

	Before moving the machine, turn the power off and disconnect all cords. The information below are only suggestions based on the units weight. If you have a medical condition that prevents you from lifting, do not lift the machine. Ask for help, and always use the appropriate amount of people to lift the device safely. Then lift the machine: • If the machine weighs under 20 kg (44.09 lbs), lift with 1 person. • If the machine weighs 20 kg (44.09 lbs) - 40kg (88.18 lbs), lift with 2 people. • If the machine weighs more than 40 kg (88.18 lbs), lift with 4 or more people. The machine could fall, causing injury or machine damage.
	Choose a flat surface with enough space for ventilation to place the machine. Also consider the space required to open the cover and trays. The place should be well-ventilated and be far from direct light, heat, and humidity.
	When using the machine for a long period of time or printing a large number of pages in a non-ventilated space, it could pollute the air and be harmful to your health. Place the machine in a well-ventilated space or open a window to circulate the air periodically.

	Do not place the machine on an unstable surface. The machine could fall, causing injury or machine damage.
	Use only No.26 AWG[a] or larger, telephone line cord, if necessary. Otherwise, it can cause damage to the machine.
	Make sure you plug the power cord into a grounded electrical outlet. Otherwise, this could result in electric shock or fire.
	Use the power cord supplied with your machine for safe operation. If you are using a cord which is longer than 2 meters (6 feet) with a 110V machine, then the gauge should be 16 AWG or larger. Otherwise, it can cause damage to the machine, and could result in electric shock or fire.
	Do not put a cover over the machine or place it in an airtight location, such as a closet. If the machine is not well-ventilated, this could result in fire.
	Do not overload wall outlets and extension cords. This can diminish performance, and could result in electric shock or fire.
	The machine should be connected to the power level which is specified on the label. If you are unsure and want to check the power level you are using, contact the electrical utility company.

a. AWG: American Wire Gauge

Maintenance / Checking

Caution

	Unplug this product from the wall outlet before cleaning the inside of the machine. Do not clean the machine with benzene, paint thinner or alcohol; do not spray water directly into the machine. This could result in electric shock or fire.
	When you are working inside the machine replacing supplies or cleaning the inside, do not operate the machine. You could get injured.
	Keep cleaning supplies away from children. Children could get hurt.
	Do not disassemble, repair or rebuild the machine by yourself. It can damage the machine. Call a certified technician when the machine needs repairing.

Safety information

	To clean and operate the machine, strictly follow the user's guide provided with the machine. Otherwise, you could damage the machine.
	Keep the power cable and the contact surface of the plug clean from dust or water. Otherwise, this could result in electric shock or fire.
	• Do not remove any covers or guards that are fastened with screws. • Fuser units should only be repaired by a certified service technician. Repair by non-certified technicians could result in fire or electric shock. • The machine should only be repaired by a Samsung service technician.

Supply usage

Caution

	Do not disassemble the toner cartridge. Toner dust can be dangerous if inhaled or ingested.
	Do not burn any of the supplies such as toner cartridge or fuser unit. This could cause an explosion or uncontrollable fire.
	When storing supplies such as toner cartridges, keep them away from children. Toner dust can be dangerous if inhaled or ingested.
	Using recycled supplies, such as toner, can cause damage to the machine. In case of damage due to the use of recycled supplies, a service fee will be charged.
	For supplies that contain toner dust (toner cartridge, waste toner bottle, imaging unit, etc.) follow the instructions below. • When disposing of the supplies, follow the instructions for disposal. Refer to the reseller for disposal instructions. • Do not wash the supplies. • For a waste toner bottle, do not reuse it after emptying the bottle. If you do not follow the instructions above, it may cause machine malfunction and environmental pollution. The warranty does not cover damages caused by a user's carelessness.
	When toner gets on your clothing, do not use hot water to wash it. Hot water sets toner into fabric. Use cold water.

Safety information

ⓘ	When changing the toner cartridge or removing jammed paper, be careful not to let toner dust touch your body or clothes. Toner dust can be dangerous if inhaled or ingested.

Machine overview

Components

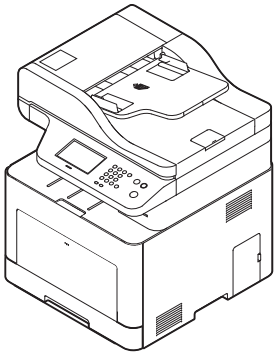		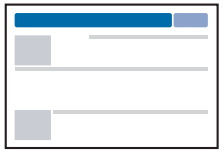
Machine	Power cord	Quick installation guide
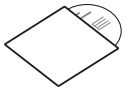	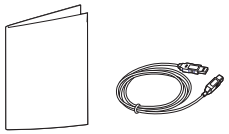	
Software CD[a]	Misc. accessories[b]	

a. The software CD contains the print drivers, user's guide, and software applications.
b. Miscellaneous accessories included with your machine may vary by country of purchase and specific model.

Machine overview

Front view

- This illustration may differ from your machine depending on your model. There are various types of machine.
- Some features and optional goods may not be available depending on model or country (see "Features by model" on page 6).

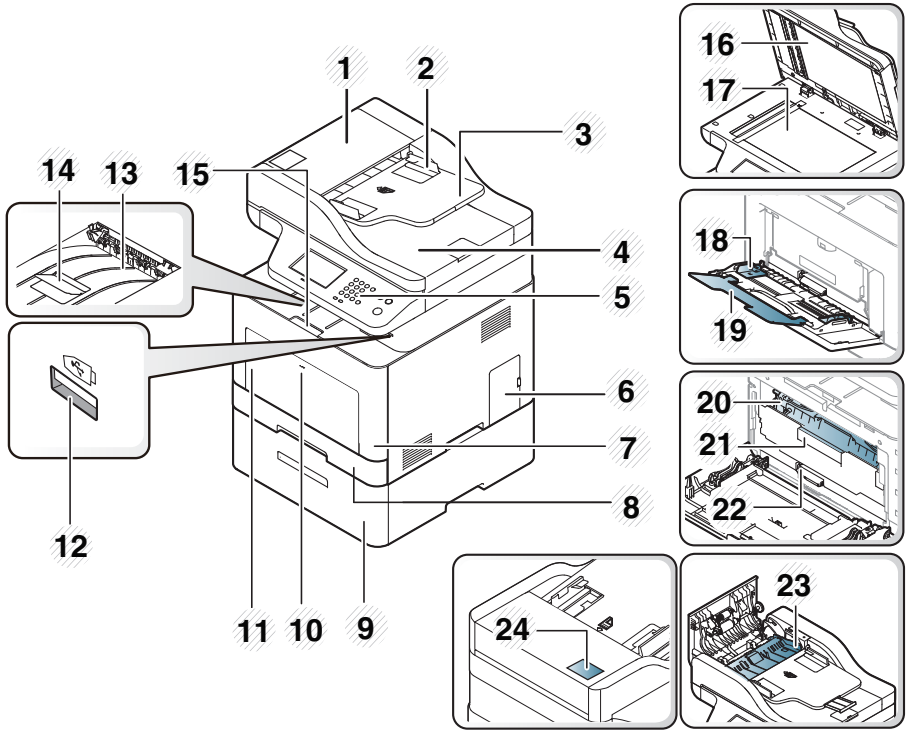

1	Duplex Automatic Document Feeder (DADF) cover	13	Output tray
2	Duplex Automatic Document Feeder (DADF) width guide	14	Document feeder output support
3	Duplex Automatic Document Feeder (DADF) input tray	15	Front cover handle
4	Duplex Automatic Document Feeder (DADF) output tray	16	Scanner lid
5	Control panel	17	Scanner glass
6	Control board cover	18	Paper width guides on a multi-purpose tray
7	Front cover	19	Multi-purpose support tray
8	Tray 1	20	Toner cartridge
9	Optional tray[a]	21	Toner cartridge handle
10	Push-release of Multi-purpose tray	22	Intermediate Transfer Belt (ITB)
11	Multi-purpose tray	23	Duplex jam cover
12	USB memory port	24	NFC tag (Near Field Communication)

a. This is an optional feature.

Machine overview

Rear view

- This illustration may differ from your machine depending on your model. There are various types of machine.
- Some features and optional goods may not be available depending on model or country (see "Features by model" on page 6).

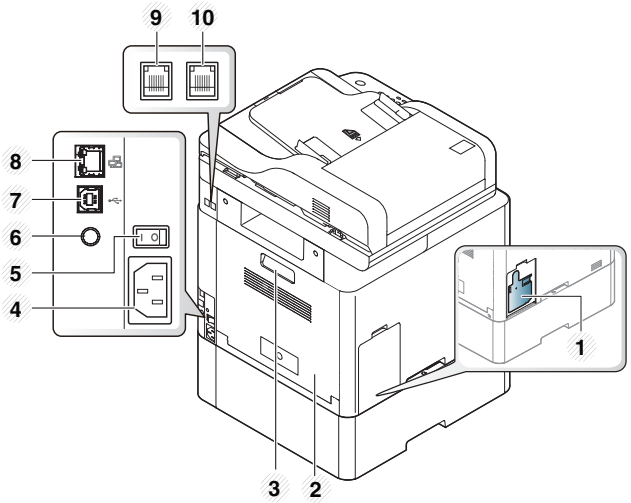

1	Waster toner container	4	Power receptacle	7	USB port	10	Extension telephone socket (**EXT.**)
2	Rear cover	5	Power-switch	8	Network port		
3	Rear cover handle	6	5V output port for IEEE 1284B Port[a]	9	Telephone line socket (**LINE**)		

a. The optional IEEE 1284B parallel connector can be used by plugging in both the USB port and the 5V output port.

Control panel overview

- This control panel may differ from your machine depending on its model. There are various types of control panels.
- Some features and optional goods may not be available depending on model or country (see "Features by model" on page 6).
- Some buttons may not work depending on the mode (copy, fax, or scan).

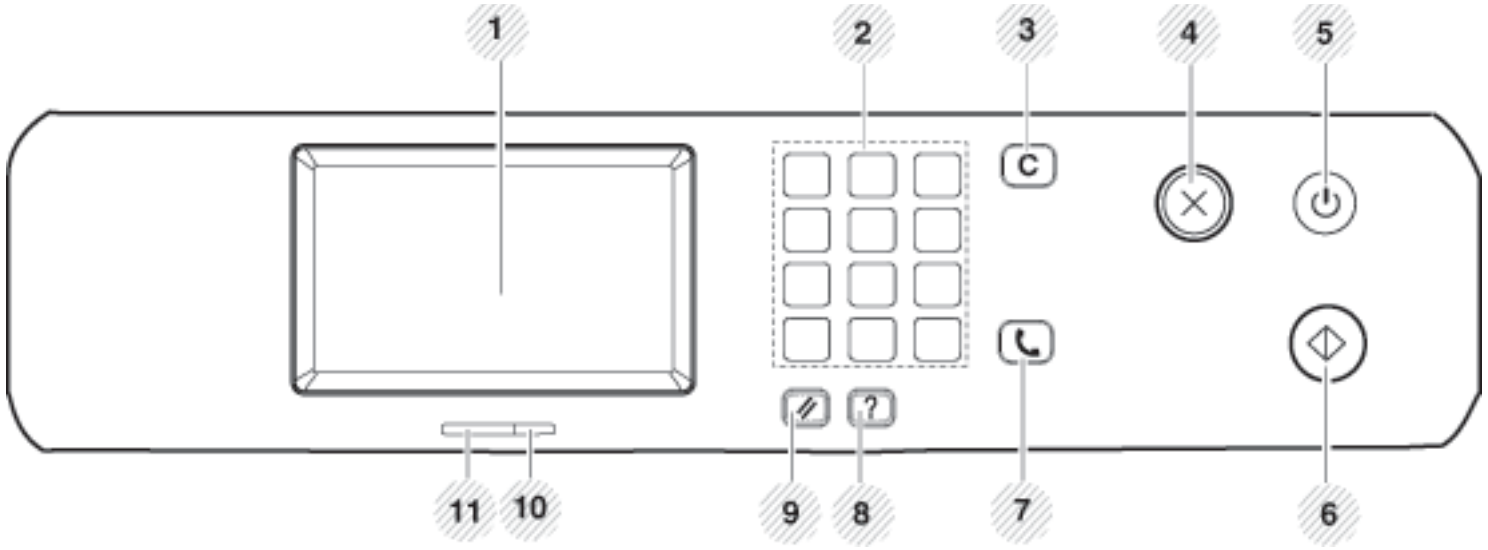

1	**Display screen**		Shows the current status and displays prompts during an operation.
2	**Numeric keypad**		Dials a number or enters alphanumeric characters (see "Keypad letters and numbers" on page 253).
3	**Clear**	C	Deletes characters in the edit area.
4	**Stop**		Stops an operations at any time.

Control panel overview

5	**Power/Wake Up**		Turns the power on or off, or wakes up the machine from the power save mode. If you need to turn the machine off, press this button for more than three seconds.
6	**Start**		Starts a job in black or color mode.
7	**On Hook Dial**		When you press this button, you can hear a dial tone. Then enter a fax number. It is similar to making a call using speaker phone (see "Receiving manually in Tel mode" on page 288).
8	**Help**		Gives detailed information about this machine's menus or status.
9	**Reset**		Resets the current machine's setup.
10	**Wireless LED**		Shows the current status of the wireless network connection (see "Understanding the status LED" on page 120).
11	**Status LED**		Indicates the status of your machine (see "Understanding the status LED" on page 120).

Turning on the machine

Illustrations on this user's guide may differ from your machine depending on its options or models. Check your machine type (see "Front view" on page 21).

1 Connect the machine to the electricity supply first.

2 Turn the power switch on.

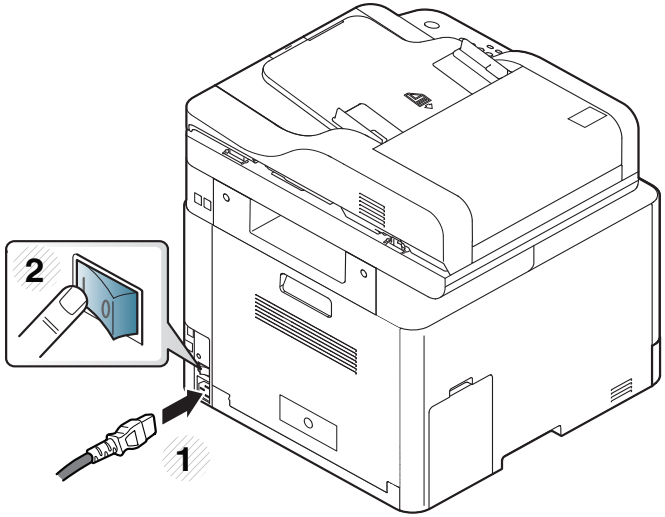

Installing the driver locally

A locally connected machine is a machine directly attached to your computer using the cable. If your machine is attached to a network, skip the following steps below and go on to installing a network connected machine's driver (see "Installing driver over the network" on page 166).

- If you are a Mac, Linux or UNIX operating systems user, refer to the "Installation for Mac" on page 157 or "Installation for Linux" on page 159 or "Installing the UNIX printer driver package" on page 171.
- The installation window in this User's Guide may differ depending on the machine and interface in use.
- Only use a USB cable no longer than 3 meters (118 inches).

Windows

1 Make sure that the machine is connected to your computer and powered on.

2 Insert the supplied software CD into your CD-ROM drive.

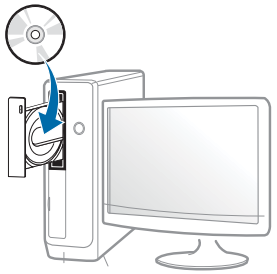

If the installation window does not appear, click **Start** > **All programs** > **Accessories** > **Run**.

X:**Setup.exe** replacing "X" with the letter, which represents your CD-ROM drive and click **OK**.

- For Windows 8,

  If the installation window does not appear, from **Charms**, select **Search** > **Apps** and search for **Run**. Type in X:\Setup.exe, replacing "X" with the letter that represents your CD-ROM drive and click **OK**.

  If "**Tap to choose what happens with this disc**." pop-up window appears, click the window and select **Run Setup.exe**.

3 Review and accept the installation agreements in the installation window. Then, click **Next**.

Installing the driver locally

4 Select **USB connection** on the **Printer Connection Type** screen. Then, click **Next**.

5 Follow the instructions in the installation window.

You can select the software applications in the **Select Software to Install** window.

From the Windows 8 Start Screen

- The V4 driver is automatically downloaded from the Windows Update if your computer is connected to the Internet. If not, you can manually download the V4 driver from Samsung website, www.samsung.com > find your product > Support or downloads.
- You can download Samsung Printer Experience app from the **Windows Store**. You need have a Microsoft account to use the Windows **Store**.
  1 From **Charms**, select **Search**.
  2 Click **Store**.
  3 Search and click **Samsung Printer Experience**.
  4 Click **Install**.

- If you install the driver using the supplied software CD, V4 driver is not installed. If you want to use the V4 driver in the **Desktop** screen, you can download from the Samsung website, www.samsung.com >find your product > Support or downloads.
- If you want to install Samsung's printer management tools, you need to install them using the supplied software CD.

1 Make sure that your computer is connected to the Internet and powered on.

2 Make sure that the machine is powered on.

3 Connect the computer and the machine with a USB cable.

The driver is automatically installed from the **Windows Update**.

Reinstalling the driver

If the printer driver does not work properly, follow the steps below to reinstall the driver.

Windows

1. From the **Start** menu, select **Programs** or **All Programs** > **Samsung Printers** > **Uninstall Samsung Printer Software**.
2. Follow the instructions in the installation window.
3. Insert the software CD into your CD-ROM drive and install the driver again (see "Installing the driver locally" on page 26).

From the Windows 8 Start Screen

1. Make sure that the machine is connected to your computer and powered on.
2. Click on the **Uninstall Samsung Printer Software** tile in the **Start** screen.
3. Follow the instructions in the window.

- If you cannot find a Samsung Printer Software tile, unintstall from the desktop screen mode.
- If you want to uninstall Samsung's printer management tools, from the **Start** screen, right-click the app > **Uninstall** > right-click the program you want to delete > **Uninstall** and follow the instruction in the window.

2. Menu Overview and Basic Setup

This chapter provides information about the overall menu structure and the basic setup options.

- Menu overview 30
- Machine's basic settings 37
- Media and tray 39
- Basic printing 53
- Basic copying 60
- Basic scanning 65
- Basic faxing 66
- Using USB memory device 70

Menu overview

The control panel provides access to various menus to set up the machine or use the machine's functions.

- An checked (√) appears next to the currently selected menu.
- Some menus may not appear on the display depending on options or models. If so, it is not applicable to your machine.
- Some menu names may differ from your machine depending on its options or the models.
- The menus are described in the Advanced Guide (see "Useful Setting Menus" on page 215).

You can set menus easily using the touch screen.

- The **Main** screen is shown on the touch screen on the control panel.
- Some menus are grayed out depending on your options or models.
- Some menu names may differ from your machine depending on its options or the models.

Menu overview

Introducing the Home Screen

- **(Copy):** When you press **Copy** from the display screen, the Copy screen appears which has several tabs and lots of copying options.
- **(Scan):** When you press **Scan** from the display screen, the Scan screen appears which has several tabs and lots of Scanning options.
- **(Fax):** When you press **Fax** from the display screen, the Fax screen appears which has several tabs and lots of Faxing options.
- **(Setup):** You can browse current machine settings or change machine values.
- **(Job Status):** Job status shows the jobs currently running, completed job or in queue.
- **(Eco):** You can view the eco settings.
- **(Direct USB):** Enters the USB menu when USB memory is inserted into the USB memory port on your machine.
- **(Document Box):** You can store the printing data, print the secure page or shared folder.
- **:** Shows the toner status.
- **:** Selects the LCD brightness and language.
- < ∧ ∨ > **:** Scroll through available options.

Menu overview

Copy (see "Copy" on page 218)				Fax (see "Fax" on page 224)		
Basic Copy	Auto	Border Erase	Color Mode	Memory Send	Delayed Send	Group Dial Send
Darkness	Tray1	Stamp	Original Size	Darkness	Darkness	Darkness
Original Type	Tray2[a]	Item	Original Type	Resolution	Resolution	Resolution
Text	MP Tray	Opacity	N-up Copy	Duplex	Duplex	Duplex
Text/Photo	Manual Feeder	Position	Duplex	Original Type	Original Type	Original Type
Photo	Layout	Watermark	Darkness	Original Size	Original Size	Original Size
Magazine	Off	ID Copy	Color Mode	Color Mode	SpeedDial Send	Color Mode
Color Mode	Collation	Darkness	Original Size	On Hook Dial	Darkness	Redial
Auto	2-up	Color Mode	Original Type	Darkness	Resolution	Darkness
Color	4-up	Color	N-up	Resolution	Duplex	Resolution
Mono	ID Copy	Mono	Book Copy	Duplex	Original Type	Duplex
Custom Copy	Book Copy	Auto Fit Copy	Darkness	Original Type	Original Size	Original Type
Duplex	Adjust Background	Darkness	Color Mode	Original Size	Color Mode	Original Size
Reduce/Enlarge	Edge Erase	Original Type	Original Size	Color Mode		Color Mode
Darkness	Off	Color Mode	Original Type			
Color Mode	SmallOriginal	Collate Copy	Book Copy			
Original Size	Hole Punch	Duplex				
Original Type	Book Center[b]	Darkness				
Tray						

a. This is an optional feature.
b. This option appears only when the **Layout** option is **Book Copy**.

Menu overview

Scan (see "Scan" on page 229)					Eco (see "Eco" on page 247)
Local PC	Send Email	Duplex	Original Type	Shared Folder	Eco-On
Destination	To	Darkness	Original Size	Original Size	On
Resolution	Original Type	File Name	Resolution	Resolution	Off
Color Mode	Original Size	FTP	Color Mode	Color Mode	Settings
File Format	Resolution	Destination	File Format	File Name	Default Mode
PDF Encryption[a]	Color Mode	Original Type	PDF Encryption[a]	File Format	On
Duplex	File Format	Original Size	Duplex	PDF Encryption[a]	Off
Original Size	PDF Encryption[a]	Resolution	Darkness	Duplex	On-Forced[b]
Original Type	Duplex	Color Mode	File Name	Darkness	Feature Configuration
Darkness	Darkness	File Format	USB	File Policy	Default
Network PC	File Name	PDF Encryption[a]	Original Type	WSD	Custom
Destination	SMB	Duplex	Original Size		
Resolution	Destination	Darkness	Resolution		
Color Mode	Original Type	File Name	Color Mode		
File Format	Original Size	Custom Email	File Name		
PDF Encryption[a]	Resolution	To	File Format		
Duplex	Color Mode	Subject	PDF Encryption[a]		
Original Size	File Format	From	Duplex		
Original Type	PDF Encryption[a]	CC	Darkness		
Darkness		BCC	File Policy		

a. This option appears only when the **File Format** option is PDF type.

b. If you set the eco mode on with a passwcode from the SyncThru™ Web Service (**Settings** tab > **Machine Settings** > **System** > **Eco Settings**) or Samsung Easy Printer Manager (**Device Settings** > **Eco**), the **On force** message appears. You have to enter the passcode to change the eco mode status.

Menu overview

Direct USB (see "Direct USB" on page 248)	Setup (see "System setup" on page 233)				
Print From	Machine Setup	Email	Account	WINS	Connect via PIN
Auto Fit	Default Setting	Print	Fax Setup	SNMP V1/V2	WLAN Settings
Copies	Copy Default	Reset	Send Forward	SNTP	WLAN Defaults
Duplex	Scan Default	Reports	Receive Forward	UPnP(SSDP)	WLAN Signal
Select Tray	Fax Default	Configuration	Toll Save	MDNS	Clear Settings
Color Mode	Paper Setup	Supplies Information	Secure Receive	SetIP	Print Setup
Scan to USB	Tray1	Demo Page	Prefix Dial	SLP	Orientation
Original Type	Tray2[b]	Help List	Stmp Rcvd Name	Wireless	Copies
Original Size	MP Tray	Address Book	ECM Mode	Wi-Fi ON/OFF	Resolution
Resolution	Manual Feeder	Fax Send Confirmation	Modem Speed	Wi-Fi Direct	Clear Text
Color Mode	Margin	Fax Sent	Image TCR	Wi-Fi Direct On/Off	Edge Enhance
File Name	Tray Behaviour	Email Sent	Setup Wizard	Device Name	Trapping
File Format	Auto Tray Switch	Fax Received	Network Setup	IP Address	Screen
PDF Encryption[a]	Auto Continue	Fax Schedule Jobs	Ethernet Speed	Group Owner	Emulation
Duplex	Paper Substitution	Network Configuration	TCP/IP (IPv4)	Network Key	Select Tray
Darkness	Tray Protection	PCL Font List	TCP/IP (IPv6)	Status	
File Policy	Address Book	PS Font List	802.1x	WPS Settings	
File Manage	PhoneBook	Usage Counter	Ethernet Activate	Connect via PBC	
Show Space			Http Activate		

Menu overview

a. This option appears only when the **File Format** option is PDF type.
b. This is an optional feature.

Setup (see "System setup" on page 233)			Document Box (see "System setup" on page 233)
Initial Setup	Toner Status Alert	Admin Setup	System Boxes
Machine ID	Skip Blank Pages	User Access Control	Stored Print
Select Country	Job Timeout	Authentication	Secured Print
Language	Altitude Adjustment	Stamp	Shared Folder
Date&Time	Auto CR	Item	Duplex
Clock Mode	Firmware Version	Opacity	Select Tray
Default Mode	PDF Type	Position	Copies
Sound/Volume	ImageOverwrite	Change Admin. Password	Color Mode
Power Save	Default Paper Size	Firmware Upgrade	
Wakeup Event	CLR Empty Msg[a]	Troubleshooting	
System Timeout	Image Management	Language	
Import Setting	Vapor Mode		
Export Setting	Paper Stacking		
	Humidity		

a. This option only appears when small amount of toner is left in the cartridge.

Machine’s basic settings

You can set the machine’s settings by using the **Device Settings** in Samsung Easy Printer Manager program.

- For Windows and Mac users, see "Device Settings" on page 307.
  - For Windows and Mac users, you set from **Samsung Easy Printer Manager** > **(Switch to advanced mode)** > **Device Settings**, see "Device Settings" on page 307.

After installation is complete, you may want to set the machine's default settings.

To change the machine’s default settings, follow these steps:

It may be necessary to press **OK** to navigate to lower-level menus for some models.

1 Select (**Menu**) > **System Setup** > **Machine Setup** on the control panel.

Or select **Setup**> **Machine Setup** >**Next** > **Initial Setup** on the touch screen.

2 Select the option you want, then press **OK**.

- **Language:** change the language that is displayed on the control panel.
- **Date & Time:** When you set the time and date, they are used in delay fax and delay print. They are printed on reports. If, however, they are not correct, you need to change it for the correct time being.

Enter the correct time and date using arrows or numeric keypad (see "Keypad letters and numbers" on page 253).

- Month = 01 to 12
- Day = 01 to 31
- Year = requires four digits
- Hour = 01 to 12
- Minute = 00 to 59

- **Clock Mode:** You can set your machine to display the current time using either a 12-hour or 24-hour format.
- **Power Save:** When you are not using the machine for a while, use this feature to save power.

Machine’s basic settings

When you press the (**Power/Wake Up**) button, start printing, or a fax is received, the product will wake up from the power saving mode.

- **Altitude Adjustment:** Print quality is affected by atmospheric pressure, which atmospheric pressure is determined by the height of the machine above sea level. Before you set the altitude value, determine the altitude where you are (see "Altitude adjustment" on page 250).

3 Select the option you want, then press **OK**.

4 Press **OK** to save the selection.

5 Press (**Stop/Clear**) button or home( ) icon to return to ready mode.

Refer to below links to set other settings useful for using the machine.

- See "Entering various characters" on page 253.
- See "Keypad letters and numbers" on page 253.
- See "Setting the paper size and type" on page 48.
- See "Setting up the fax address book" on page 254.

Media and tray

This chapter provides information on how to load print media into your machine.

- Using print media that does not meet these specifications may cause problems or require repairs. Such repairs are not covered by Samsung's warranty or service agreements.
- Make sure not to use the inkjet photo paper with this machine. It could cause damage to the machine.
- Using inflammable print media can cause a fire.
- Use designated print media (see "Print media specifications" on page 131).

The use of inflammable media or foreign materials left in the printer may lead to overheating of the unit and, in rare cases may cause a fire.

Tray overview

To change the size, you need to adjust the paper guides.

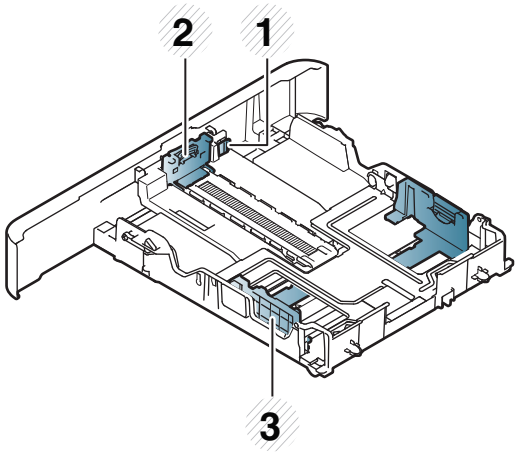

1 Tray extend lever

2 Paper length guide

3 Paper width guide

4 Paper width guides on a manual feeder

For Legal-sized paper

Push button as shown and pull out the tray.

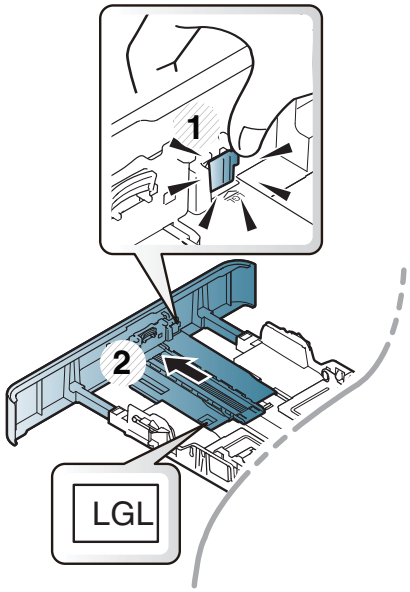

Illustrations on this user's guide may differ from your machine depending on its options or models. Check your machine type (see "Tray overview" on page 39).

If you do not adjust the guide, it may cause paper registration, image skew, or jamming of the paper.

Loading paper in the tray

Illustrations on this user's guide may differ from your machine depending on its options or models. Check your machine type (see "Front view" on page 21).

Tray 1 / optional tray

1 Pull out the paper tray.

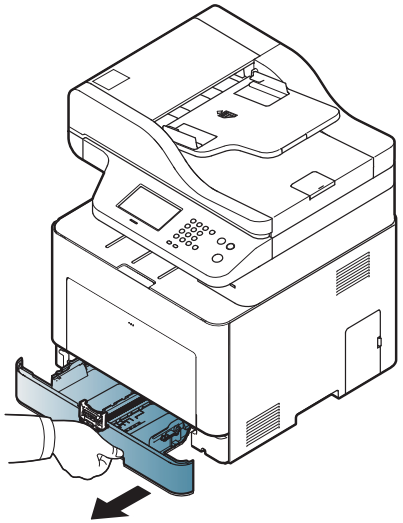

2 Squeeze and the paper width guide and paper length lever to locate them in the correct paper size slot marked at the bottom of the tray to adjust to the size (see "Tray overview" on page 39).

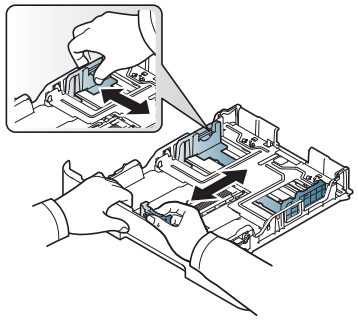

3 Flex or fan the edge of the paper stack to separate the pages before loading papers.

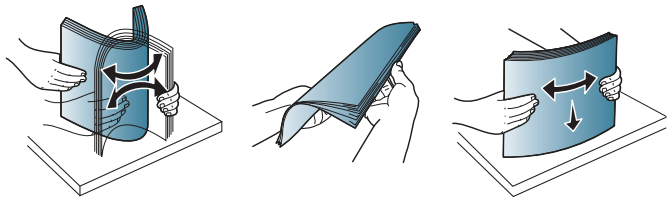

4 After inserting paper into the tray, squeeze the paper width guides and paper length guide.

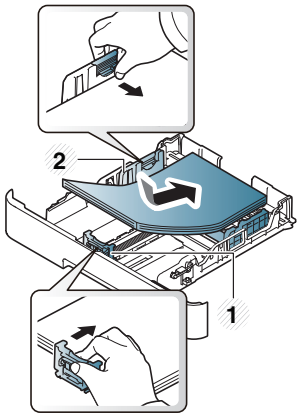

1 Paper length guide

2 Paper width guide

Media and tray

- Do not push the paper width guide too far causing the media to warp.
- If you do not adjust the paper width guide, it may cause paper jams.

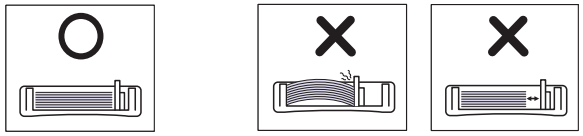

- Do not use a paper with a leading-edge curl, it may cause a paper jam or the paper can be wrinkled.

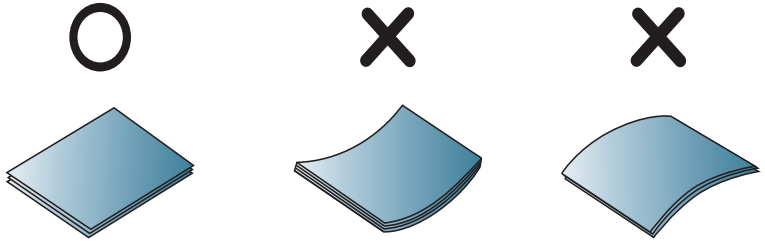

5 Insert the tray back into the machine.

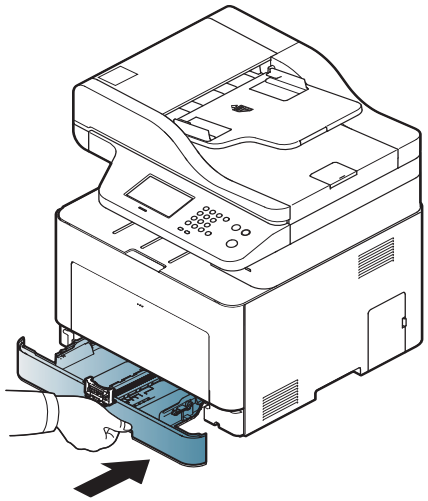

6 When you print a document, set the paper type and size for tray (see "Setting the paper size and type" on page 48).

Multi-purpose (or Manual feeder) tray

The multi-purpose (or manual feeder) tray can hold special sizes and types of print material, such as postcards, note cards, and envelopes (see "Print media specifications" on page 131).

Media and tray

Tips on using the multi-purpose (or manual feeder) tray

- Load only one type, size and weight of print media at a time in the multi-purpose (or manual feeder) tray.
- To prevent paper jams, do not add paper while printing when there is still paper in the multi-purpose (or manual feeder) tray. This also applies to other types of print media.
- Always load the specified print media only to avoid paper jams and print quality problems (see "Print media specifications" on page 131).
- Flatten any curl on postcards, envelopes, and labels before loading them into the multi-purpose (or manual feeder) tray.

1 Pull out the paper tray for manual feeding.

OR

Press the push-release of multi-purpose tray and it down to open.

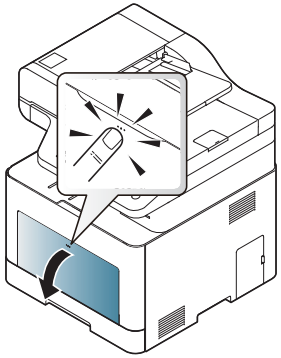

2 Load the paper.

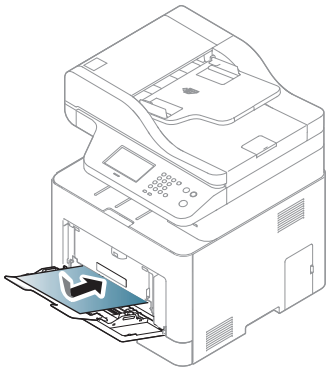

3 Squeeze the multi-purpose (or manual feeder) tray paper width guides and adjust them to the width of the paper. Do not force them too much, or the paper will bent resulting in a paper jam or skew.

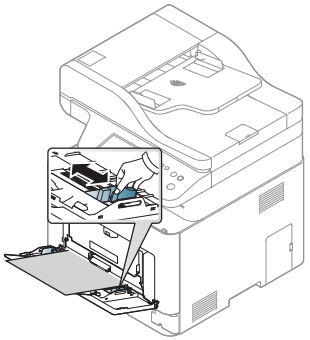

- When printing the special media, you must follow the loading guideline (See "Printing on special media" on page 44).
- When papers overlap when printing using Multi-purpose tray, open tray 1 and remove overlapping papers then try printing again.

4 When you print a document, set the paper type and size for the multi-purpose (or manual feeder) tray.

For information about setting the paper type and size on the control panel (see "Setting the paper size and type" on page 48).

Printing on special media

The paper setting in the machine and driver should match to print without a paper mismatch error.

To change the paper setting set in the machine, from the **Samsung Easy Printer Manager** select **(Switch to advanced mode)** > **Device Settings**.

Or if your machine supports a display screen or touch screen, you can set it from the control panel.

Then, set the paper type from the **Printing preferences** window > **Paper** tab > **Paper Type**(see "Opening printing preferences" on page 55).

- When using special media, we recommend you feed one sheet at a time (see "Print media specifications" on page 131).
- Illustrations on this user's guide may differ from your machine depending on its options or models. Check your machine type (see "Front view" on page 21).

To see paper weights for each sheet, refer to "Print media specifications" on page 131.

Types	Tray 1	Optional tray	Manual feeder/ Multi-purpose tray
Plain	●	●	●
Thick	●	●	●
Thicker	●		●
Thin	●	●	●
Bond	●	●	●
Color	●		●
CardStock	●	●	●
Labels	●		●
Transparency	●		●
Envelope	●		●
Preprinted	●		●
Cotton	●		●
Recycled	●	●	●
Archive	●	●	●
Letterhead	●	●	●
Punched	●	●	●

Types	Tray 1	Optional tray	Manual feeder/ Multi-purpose tray
Glossy Photo	●	●	●

(●: Supported, Blank: Not supported)

Envelope

Printing successfully on envelopes depends upon the quality of the envelopes.

To print an envelope, place it as shown in the following figure.

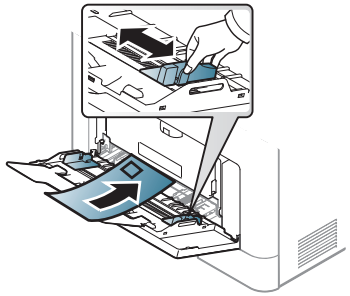

- When selecting envelopes, consider the following factors:
  - **Weight:** should not exceed 90 g/m^2 otherwise; jams may occur.
  - **Construction:** should lie flat with less than 6 mm curl and should not contain air.
  - **Condition:** should not be wrinkled, nicked, nor damaged.
  - **Temperature:** should resist the heat and pressure of the machine during operation.
- Use only well-constructed envelopes with sharp and well-creased folds.
- Do not use stamped envelopes.
- Do not use envelopes with clasps, snaps, windows, coated lining, self-adhesive seals, or other synthetic materials.
- Do not use damaged or poorly made envelopes.
- Be sure the seam at both ends of the envelope extends all the way to the corner of the envelope.

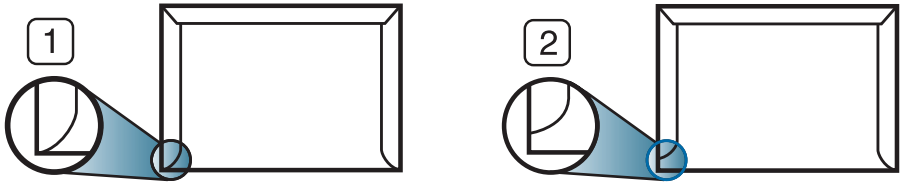

1 Acceptable
2 Unacceptable

- Envelopes with a peel-off adhesive strip or with more than one flap that folds over to seal must use adhesives compatible with the machine's fusing temperature for 0.1 second about 170°C (338 °F). The extra flaps and strips might cause wrinkling, creasing, or jams, and may even damage the fuser.
- For the best print quality, position margins no closer than 15 mm from the edges of the envelope.
- Avoid printing over the area where the envelope's seams meet.

Media and tray

Transparency

In case of color printing using transparencies, the picture quality would be lower than mono printing when the printouts are used on the overhead projector.

To avoid damaging the machine, use only transparencies designed for use in laser printers.

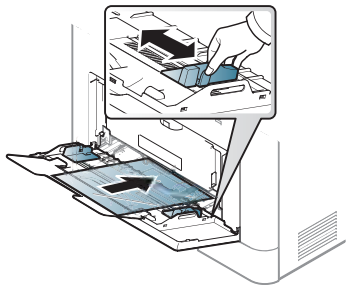

- Must withstand the machine's fusing temperature.
- Place them on a flat surface after removing them from the machine.
- Do not leave unused transparencies in the paper tray for long. Dust and dirt may accumulate on them, resulting in spotty printing.
- To avoid smudging caused by fingerprints, handle them carefully.
- To avoid fading, do not expose printed transparencies to prolonged sunlight.
- Ensure that transparencies are not wrinkled, curled, or have any torn edges.
- Do not use transparencies that separate from the backing sheet.
- To prevent transparencies from sticking to each other, do not let the printed sheets stack up as they are being printed out.
- Recommended media: Transparency for a color laser printer by Xerox, such as 3R 91331(A4), 3R 2780 (Letter).

Labels

To avoid damaging the machine, use only labels designed for use in laser printers.

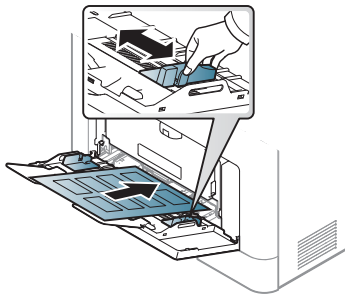

- When selecting labels, consider the following factors:
  - **Adhesives:** Should be stable at your machine's fusing temperature about 170°C (338°F).
  - **Arrangement:** Only use labels with no exposed backing between them. Labels can peel off sheets that have spaces between the labels, causing serious jams.
  - **Curl:** Must lie flat with no more than 13 mm of curl in any direction.

- **Condition:** Do not use labels with wrinkles, bubbles, or other indications of separation.

- Make sure that there is no exposed adhesive material between labels. Exposed areas can cause labels to peel off during printing, which can cause paper jams. Exposed adhesive can also cause damage to machine components.
- Do not run a sheet of labels through the machine more than once. The adhesive backing is designed for only a single pass through the machine.
- Do not use labels that are separating from the backing sheet or are wrinkled, bubbled, or otherwise damaged.

Card stock/ Custom-sized paper

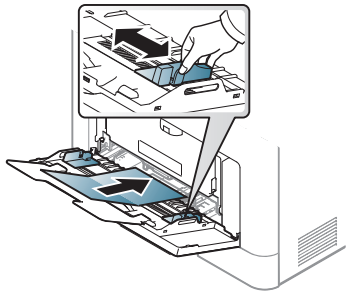

- In the software application, set the margins to at least 6.4 mm (0.25 inches) away from the edges of the material.

Preprinted paper

When loading preprinted paper, the printed side should be facing up with an uncurled edge at the front. If you experience problems with paper feeding, turn the paper around. Note that print quality is not guaranteed.

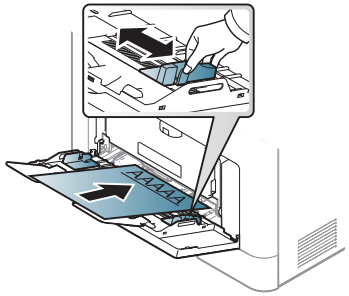

- Must be printed with heat-resistant ink that will not melt, vaporize, or release hazardous emissions when subjected to the machine's fusing temperature for 0.1 second (about 170°C (338°F)).
- Preprinted paper ink must be non-flammable and should not adversely affect machine rollers.
- Before you load preprinted paper, verify that the ink on the paper is dry. During the fusing process, wet ink can come off preprinted paper, reducing print quality.

Media and tray

Glossy Photo

- Recommended media: Glossy paper (Letter) for this machine by **HP Brochure Paper** (Product: Q6611A) only.
- Recommended media: Glossy paper (Letter) for this machine by **HP Superior Paper 160 glossy** (Product: Q6616A).

Setting the paper size and type

After loading paper in the paper tray, set the paper size and type using the control panel buttons.

The paper setting in the machine and driver should match to print without a paper mismatch error.

To change the paper setting set in the machine, from the **Samsung Easy Printer Manager** select **(Switch to advanced mode)** > **Device Settings**.

Or if your machine supports a display screen or touch screen, you can set it from the control panel.

Then, set the paper type from the **Printing preferences** window > **Paper** tab > **Paper Type** (see "Opening printing preferences" on page 55).

- You can set the paper size and type from **Device Settings** in Samsung Easy Printer Manager program.
  - For Windows and Mac users, you set from **Samsung Easy Printer Manager** > **(Switch to advanced mode)** > **Device Settings**, see "Device Settings" on page 307.
- It may be necessary to press **OK** to navigate to lower-level menus for some models.

1. Select (**Menu**) > **System Setup** > **Paper Setup** > **Paper Size** or **Paper Type** on the control panel.

   Or select **Setup**> **Machine Setup** >**Next** > **Paper Setup** > select a tray > **Paper Size** or **Paper Type** on the touch screen.
2. Select the tray and the option you want.
3. Press **OK** to save the selection.
4. Press (**Stop/Clear**) button or home( ) icon to return to ready mode.

If you want to use special-sized paper such as billing paper, select the **Paper** tab > **Size** > **Edit...** and set **Custom Paper Size Settings** in the **Printing Preferences** (see "Opening printing preferences" on page 55).

Media and tray

Using the output support

The surface of the output tray may become hot if you print a large number of pages at once. Make sure that you do not touch the surface, and do not allow children near it.

The printed pages stack on the output support, and the output support will help the printed pages to align. Unfold the output support.

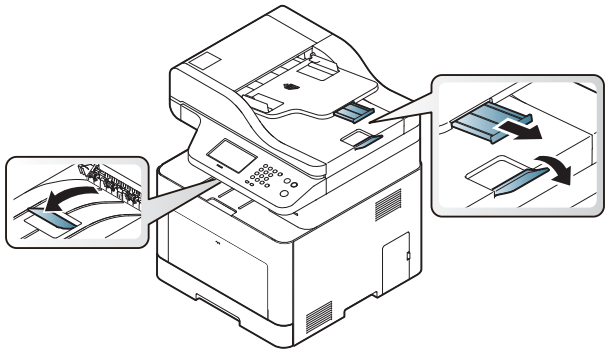

Illustrations on this user's guide may differ from your machine depending on its options or models. Check your machine type (see "Front view" on page 21).

Preparing originals

- Do not load paper smaller than 142 x 148 mm (5.6 x 5.8 inches) or larger than 216 x 356 mm (8.5 x 14 inches).
- Do not attempt to load the following s of paper, in order to prevent paper jam, low print quality and machine damage.
  - Carbon-paper or carbon-backed paper
  - Coated paper
  - Onion skin or thin paper
  - Wrinkled or creased paper
  - Curled or rolled paper
  - Torn paper
- Remove all staples and paper clips before loading.
- Make sure any glue, ink, or correction fluid on the paper is completely dry before loading.
- Do not load originals that include different sizes or weights of paper.
- Do not load booklets, pamphlets, transparencies, or documents with other unusual characteristics.

Media and tray

Loading originals

You can use the scanner glass or the document feeder to load an original for copying, scanning, and sending a fax.

Illustrations on this user's guide may differ from your machine depending on its options or models. Check your machine type (see "Front view" on page 21).

On the scanner glass

Using the scanner glass, you can copy or scan originals. You can get the best scan quality, especially for colored or gray-scaled images. Make sure that no originals are in the document feeder. If an original is detected in the document feeder, the machine gives it priority over the original on the scanner glass.

1 Lift and open the scanner lid.

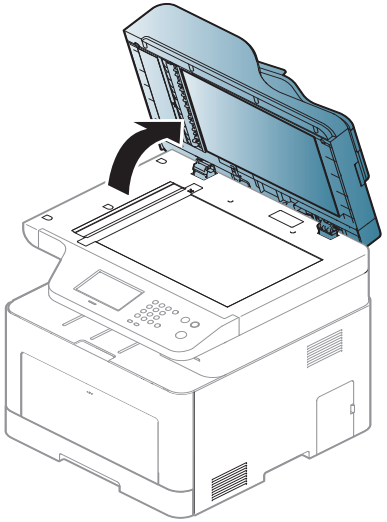

2 Place the original face down on the scanner glass. Align it with the registration guide at the top left corner of the glass.

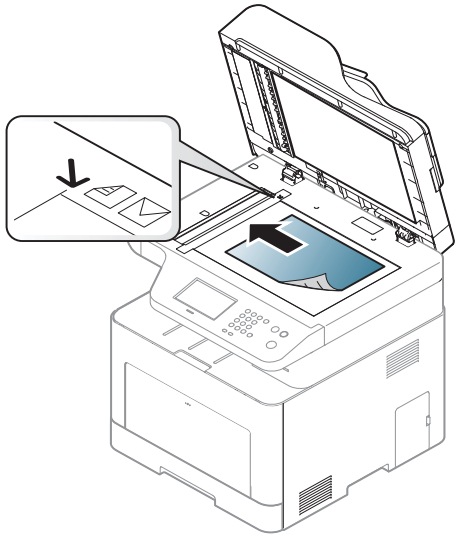

3 Close the scanner lid.

- Leaving the scanner lid open while copying may affect copy quality and toner consumption.
- Dust on the scanner glass may cause black spots on the printout. Always keep it clean (see "Cleaning the machine" on page 97).
- If you are copying a page from a book or magazine, lift the scanner lid until its hinges are caught by the stopper and then close the lid. If the book or magazine is thicker than 30 mm, start copying with the scanner lid open.

- Be careful not to break the scanner glass. You may get hurt.
- Do not put hands while closing the scanner lid. The scanner lid may fall on your hands and get hurt.
- Do not look into the light from inside of the scanner while copying or scanning. It is harmful to eyes.

In the document feeder

Using the document feeder (or duplex automatic document feeder (DADF)), you can load up to 50 sheets of paper (80 g/m^2, 21 lbs bond) for one job.

1 Flex or fan the edge of the paper stack to separate the pages before loading originals.

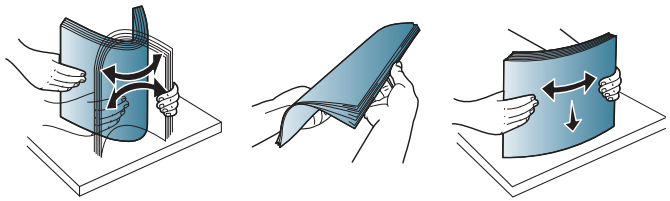

2 Load the original face up into the document feeder input tray. Make sure that the bottom of the original stack matches the paper size marked on the document input tray.

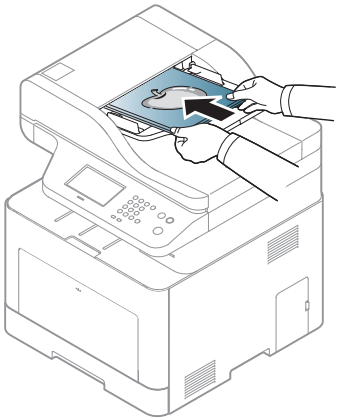

3 Adjust the document feeder width guides to the paper size.

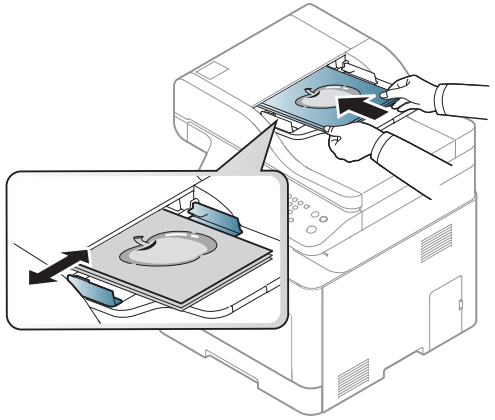

Dust on the document feeder glass may cause black lines on the printout. Always keep the glass clean (see "Cleaning the machine" on page 97).

Basic printing

For special printing features, refer to the Advanced Guide (see "Using advanced print features" on page 260).

Printing

If you are a Mac, Linux or UNIX operating systems user, refer to the Advanced Guide (see "Mac printing" on page 269, "Linux printing" on page 271 or "Unix printing" on page 272).

The following **Printing Preferences** window is for Notepad in Windows 7.

1 Open the document you want to print.

2 Select **Print** from the **File** menu.

3 Select your machine from the **Select Printer** list.

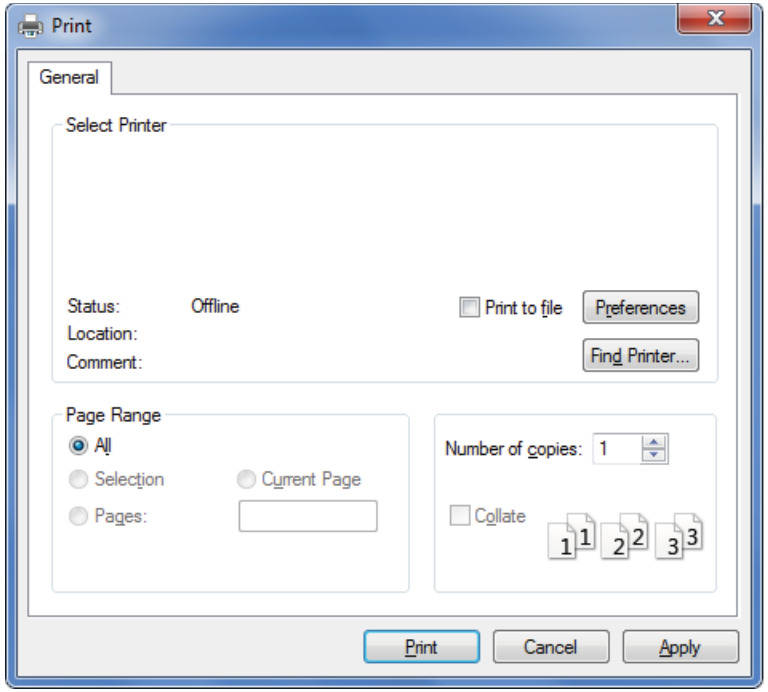

4 The basic print settings including the number of copies and print range are selected within the **Print** window.

To take advantage of the advanced printing features, click **Properties** or **Preferences** from the **Print** window (see "Opening printing preferences" on page 55).

5 To start the print job, click **OK** or **Print** in the **Print** window.

Basic printing

Canceling a print job

If the print job is waiting in the print queue or print spooler, cancel the job as follows:

- You can access this window by simply double-clicking the machine icon ( ) in the Windows task bar.
- You can also cancel the current job by pressing (**Cancel** or **Stop/Clear**) button on the control panel.

Basic printing

Opening printing preferences

- The **Printing Preferences** window that appears in this user's guide may differ depending on the machine in use.
- When you select an option in **Printing Preferences**, you may see a warning mark or . An mark means you can select that certain option but it is not recommended, and an mark means you cannot select that option due to the machine's setting or environment.

1 Open the document you want to print.

2 Select **Print** from the file menu. The **Print** window appears.

3 Select your machine from the **Select Printer**.

4 Click **Properties** or **Preferences**.

The screenshot may differ depending on model.

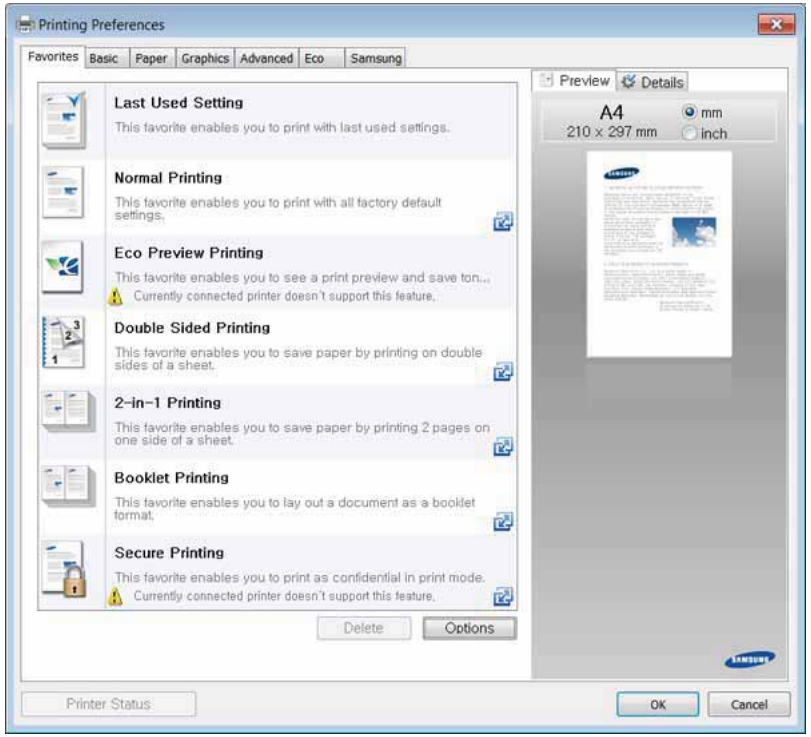

- You can apply **Eco** features to save paper and toner before printing (see "Easy Eco Driver" on page 299).
- You can check the machine's current status pressing the **Printer Status** button (see "Using Samsung Printer Status" on page 308).

Basic printing

Using a favorite setting

The **Favorites** option, which is visible on each preferences tab except for the **Favorites** and **Samsung** tab, allows you to save the current preferences for future use.

To save a **Favorites** item, follow these steps:

1 Change the settings as needed on each tab.

2 Enter a name for the item in the **Favorites** input box.

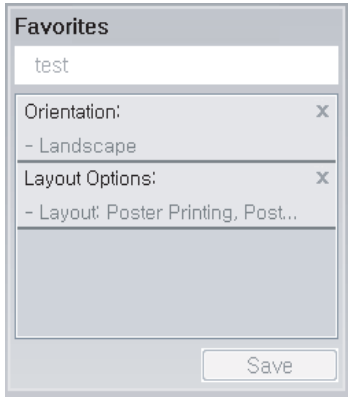

3 Click **Save**.

4 Enter name and description, and then select the desired icon.

5 Click **OK**. When you save **Favorites**, all current driver settings are saved.

To use a saved setting, select it in the **Favorites** tab. The machine is now set to print according to the settings you have selected.

To delete saved settings, select it in the **Favorites** tab and click **Delete**.

Using help

Click the option you want to know on the **Printing Preferences** window and press **F1** on your keyboard.

Basic printing

Eco printing

The **Eco** function cuts toner consumption and paper usage. The **Eco** function allows you to save print resources and lead you to eco-friendly printing.

If you press the **Eco** button from the control panel, eco mode is enabled. The default setting of Eco mode is duplex, Multiple Pages per Side (2-up), Skip Blank Pages.

You can set the altitude value from **Device Settings** in Samsung Easy Printer Manager program.

- For Windows and Mac users, you set from **Samsung Easy Printer Manager** > **(Switch to advanced mode)** > **Device Settings**, see "Device Settings" on page 307.

Setting Eco mode on the control panel

- Accessing menus may differ from model to model (see "Menu overview" on page 30 or "Control panel overview" on page 23).
- It may be necessary to press **OK** to navigate to lower-level menus for some models.

1 Select (**Menu**) > **System Setup** > **Machine Setup** > **Eco Settings** on the control panel.

Or press **Eco** on the control panel.

Or select **Eco** > **Settings** > **Next** on the touch screen.

2 Select the option you want and press **OK**.

- **Default Mode:** Select this to turn on or off the eco mode.
  - **Off**: Set the eco mode off.
  - **On**: Set the eco mode on.

If you set the eco mode on with a passcode from the SyncThru™ Web Service (**Settings** tab > **Machine Settings** > **System** > **Eco Settings**) or Samsung Easy Printer Manager (**Device Settings** > **Eco**), the **On force** message appears. You have to enter the passcode to change the eco mode status.

- **Change Template:** Follow the settings from Syncthru™ Web Service or Samsung Easy Printer Manager. Before you select this item, you must set the eco function in SyncThru™ Web Service (**Settings** tab > **Machine Settings** > **System** > **Eco Settings**) or Samsung Easy Printer Manager (**Device Settings** > **Eco**).
  - **Select Template**
    - **Default Eco**: The machine is set to **Default Eco** mode.
    - **Custom Eco**: Change any necessary values.

3 Press **OK** to save the selection.

Setting eco mode on the driver

To take advantage of the advanced printing features, click **Properties** or **Preferences** from the **Print** window (see "Opening printing preferences" on page 55).

Open the Eco tab to set Eco mode. When you see the eco image ( ), that means the eco mode is currently enabled.

Eco options

- **Printer Default:** Follows the settings from the machine's control panel.
- **None:** Disables Eco mode.
- **Eco Printing:** Enables eco mode. Activate the various Eco items you want to use.
- **Passcode:** If the administrator fixed to enable the Eco mode, you have to enter the passcode to change the status.

Passcode button: You can set from SyncThru™ Web Service (**Settings** tab > **Machine Settings** > **System** > **Eco Settings**) or Samsung Easy Printer Manager (**Device Settings** > **Eco**), the passcode button is activated. To change the print settings, click on this button, enter the passcode or need to contact the administrator.

Result simulator

Result Simulator shows the results of reduced emission of carbon dioxide, used electricity, and the amount of saved paper in accordance with the settings you selected.

- The results are calculated on the basis that the total number of printed paper is one hundred without a blank page when the Eco mode is disabled.
- Refers to the calculation coefficient about CO2, energy, and paper from **IEA**, the index of Ministry of Internal Affairs and Communication of Japan and www.remanufacturing.org.uk. Each model has a different index.
- The power consumption in printing mode refers to the average printing power consumption of this machine.
- The actual amount displayed is only an estimate as the actual amount may differ depending on the operating system used, computing performance, application software, connection method, media type [thickness], media size, job complexity, etc.

Secure printing

- Some menus may not appear on the display depending on options or models. If so, it is not applicable to your machine.
- You might not be able to print a complex document using the RAM Disk. Install an optional memory to print a complex document.

Basic printing

When you use a printing device in an office, school or other public place, you can protect your personal documents or confidential information by using the secure printing feature.

Starting secure printing from the SyncThru™ Web Service

1. Access a web browser, such as Internet Explorer, from Windows.

   Enter the machine IP address of your printer (http://xxx.xxx.xxx.xxx) in the address field and press the Enter key or click **Go**.

2. Click Login on the upper right of SyncThru™ Web Service website (see "Logging into SyncThru™ Web Service" on page 300).

3. **Settings** > **Machine Settings** > **System** > **RAM Disk**.

4. Enable **RAM Disk**.

This features may not appear on the display depending on options or models. If so, it is not applicable to your machine.

Printing secure documents from the control panel

Accessing menus may differ from model to model (see "Menu overview" on page 30 or "Control panel overview" on page 23).

1. Select (**Menu**) > **Job Management** > **Secured Job** on the control panel.

   OR

   For the model with a touch screen, select (**Document Box**) > **System Boxes** > **Next** > **Secured Print** on the touch screen.

2. Select the document to print.

3. Enter the password that you set from the printer driver.

4. Print or delete the document.

Basic copying

- For special printing features, refer to the Advanced Guide (see "Copy" on page 218).
- Accessing menus may differ from model to model (see "Menu overview" on page 30 or "Control panel overview" on page 23).

Basic copy

1 Select (copy) > (**Menu**) > **Copy Feature** on the control panel.

Or select (**Menu**) > **Copy Feature** on the control panel.

Or select **Copy** > **Basic Copy** > (settings) on the touch screen.

2 Place a single document face down on the document glass, or load the documents face up into the document feeder (see "Loading originals" on page 50).

3 If you want to customize the copy settings including **Reduce/Enlarge**, **Darkness**, **Original Type** and more by using the control panel buttons (see "Changing the settings for each copy" on page 60).

4 Enter the number of copies using the arrow or number keypad, if necessary.

5 Press (**Start**).

If you need to cancel the copying job during the operation, press (**Stop** or **Stop/Clear**) button and the copying will stop.

Changing the settings for each copy

Your machine provides default settings for copying so that you can quickly and easily make a copy.

- If you press the (**Stop** or **Stop/Clear**) button twice while setting the copy options, all of the options you have set for the current copy job will be canceled and returned to their default status. Or, they will automatically return to their default status after the machine completes the copy in progress.
- Accessing menus may differ from model to model (see "Menu overview" on page 30).
- It may be necessary to press **OK** to navigate to lower-level menus for some models.

Darkness

If you have an original containing faint marking and dark images, you can adjust the brightness to make a copy that is easier to read.

Basic copying

1 Select (copy) > (**Menu**) > **Copy Feature** > **Darkness** on the control panel.

Or press **Darkness** on the control panel.

Or select **Copy** > **Basic Copy** > (settings) >**Darkness** on the touch screen.

2 Select the option you want and press **OK**.

For example, the **Light+5** being the lightest, and the **Dark+5** being the darkest.

3 Press (**Stop/Clear**) button or home( ) icon to return to ready mode.

Original Type

The original setting is used to improve the copy quality by selecting the document for the current copy job.

1 Select (copy) > (**Menu**) > **Copy Feature** > **Original Type** on the control panel.

Or select (**Menu**) > **Copy Feature** > **Original Type** on the control panel.

Or select **Copy** > **Basic Copy** > (settings) > **Original Type** on the touch screen.

2 Select the option you want and press **OK**.

- **Text**: Use for originals containing mostly text.
- **Text/Photo**: Use for originals with mixed text and photographs.

If texts in the printout is blurry, select **Text** to get the clear texts.

- **Photo**: Use when the originals are photographs.
- **Magazine**: Use when the originals are magazines.

3 Press (**Stop/Clear**) button or home( ) icon to return to ready mode.

Reduced or enlarged copy

You can reduce or enlarge the size of a copied image from 25% to 400% from the document feeder or scanner glass.

Basic copying

- This feature may not be available depending on model or optional goods (see "Variety feature" on page 8).
- If the machine set to Eco mode, reduce and enlarge features are not available.

To select from the predefined copy sizes

1 Select (copy) > (**Menu**) > **Copy Feature** > **Reduce/Enlarge** on the control panel.

Or select (**Menu**) > **Copy Feature** > **Reduce/Enlarge** on the control panel.

Or select **Copy** > **Custom Copy** > (settings) > **Reduce/Enlarge** on the touch screen.

2 Select the option you want and press **OK**.

3 Press (**Stop/Clear**) button or home( ) icon to return to ready mode.

To scale the copy by directly entering the scale rate

1 Select (copy) > (**Menu**) > **Copy Feature** > **Reduce/Enlarge** > **Custom** on the control panel.

Or select (**Menu**) > **Copy Feature** > **Reduce/Enlarge**> **Custom** on the control panel.

Or select **Copy** > **Custom Copy** > (settings) > **Reduce/Enlarge** > **Custom** on the touch screen.

2 Enter the copy size you want using the numeric keypad.

3 Press **OK** to save the selection.

4 Press (**Stop/Clear**) button or home( ) icon to return to ready mode.

When you make a reduced copy, black lines may appear at the bottom of your copy.

ID card copying

Your machine can print 2-sided originals on one sheet.

Basic copying

The machine prints one side of the original on the upper half of the paper and the other side on the lower half without reducing the size of the original. This feature is helpful for copying a small-sized item such as business card.

- The original must be placed on the scanner glass to use this feature.
- If the machine set to Eco mode, this feature is not available.

Depending on the model, the operating procedure may differ.

1 Press **ID Copy** on the control panel.

Or select (**Menu**) > **Copy Feature** > **Layout** > **ID Copy** on the control panel.

Or select **Copy** > **ID Copy** on the touch screen.

2 Place the front side of an original facing down on the scanner glass where arrows indicate as shown. Then, close the scanner lid.

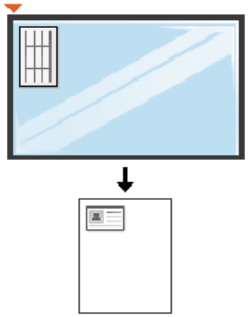

3 **Place Front Side and Press [Start]** appears on the display.

4 Press (**Start**).

Your machine begins scanning the front side and shows **Place Back Side and Press [Start]**.

5 Turn the original over and place it on the scanner glass where arrows indicate as shown. Then, close the scanner lid.

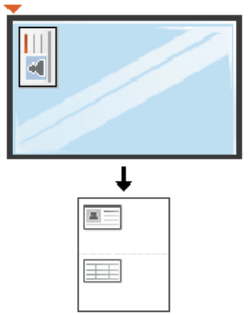

6 Press (**Start**) button.

Basic copying

- If you do not press the (**Start**) button, only the front side will be copied.
- If the original is larger than the printable area, some portions may not be printed.

Basic scanning

For special scanning features, refer to the Advanced Guide (see "Scan features" on page 274).

Basic Scanning

This is the normal and usual procedure for scanning originals.

This is a basic scanning method for USB-connected machine.

- Accessing menus may differ from model to model.
- It may be necessary to press **OK** to navigate to lower-level menus for some models.
- If you want to scan using the network, refer to the Advanced Guide (see "Scanning from network connected machine" on page 275).

1 Place a single document face down on the document glass, or load the documents face up into the document feeder (see "Loading originals" on page 50).

2 Select (scan) > **Scan To PC** on the control panel.

Or select **Scan** > **Local PC** on the touch screen.

If you see **Not Available** message, check the port connection, or select **Enable Scan from Device Panel** in **Samsung Easy Printer Manager** > Switch to advanced mode > **Scan to PC Settings**.

3 Select the scan destination you want and press **OK**.

Default setting is **My Documents**.

- You can create and save the frequently used settings as a profile list. Also you can add and delete the profile and save each profile to a different path.
- To change the **Samsung Easy Printer Manager** > Switch to advanced mode > **Scan to PC Settings**.

4 Select the option you want and press **OK**.

5 Scanning begins.

Scanned image is saved in computer's **C:\Users\users name\My Documents**. The saved folder may differ, depending on your operating system or the application you are using.

Basic faxing

- For special faxing features, see "Fax features" on page 282.
- Accessing menus may differ from model to model (see "Menu overview" on page 30 or "Control panel overview" on page 23).

- You cannot use this machine as a fax via the internet phone. For more information ask your internet service provider.
- We recommend using traditional analog phone services (PSTN: Public Switched Telephone Network) when connecting telephone lines to use a fax machine. If you use other Internet services (DSL, ISDN, VoIP), you can improve the connection quality by using the Micro-filter. The Micro-filter eliminates unnecessary noise signals and improves connection quality or Internet quality. Since the DSL Micro-filter is not provided with the machine, contact your Internet service provider for use on DSL Micro-filter.

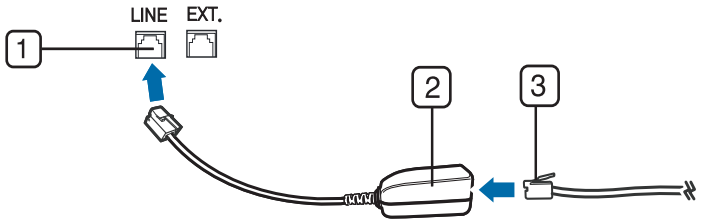

1 Line port
2 Micro filter
3 DSL modem / Telephone line (see "Rear view" on page 22).

Preparing to fax

Before you send or receive a fax, you need to connect the supplied line cord to your telephone wall jack (see "Rear view" on page 22). Refer to the Quick Installation Guide how to make a connection. The method of making a telephone connection is different from one country to another.

Sending a fax

When you place the originals, you can use either the document feeder or the scanner glass. If the originals are placed on both the document feeder and the scanner glass, the machine will read the originals on the document feeder first, which has higher priority in scanning.

1 Place a single document face down on the document glass, or load the documents face up into the document feeder (see "Loading originals" on page 50).

2 Select (fax) on the control panel.

Or select **Fax** > **Memory Send** > (settings) on the touch screen.

3 Adjust the resolution and the darkness to suit your fax needs (see "Adjusting the document settings" on page 68).

Basic faxing

4 Enter the destination fax number (see "Keypad letters and numbers" on page 253).

5 Press (**Start**) on the control panel. The machine starts to scan and send the fax to the destinations.

- If you want to send a fax directly from your computer, use Samsung Network PC Fax (see "Sending a fax in the computer" on page 283).
- When you want to cancel a fax job, press (**Stop** or **Stop/Clear**) button before the machine starts transmission.
- If you used the scanner glass, the machine shows the message asking to place another page.

Sending a fax manually

Perform the following to send a fax using (**On Hook Dial**) on the control panel.

1 Place a single document face down on the document glass, or load the documents face up into the document feeder (see "Loading originals" on page 50).

2 Select (fax) on the control panel.

Or select **Fax** > **On Hook Dial** > (settings) on the touch screen.

3 Adjust the resolution and the darkness to suit your fax needs (see "Adjusting the document settings" on page 68).

4 Press (**On Hook Dial**) on the control panel or lift the handset.

5 Enter a fax number using the number keypad on the control panel.

6 Press (**Start**) on the control panel when you hear a high-pitched fax signal from the remote fax machine.

Sending a fax to multiple destinations

You can use the multiple send feature, which allows you to send a fax to multiple locations. Originals are automatically stored in memory and sent to a remote station. After transmission, the originals are automatically erased from memory.

You cannot send faxes with this feature if you have chosen super fine as an option or if the fax is in color.

1 Place a single document face down on the document glass, or load the documents face up into the document feeder (see "Loading originals" on page 50).

2 Select (fax) on the control panel.

Or select **Fax** > **SpeedDial Send** or **Group Dial Send** > (settings) on the touch screen.

3 Adjust the resolution and the darkness to suit your fax needs (see "Adjusting the document settings" on page 68).

4 Select (**Menu**) > **Fax Feature** > **Multi Send** on the control panel.

Or select **Next** on the touch screen.

5 Enter the number of the first receiving fax machine and press **OK**.

You can press speed dial numbers or select a group dial number using the (**Address book**) button.

6 Enter the second fax number and press **OK**.

The display asks you to enter another fax number to send the document.

7 To enter more fax numbers, press **OK** when **Yes** appears and repeat steps 5 and 6.

- You can add up to 10 destinations.
- Once you have entered a group dial number, you cannot enter another group dial number.

8 When you have finished entering fax numbers, select **No** at the **Another No.?** prompt and press **OK**.

The machine begins sending the fax to the numbers you entered in the order in which you entered them.

Multi send report is printed after sending faxes.

Receiving a fax

Your machine is preset Fax mode at the factory. When you receive a fax, the machine answers the call on a specified number of rings and automatically receives the fax.

Adjusting the document settings

Before starting a fax, change the following settings according to your original's status to get the best quality.

- Accessing menus may differ from model to model (see "Menu overview" on page 30 or "Control panel overview" on page 23).
- It may be necessary to press **OK** to navigate to lower-level menus for some models.

Resolution

The default document settings produce good results when using typical text-based originals. However, if you send originals that are of poor quality, or contain photographs, you can adjust the resolution to produce a higher quality fax.

The resolution setting is applied to the current fax job. To change the default setting (see Advanced Guide).

1 Select (fax) > (**Menu**) > **Fax Feature** > **Resolution** on the control panel.

Or select **Fax** > select a fax such as **Memory Send**, **On Hook Dial**, **Delayed Send**, or etc. > (settings) > **Resolution** on the touch screen.

2 Select the option you want and press **OK**.

- **Standard**: Originals with normal sized characters.
- **Fine**: Originals containing small characters or thin lines or originals printed using a dot-matrix printer.
- **Super Fine**: Originals containing extremely fine detail. **Super Fine** mode is enabled only if the machine with which you are communicating also supports the Super Fine resolution.

- For memory transmission, **Super Fine** mode is not available. The resolution setting is automatically changed to **Fine**.
- When your machine is set to **Super Fine** resolution and the fax machine with which you are communicating does not support **Super Fine** resolution, the machine transmits using the highest resolution mode supported by the other fax machine.

- **Photo Fax**: Originals containing shades of gray or photographs.
- **Color Fax**: Original with colors.

- Memory transmission is not available in this mode.
- You can only send a color fax if the machine you are communicating with supports color fax reception and you send the fax manually.

3 Press (**Stop/Clear**) button or home( ) icon to return to ready mode.

Darkness

You can select the degree of darkness of the original document.

The darkness setting is applied to the current fax job. To change the default setting (see "Fax" on page 224).

1 Select (fax) > (**Menu**) > **Fax Feature** > **Darkness** on the control panel.

Or select **Fax** > select a fax such as **Memory Send**, **On Hook Dial**, **Delayed Send**, or etc. > (settings) > **Darkness** on the touch screen.

2 Select a darkness level you want.

3 Press (**Stop/Clear**) button or home( ) icon to return to ready mode.

Using USB memory device

This chapter explains how to use a USB memory device with your machine.

About USB memory

USB memory devices are available with a variety of memory capacities to give you more room for storing documents, presentations, downloaded music and videos, high resolution photographs or whatever other files you want to store or move.

You can do the following tasks on your machine by using a USB memory device.

- Scan documents and save them on a USB memory device
- Print data stored on a USB memory device
- Restore backup files to the machine's memory
- Format the USB memory device
- Check the available memory space

Plugging in a USB memory device

The USB memory port on the front of your machine is designed for USB V1.1 and USB V2.0 memory devices. Your machine supports USB memory devices with FAT16/FAT32 and a sector size of 512 bytes.

Check your USB memory device's file system from your dealer.

You must use only an authorized USB memory device with an A plug connector.

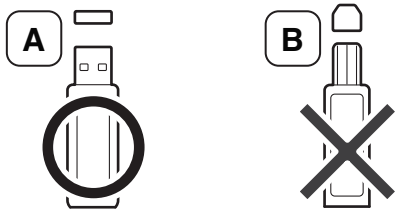

Use only a metal-shielded USB memory device.

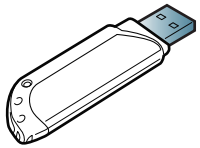

Only use a USB memory device that has obtained compatibility certification; otherwise, the machine might not recognize it.

- Do not remove the USB memory device while the machine is in operation or writing to or reading from USB memory. The machine warranty does not cover damage caused by user's misuse.
- If your USB memory device has certain features such as security settings and password settings, your machine may not automatically detect it. For details about these features, see the user's guide of the USB memory device.

Using USB memory device

Scanning to a USB memory device

- Accessing menus may differ from model to model (see "Menu overview" on page 30 or "Control panel overview" on page 23).
- It may be necessary to press **OK** to navigate to lower-level menus for some models.

You can scan a document and save the scanned image onto a USB memory device.

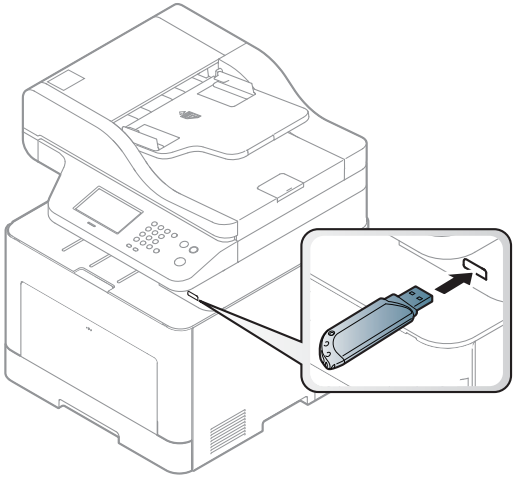

Scanning

1. Insert a USB memory device into the USB memory port on your machine.
2. Place a single document face down on the document glass, or load the documents face up into the document feeder (see "Loading originals" on page 50).
3. Select (scan) > **Scan To USB** > **OK** on the control panel.

   Or select **Scan** > **USB** > **Next** > **Start** on the touch screen.

   The machine begins scanning.

After scanning is complete, you can remove the USB memory device from the machine.

Customizing Scan to USB

You can specify image size, file format, or color mode for each scanning to USB job.

Using USB memory device

1 Select (scan) > (**Menu**) > **Scan Feature** > **USB Feature** on the control panel.

Or select **Scan to** > (**Menu**) > **Scan Feature** > **USB Feature** on the control panel.

Or select **Direct USB** > **Scan to USB** > (settings) on the touch screen.

2 Select the setting option you want appears.

- **Original Size:** Sets the image size.
- **Original Type:** Sets the original document's.
- **Resolution:** Sets the image resolution.
- **Color Mode:** Sets the color mode. If you select **Mono** in this option, you cannot select JPEG in **File Format**.
- **File Format:** Sets the file format in which the image is to be saved. When you select **TIFF** or **PDF**, you can select to scan multiple pages. If you select **JPEG** in this option, you cannot select **Mono** in **Color Mode**.
- **Duplex:** Sets the duplex mode.
- **Darkness:** Sets the brightness level to scan an original.
- **File Name:** Sets the file name.
- **File Policy:** Sets the policy to save files between overwirting or renaming
- **PDF Encryption:** Sets the encrypts **PDF** files.

3 Select the desired status you want and press **OK**.

4 Repeat steps 2 and 3 to set other setting options.

5 Press (**Stop/Clear**) button or home( ) icon to return to ready mode.

You can change the default scan settings. Refer to the Advanced Guide.

Printing from a USB memory device

You can directly print files stored on a USB memory device.

File is supported by Direct Print option.

- PRN: Only files created by provided driver with your machine are compatible.

If you print PRN files created from other machine, the printout would be different.

- TIFF: TIFF 6.0 Baseline
- JPEG: JPEG Baseline
- PDF: PDF 1.7 or lower version.

Using USB memory device

To print a document from a USB memory device

1. Insert a USB memory device into the USB memory port on your machine, and then press **Direct USB**.
2. Select **USB Print**.
3. Select the folder or file you want and press **OK**.

   If you see [+] or [D] in the front of a folder name, there are one or more files or folders in the selected folder.
4. Select the number of copies to be printed or enter the number.
5. Press **OK**, **Start** or **Print** to start printing the selected file.

   After printing the file, the display asks if you want to print another job.
6. Press **OK** when **Yes** appears to print another job, and repeat from step 2.

   Otherwise, press the left/right arrow to select **No** and press **OK**.
7. Press (**Stop/Clear**) button or home( ) icon to return to ready mode.

Backing up data

Data in the machine's memory can be accidentally erased due to power failure or storage failure. Backup helps you protect the system settings by storing them as backup files on a USB memory device.

Backing up data

1. Insert the USB memory device into the USB memory port on your machine.
2. Select (**Menu**) > **System Setup** > **Machine Setup** > **Export Setting** on the control panel.

   Or select **Setup** > **Machine Setup** > **Next** > **Initial Setup** > **Export Setting** on the touch screen.
3. Select **Setup Data**, **Address Book** and press **OK**.

   The data is backed up to the USB memory.
4. Press (**Stop/Clear**) button or home( ) icon to return to ready mode.

Using USB memory device

Restoring data

1 Insert the USB memory device on which the backup data is stored in to the USB memory port.

2 Select (**Menu**) > **System Setup** > **Machine Setup** > **Import Setting** on the control panel.

Or select **Setup** > **Machine Setup** > **Next** > **Initial Setup** > **Import Setting** on the touch screen.

3 Select **Setup Data**, **Address Book** and press **OK**.

4 Select the file you want to restore and press **OK**.

5 Press **OK** when **Yes** appears to restore the backup file to the machine.

6 Press (**Stop/Clear**) button or home( ) icon to return to ready mode.

Managing USB memory

You can delete image files stored on a USB memory device one by one or all at once by reformatting the device.

If you see [+] or [D] in the front of a folder name, there are one or more files or folders in the selected folder.

After deleting files or reformatting a USB memory device, files cannot be restored. Therefore, confirm that you no longer need the data before deleting it.

Deleting an image file

For touch screen model, select **Direct USB** > **File Manage** > **Next** > select a file > (settings) > **Delete** on the touch screen.

1 Insert a USB memory device into the USB memory port on your machine, and then press **Direct USB**.

2 Select **File Manage** > **Delete** and press **OK**.

3 Select the file you want to delete and press **OK**.

4 Select **Yes**.

5 Press (**Stop/Clear**) button or home( ) icon to return to ready mode.

Using USB memory device

Formatting a USB memory device

For touch screen model, select **Direct USB** > **File Manage** > **Next** > select a file > (settings) > **Format** on the touch screen.

1 Insert a USB memory device into the USB memory port on your machine, and then press **Direct USB**.

2 Select **File Manage** > **Format** and press **OK**.

3 Select **Yes**.

4 Press (**Stop/Clear**) button or home( ) icon to return to ready mode.

Viewing the USB memory status

You can check the amount of memory space available for scanning and saving documents.

For touch screen model, select **Direct USB** > **Show Space** > **Next** on the touch screen.

1 Insert a USB memory device into the USB memory port on your machine, and then press **Direct USB**.

2 Select **Check Space**.

3 The available memory space appears on the display.

4 Press (**Stop/Clear**) button or home( ) icon to return to ready mode.

3. Maintenance

This chapter provides information about purchasing supplies, accessories and maintenance parts available for your machine.

- Ordering supplies and accessories 77
- Available consumables 78
- Available accessories 80
- Available maintenance parts 81
- Storing the toner cartridge 82
- Redistributing toner 84
- Replacing the toner cartridge 86
- Replacing the waste toner container 89
- Installing accessories 91
- Monitoring the supplies life 95
- Setting the toner low alert 96
- Cleaning the machine 97
- Tips for moving & storing your machine 103

Ordering supplies and accessories

Available accessories may differ from country to country. Contact your sales representatives to obtain the list of available supplies, and maintenance parts.

To order Samsung-authorized supplies, accessories, and maintenance parts, contact your local Samsung dealer or the retailer where you purchased your machine. You can also visit **www.samsung.com/supplies**, and then select your country/region to obtain the contact information for service.

Available consumables

When supplies reach the end of their life spans, you can order the followings of supplies for your machine:

Type	Average yield[a]	Part name
Toner cartridge	• Average continuous black cartridge yield: Approx. 6,000 standard pages (Black) • Average continuous color cartridge yield: Approx. 3,500 standard pages (Yellow/Magenta/Cyan)	• CLT-K505L: Black • CLT-Y505L: Yellow • CLT-M505L: Magenta • CLT-C505L: Cyan
Waste toner container	• Approx. 14,000 standard pages (Black) • Approx. 3,500 standard pages (Yellow/Magenta/Cyan)	CLT-W506

a. Declared yield value in accordance with ISO/IEC 19798. The number of pages may be affected by operating environment, printing interval, graphics, media type and media size.

Depending on the options, percentage of image area and job mode used, the toner cartridge's lifespan may differ.

When purchasing new toner cartridges or other supplies, these must be purchased in the same country as the machine you are using. Otherwise, new toner cartridges or other supplies will be incompatible with your machine due to different configurations of toner cartridges and other supplies according to the specific country conditions.

Available consumables

Samsung does not recommend using non-genuine Samsung toner cartridge such as refilled or remanufactured toner. Samsung cannot guarantee non-genuine Samsung toner cartridge's quality. Service or repair required as a result of using non-genuine Samsung toner cartridges will not be covered under the machine’s warranty.

Available accessories

You can purchase and install accessories to enhance your machine's performance and capacity.

- Some features and optional goods may not be available depending on model or country (see "Features by model" on page 6).

Accessory	Function	Part name
Memory module	Extends your machine's memory capacity.	ML-MEM380 (1,024 MB)
Optional tray	If you are experiencing frequent paper supply problems, you can attach an additional 520[a] sheet tray.	CLP-S680A
IEEE 1284 Port[b]	Allows you to use various interface. • When installing the printer driver with an IEEE1284B parallel connector, the machine might not be found and after installing the printer driver, only basic printing features are available. • If you want to check the machine's status or set the settings, connect the machine to a computer with a USB cable or a network. • If you use the IEEE 1284B parallel connector, you can not use the USB cable.	ML-PAR100

a. Plain paper 80 g/m2 (20 lb bond).
b. The optional IEEE 1284 port can be used by plugging in both the USB port and the 5V output port.