Available maintenance parts

You need to replace the maintenance parts at specific intervals to keep the machine in the best condition and avoid print quality and paper feeding problems resulting from the worn-out parts. Maintenance parts are mostly rollers, belts and pads. However, the replacement period and parts may differ depending on the model. Replacing maintenance parts can be performed only by an authorized service provider, dealer, or the retailer where you bought the machine. To purchase maintenance parts, contact the retailer where you bought the machine. The replacement period for the maintenance parts is informed by the Samsung Printer Status program. Or if your machine supports display screen, a message is displayed in the display screen. The replacement period varies based on the operating system used, computing performance, application software, connecting method, paper type, paper size, and job complexity.

Storing the toner cartridge

Toner cartridges contain components that are sensitive to light, temperature and humidity. Samsung suggests users follow these recommendations to ensure optimal performance, highest quality, and longest life from your new Samsung toner cartridge.

Store the cartridge in the same environment in which the printer will be used. This should be in controlled temperature and humidity conditions. The toner cartridge should remain in its original and unopened package until installation – if original packaging is not available, cover the top opening of the cartridge with paper and store in a dark cabinet.

Opening the cartridge package prior to use dramatically shortens its useful shelf and operating life. Do not store on the floor. If the toner cartridge is removed from the printer, follow the instructions below to store the toner cartridge properly.

- Store the cartridge inside the protective bag from the original package.
- Store lying flat (not standing on end) with the same side facing up as if it were installed in the machine.
- Do not store consumables in any of the following conditions:
  - Temperature greater than 40°C (104°F).
  - Humidity range less than 20% or greater than 80%.
  - An environment with extreme changes in humidity or temperature.
  - Direct sunlight or room light.
  - Dusty places.
  - A car for a long period of time.
  - An environment where corrosive gases are present.
  - An environment with salty air.

Handling instructions

- Do not touch the surface of the photoconductive drum in the cartridge.
- Do not expose the cartridge to unnecessary vibrations or shock.
- Never manually rotate the drum, especially in the reverse direction; this can cause internal damage and toner spillage.

Toner cartridge usage

Samsung Electronics does not recommend or approve the use of non-Samsung brand toner cartridges in your printer including generic, store brand, refilled, or remanufactured toner cartridges.

Samsung's printer warranty does not cover damage to the machine caused by the use of refilled, remanufactured, or non-Samsung brand toner cartridges.

Storing the toner cartridge

Estimated cartridge life

Estimated cartridge life (the life of the toner cartridge yield) depends on the amount of toner that print jobs require. The actual print yield may vary depending on the print density of the pages you print on, operating environment, percentage of image area, printing interval, media type and/or media size. For example, if you print a lot of graphics, the consumption of the toner is higher and you may need to change the cartridge more often.

Redistributing toner

When the toner cartridge is near the end of its life:

- White streaks or light printing occurs and/or density varies from side to side.
- The **Status** LED blinks red. The toner-related message saying that the toner is low may appear on the display.
- The computer's Samsung Printing Status program window appears on the computer telling you which color cartridge is low on toner (see "Using Samsung Printer Status" on page 308).

If this happens, you can temporarily improve print quality by redistributing the remaining toner in the cartridge. In some cases, white streaks or light printing will still occur even after you have redistributed the toner.

Illustrations on this user's guide may differ from your machine depending on its options or models. Check your machine type (see "Front view" on page 21).

- To prevent damage to the toner cartridge, do not expose it to light for more than a few minutes. Cover it with a piece of paper, if necessary.
- Do not touch the green area of the toner cartridge. Use the handle on the cartridge to avoid touching this area.
- Do not use sharp objects such as a knife or scissors to open the toner cartridge package. They might scratch the drum of the cartridge.
- If toner gets on your clothing, wipe it off with a dry cloth and wash clothing in cold water. Hot water sets toner into fabric.

Redistributing toner

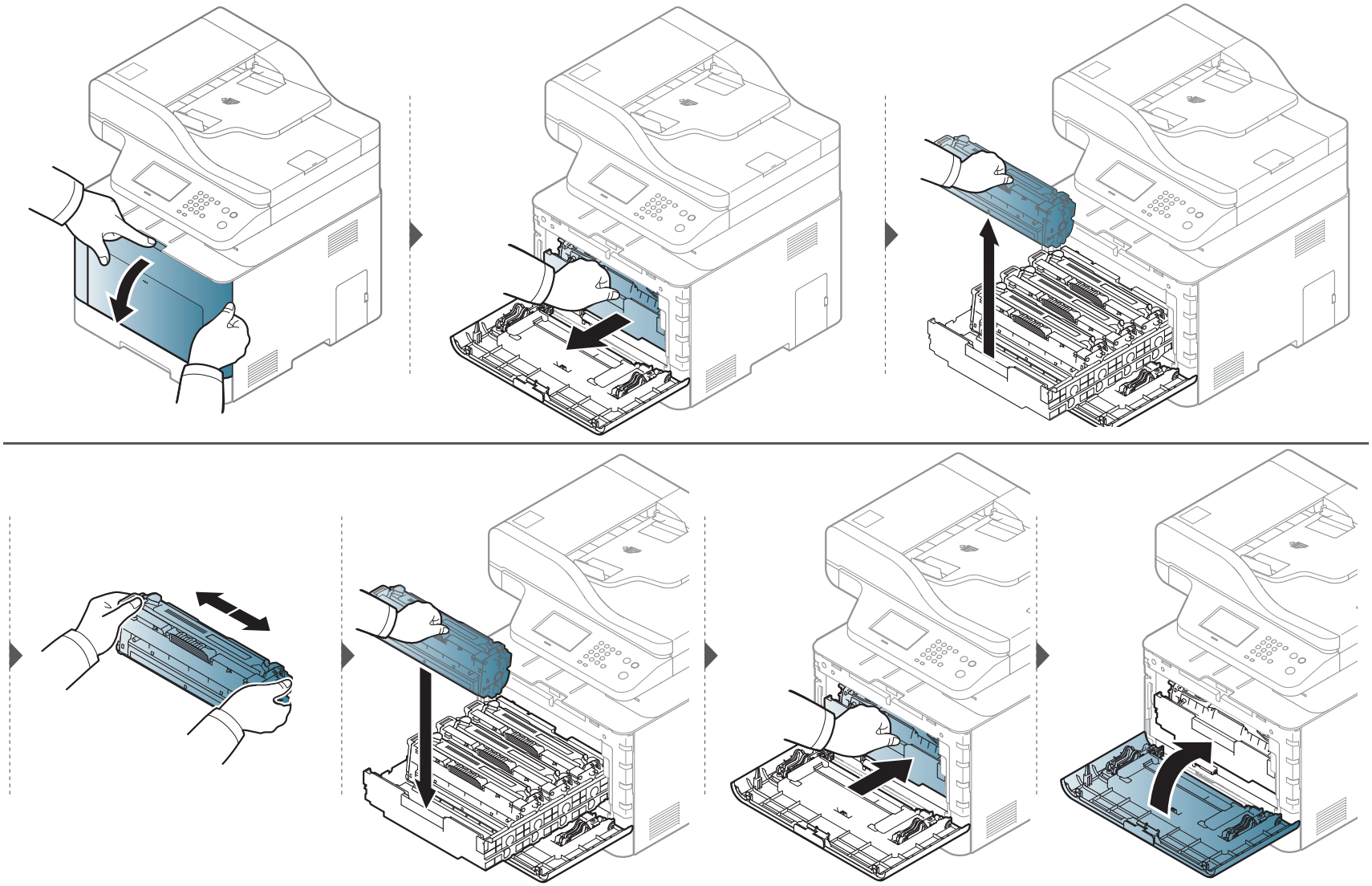

Replacing the toner cartridge

Click this link to open an animation about replacing a toner cartridge.

The machine uses four colors and has a different toner cartridge for each one: yellow (Y), magenta (M), cyan (C), and black (K).

- The status LED and the toner-related message on the display indicate when each individual toner cartridge should be replaced.
- The computer's Samsung Printing Status Program window appears on the computer telling you which color cartridge is empty on toner (see "Using Samsung Printer Status" on page 308).

Check the type of the toner cartridge for your machine (see "Available consumables" on page 78).

- Shake the toner cartridge thoroughly, it will increase the initial print quality.
- Illustrations on this user's guide may differ from your machine depending on its options or models. Check your machine type (see "Front view" on page 21).

- To prevent damage to the toner cartridge, do not expose it to light for more than a few minutes. Cover it with a piece of paper, if necessary.
- Do not touch the green area of the toner cartridge. Use the handle on the cartridge to avoid touching this area.
- Do not use sharp objects such as a knife or scissors to open the toner cartridge package. They might scratch the drum of the cartridge.
- If toner gets on your clothing, wipe it off with a dry cloth and wash clothing in cold water. Hot water sets toner into fabric.

Replacing the toner cartridge

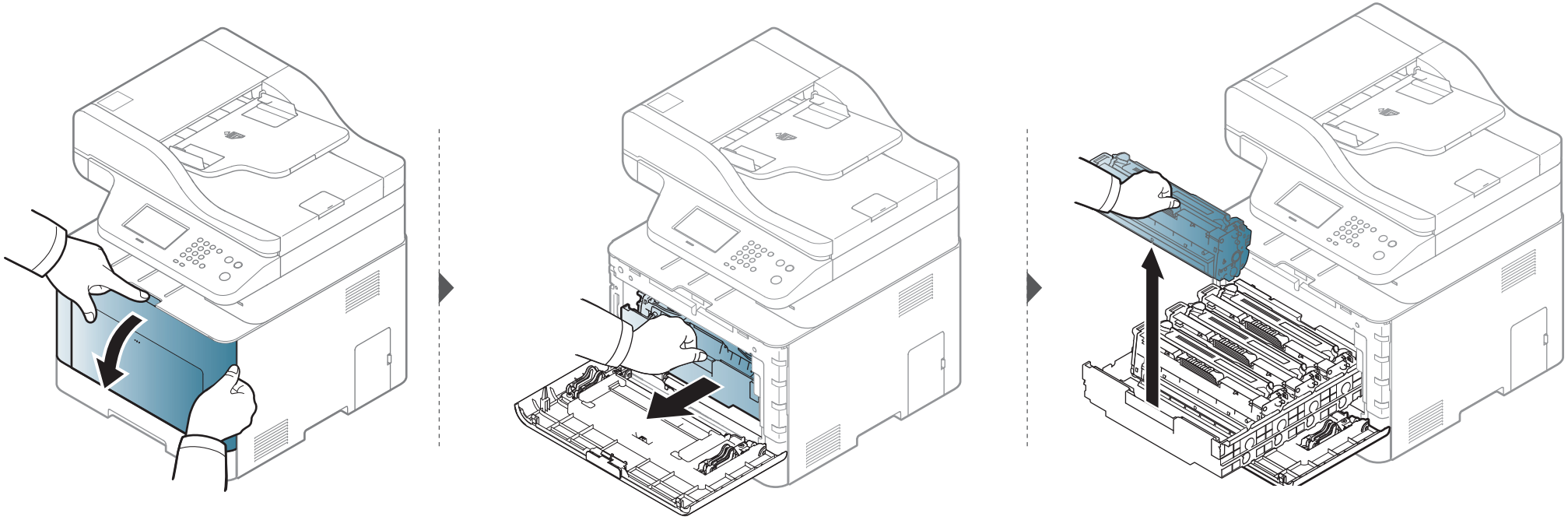

Replacing the toner cartridge

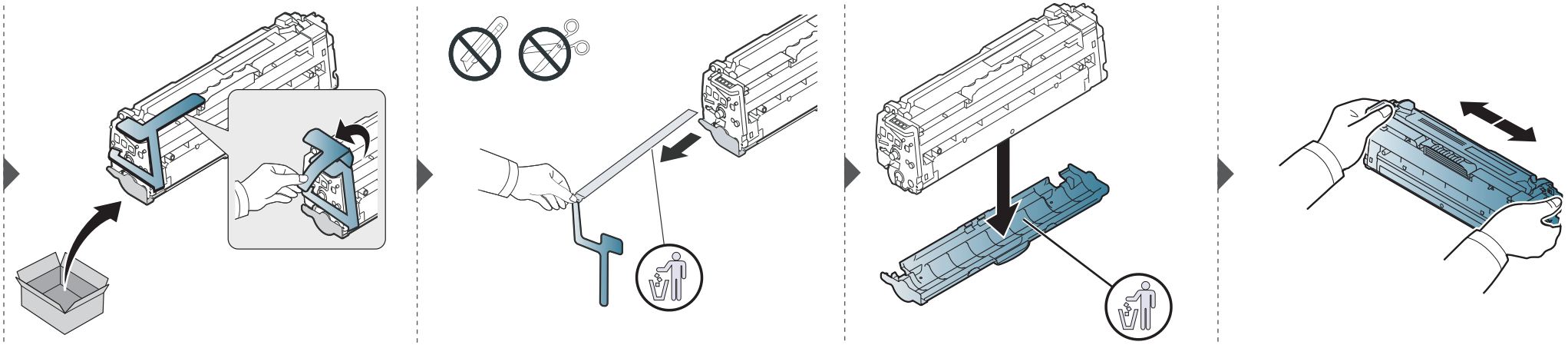

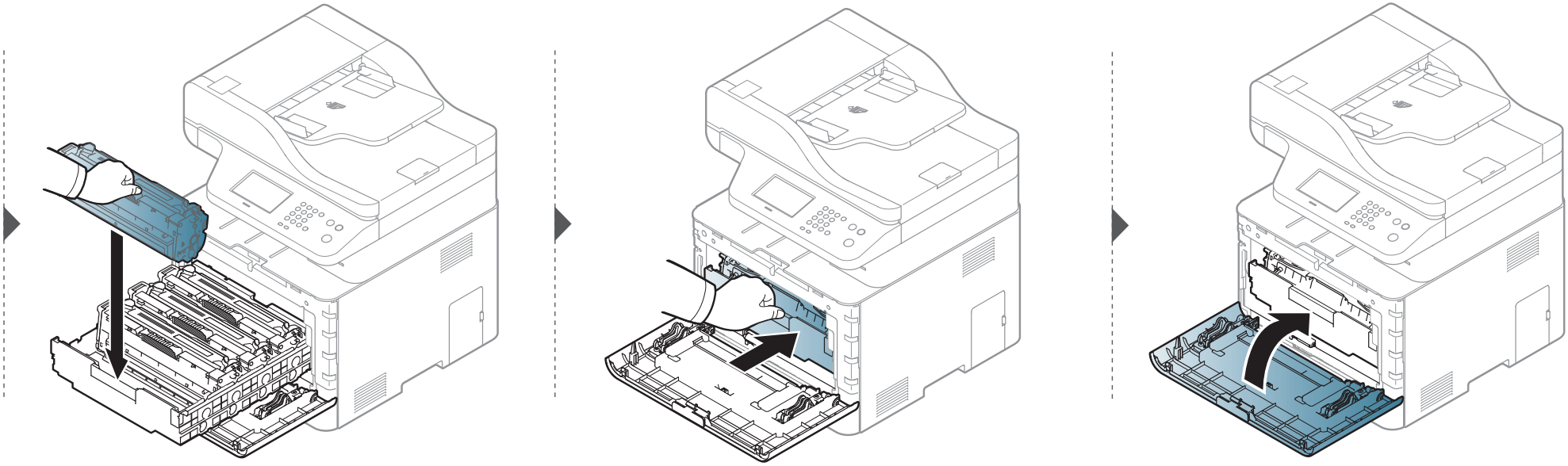

Replacing the waste toner container

When the life span of the waste toner container has expired, waste toner container-related message appears on the screen display of the control panel, indicating the waste toner container needs to be replaced. Check the waste toner container for your machine (see "Available consumables" on page 78).

- Toner particles can be released inside the machine but it does not mean the machine is damaged. Contact a service representative when print quality problems occur.
- When you pull out the waste toner container out of the machine, move the container carefully not to drop it from your hands.
- Make sure that you lay the waste toner container on a flat surface so that the toner does not spill.

Do not tilt or turn over the container.

Replacing the waste toner container

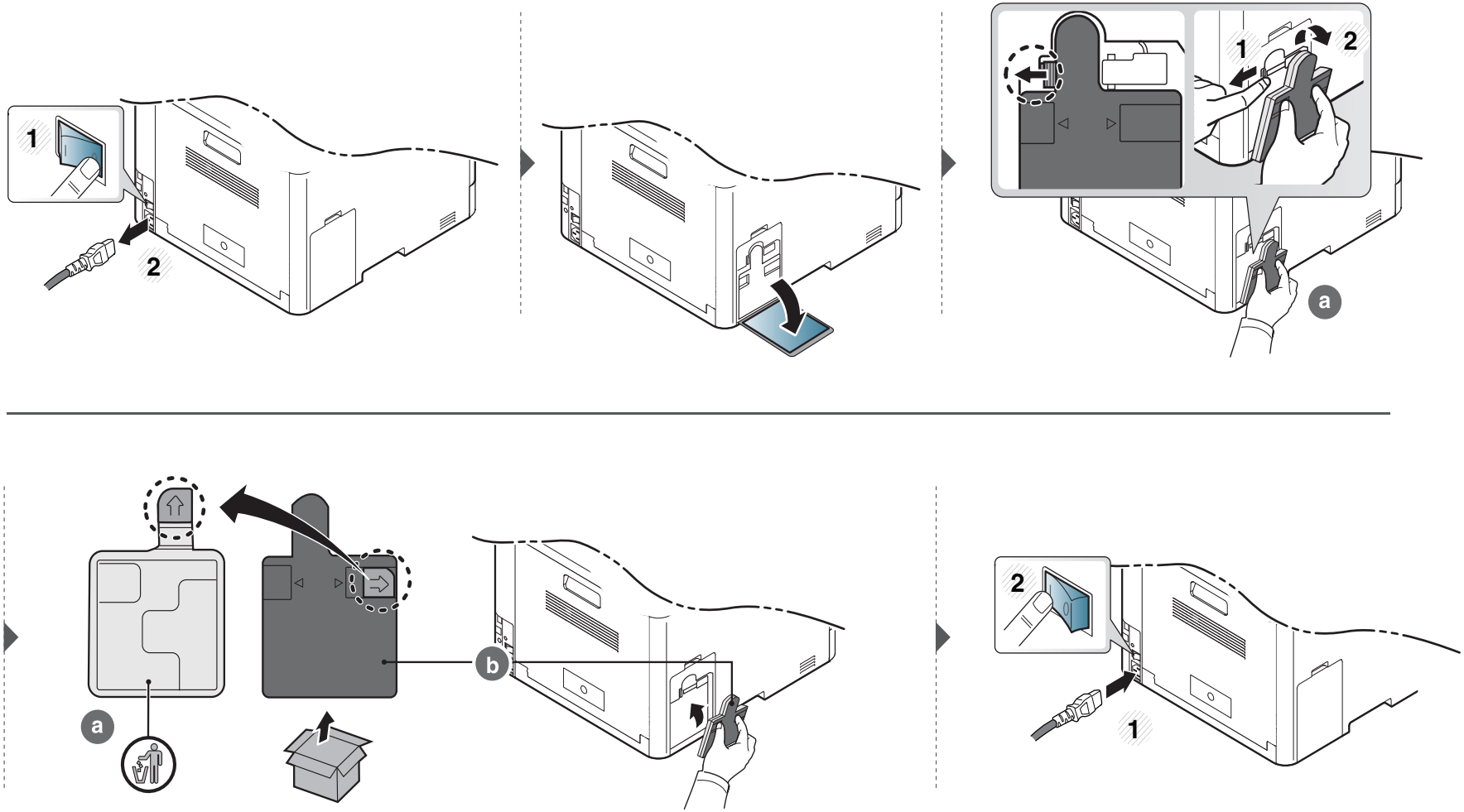

Installing accessories

Precautions

- Disconnect the power cord

  Never remove the control board cover while the power is turned on.

  To avoid the possibility of an electrical shock, always disconnect the power cord when installing or removing ANY internal or external accessories.

- Discharge static electricity

  The control board and internal accessories (network interface card or memory module) are sensitive to static electricity. Before installing or removing any internal accessories, discharge static electricity from your body by touching something metal, such as the metal back plate on any device plugged into a grounded power source. If you walk around before finishing the installation, repeat this procedure to discharge any static electricity again.

When installing accessories, the battery inside the machine is a service component. Do not change it by yourself. There is a risk of an explosion if battery is replaced by an incorrect type. Dispose used batteries according to the instructions.

Setting Device Options

When you install the optional devices such as optional tray, memory, etc, this machine automatically detects and sets the optional devices. If you cannot use the optional devices you installed in this driver, you can set the optional devices in **Device Options**.

1. Click the Windows **Start** menu.
   - For Windows 8, from **Charms**, select **Search** > **Settings**.
2. For Windows XP/2003, select **Printers and Faxes**.
   - For Windows 2008/Vista, select **Control Panel** > **Hardware and Sound** > **Printers**.
   - For Windows 7, select **Control Panel** > **Hardware and Sound** > **Devices and Printers**.
   - For Windows 8, search for **Devices and Printers**.
   - For Windows Server 2008 R2, select **Control Panel** > **Hardware** > **Devices and Printers**.
3. Right-click your machine.
4. For Windows XP/2003/2008/Vista, press **Properties**.

   For Windows 7, For Windows 8, and Windows Server 2008 R2, from context menus, select the **Printer properties**.

If **Printer properties** item has ▶ mark, you can select other printer drivers connected with selected printer.

5 Select **Device Options**.

The **Properties** window may differ depending on the driver or operating system you are using.

6 Select the appropriate option.

Some menus may not appear in the display depending on options or models. if so, it is not applicable to your machine.

- **Tray Options:** Select the optional tray you installed. You can select the tray.
- **Storage Options:** Select the optional memory you installed. If this feature is checked, you can select the **Print Mode**.
- **Printer Configuration:** Select the printer language for the print job.
- **Administrator Settings:** You can select the **Printer Status** and **EMF Spooling**.
- **Admin Job Accounting:** Allows you to associate user and account identification information with each document you print.
  - **User permission:** If you check this option, only users with user permission can start a print job.
  - **Group permission:** If you check this option, only groups with group permission can start a print job.

If you want to encrypt job accounting password, check **Job Accounting Password Encryption**.

- **Custom Paper Size Settings:** You can specify custom paper size.

7 Click **OK** until you exit the **Properties** or **Printer properties** window.

Installing accessories

Upgrading a memory module

Your machine has a dual in-line memory module (DIMM). Use this memory module slot to install additional memory. We recommend the use of only genuine Samsung DIMM's. You may void your warranty if it is determined that your machine problem is being caused by third party DIMM's.

The order information is provided for optional accessories (see "Available accessories" on page 80).

After installing the optional memory, you can use the advanced printing features, such as proofing a job and specifying of printing a secure print job in the printer properties window. You can control the active job queue and file policy in **Job Manage.** menu (see "Using optional device features" on page 292).

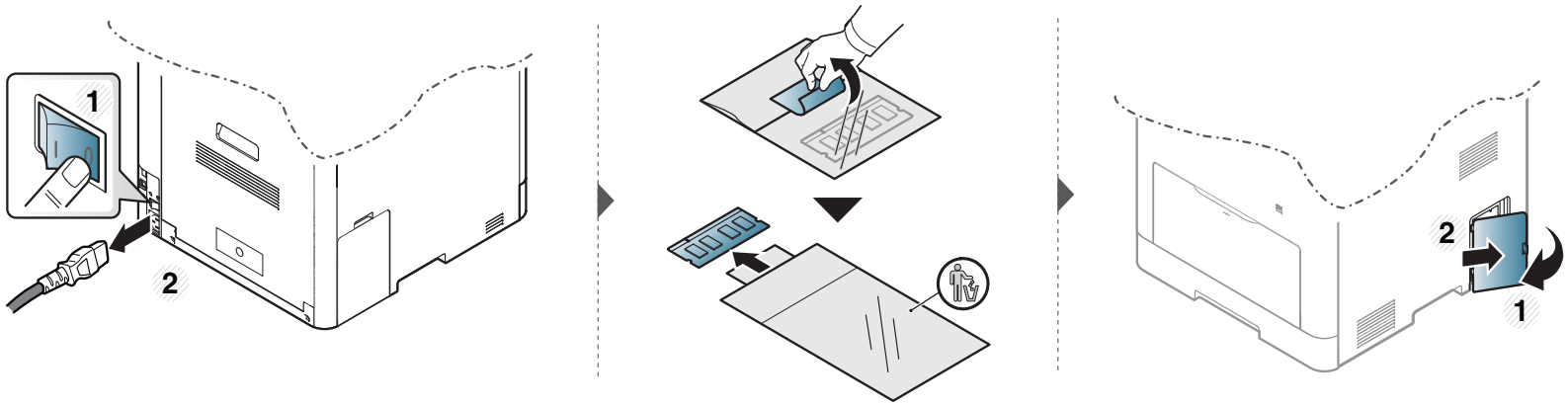

Installing accessories

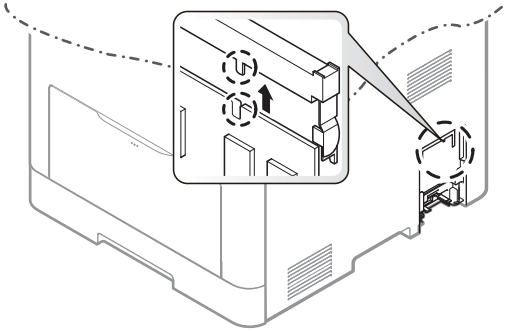

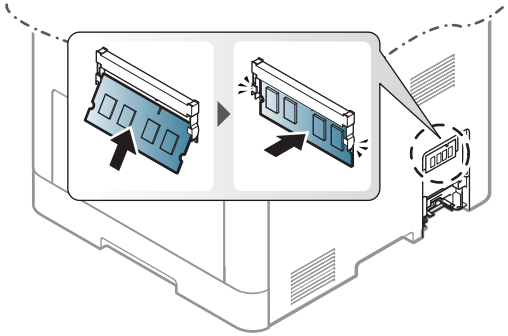

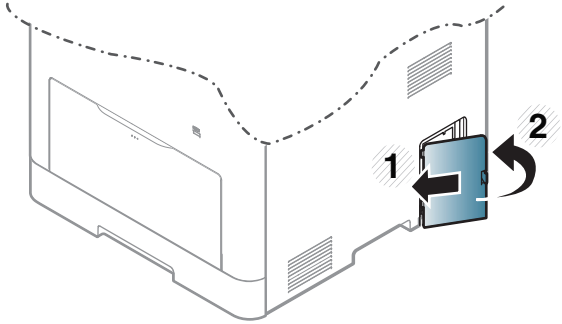

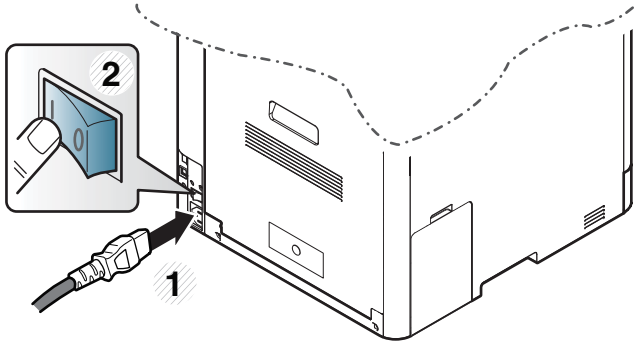

Monitoring the supplies life

If you experience frequent paper jams or printing problems, check the number of pages the machine has printed or scanned. Replace the corresponding parts, if necessary.

- Accessing menus may differ from model to model (see "Menu overview" on page 30).
- Some menus may not appear in the display depending on options or models. If so, it is not applicable to your machine.
- It may be necessary to press **OK** to navigate to lower-level menus for some models.

1 Select (**Menu**) > **System Setup** > **Maintenance** > **Supplies Life** on the control panel.

Or select **Setup** > **Machine Setup** > **Next** > **Report** > **Supplies Information** on the touch screen.

2 Select the option you want and press **OK**.

3 Press (**Stop/Clear**) button or home( ) icon to return to ready mode.

Setting the toner low alert

If the amount of toner in the cartridge is low, a message or LED informing the user to change the toner cartridge appears. You can set the option for whether or not this message or LED appears.

- Accessing menus may differ from model to model (see "Menu overview" on page 30).
- It may be necessary to press **OK** to navigate to lower-level menus for some models.
- You can set the machine's settings by using the **Device Settings** in Samsung Easy Printer Manager program.
  - For Windows and Mac users, you set from **Samsung Easy Printer Manager** > **(Switch to advanced mode)** > **Device Settings**, see "Device Settings" on page 307.

1 Select (**Menu**) > **System Setup** > **Maintenance** > **TonerLow Alert** on the control panel.

Or select **Setup** > **Machine Setup** > **Next** > **Initial Setup** > **Toner Status Alert** on the touch screen.

On the touch screen model, you can set the toner's **Warning Level** for the toner low error in the **Toner Status Alert** option. **Warning Level** means the remaining amount of toner (%) in the toner cartridge.

2 Select the option you want.

3 Press **OK** to save the selection.

Cleaning the machine

If printing quality problems occur or if you use your machine in a dusty environment, you need to clean your machine regularly to keep it in the best printing condition and use your machine longer.

- Cleaning the cabinet of the machine with cleaning materials containing large amounts of alcohol, solvents, or other strong substances can discolor or distort the cabinet.
- If your machine or the surrounding area is contaminated with toner, we recommend you use a cloth or tissue dampened with water to clean it. If you use a vacuum cleaner, toner blows in the air and might be harmful to you.

Cleaning the outside

Clean the machine cabinet with a soft, lint-free cloth. Dampen the cloth slightly with water, but be careful not to let any water drip onto or into the machine.

Cleaning the machine

Cleaning the inside

During the printing process, paper, toner, and dust particles can accumulate inside the machine. This buildup can cause print quality problems, such as toner specks or smearing. Cleaning the inside of the machine clears and reduces these problems.

- To prevent damage to the toner cartridge, do not expose it to light for more than a few minutes. Cover it with a piece of paper, if necessary.
- Do not touch the green area of the toner cartridge. Use the handle on the cartridge to avoid touching this area.
- Use a dry lint free cloth when cleaning the inside of the machine, be careful not to damage the transfer roller or any other inside parts. Do not use solvents such as benzene or thinner. Printing quality problems can occur and cause damage to the machine.

- Use a dry lint-free cloth to clean the machine.
- Turn the machine off and unplug the power cord. Wait for the machine to cool down. If your machine has a power switch, turn the power switch off before cleaning the machine.
- Illustrations on this user's guide may differ from your machine depending on its options or models. Check your machine type (see "Front view" on page 21).

Cleaning the machine

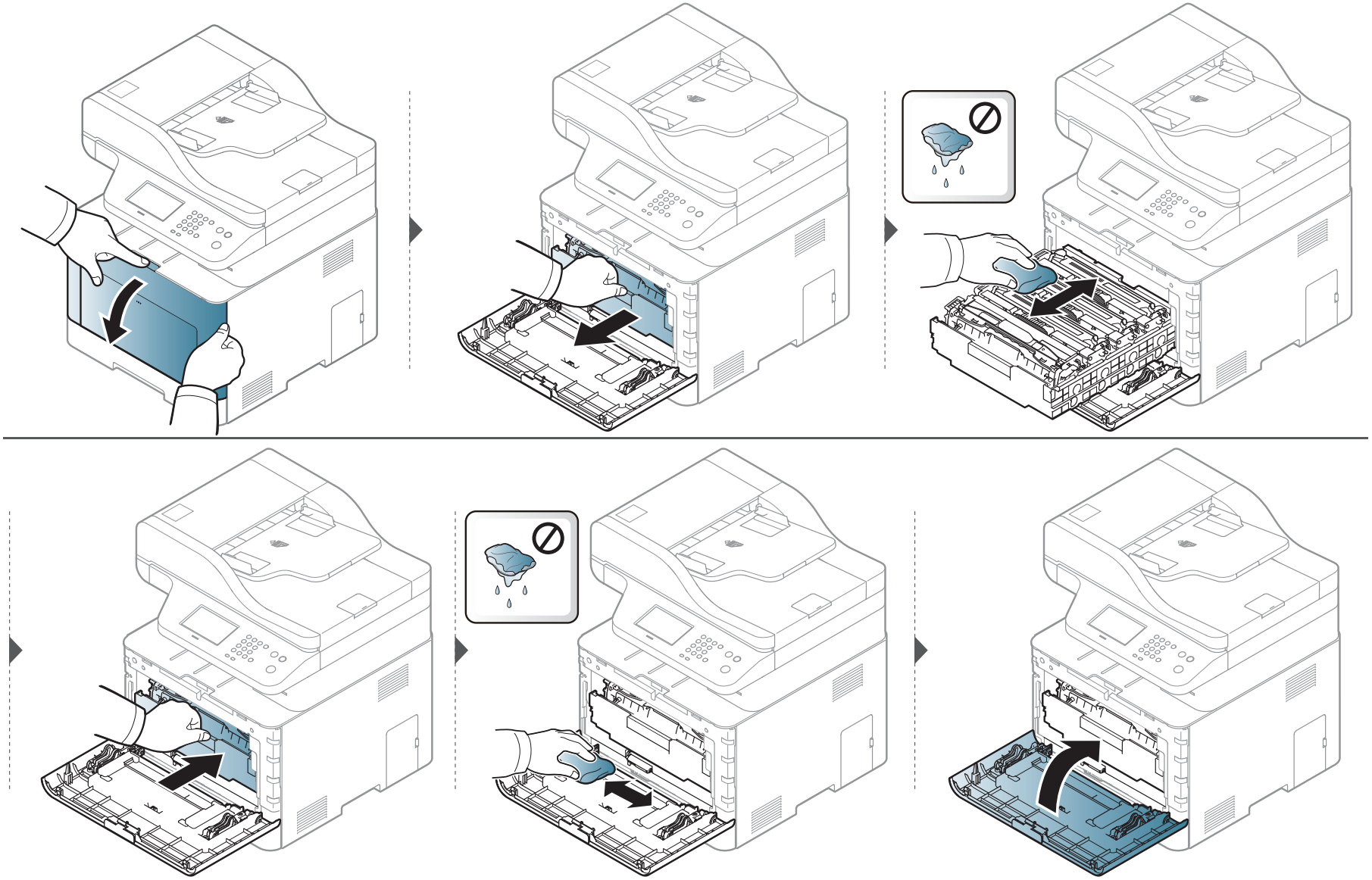

Cleaning the machine

Cleaning the pickup roller

- Turn the machine off and unplug the power cord. Wait for the machine to cool down. If your machine has a power switch, turn the power switch off before cleaning the machine.
- Illustrations on this user's guide may differ from your machine depending on its options or models. Check your machine type (see "Front view" on page 21).

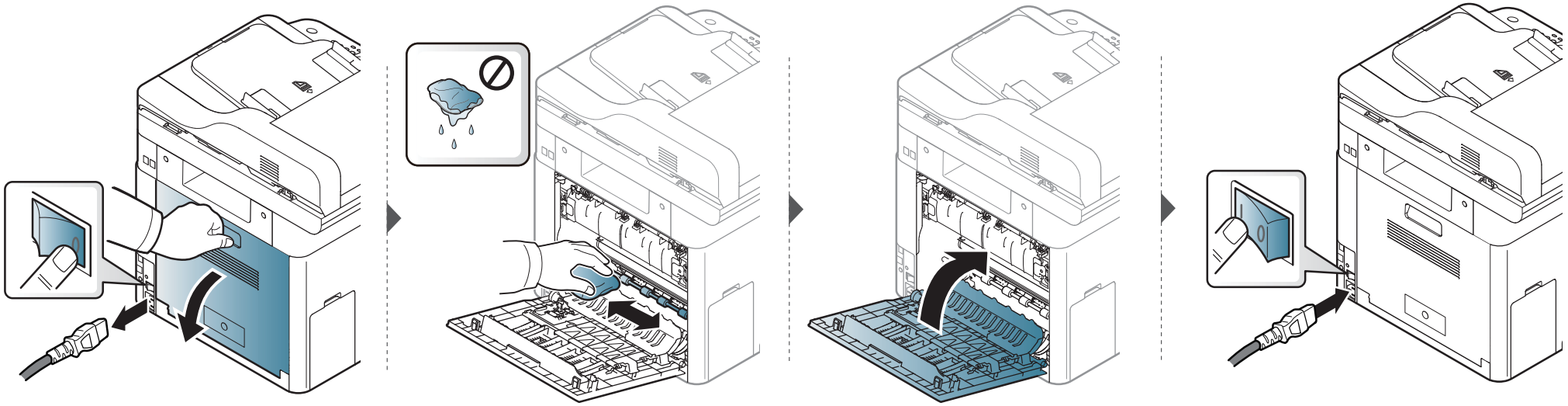

Cleaning the machine

Cleaning the scan unit

Keeping the scan unit clean helps ensure the best possible copies. We suggest that you clean the scan unit at the start of each day and during the day as needed.

- Turn the machine off and unplug the power cord. Wait for the machine to cool down. If your machine has a power switch, turn the power switch off before cleaning the machine.
- Illustrations on this user's guide may differ from your machine depending on its options or models. Check your machine type (see "Front view" on page 21).

1 Slightly dampen a soft, lint-free cloth or paper towel with water.

2 Lift and open the scanner lid.

3 Wipe the surface of the scanner until it is clean and dry.

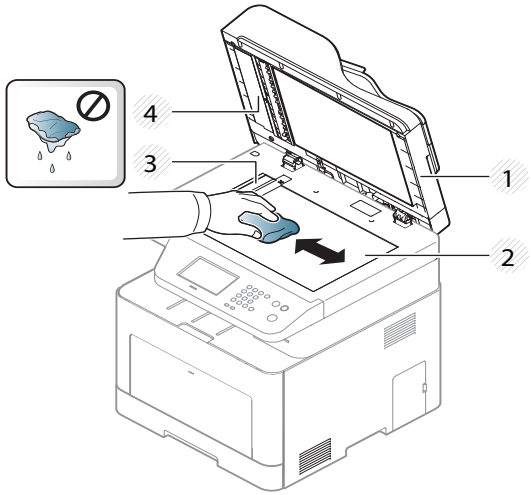

1 Scanner lid
2 Scanner glass
3 Document feeder glass
4 White bar

4 Close the scanner lid.

Tips for moving & storing your machine

- When moving the machine, do not tilt or turn it upside down. Otherwise, the inside of the machine may be contaminated by toner, which can cause damage to the machine or reduce print quality.
- When moving the machine, make sure at least two people are holding the machine securely.

4. Troubleshooting

This chapter gives helpful information for what to do if you encounter an error.

- Tips for avoiding paper jams 105
- Clearing original document jams 106
- Clearing paper jams 111
- Understanding the status LED 120
- Understanding display messages 122

This chapter gives helpful information for what to do if you encounter an error. If your machine has a display screen, check the message on the display screen first to solve the error.

If you cannot find a solution to your problem in this chapter, refer to the **Troubleshooting** chapter in the Advanced Guide (see "Troubleshooting" on page 316).

If you cannot find a solution in the User's Guide or the problem persists, call for service.

Tips for avoiding paper jams

By selecting the correct medias, most paper jams can be avoided. To avoid paper jams, refer to the following guidelines:

- Ensure that the adjustable guides are positioned correctly (see "Tray overview" on page 39).
- Do not remove paper from the tray while your machine is printing.
- Flex, fan, and straighten paper before loading.
- Do not use creased, damp, or highly curled paper.
- Do not mix paper type and size in a tray.
- Use only recommended print media (see "Print media specifications" on page 131).