User's Guide

Samsung Multifunction *Xpress*

C48x / C48xW series
C48xFN / C48xFW series

BASIC

This guide provides information concerning the installation, basic operation and troubleshooting on windows.

ADVANCED

This guide provides information about the installation, advanced configuration, operation and troubleshooting on various OS environments.

Some features may not be available depending on models or countries.

BASIC

1. Introduction

Key benefits 5
Features by model 7
Useful to know 12
About this user's guide 13
Safety information 14
Machine overview 20
Control panel overview 24
Turning on the machine 28
Installing the driver locally 29
Reinstalling the driver 31

2. Menu Overview and Basic Setup

Menu overview 33
Machine's basic settings 37
Media and tray 39
Basic printing 52
Basic copying 58
Basic scanning 63
Basic faxing 64
Using USB memory device 68

3. Maintenance

Ordering supplies and accessories 74
Available supplies 75
Available maintenance parts 76
Storing the toner cartridge 77
Redistributing toner 78
Replacing the toner cartridge 80
Replacing the imaging unit 82
Replacing the waste toner container 84
Monitoring the supplies life 86
Setting the toner low alert 87
Cleaning the machine 88
Tips for moving & storing your machine 92

4. Troubleshooting

Tips for avoiding paper jams 94
Clearing paper jams 95
Understanding the status LED 102
Understanding display messages 104

5. Appendix

Specifications 111
Regulatory information 120
Copyright 133

1. Introduction

This chapter provides information you need to know before using the machine.

- Key benefits 5
- Features by model 7
- Useful to know 12
- About this user's guide 13
- Safety information 14
- Machine overview 20
- Control panel overview 24
- Turning on the machine 28
- Installing the driver locally 29
- Reinstalling the driver 31

Key benefits

Environmentally friendly

- To save toner and paper, this machine supports Eco feature (see "Eco printing" on page 55).
- To save paper, you can print multiple pages on one single sheet of paper (see "Using advanced print features" on page 214).
- To save paper, you can print on both sides of the paper (double-sided printing) (Manual) (see "Using advanced print features" on page 214).
- To save electricity, this machine automatically conserves electricity by substantially reducing power consumption when not in use.
- We recommend using recycled paper for saving energy.

Fast high resolution printing

- You can print in a full range of colors using cyan, magenta, yellow, and black.
- You can print with a resolution of up to 2,400 x 600 dpi effective output (600 x 600 x 2 bit).
- Fast, on-demand printing.

Convenience

- Simply touch your cell phone on the NFC tag on your printer and get the print job done (see "Using the NFC feature" on page 173).
- You can print on the go from your smartphone or computer using Samsung Cloud Print apps (see "Samsung Cloud Print" on page 182).
- You can print on the go from your smartphone or computer using Google Cloud Print enabled apps (see "Google Cloud Print™" on page 185).
- Easy Capture Manager allows you to easily edit and print whatever you captured using the Print Screen key on the keyboard (see "Easy Capture Manager" on page 243).
- Samsung Easy Printer Manager and Printing Status is a program that monitors and informs you of the machine's status and allows you to customize the machine's settings (see "Using Samsung Easy Printer Manager" on page 252 or "Using Samsung Printer Status" on page 255).
- Samsung Easy Document Creator is an application to help users compile and share large documents or other scanned or faxed information digitally. (see "Using Samsung Easy Document Creator" on page 254).
- Smart Update allows you to check for the latest software and install the latest version during the printer driver installation process. This is available only for Windows.
- If you have Internet access, you can get help, support application, machine drivers, manuals, and order information from the Samsung website, www.samsung.com > find your product > Support or Downloads.

Key benefits

Wide range of functionality and application support

- Supports various paper sizes (see "Print media specifications" on page 113).
- Print watermark: You can customize your documents with words, such as “**CONFIDENTIAL**” (see "Using advanced print features" on page 214).
- Print posters: The text and pictures of each page of your document are magnified and printed across the multiple sheets of paper and can then be taped together to form a poster (see "Using advanced print features" on page 214).
- You can print in various operating systems (see "System requirements" on page 116).
- Your machine is equipped with a USB interface and/or a network interface.

Supports various wireless network setting method

- Using the WPS (Wi-Fi Protected Setup™) button
  - You can easily connect to a wireless network using the WPS button on the machine and the access point (a wireless router).
- Using the USB cable or a network cable
  - You can connect and set various wireless network settings using a USB cable or a network cable.
- Using the Wi-Fi Direct
  - You can conveniently print from your mobile device using the Wi-Fi or Wi-Fi Direct feature.

See "Introducing wireless set up methods" on page 155.

Features by model

Some features and optional goods may not be available depending on model or country.

Operating System

Operating System	C48x series	C48xW series	C48xFN series	C48xFW series
Windows	●	●	●	●
Mac	●	●	●	●
Linux	●	●	●	●

(●: Supported, Blank: Not supported)

Features by model

Software

You can install the printer driver and software when you insert the software CD into your CD-ROM drive.

For Windows, select the printer driver and software in the **Select Software to Install** window.

Software		C48x series	C48xW series	C48xFN series	C48xFW series
SPL printer driver		●	●	●	●
PCL printer driver		●	●	●	●
PS printer driver[a]		●	●	●	●
XPS printer driver[a]		●	●	●	●
Samsung Easy Printer Manager	**Scan to PC settings**	●	●	●	●
	Fax to PC settings			●	●
	Advanced Settings	●	●	●	●
Samsung Easy Document Creator		●	●	●	●
Samsung Easy Color Manager[a]		●	●	●	●
Samsung Printer Status		●	●	●	●
Samsung Printer Center		●	●	●	●
SyncThru™ Web Service			●	●	●

Features by model

Software		C48x series	C48xW series	C48xFN series	C48xFW series
Samsung Eco Driver Pack[b]		●	●	●	●
Samsung Stylish Driver Pack[c]		●	●	●	●
SyncThru™ Web Service		●	●	●	●
Fax	**Samsung Network PC Fax**			●	●
Scan	**Twain scan driver**	●	●	●	●
	WIA scan driver	●	●	●	●

a. Download the software from the Samsung website and install it: (http://www.samsung.com > find your product > Support or Downloads). Before installing, check whether your computer's OS support the software.

b. To use the Easy Eco Driver features, the Eco Driver Pack must be installed.

c. The printer driver includes a user interface that is optimized for touchscreens. To use this UI, click **Samsung Printer Center** > **Device Options** and then select **Stylish User Interface** (see "Using Samsung Printer Center" on page 246).

(●: Supported, Blank: Not supported)

Features by model

Variety feature

Features	C48x series	C48xW series	C48xFN series	C48xFW series
Hi-Speed USB 2.0	●	●	●	●
Network Interface Ethernet 10/100 Base TX wired LAN		●	●	●
Network Interface 802.11b/g/n wireless LAN[a]		●		●
NFC (Near Field Communication)		●		●
Mopria™		●	●	●
Samsung Cloud Print		●	●	●
Google Cloud Print™		●	●	●
AirPrint		●	●	●
Eco printing（Control panel)		●	●	●
Duplex (2-sided) printing (Manual)[b]	●	●	●	●
USB memory interface		●	●	●
Automatic Document Feeder (ADF)			●	●

a. Depending on your country, wireless LAN card may not be available. For some countries, only 802.11 b/g can be applied. Contact your local Samsung dealer or the retailer where you bought your machine.
b. Windows only.

(●: Supported, Blank: Not supported)

Features by model

Features		C48x series	C48xW series	C48xFN series	C48xFW series
Fax	Multi-send			●	●
	Delay send			●	●
	Priority send			●	●
	Secure receive			●	●
	Send/ Receive forward - fax/ email			●	●
Scan	Scan to PC	●	●	●	●
Copy	ID card copying	●	●	●	●
	Reduced or enlarged copying	●	●	●	●
	Collation	●	●	●	●
	2-up/4-up	●	●	●	●
	Adjust background	●	●	●	●

(●: Supported, Blank: Not supported)

Useful to know

The machine does not print.

- Open the print queue list and remove the document from the list (see "Canceling a print job" on page 53).
- Remove the driver and install it again (see "Installing the driver locally" on page 29).
- Select your machine as your default machine in your Windows (see "Setting your machine as a default machine" on page 213).

Where can I purchase accessories or supplies?

- Inquire at a Samsung distributor or your retailer.
- Visit www.samsung.com/supplies. Select your country/region to view product service information.

The status LED flashes or remains constantly on.

- Turn the product off and on again.
- Check the meanings of LED indications in this manual and troubleshoot accordingly (see "Understanding the status LED" on page 102).

A paper jam has occurred.

- Open and close the cover (see "Front view" on page 21).
- Check the instructions on removing jammed paper in this manual and troubleshoot accordingly (see "Clearing paper jams" on page 95).

Printouts are blurry.

- The toner level might be low or uneven. Shake the toner cartridge (see "Redistributing toner" on page 78).
- Try a different print resolution setting (see "Opening printing preferences" on page 54).
- Replace the toner cartridge (see "Replacing the toner cartridge" on page 80).

Where can I download the machine's driver?

- You can get help, support application, machine drivers, manuals, and order information from the Samsung website, www.samsung.com > find your product > Support or Downloads.

About this user’s guide

This user's guide provides information for your basic understanding of the machine as well as detailed steps to explain machine usage.

- Do not discard this manual, and keep it for future reference.
- Read the safety information before using the machine.
- If you have a problem using the machine, refer to the troubleshooting chapter.
- Terms used in this user’s guide are explained in the glossary chapter.
- All illustrations in this user’s guide may differ from your machine depending on its options or model you purchased.
- The screenshots in this administrator’s guide may differ from your machine depending on the machine’s firmware/driver version.
- The procedures in this user’s guide are mainly based on Windows 7.

Conventions

Some terms in this guide are used interchangeably, as below:

- Document is synonymous with original.
- Paper is synonymous with media, or print media.
- Machine refers to printer or MFP.

General icons

Icon	Text	Description
	Warning	Used to alert users to the possibility of personal injury.
	Caution	Gives users information to protect the machine from possible mechanical damage or malfunction.
	Note	Provides additional information or detailed specification of the machine function and feature.

Safety information

These warnings and precautions are included to prevent injury to you and others, and to prevent any potential damage to your machine. Be sure to read and understand all of these instructions before using the machine. After reading this section, keep it in a safe place for future reference.

Important safety symbols

Explanation of all icons and signs used in this chapter

	Warning	Hazards or unsafe practices that may result in severe personal injury or death.
	Caution	Hazards or unsafe practices that may result in minor personal injury or property damage.
	Do not attempt.	

Operating environment

Warning

	Do not use if the power cord is damaged or if the electrical outlet is not grounded. This could result in electric shock or fire.
	Do not place anything on top of the machine (water, small metal or heavy objects, candles, lit cigarettes, etc.). This could result in electric shock or fire.
	• If the machine gets overheated, it releases smoke, makes strange noises, or generates an odd odor, immediately turn off the power switch and unplug the machine. • The user should be able to access the power outlet in case of emergencies that might require the user to pull the plug out. This could result in electric shock or fire.
	Do not bend, or place heavy objects on the power cord. Stepping on or allowing the power cord to be crushed by a heavy object could result in electric shock or fire.
	Do not remove the plug by pulling on the cord; do not handle the plug with wet hands. This could result in electric shock or fire.

Safety information

Caution

	During an electrical storm or for a period of non-operation, remove the power plug from the electrical outlet. This could result in electric shock or fire.
	Be careful, the paper output area is hot. Burns could occur.
	If the machine has been dropped, or if the cabinet appears damaged, unplug the machine from all interface connections and request assistance from qualified service personnel. Otherwise, this could result in electric shock or fire.
	If the machine does not operate properly after these instructions have been followed, unplug the machine from all interface connections and request assistance from qualified service personnel. Otherwise, this could result in electric shock or fire.
	If the plug does not easily enter the electrical outlet, do not attempt to force it in. Call an electrician to change the electrical outlet, or this could result in electric shock.
	Do not allow pets to chew on the AC power, telephone or PC interface cords. This could result in electric shock or fire and/or injury to your pet.

Operating method

Caution

	Do not forcefully pull the paper out during printing. It can cause damage to the machine.
	Be careful not to put your hand between the machine and paper tray. You may get injured.
	Be care when replacing paper or removing jammed paper. New paper has sharp edges and can cause painful cuts.
	When printing large quantities, the bottom part of the paper output area may get hot. Do not allow children to touch. Burns can occur.
	When removing jammed paper, do not use tweezers or sharp metal objects. It can damage the machine.
	Do not allow too many papers to stack up in the paper output tray. It can damage the machine.

Safety information

	Do not block or push objects into the ventilation opening. This could result in elevated component temperatures which can cause damage or fire.
	Use of controls or adjustments or performance of procedures other than those specified herein may result in hazardous radiation exposure.
	This machine's power reception device is the power cord. To switch off the power supply, remove the power cord from the electrical outlet.

Installation / Moving

Warning

	Do not place the machine in an area with dust, humidity, or water leaks. This could result in electric shock or fire.

	Place the machine in the environment where it meets the operating temperature and humidity specification. Do not use the machine when it is below freezing temperature or has recently been moved from a location below freezing temperature. Doing so may damage the machine. Only operate the machine when the internal temperature of the machine is within the operating temperature and humidity specifications. Otherwise, quality problems can occur and cause damage to the machine. See "General specifications" on page 111.

Safety information

Caution

	Before moving the machine, turn the power off and disconnect all cords. The information below are only suggestions based on the units weight. If you have a medical condition that prevents you from lifting, do not lift the machine. Ask for help, and always use the appropriate amount of people to lift the device safely. Then lift the machine: • If the machine weighs under 20 kg (44.09 lbs), lift with 1 person. • If the machine weighs 20 kg (44.09 lbs) - 40kg (88.18 lbs), lift with 2 people. • If the machine weighs more than 40 kg (88.18 lbs), lift with 4 or more people. The machine could fall, causing injury or machine damage.
	Choose a flat surface with enough space for ventilation to place the machine. Also consider the space required to open the cover and trays. The place should be well-ventilated and be far from direct light, heat, and humidity.
	When using the machine for a long period of time or printing a large number of pages in a non-ventilated space, it could pollute the air and be harmful to your health. Place the machine in a well-ventilated space or open a window to circulate the air periodically.

	Do not place the machine on an unstable surface. The machine could fall, causing injury or machine damage.
	Use only No.26 AWG[a] or larger, telephone line cord, if necessary. Otherwise, it can cause damage to the machine.
	Make sure you plug the power cord into a grounded electrical outlet. Otherwise, this could result in electric shock or fire.
	Use the power cord supplied with your machine for safe operation. If you are using a cord which is longer than 2 meters (6 feet) with a 110V machine, then the gauge should be 16 AWG or larger. Otherwise, it can cause damage to the machine, and could result in electric shock or fire.
	Do not put a cover over the machine or place it in an airtight location, such as a closet. If the machine is not well-ventilated, this could result in fire.
	Do not overload wall outlets and extension cords. This can diminish performance, and could result in electric shock or fire.
	The machine should be connected to the power level which is specified on the label. If you are unsure and want to check the power level you are using, contact the electrical utility company.

a. AWG: American Wire Gauge

Safety information

Maintenance / Checking

Caution

	Unplug this product from the wall outlet before cleaning the inside of the machine. Do not clean the machine with benzene, paint thinner or alcohol; do not spray water directly into the machine. This could result in electric shock or fire.
	When you are working inside the machine replacing supplies or cleaning the inside, do not operate the machine. You could get injured.
	Keep cleaning supplies away from children. Children could get hurt.
	Do not disassemble, repair or rebuild the machine by yourself. It can damage the machine. Call a certified technician when the machine needs repairing.
	To clean and operate the machine, strictly follow the user's guide provided with the machine. Otherwise, you could damage the machine.

	Keep the power cable and the contact surface of the plug clean from dust or water. Otherwise, this could result in electric shock or fire.
	• Do not remove any covers or guards that are fastened with screws. • Fuser units should only be repaired by a certified service technician. Repair by non-certified technicians could result in fire or electric shock. • The machine should only be repaired by a Samsung service technician.

Supply usage

Caution

	Do not disassemble the toner cartridge. Toner dust can be dangerous if inhaled or ingested.
	Do not burn any of the supplies such as toner cartridge or fuser unit. This could cause an explosion or uncontrollable fire.

Safety information

	When storing supplies such as toner cartridges, keep them away from children. Toner dust can be dangerous if inhaled or ingested.
	For supplies that contain toner dust (toner cartridge, waste toner bottle, imaging unit, etc.) follow the instructions below. • When disposing of the supplies, follow the instructions for disposal. Refer to the reseller for disposal instructions. • Do not wash the supplies. • For a waste toner bottle, do not reuse it after emptying the bottle. If you do not follow the instructions above, it may cause machine malfunction and environmental pollution. The warranty does not cover damages caused by a user's carelessness.
	Using recycled supplies, such as toner, can cause damage to the machine. In case of damage due to the use of recycled supplies, a service fee will be charged.
	When toner gets on your clothing, do not use hot water to wash it. Hot water sets toner into fabric. Use cold water.
	When changing the toner cartridge or removing jammed paper, be careful not to let toner dust touch your body or clothes. Toner dust can be dangerous if inhaled or ingested.

Machine overview

Components

The actual component may differ from the illustration below. Some components may change depending on the configuration.

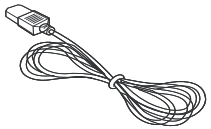	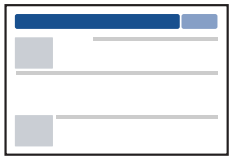
Power cord	Quick installation guide
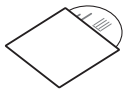	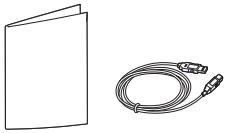
Software CD[a]	Misc. accessories[b]

a. The software CD contains the print drivers, user's guide, and software applications.
b. Miscellaneous accessories included with your machine may vary by country of purchase and specific model.

Machine overview

Front view

- This illustration may differ from your machine depending on your model. There are various types of machine.
- Some features and optional goods may not be available depending on model or country (see "Features by model" on page 7).

C48x/C48xW series

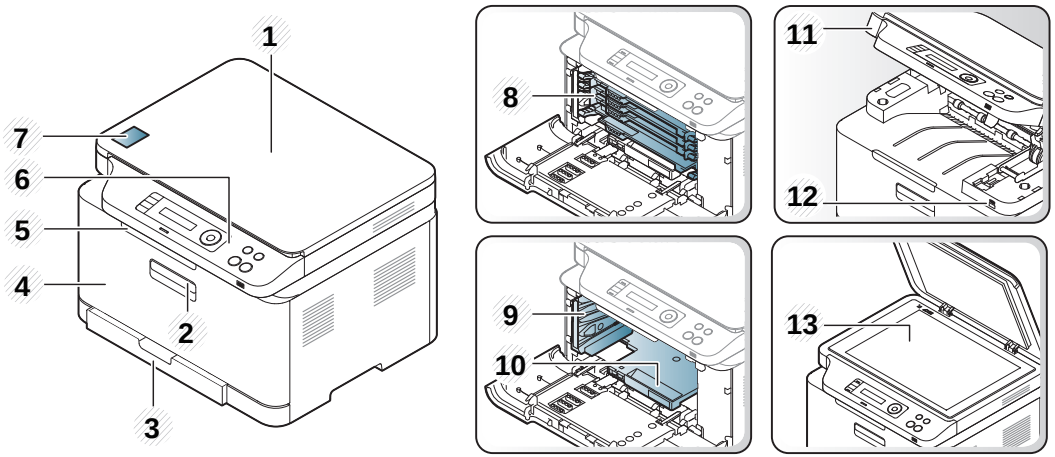

1	Scanner lid	8	Toner cartridges
2	Front handle	9	Waste toner container
3	Tray	10	Imaging unit
4	Front door	11	Scan unit[a b]
5	Output support	12	USB memory port[c]
6	Control panel	13	Scanner glass
7	NFC tag[c]		

a. Close the scanner lid before opening the scan unit.
b. Be careful not to pinch your fingers.
c. C48xW series only.

Machine overview

C48xFN/C48xFW series

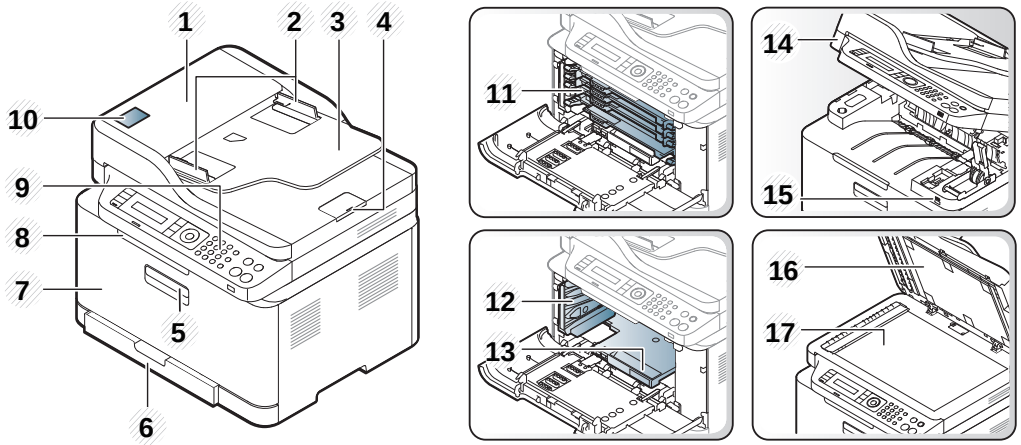

1	Document feeder cover	10	NFC tag[a]
2	Document feeder width guide	11	Toner cartridges
3	Document feeder input tray	12	Waste toner container
4	Document feeder output support	13	Imaging unit
5	Front handle	14	Scan unit[b c]
6	Tray	15	USB memory port
7	Front cover	16	Scanner lid
8	Output support	17	Scanner glass
9	Control panel		

a. C48xFW series only.
b. Close the scanner lid before opening the scan unit.
c. Be careful not to pinch your fingers.

Machine overview

Rear view

- This illustration may differ from your machine depending on your model. There are various types of machine.
- Some features and optional goods may not be available depending on model or country (see "Features by model" on page 7).

C48x/C48xW series

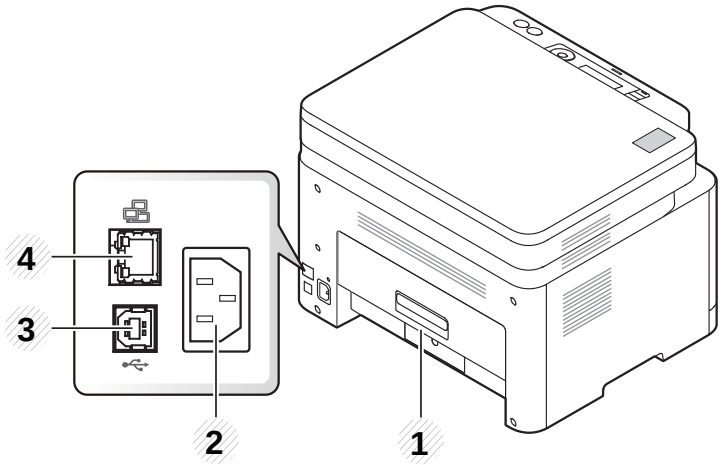

1	Rear cover	3	USB port
2	Power receptacle	4	Network port[a]

a. C48xW series only.

C48xFN/C48xFW series

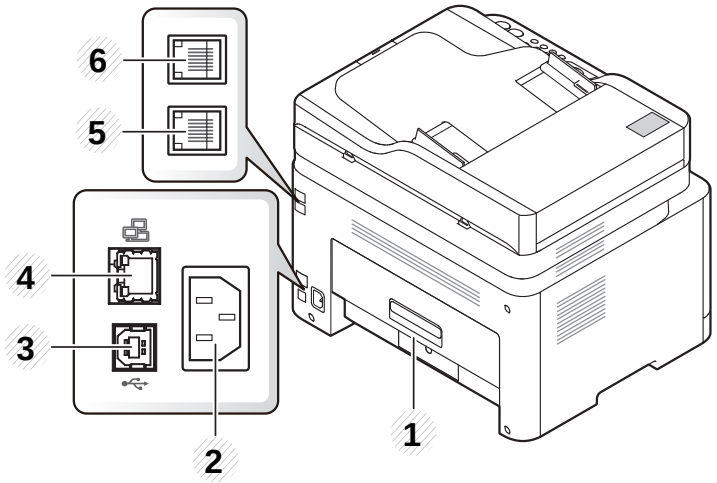

1	Rear cover	4	Network port
2	Power receptacle	5	Telephone line socket (**LINE**)
3	USB port	6	Extension telephone socket (**EXT.**)

Control panel overview

- This control panel may differ from your machine depending on its model. There are various types of control panels.
- Some features and optional goods may not be available depending on model or country (see "Features by model" on page 7).

C48x/C48xW series

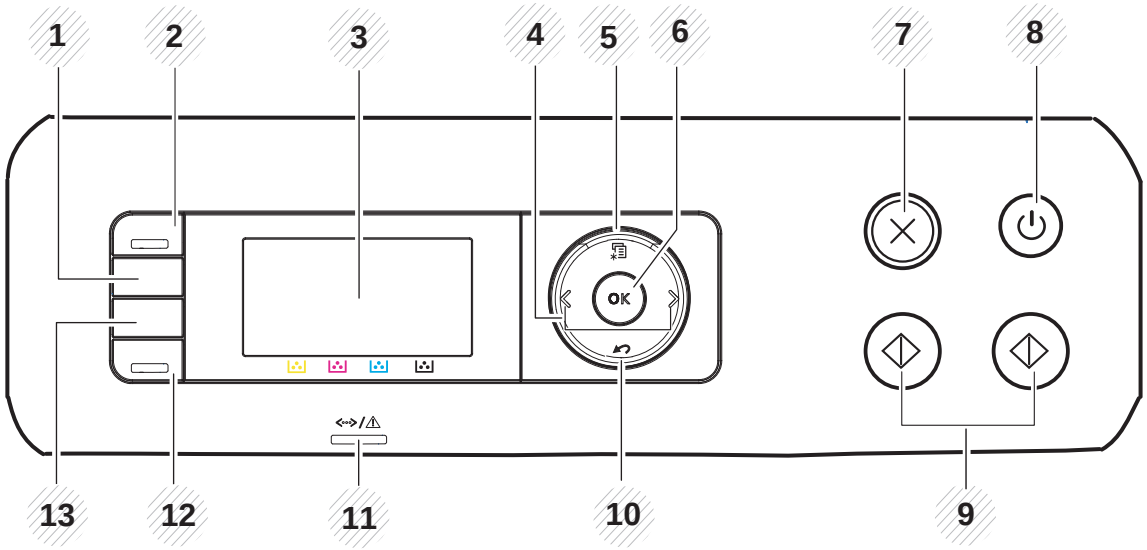

1	**WPS**[a]	Configures the wireless network connection easily without a computer (see "Using the WPS Settings menu" on page 156).
2	**Scan to**[a]	Switches between scan and copy mode. The **Scan to** LED turns on scan mode and turns off on copy mode.
3	**Display screen**	Shows the current status and displays prompts during an operation.
4	**Arrows**	Scrolls through the options available in the selected menu and increases or decreases values.

Control panel overview

5	**Menu**		Opens Menu mode and scrolls through the available menus (see "Menu overview" on page 33).
6	**OK**		Confirms the selection on the screen.
7	**Stop/Clear**		Stops an operations at any time.
8	**Power/Wake Up**		Turns the power on or off, or wakes up the machine from the power save mode. If you need to turn the machine off, press this button for more than three seconds when the machine is in ready mode.
9	**Start**		Starts a job.
10	**Back**		Sends you back to the upper menu level.
11	**Status LED**		Indicates the status of your machine (see "Understanding the status LED" on page 102).
12	**Eco**[a]		Turn into eco mode to reduce toner consumption and paper usage when pc-printing and copying only (see "Eco printing" on page 55).
13	**Direct USB**[a]		Allows you to directly print files stored on a USB memory device when it is inserted into the USB port on the front of your machine.

a. C48xW series only.

Control panel overview

C48xFN/C48xFW series

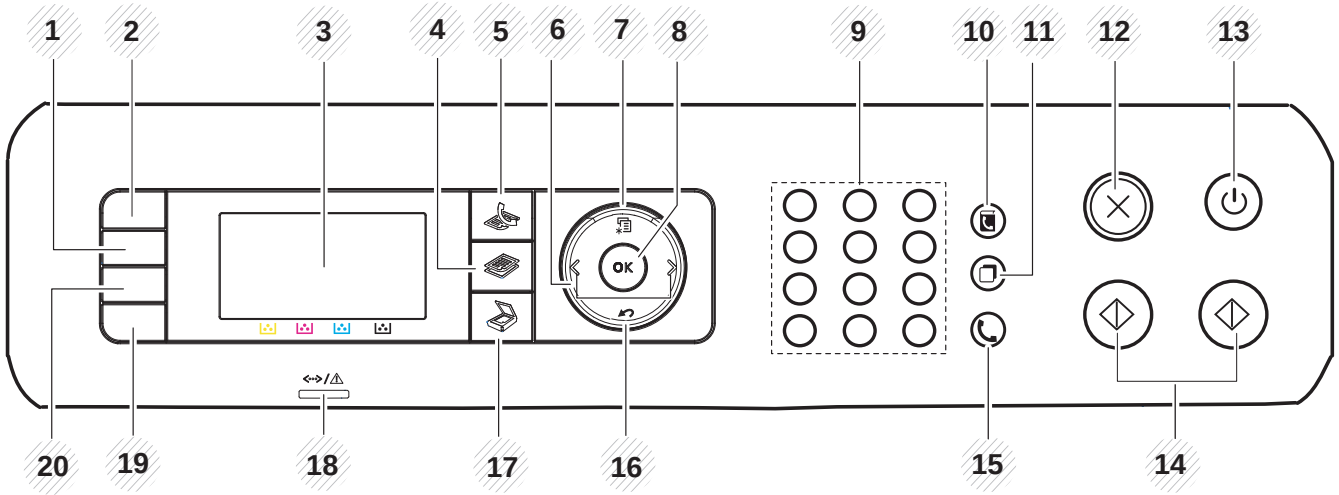

1	**WPS**[a]		Configures the wireless network connection easily without a computer (see "Using the WPS Settings menu" on page 156).
2	**ID Copy**		Allows you to copy both sides of an ID card like a driver's license on a single side of paper (see "ID card copying" on page 61).
3	**Display screen**		Shows the current status and displays prompts during an operation.
4	**Copy**		Switches to Copy mode.
5	**Fax**		Switches to Fax mode.
6	**Arrows**		Scrolls through the options available in the selected menu and increases or decreases values.
7	**Menu**		Opens Menu mode and scrolls through the available menus (see "Menu overview" on page 33).

Control panel overview

8	**OK**		Confirms the selection on the screen.
9	**Numeric keypad**		Dials a number or enters alphanumeric characters (see "Keypad letters and numbers" on page 209).
10	**Address Book**		Allows you to store frequently used fax numbers or search for stored fax numbers (see "Setting up the fax address book" on page 210).
11	**Redial/Pause**		Redials the recently sent fax number or received caller ID in ready mode, or inserts a pause(-) into a fax number in edit mode (see "Redialing the fax number" on page 232).
12	**Stop/Clear**		Stops an operations at any time.
13	**Power/Wake Up**		Turns the power on or off, or wakes up the machine from the power save mode. If you need to turn the machine off, press this button for more than three seconds when the machine is in ready mode.
14	**Start**		Starts a job.
15	**On Hook Dial**		When you press this button, you can hear a dial tone. Then enter a fax number. It is similar to making a call using speaker phone (see "Receiving manually in Tel mode" on page 238).
16	**Back**		Sends you back to the upper menu level.
17	**Scan**		Switches to Scan mode.
18	**Status LED**		Indicates the status of your machine (see "Understanding the status LED" on page 102).
19	**Eco**		Turn into eco mode to reduce toner consumption and paper usage when pc-printing and copying only (see "Eco printing" on page 55).
20	**Direct USB**		Allows you to directly print files stored on a USB memory device when it is inserted into the USB port on the front of your machine.

a. C48xFW series only.

Turning on the machine

Keep in mind that you should use the power cord supplied with the machine. Otherwise, it can cause damage or fire to the machine.

1 Connect the machine to the electricity supply first.

Turn the switch on if the machine has a power switch.

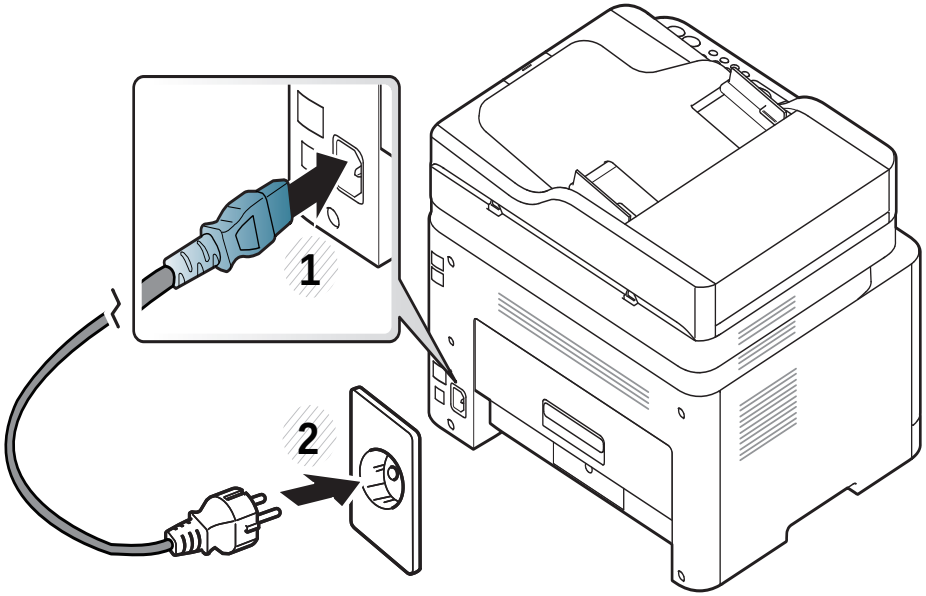

Illustrations on this user's guide may differ from your machine depending on its options or models. Check your machine type (see "Front view" on page 21).

2 Power is turned on automatically.

For C48x/C48xW series, press (**Power/Wake Up**) button on the control panel.

If you want to turn the power off, press and hold (**Power/Wake Up**) button for about 3 seconds.

Installing the driver locally

A locally connected machine is a machine directly attached to your computer using a USB cable. If your machine is attached to a network, skip the following steps below and go on to installing a network connected machine's driver (see "Installing driver over the network" on page 147).

- If you are a Mac or Linux operating systems user, refer to the "Installation for Mac" on page 138 or "Installation for Linux" on page 140.
- The installation window in this User's Guide may differ depending on the machine and interface in use.
- Only use a USB cable no longer than 3 meters (118 inches).

Windows

1 Make sure that the machine is connected to your computer and powered on.

2 Insert the supplied software CD into your CD-ROM drive.

If the installation window does not appear, click **Start** > **All programs** > **Accessories** > **Run**.

X:**Setup.exe** replacing "X" with the letter, which represents your CD-ROM drive and click **OK**.

- For Windows 8,

If the installation window does not appear, from **Charms**, select **Search** > **Apps** and search for **Run**. Type in X:\Setup.exe, replacing "X" with the letter that represents your CD-ROM drive and click **OK**.

If "**Tap to choose what happens with this disc**." pop-up window appears, click the window and select **Run Setup.exe**.

3 Review and accept the installation agreements in the installation window. Then, click **Next**.

4 Select **USB** on the **Printer Connection Type** screen. Then, click **Next**.

5 Follow the instructions in the installation window.

You can select the software applications in the **Select Software to Install** window.

Installing the driver locally

From the Windows 8 Start Screen

- The V4 driver is automatically downloaded from the Windows Update if your computer is connected to the Internet. If not, you can manually download the V4 driver from Samsung website, www.samsung.com > find your product > Support or downloads.
- You can download Samsung Printer Experience app from the **Windows Store**. You need have a Microsoft account to use the Windows **Store**.
  1. From **Charms**, select **Search**.
  2. Click **Store**.
  3. Search and click **Samsung Printer Experience**.
  4. Click **Install**.
- If you install the driver using the supplied software CD, V4 driver is not installed. If you want to use the V4 driver in the **Desktop** screen, you can download from the Samsung website, www.samsung.com >find your product > Support or downloads.
- If you want to install Samsung's printer management tools, you need to install them using the supplied software CD.

1. Make sure that your computer is connected to the Internet and powered on.
2. Make sure that the machine is powered on.
3. Connect the computer and the machine with a USB cable.

   The driver is automatically installed from the **Windows Update**.

Reinstalling the driver

If the printer driver does not work properly, follow the steps below to reinstall the driver.

Windows

1. Make sure that the machine is connected to your computer and powered on.
2. From the **Start** menu, select **Programs** or **All Programs** > **Samsung Printers** > **Uninstall Samsung Printer Software**.
   - For Windows 8,
     1. From Charms, select **Search** > **Apps**.
     2. Search and click **Control Panel**.
     3. Click **Programs and Features**.
     4. Right-click the driver you want to uninstall and select **Uninstall**.
3. Follow the instructions in the installation window.
4. Insert the software CD into your CD-ROM drive and install the driver again (see "Installing the driver locally" on page 29).

From the Windows 8 Start Screen

1. Make sure that the machine is connected to your computer and powered on.
2. Click on the **Uninstall Samsung Printer Software** tile in the **Start** screen.
3. Follow the instructions in the window.

- If you cannot find a Samsung Printer Software tile, unintstall from the desktop screen mode.
- If you want to uninstall Samsung's printer management tools, from the **Start** screen, right-click the app > **Uninstall** > right-click the program you want to delete > **Uninstall** and follow the instruction in the window.

2. Menu Overview and Basic Setup

This chapter provides information about the overall menu structure and the basic setup options.

- Menu overview 33
- Machine’s basic settings 37
- Media and tray 39
- Basic printing 52
- Basic copying 58
- Basic scanning 63
- Basic faxing 64
- Using USB memory device 68

Menu overview

The control panel provides access to various menus to set up the machine or use the machine's functions.

- An asterisk (*) appears next to the currently selected menu.
- Some menus may not appear on the display depending on options or models. If so, it is not applicable to your machine.
- Some menu names may differ from your machine depending on its options or the models.
- The menus are described in the Advanced Guide (see "Useful Setting Menus" on page 187).

Accessing the menu

1. Select the Copy, Fax, or Scan button on the control panel depending on the feature to be used.
2. Select (**Menu**) until the menu you want appears on the bottom line of the display and press **OK**.
3. Press the left/right arrows until the needed menu item appears and press **OK**.
4. If the setting item has sub menus, repeat step 3.
5. Press **OK** to save the selection.
6. Press (**Stop/Clear**) to return to the ready mode.

Menu overview

Copy Feature (see "Copy" on page 190)	Copy Setup (see "Copy" on page 190)	Fax Feature[a] (see "Fax" on page 193)		Fax Setup[a] (see "Fax" on page 193)	
Original Size	Change Default	Darkness	Rcv. Forward	Sending	Change Default
Reduce/Enlarge	Original Size	Light+5- Light+1	Forward to Fax	Redial Times	Darkness
Darkness	Copies	Normal	Forward to PC	Redial Term	Resolution
Normal	Reduce/Enlarge	Dark+1- Dark+5	Fwd. to Email	Prefix Dial	Original Size
Dark+1- Dark+5	Darkness	Resolution	Forward&Print	ECM Mode	Smart Fax Diag
Light+5- Light+1	Original Type	Standard	Secure Receive	Modem Speed	Auto Config.
Original Type	Collation	Fine	Off	Fax Confirm.	Start Now
Text		Super Fine	On	Image TCR	Initialize
Text/Photo		Photo Fax	Print	Dial Mode[b]	Manual TX/RX
Photo		Original Size	Add Page	Receiving	On
Magazine		Multi Send	Cancel Job	Receive Mode	Off
Collation		Delay Send		Ring to Answer	
On		Priority Send		Stamp Rcv Name	
Off		Send Forward		Rcv Start Code	
Layout		Forward to Fax		Auto Reduction	
Normal		Fwd. to Email		Discard Size	
2-Up				Junk Fax Setup	
4-Up				DRPD Mode[b]	
ID Copy					
Adjust Bkgd.					
Off					
Auto					
Enhance Lev.1					
Enhance Lev.2					
Erase Lev.1- Erase Lev.4					

a. C48xFN/C48xFW series only.
b. This option may not be available depending on your country.

Menu overview

Scan Feature[a] (see "Scan" on page 197)	Scan Setup[a] (see "Scan" on page 197)	Print Setup (see "Print" on page 189)	
USB Feature	Change Default	Orientation	Screen
Original Size	USB Default	Portrait	Normal
Original Type	Email Default[b]	Landscape	Enhanced
Resolution	Samsung Cloud[b]	Copies	Detailed
Color Mode		[1 - 999]	Auto CR
File Format		Resolution	LF
Darkness		Standard	LF+CR
Email Feature[b]		High Resol.	SkipBlankPages
Original Size		Clear Text	On
Original Type		Off	Off
Resolution		Minimum	Emulation
Color Mode		Medium	Emulation Type
Darkness		Maximum	Setup
Samsung Cloud[b]		Edge Enhance	
Original Size		Off	
Original Type		Normal	
Resolution		Maximum	
Color Mode		Trapping	
Darkness		Off	
		Normal	
		Maximum	

a. C48xW/C48xFN/C48xFW series only.
b. C48xFN/C48xFW series only.

Menu overview

System Setup (see "System setup" on page 199)				Network[a] (see "Network setup" on page 205)	
Machine Setup	**Paper Setup**	**Report**	**Maintenance**	**TCP/IP (IPv4)**	**Wi-Fi** [e]
Machine ID[b]	Paper Size	Configuration	CLR Empty Msg[d]	DHCP	Wi-Fi On/Off
Fax Number[b]	Paper Type	Demo Page	Supplies Life	BOOTP	Wi-Fi Settings
Date & Time[b]	Margin	Network Conf.	Image Mgr.	Static	WPS
Clock Mode[b]	**Sound/Volume**[b]	Supplies Info.	Custom Color	**TCP/IP (IPv6)**	Wi-Fi Direct
Language	Key Sound	Usage Counter	TonerLow Alert	IPv6 Protocol	Wi-Fi Signal
Default Mode[b]	Alarm Sound	Fax Received[b]	ImgU.Low Alert	DHCPv6 Config	Wi-Fi Default
Power Save	Speaker	Fax Sent[b]	Serial Number	**Ethernet**	**Protocol Mgr.**
Auto Power Off [c]	Ringer	Scheduled Jobs[b]		Ethernet Port	HTTP
Wakeup Event		Fax Confirm.[b]		Ethernet Speed	SCP
System Timeout		Email Sent[b]			WINS
Job Timeout		Junk Fax[b]			SNMPv1/v2
Altitude Adj.		PCL Font			UPnP(SSDP)
Humidity		PS Font			mDNS
Auto Continue		Address Book[b]			SetIP
Paper Substit.					SLP
Eco Settings					**Network Conf.**
					Clear Settings

a. C48xW/C48xFN/C48xFW series only.
b. C48xFN/C48xFW series only.
c. C48x/C48xW series only.
d. This option only appears when small amount of toner is left in the cartridge.
e. C48xW/C48xFW series only.

Machine’s basic settings

You change the machine’s setting set in the machine from Samsung Easy Printer Manager or SyncThru™ Web Service.

- If your machine is connected to the local, you can set the machine’s setting from **Samsung Easy Printer Manager** > **Advanced Setting** > **Device Settings** (see "Using Samsung Easy Printer Manager" on page 252).
- If your machine is connected to the network, you can set the machine’s setting from **SyncThru™ Web Service** > **Settings** tab > **Machine Settings** (see "Using SyncThru™ Web Service" on page 249).

After installation is complete, you may want to set the machine's default settings.

To change the machine’s default settings, follow these steps:

It may be necessary to press **OK** to navigate to lower-level menus for some models.

1 Select (**Menu**) button on the control panel.

2 Press **System Setup** > **Machine Setup**.

3 Select the option you want, then press **OK**.

- **Language:** change the language that is displayed on the control panel.
- **Date & Time:** When you set the time and date, they are used in delay fax and delay print. They are printed on reports. If, however, they are not correct, you need to change it for the correct time being.

Enter the correct time and date using arrows or numeric keypad (see "Keypad letters and numbers" on page 209).

- Month = 01 to 12
- Day = 01 to 31
- Year = requires four digits
- Hour = 01 to 12
- Minute = 00 to 59

- **Clock Mode:** You can set your machine to display the current time using either a 12-hour or 24-hour format.
- **Power Save:** When you are not using the machine for a while, use this feature to save power.

Machine’s basic settings

- When you press the **Power/Wake Up** button, start printing, or a fax is received, the product will wake up from the power saving mode.
- Press (**Menu**) > **System Setup** > **Machine Setup** > **Wakeup Event** > **On** on the control panel. When you press any button except **Power/Wake Up** button, the machine wake up from the power save mode.

- **Altitude Adj.:** Print quality is affected by atmospheric pressure, which atmospheric pressure is determined by the height of the machine above sea level. Before you set the altitude value, determine the altitude where you are (see "Altitude adjustment" on page 208).

4 Select the option you want, then press **OK**.

5 Press **OK** to save the selection.

6 Press (**Stop/Clear**) to return to ready mode.

Refer to below links to set other settings useful for using the machine.

- See "Entering various characters" on page 209.
- See "Keypad letters and numbers" on page 209.
- See "Setting the paper size and type" on page 46.
- See "Setting up the fax address book" on page 210.

Media and tray

This chapter provides information on how to load print media into your machine.

- Using print media that does not meet these specifications may cause problems or require repairs. Such repairs are not covered by Samsung's warranty or service agreements.
- Make sure not to use the inkjet photo paper with this machine. It could cause damage to the machine.
- Using inflammable print media can cause a fire.
- Use designated print media (see "Print media specifications" on page 113).

The use of inflammable media or foreign materials left in the printer may lead to overheating of the unit and, in rare cases may cause a fire.

Tray overview

To change the size, you need to adjust the paper guides.

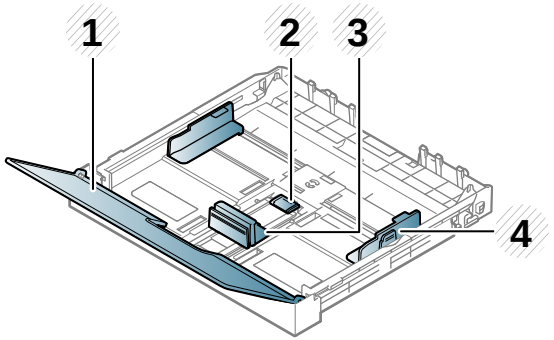

1 Paper cover
2 Guide lock
3 Paper length guide
4 Paper width guide

If you do not adjust the guide, it may cause paper registration, image skew, or jamming of the paper.

Media and tray

Loading paper in the tray

Illustrations on this user's guide may differ from your machine depending on its options or models. Check your machine type (see "Front view" on page 21).

1 Pull out the paper tray (see "Tray overview" on page 39).

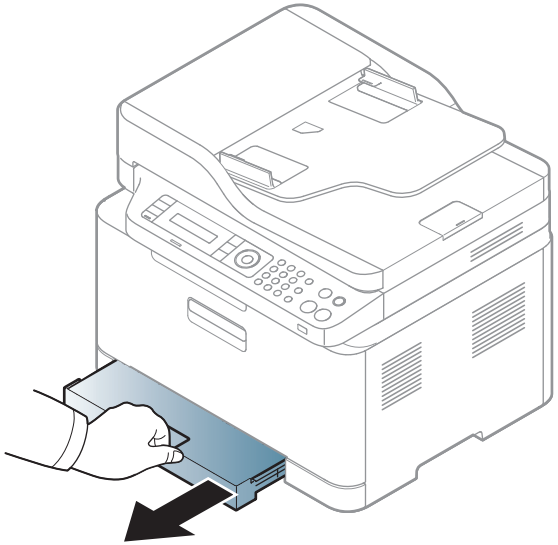

2 Open the paper cover.

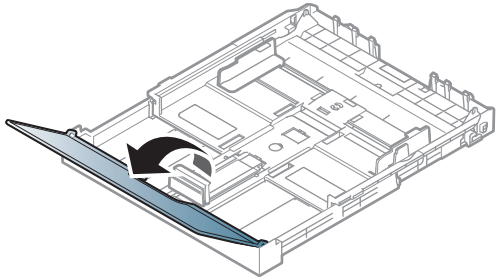

3 Press and unlatch the guide lock in the tray, pull the tray out manually. Then adjust the paper length guide and paper width guide.

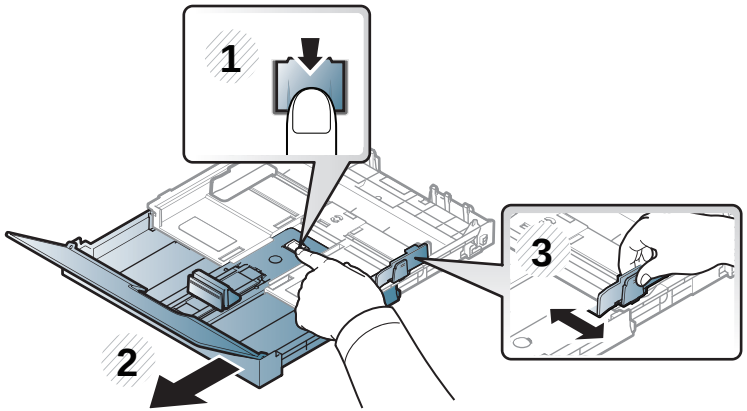

4 Flex or fan the edge of the paper stack to separate the pages before loading papers.

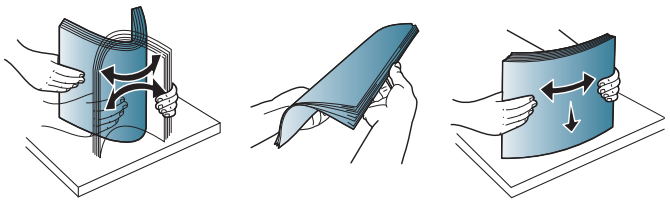

Media and tray

5 Place the paper with the side you want to print facing up.

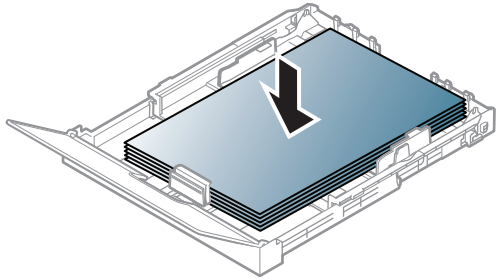

For paper smaller than A4-sized, press and unlatch the guide lock in the tray, push the tray in manually. Then adjust the paper length guide and paper width guide.

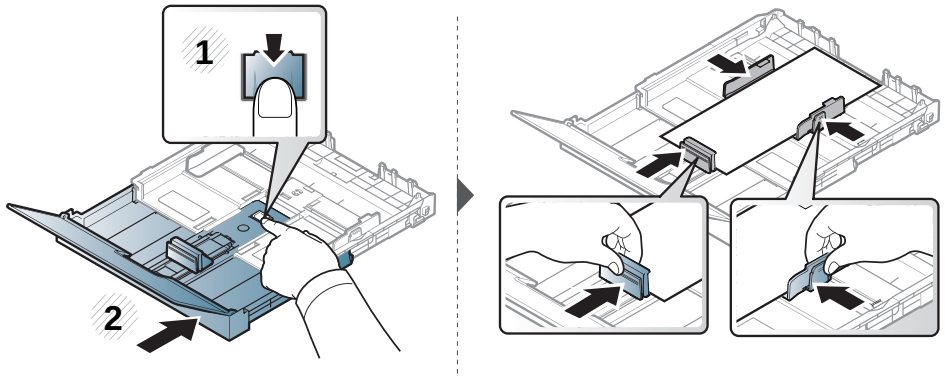

For paper longer than Legal-sized, press and unlatch the guide lock in the tray, pull the tray out manually. Then adjust the paper length guide and paper width guide.

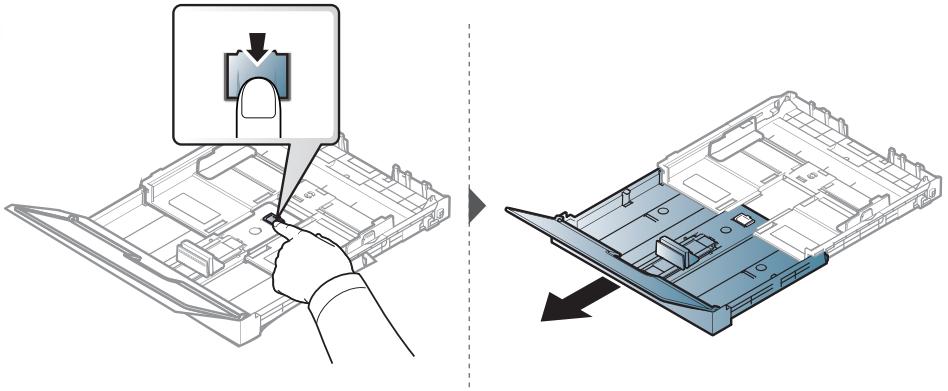

- Do not push the paper width guide too far causing the media to buckle.
- Do not use a paper with a leading-edge curl, it may cause a paper jam or the paper can be wrinkled.

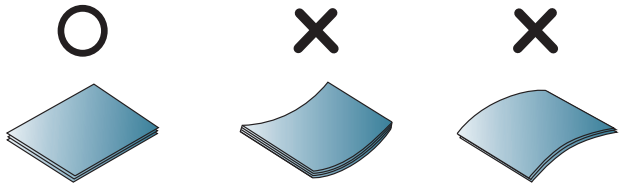

- If you do not adjust the paper width guide, it may cause paper jams.

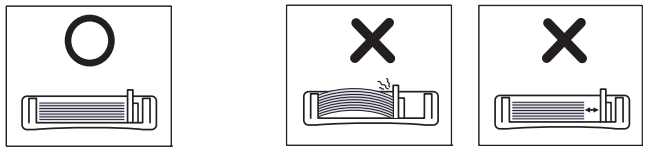

6 Squeeze the paper width guide and slide it to the edge of the paper stack without causing it to buckle.

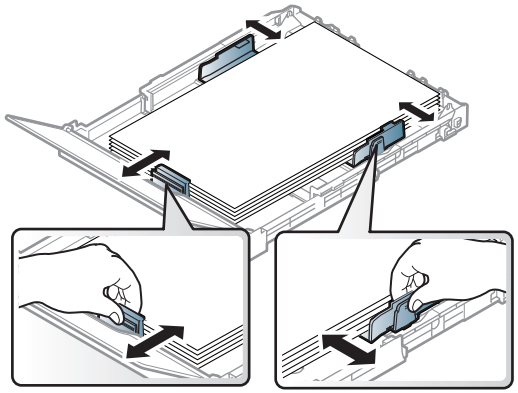

7 Close the paper cover.

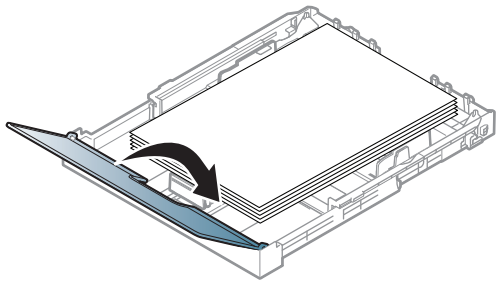

8 Insert the paper tray.

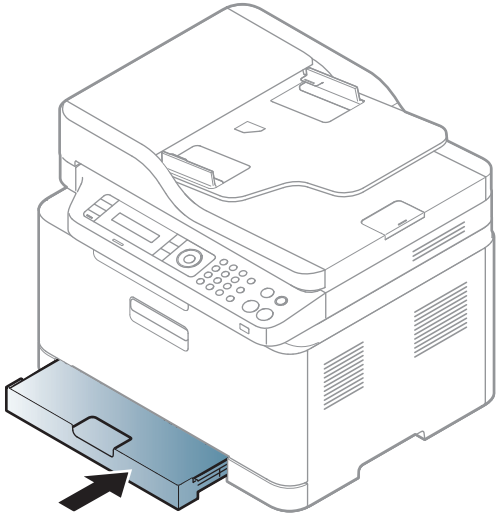

9 When you print a document, set the paper type and size for the tray (see "Setting the paper size and type" on page 46).

The tray is preset to Letter or A4 size, depending on your country. To change the size to A4 or Letter, you must adjust the lever and paper width guide properly.

Media and tray

1 Pull the tray out of the machine. Open the paper cover and remove paper from the tray if necessary.

2 If you want to change the size to Letter, hold the lever at the back of the tray, and rotate the lever clockwise.

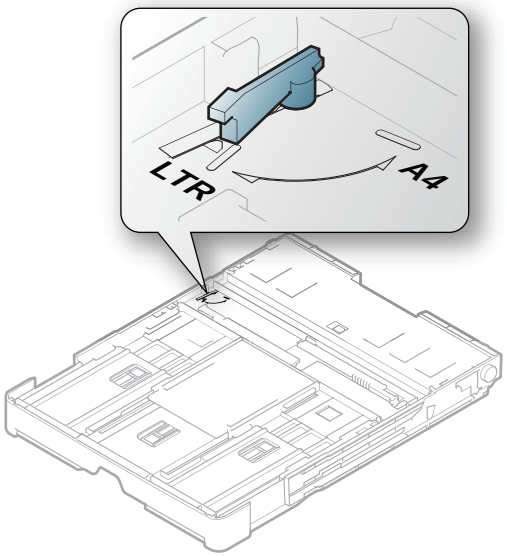

3 Squeeze the paper width guide and slide it to the edge of the lever.

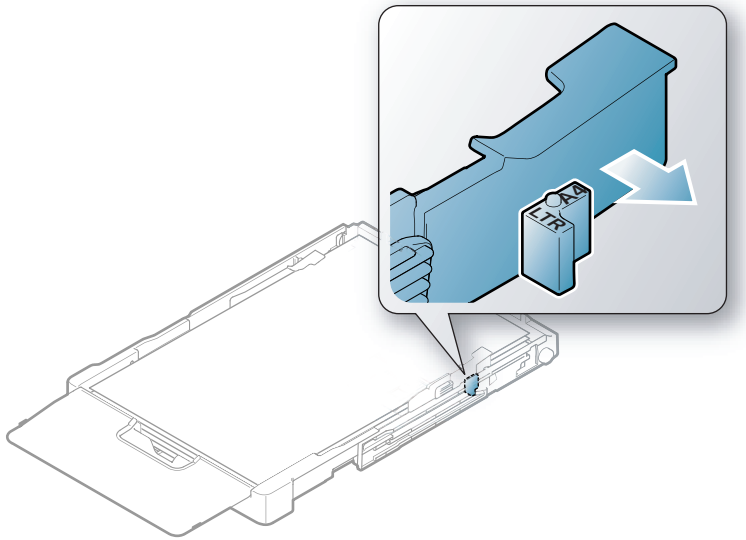

If you want to change the size to A4, first move the paper width guide to left and rotate the lever counterclockwise. If you force the lever, it could damage the tray.

Media and tray

Printing on special media

- When using special media, we recommend you feed one sheet at a time (see "Print media specifications" on page 113).

The table below shows the special media usable in tray.

The paper setting in the machine and driver should match to print without a paper mismatch error.

The paper setting in the machine and driver should match to print without a paper mismatch error.

- You change the paper setting set in the machine from Samsung Easy Printer Manager program or SyncThru™ Web Service.
  - If your machine is connected to the local, you can set the machine's setting from **Samsung Easy Printer Manager** > **Advanced Setting** > **Device Settings** (see "Using Samsung Easy Printer Manager" on page 252).
  - If your machine is connected to the network, you can set the machine's setting from **SyncThru™ Web Service** > **Settings** tab > **Machine Settings** (see "Using SyncThru™ Web Service" on page 249).
- You can set it using **System Setup** > **Paper Setup** > select you want > **Paper Size** or **Paper Type** button on the control panel.

To see paper weights for each sheet, refer to "Print media specifications" on page 113.

Types	Tray[a]
Plain	●
Thick	●
Thin	●
Bond	●
Color	●
CardStock	●
Labels	●
Preprinted	●
Cotton	●
Recycled	●
Archive	●
Glossy Photo	●
Matte Photo	●

a. The paper types available manual feeding in tray.

(●: Supported)

Media and tray

Labels

To avoid damaging the machine, use only labels designed for use in laser printers.

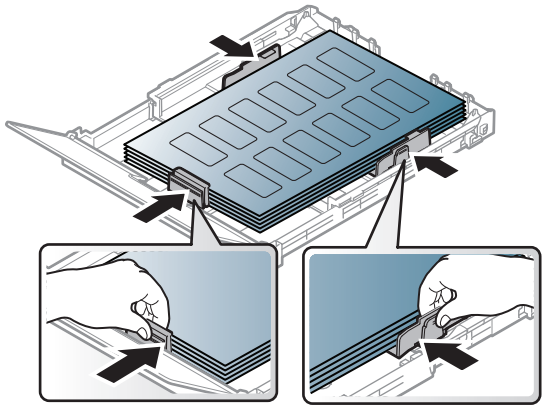

- When selecting labels, consider the following factors:
  - **Adhesives:** Should be stable at your machine's fusing temperature about 170°C (338°F).
  - **Arrangement:** Only use labels with no exposed backing between them. Labels can peel off sheets that have spaces between the labels, causing serious jams.
  - **Curl:** Must lie flat with no more than 13 mm of curl in any direction.
  - **Condition:** Do not use labels with wrinkles, bubbles, or other indications of separation.
- Make sure that there is no exposed adhesive material between labels. Exposed areas can cause labels to peel off during printing, which can cause paper jams. Exposed adhesive can also cause damage to machine components.
- Do not run a sheet of labels through the machine more than once. The adhesive backing is designed for only a single pass through the machine.
- Do not use labels that are separating from the backing sheet or are wrinkled, bubbled, or otherwise damaged.

Card stock/ Custom-sized paper

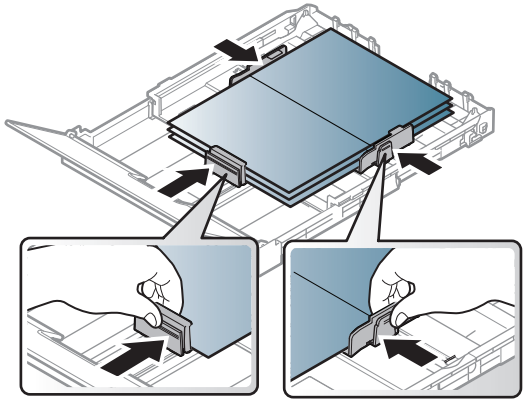

- In the software application, set the margins to at least 6.4 mm (0.25 inches) away from the edges of the material.

Media and tray

Preprinted paper

When loading preprinted paper, the printed side should be facing up with an uncurled edge at the front. If you experience problems with paper feeding, turn the paper around. Note that print quality is not guaranteed.

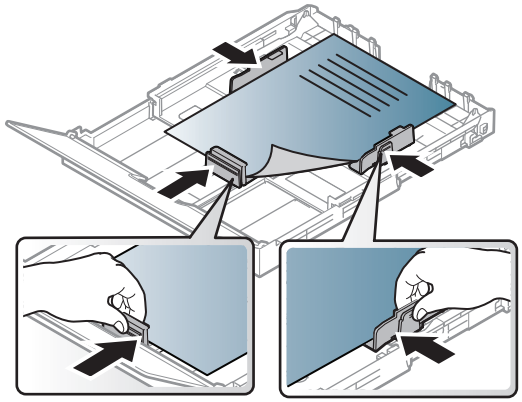

- Must be printed with heat-resistant ink that will not melt, vaporize, or release hazardous emissions when subjected to the machine's fusing temperature for 0.1 second (about 170°C (338°F)).
- Preprinted paper ink must be non-flammable and should not adversely affect machine rollers.
- Before you load preprinted paper, verify that the ink on the paper is dry. During the fusing process, wet ink can come off preprinted paper, reducing print quality.

Setting the paper size and type

After loading paper in the paper tray, set the paper size and type using the control panel buttons.

The paper setting in the machine and driver should match to print without a paper mismatch error.

- You change the paper setting set in the machine from Samsung Easy Printer Manager program or SyncThru™ Web Service.
  - If your machine is connected to the local, you can set the machine's setting from **Samsung Easy Printer Manager** > **Advanced Setting** > **Device Settings** (see "Using Samsung Easy Printer Manager" on page 252).
  - If your machine is connected to the network, you can set the machine's setting from **SyncThru™ Web Service** > **Settings** tab > **Machine Settings** (see "Using SyncThru™ Web Service" on page 249).
- You can set it using **System Setup** > **Paper Setup** > select you want > **Paper Size** or **Paper Type** button on the control panel.

1. Select (**Menu**) button on the control panel.
2. Press **System Setup** > **Paper Setup** > **Paper Size** or **Paper Type**.
3. Select the tray and the option you want.
4. Press **OK** to save the selection.

5 Press (**Stop/Clear**) to return to ready mode.

- If you want to use special-sized paper such as billing paper, select the **Paper** tab > **Size** > **Edit...** and set **Custom Paper Size Settings** in the **Printing Preferences** (see "Opening printing preferences" on page 54).

Using the output support

The surface of the output tray may become hot if you print a large number of pages at once. Make sure that you do not touch the surface, and do not allow children near it.

The printed pages stack on the output support, and the output support will help the printed pages to align. The printer sends output to the output tray by default.

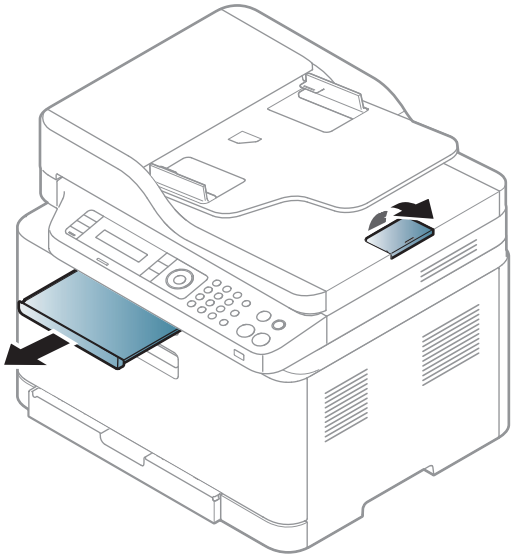

Media and tray

Illustrations on this user's guide may differ from your machine depending on its options or models. Check your machine type (see "Front view" on page 21).

Preparing originals

- Do not load paper smaller than 142 x 148 mm (5.6 x 5.8 inches) or larger than 216 x 356 mm (8.5 x 14 inches).
- Do not attempt to load the following s of paper, in order to prevent paper jam, low print quality and machine damage.
  - Carbon-paper or carbon-backed paper
  - Coated paper
  - Onion skin or thin paper
  - Wrinkled or creased paper
  - Curled or rolled paper
  - Torn paper
- Remove all staples and paper clips before loading.
- Make sure any glue, ink, or correction fluid on the paper is completely dry before loading.
- Do not load originals that include different sizes or weights of paper.
- Do not load booklets, pamphlets, transparencies, or documents with other unusual characteristics.

Loading originals

You can use the scanner glass or the document feeder to load an original for copying, scanning, and sending a fax.

Illustrations on this user's guide may differ from your machine depending on its options or models. Check your machine type (see "Front view" on page 21).

On the scanner glass

Using the scanner glass, you can copy or scan originals. You can get the best scan quality, especially for colored or gray-scaled images. Make sure that no originals are in the document feeder. If an original is detected in the document feeder, the machine gives it priority over the original on the scanner glass.

Media and tray

1 Lift and open the scanner lid.

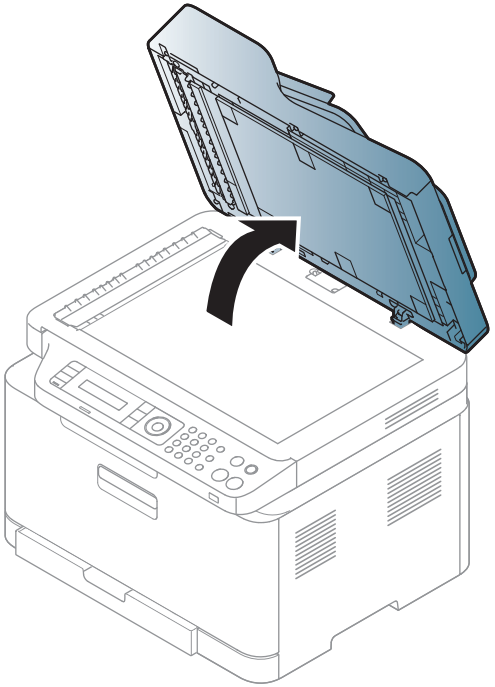

2 Place the original face down on the scanner glass. Align it with the registration guide at the top left corner of the glass.

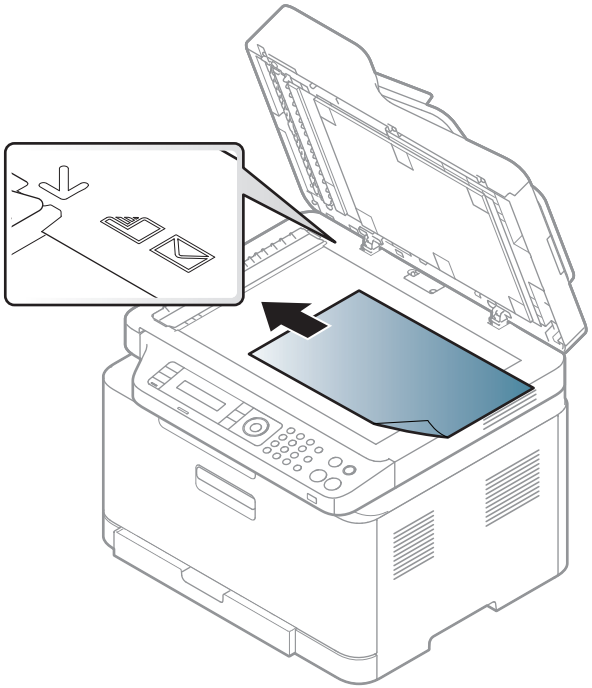

3 Close the scanner lid.

Media and tray

- Leaving the scanner lid open while copying may affect copy quality and toner consumption.
- Dust on the scanner glass may cause black spots on the printout. Always keep it clean (see "Cleaning the machine" on page 88).
- If you are copying a page from a book or magazine, lift the scanner lid until its hinges are caught by the stopper and then close the lid. If the book or magazine is thicker than 30 mm, start copying with the scanner lid open.

- Be careful not to break the scanner glass. You may get hurt.
- Do not put hands while closing the scanner lid. The scanner lid may fall on your hands and get hurt.
- Do not look into the light from inside of the scanner while copying or scanning. It is harmful to eyes.

In the document feeder

1 Flex or fan the edge of the paper stack to separate the pages before loading originals.

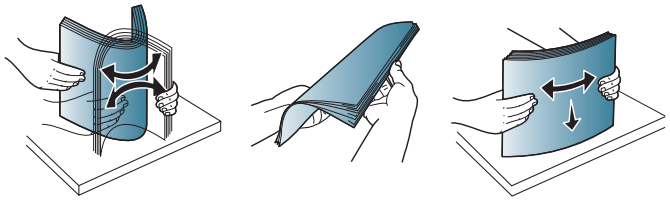
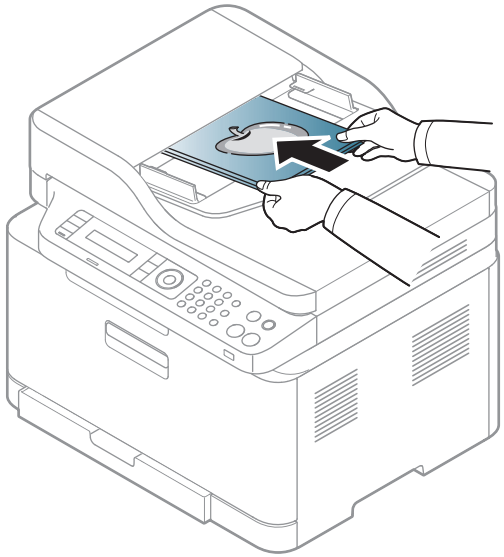
2 Load the original face up into the document feeder input tray. Make sure that the bottom of the original stack matches the paper size marked on the document input tray.