3 Adjust the document feeder width guides to the paper size.

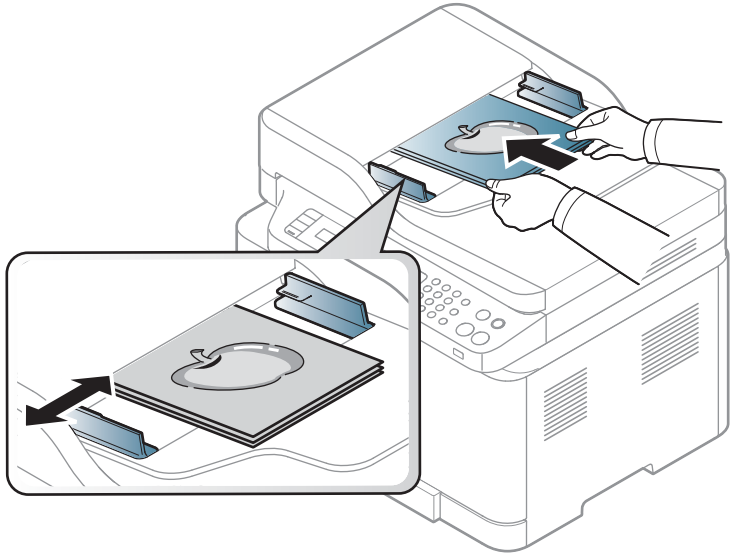

Dust on the document feeder glass may cause black lines on the printout. Always keep the glass clean (see "Cleaning the machine" on page 88).

Basic printing

For special printing features, refer to the Advanced Guide (see "Using advanced print features" on page 214).

Printing

- Mac printing (see "Mac printing" on page 221).
- Linux printing (see "Linux printing" on page 223).

The following **Printing Preferences** window is for Notepad in Windows 7.Your **Printing Preferences** window may differ, depending on your operating system or the application you are using.

1 Open the document you want to print.

2 Select **Print** from the **File** menu.

3 Select your machine from the **Select Printer** list.

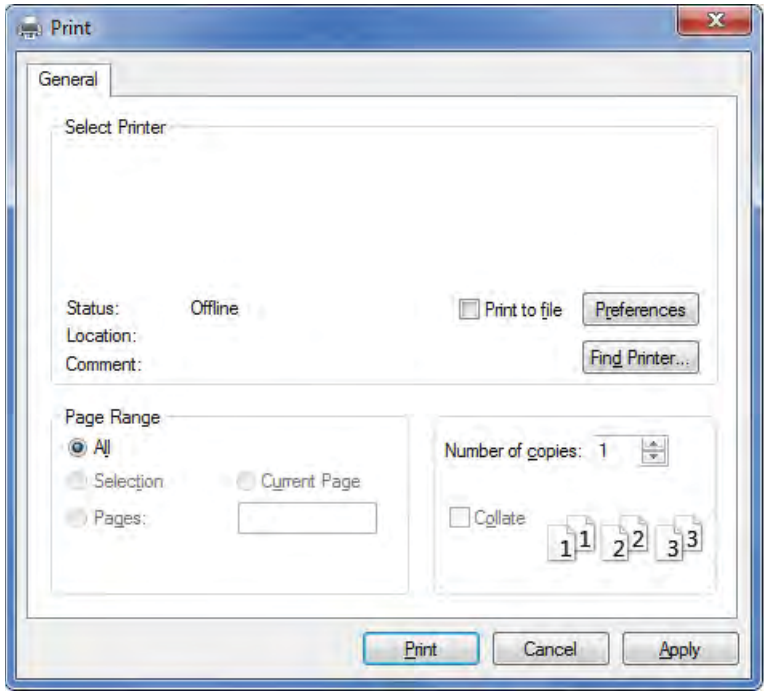

4 The basic print settings including the number of copies and print range are selected within the **Print** window.

To take advantage of the advanced printing features, click **Properties** or **Preferences** from the **Print** window (see "Opening printing preferences" on page 54).

5 To start the print job, click **OK** or **Print** in the **Print** window.

Basic printing

Canceling a print job

If the print job is waiting in the print queue or print spooler, cancel the job as follows:

- You can access this window by simply double-clicking the machine icon ( ) in the Windows task bar.
- You can also cancel the current job by pressing (**Stop/Clear**) on the control panel.

Basic printing

Opening printing preferences

- The **Printing Preferences** window that appears in this user's guide may differ depending on the machine in use.
- When you select an option in **Printing Preferences**, you may see a warning mark or . An mark means you can select that certain option but it is not recommended, and an mark means you cannot select that option due to the machine's setting or environment.
- For Windows 8 user, see "Opening more settings" on page 260.

1 Open the document you want to print.

2 Select **Print** from the file menu. The **Print** window appears.

3 Select your machine from the **Select Printer**.

4 Click **Properties** or **Preferences**.

The screenshot may differ depending on model.

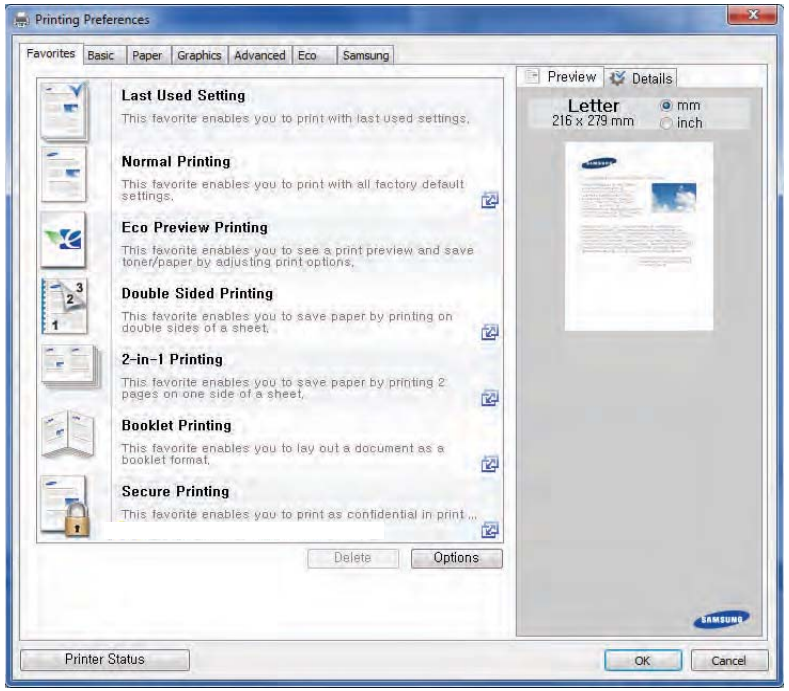

- You can apply **Eco** features to save paper and toner before printing (see "Easy Eco Driver" on page 245).
- You can check the machine's current status pressing the **Printer Status** button (see "Using Samsung Printer Status" on page 255).
- The printer driver includes a user interface that is optimized for touchscreens. To use this UI, click **Samsung Printer Center** > **Device Options** and then select **Stylish User Interface** (see "Using Samsung Printer Center" on page 246).

Basic printing

Using a favorite setting

The **Favorites** option, which is visible on each preferences tab except for the **Samsung** tab, allows you to save the current preferences for future use.

To save a **Favorites** item, follow these steps:

1 Change the settings as needed on each tab.

2 Enter a name for the item in the **Favorites** input box.

3 Click **Save**.

4 Enter name and description, and then select the desired icon.

5 Click **OK**. When you save **Favorites**, all current driver settings are saved.

To use a saved setting, select it in the **Favorites** tab. The machine is now set to print according to the settings you have selected. To delete saved settings, select it in the **Favorites** tab and click **Delete**.

Using help

Click the option you want to know on the **Printing Preferences** window and press **F1** on your keyboard.

Eco printing

The **Eco** function cuts toner consumption and paper usage. The **Eco** function allows you to save print resources and lead you to eco-friendly printing.

If you press the **Eco** button from the control panel, eco mode is enabled. The default setting of Eco mode is **Multiple Pages per Side** (2) and **Toner Save**. Some features may not be available depending on the model.

- You change the machine's setting set in the machine from Samsung Easy Printer Manager or SyncThru™ Web Service.
  - If your machine is connected to the local, you can set the machine's setting from **Samsung Easy Printer Manager** > **Advanced Setting** > **Device Settings** (see "Using Samsung Easy Printer Manager" on page 252).
  - If your machine is connected to the network, you can set the machine's setting from **SyncThru™ Web Service** > **Settings** tab > **Machine Settings** (see "Using SyncThru™ Web Service" on page 249).

Depending on the printer driver you use, Skip blank pages may not work properly. If Skip blank pages feature does not work properly, set the feature from the Easy Eco Driver (see "Easy Eco Driver" on page 245).

Setting Eco mode on the control panel

1 Select (**Menu**) > **System Setup** > **Machine Setup** > **Eco Settings** on the control panel.

2 Select the option you want and press **OK**.

- **Default Mode:** Select this to turn on or off the eco mode.
  - **Off**: Set the eco mode off.
  - **On**: Set the eco mode on.

If you set the eco mode on with a password from the SyncThru™ Web Service (**Settings** tab > **Machine Settings** > **System** > **Eco Settings**) or Samsung Easy Printer Manager (**Device Settings** > **Eco**), the **On force** message appears. You have to enter the password to change the eco mode status.

- **Select Temp.:** Follow the settings from Syncthru™ Web Service or Samsung Easy Printer Manager. Before you select this item, you must set the eco function in SyncThru™ Web Service (**Settings** tab > **Machine Settings** > **System** > **Eco Settings**) or Samsung Easy Printer Manager (**Device Settings** > **Eco**).
  - **Default Eco**: The machine is set to **Default Eco** mode.
  - **Custom Eco**: Change any necessary values.

3 Press **OK** to save the selection.

Setting eco mode on the driver

Open the Eco tab to set Eco mode. When you see the eco image ( ), that means the eco mode is currently enabled.

Eco options

- **Printer Default:** Follows the settings from the machine's control panel.
- **None:** Disables Eco mode.

- **Eco Printing:** Enables eco mode. Activate the various Eco items you want to use.
- **Password:** If the administrator fixed to enable the Eco mode, you have to enter the password to change the status.

Result simulator

Result Simulator shows the estimated results of reduced emissions of carbon dioxide, used electricity, and the amount of saved paper in accordance with the settings you selected.

- The results are calculated on the basis that the total number of printed paper is one hundred without a blank page when the Eco mode is disabled.
- Refers to the calculation coefficient about CO2, energy, and paper from **IEA**, the index of Ministry of Internal Affairs and Communication of Japan and www.remanufacturing.org.uk. Each model has a different index.
- The power consumption in printing mode refers to the average printing power consumption of this machine.
- The actual amount displayed is only an estimate as the actual amount may differ depending on the operating system used, computing performance, application software, connection method, media type [thickness], media size, job complexity, etc.

Basic copying

For special printing features, refer to the Advanced Guide (see "Copy" on page 190).

Basic copy

1 C48xW series: Make sure that the **Scan to** button's LED is off.

C48xFN/C48xFW series: Select (copy) on the control panel.

2 Select (**Menu**) > **Copy Feature** on the control panel.

3 Place a single document face down on the document glass, or load the documents face up into the document feeder (see "Loading originals" on page 48).

4 If you want to customize the copy settings including **Reduce/Enlarge**, **Darkness**, **Original Type** and more by using the control panel buttons (see "Changing the settings for each copy" on page 58).

5 Enter the number of copies using the arrow or number keypad, if necessary.

6 Press (**Start**).

If you need to cancel the copying job during the operation, press (**Stop/Clear**) and the copying will stop.

Changing the settings for each copy

Your machine provides default settings for copying so that you can quickly and easily make a copy.

- If you press the (**Stop/Clear**) button twice while setting the copy options, all of the options you have set for the current copy job will be canceled and returned to their default status. Or, they will automatically return to their default status after the machine completes the copy in progress.
- Accessing menus may differ from model to model (see "Accessing the menu" on page 33).
- It may be necessary to press **OK** to navigate to lower-level menus for some models.

Basic copying

Darkness

If you have an original containing faint marking and dark images, you can adjust the brightness to make a copy that is easier to read.

1 C48xW series: Make sure that the **Scan to** button's LED is off.

C48xFN/C48xFW series: Select (copy) on the control panel.

2 Select (**Menu**) > **Copy Feature** > **Darkness** on the control panel.

3 Select the option you want and press **OK**.

For example, the **Light+5** being the lightest, and the **Dark+5** being the darkest.

4 Press (**Stop/Clear**) to return to ready mode.

Original

The original setting is used to improve the copy quality by selecting the document for the current copy job.

1 C48xW series: Make sure that the **Scan to** button's LED is off.

C48xFN/C48xFW series: Select (copy) on the control panel.

2 Select (**Menu**) > **Copy Feature** > **Original Type** on the control panel.

3 Select the option you want and press **OK**.

- **Text**: Use for originals containing mostly text.
- **Text/Photo**: Use for originals with mixed text and photographs.

If texts in the printout is blurry, select **Text** to get the clear texts.

- **Photo**: Use when the originals are photographs.
- **Magazine**: Use when the originals are magazine.

4 Press (**Stop/Clear**) to return to ready mode.

Reduced or enlarged copy

You can reduce or enlarge the size of a copied image from 25% to 400% from the document feeder or scanner glass.

- This feature may not be available depending on model or optional goods (see "Variety feature" on page 10).
- If the machine set to Eco mode, reduce and enlarge features are not available.

Basic copying

To select from the predefined copy sizes

1. C48xW series: Make sure that the **Scan to** button's LED is off.

   C48xFN/C48xFW series: Select (copy) on the control panel.

2. Select (**Menu**) > **Copy Feature** > **Reduce/Enlarge** on the control panel.

3. Select the option you want and press **OK**.

4. Press (**Stop/Clear**) to return to ready mode.

> When you make a reduced copy, black lines may appear at the bottom of your copy.

To scale the copy by directly entering the scale rate

1. C48xW series: Make sure that the **Scan to** button's LED is off.

   C48xFN/C48xFW series: Select (copy) on the control panel.

2. Select (**Menu**) > **Copy Feature** > **Reduce/Enlarge** > **Custom** on the control panel.

3. Enter the copy size you want using the numeric keypad.

4. Press **OK** to save the selection.

5. Press (**Stop/Clear**) to return to ready mode.

Basic copying

ID card copying

Your machine can print 2-sided originals on one sheet.

The machine prints one side of the original on the upper half of the paper and the other side on the lower half without reducing the size of the original. This feature is helpful for copying a small-sized item such as business card.

- The original must be placed on the scanner glass to use this feature.
- If the machine set to Eco mode, this feature is not available.

Depending on the model, the operating procedure may differ.

1 Press **ID Copy** on the control panel.

2 Place the front side of an original facing down on the scanner glass where arrows indicate as shown. Then, close the scanner lid.

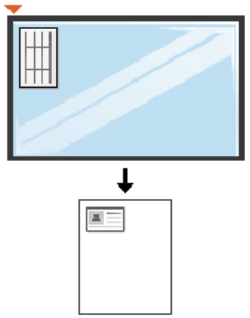

3 **Place Front Side and Press [Start]** appears on the display.

4 Press (**Start**).

Your machine begins scanning the front side and shows **Place Back Side and Press [Start]**.

5 Turn the original over and place it on the scanner glass where arrows indicate as shown. Then, close the scanner lid.

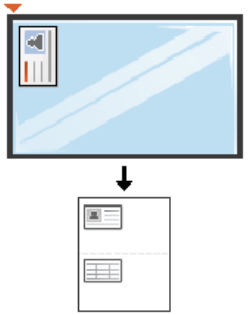

6 Press (**Start**) button.

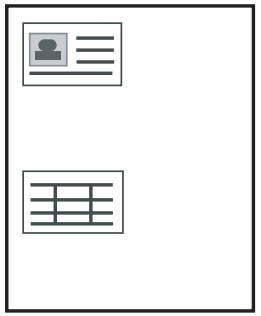

Basic copying

- If you do not press the (**Start**) button, only the front side will be copied.
- If the original is larger than the printable area, some portions may not be printed.

Basic scanning

For special scanning features, refer to the Advanced Guide (see "Scan features" on page 225).

Basic Scanning

This is the normal and usual procedure for scanning originals.

This is a basic scanning method for USB-connected machine.

- It may be necessary to press **OK** to navigate to lower-level menus for some models.
- If you want to scan using the network, refer to the Advanced Guide (see "Scanning from network connected machine" on page 226).
- C48xW series only support **Scan to** key on the control panel (see "Basic scanning method" on page 225).

1 Place a single document face down on the document glass, or load the documents face up into the document feeder (see "Loading originals" on page 48).

2 C48xW series: Press **Scan to** > **Scan to PC** > **Local PC** on the control panel.

C48xFN/C48xFW series: Select (scan) > **Scan to PC** > **Local PC** on the control panel.

If you see **Not Available** message, check the port connection, or select **Enable Scan from Device Panel** in **Samsung Easy Printer Manager** > **Advanced Setting** > **Scan to PC Settings**.

3 Select the scan destination you want and press **OK**.

Default setting is **My Documents**.

- You can create and save the frequently used settings as a profile list. Also you can add and delete the profile and save each profile to a different path.
- To change the **Samsung Easy Printer Manager** > **Advanced Setting** > **Scan to PC Settings**.

4 Select the option you want and press **OK**.

5 Scanning begins.

Scanned image is saved in computer's **C:\Users\users name\My Documents**. The saved folder may differ, depending on your operating system or the application you are using.

Basic faxing

- C48xFN/C48xFW series only.
- For special faxing features, refer to the Advanced Guide (see "Fax features" on page 232).

- You cannot use this machine as a fax via the internet phone. For more information ask your internet service provider.
- We recommend using traditional analog phone services (PSTN: Public Switched Telephone Network) when connecting telephone lines to use a fax machine. If you use other Internet services (DSL, ISDN, VoIP), you can improve the connection quality by using the Micro-filter. The Micro-filter eliminates unnecessary noise signals and improves connection quality or Internet quality. Since the DSL Micro-filter is not provided with the machine, contact your Internet service provider for use on DSL Micro-filter.

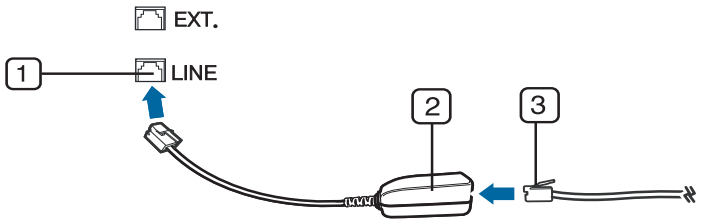

1 Line port
2 Micro filter
3 DSL modem / Telephone line (see "Rear view" on page 23).

Preparing to fax

Before you send or receive a fax, you need to connect the supplied line cord to your telephone wall jack (see "Rear view" on page 23). Refer to the Quick Installation Guide how to make a connection. The method of making a telephone connection is different from one country to another.

Sending a fax

When you place the originals, you can use either the document feeder or the scanner glass. If the originals are placed on both the document feeder and the scanner glass, the machine will read the originals on the document feeder first, which has higher priority in scanning.

1. Place a single document face down on the document glass, or load the documents face up into the document feeder (see "Loading originals" on page 48).
2. Select (fax) on the control panel.
3. Adjust the resolution and the darkness to suit your fax needs (see "Adjusting the document settings" on page 66).

Basic faxing

4 Enter the destination fax number (see "Keypad letters and numbers" on page 209).

5 Press (**Start**) on the control panel. The machine starts to scan and send the fax to the destinations.

- If you want to send a fax directly from your computer, use Samsung Network PC Fax (see "Sending a fax from your computer" on page 233).
- When you want to cancel a fax job, press (**Stop/Clear**) before the machine starts transmission.
- If you used the scanner glass, the machine shows the message asking to place another page.

Sending a fax manually

Perform the following to send a fax using (**On Hook Dial**) on the control panel.

If your machine is a handset model, you can send a fax using the handset (see "Variety feature" on page 10).

1 Place a single document face down on the document glass, or load the documents face up into the document feeder (see "Loading originals" on page 48).

2 Select (fax) on the control panel.

3 Adjust the resolution and the darkness to suit your fax needs (see "Adjusting the document settings" on page 66).

4 Press (**On Hook Dial**) on the control panel or lift the handset.

5 Enter a fax number using the number keypad on the control panel.

6 Press (**Start**) on the control panel when you hear a high-pitched fax signal from the remote fax machine.

Sending a fax to multiple destinations

You can use the multiple send feature, which allows you to send a fax to multiple locations. Originals are automatically stored in memory and sent to a remote station. After transmission, the originals are automatically erased from memory.

You cannot send faxes with this feature if you have chosen super fine as an option or if the fax is in color.

Basic faxing

1 Place a single document face down on the document glass, or load the documents face up into the document feeder (see "Loading originals" on page 48).

2 Select (fax) on the control panel.

3 Adjust the resolution and the darkness to suit your fax needs (see "Adjusting the document settings" on page 66).

4 Select (**Menu**) > **Fax Feature** > **Multi Send** on the control panel.

5 Enter the number of the first receiving fax machine and press **OK**.

You can press speed dial numbers or select a group dial number using the (**Address book**) button.

6 Enter the second fax number and press **OK**.

The display asks you to enter another fax number to send the document.

7 To enter more fax numbers, press **OK** when **Yes** appears and repeat steps 5 and 6.

You can add up to 10 destinations.

8 When you have finished entering fax numbers, select **No** at the **Another No.?** prompt and press **OK**.

The machine begins sending the fax to the numbers you entered in the order in which you entered them.

Receiving a fax

Your machine is preset Fax mode at the factory. When you receive a fax, the machine answers the call on a specified number of rings and automatically receives the fax.

Adjusting the document settings

Before starting a fax, change the following settings according to your original's status to get the best quality.

It may be necessary to press **OK** to navigate to lower-level menus for some models.

Resolution

The default document settings produce good results when using typical text-based originals. However, if you send originals that are of poor quality, or contain photographs, you can adjust the resolution to produce a higher quality fax.

Basic faxing

1 Select (fax) > (**Menu**) > **Fax Feature** > **Resolution** on the control panel.

2 Select the option you want and press **OK**.

- **Standard**: Originals with normal sized characters.
- **Fine**: Originals containing small characters or thin lines or originals printed using a dot-matrix printer.
- **Super Fine**: Originals containing extremely fine detail. **Super Fine** mode is enabled only if the machine with which you are communicating also supports the Super Fine resolution.

- For memory transmission, **Super Fine** mode is not available. The resolution setting is automatically changed to **Fine**.
- When your machine is set to **Super Fine** resolution and the fax machine with which you are communicating does not support **Super Fine** resolution, the machine transmits using the highest resolution mode supported by the other fax machine.

- **Photo Fax**: Originals containing shades of gray or photographs.

3 Press (**Stop/Clear**) to return to ready mode.

Darkness

You can select the degree of darkness of the original document.

The darkness setting is applied to the current fax job. To change the default setting (see "Fax" on page 193).

1 Select (fax) > (**Menu**) > **Fax Feature** > **Darkness** on the control panel.

2 Select a darkness level you want.

3 Press (**Stop/Clear**) to return to ready mode.

Using USB memory device

C48x series do not support USB memory port.

This chapter explains how to use a USB memory device with your machine.

About USB memory

USB memory devices are available with a variety of memory capacities to give you more room for storing documents, presentations, downloaded music and videos, high resolution photographs or whatever other files you want to store or move.

You can do the following tasks on your machine by using a USB memory device.

- Scan documents and save them on a USB memory device
- Print data stored on a USB memory device
- Restore backup files to the machine's memory
- Format the USB memory device
- Check the available memory space

Plugging in a USB memory device

Lift the scanner lid slightly and insert your USB memory device into the USB memory port. Close the scanner lid again before using the device.

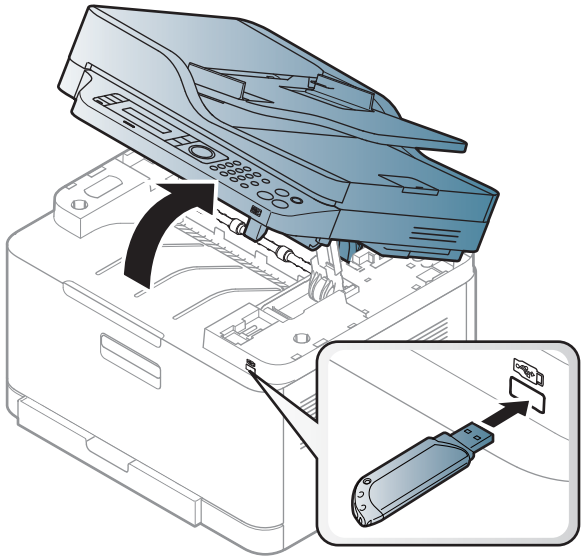

The USB memory port on the front of your machine is designed for USB V1.1 and USB V2.0 memory devices. Your machine supports USB memory devices with FAT16/FAT32 and a sector size of 512 bytes.

Check your USB memory device's file system from your dealer.

Using USB memory device

You must use only an authorized USB memory device with an A plug connector.

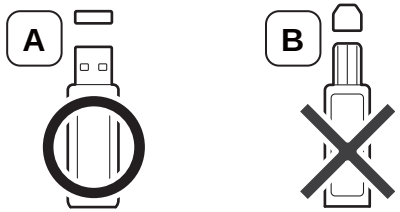

Use only a metal-shielded USB memory device.

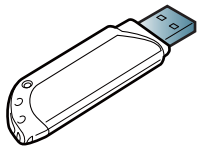

Only use a USB memory device that has obtained compatibility certification; otherwise, the machine might not recognize it.

- Do not remove the USB memory device while the machine is in operation or writing to or reading from USB memory. The machine warranty does not cover damage caused by user's misuse.
- If your USB memory device has certain features such as security settings and password settings, your machine may not automatically detect it. For details about these features, see the user's guide of the USB memory device.

Printing from a USB memory device

You can directly print files stored on a USB memory device.

File is supported by Direct Print option.

- PRN: Only files created by provided driver with your machine are compatible.

If you print PRN files created from other machine, the printout would be different.

- TIFF: TIFF 6.0 Baseline
- JPEG: JPEG Baseline
- PDF: PDF 1.7 or lower version

To print a document from a USB memory device

1. Insert a USB memory device into the USB memory port on your machine, and then press **Direct USB**.
2. Select **USB Print**.
3. Select the folder or file you want and press **OK**.

   If you see [+] or [D] in the front of a folder name, there are one or more files or folders in the selected folder.
4. Select the number of copies to be printed or enter the number.

Using USB memory device

5 Press **OK**, **Start** or **Print** to start printing the selected file.

After printing the file, the display asks if you want to print another job.

6 Press **OK** when **Yes** appears to print another job, and repeat from step 2.

Otherwise, press the left/right arrow to select **No** and press **OK**.

7 Press (**Stop/Clear**) to return to ready mode.

Scanning to a USB memory device

- Accessing menus may differ from model to model (see "Accessing the menu" on page 33)
- It may be necessary to press **OK** to navigate to lower-level menus for some models.

You can scan a document and save the scanned image onto a USB memory device.

Scanning

1 Insert a USB memory device into the USB memory port on your machine.

2 Place a single document face down on the document glass, or load the documents face up into the document feeder (see "Loading originals" on page 48).

3 Select (scan) > **Scan To USB** > **OK** on the control panel.

The machine begins scanning.

To scan multiple pages, select **Yes** while **Another Page? Yes/No** appears. After scanning is complete, you can remove the USB memory device from the machine.

Customizing Scan to USB

You can specify image size, file format, or color mode for each scanning to USB job.

1 Select (scan) > (**Menu**) > **Scan Feature** > **USB Feature** on the control panel.

2 Select the setting option you want appears.

- **Original Size:** Sets the image size.
- **Original Type:** Sets the original document's.
- **Resolution:** Sets the image resolution.

- **Color Mode:** Sets the color mode. If you select **Mono** in this option, you cannot select JPEG in **File Format**.
- **File Format:** Sets the file format in which the image is to be saved. If you select **JPEG** in this option, you cannot select **Mono** in **Color Mode**.
- **Darkness:** Sets the brightness level to scan an original.

3 Select the desired status you want and press **OK**.

4 Repeat steps 2 and 3 to set other setting options.

5 Press (**Stop/Clear**) to return to ready mode.

You can change the default scan settings. Refer to the Advanced Guide.

Managing USB memory

You can delete image files stored on a USB memory device one by one or all at once by reformatting the device.

If you see [+] or [D] in the front of a folder name, there are one or more files or folders in the selected folder.

After deleting files or reformatting a USB memory device, files cannot be restored. Therefore, confirm that you no longer need the data before deleting it.

Deleting an image file

1 Insert a USB memory device into the USB memory port on your machine, and then press **Direct USB**.

2 Select **File Manage** > **Delete** and press **OK**.

3 Select the file you want to delete and press **OK**.

4 Select **Yes**.

5 Press (**Stop/Clear**) to return to ready mode.

Formatting a USB memory device

1 Insert a USB memory device into the USB memory port on your machine, and then press **Direct USB**.

2 Select **File Manage** > **Format** and press **OK**.

3 Select **Yes**.

4 Press (**Stop/Clear**) to return to ready mode.

Using USB memory device

Viewing the USB memory status

You can check the amount of memory space available for scanning and saving documents.

1. Insert a USB memory device into the USB memory port on your machine, and then press **Direct USB**.
2. Select **Check Space**.
3. The available memory space appears on the display.
4. Press (**Stop/Clear**) to return to ready mode.

3. Maintenance

This chapter provides information about purchasing supplies, accessories and maintenance parts available for your machine.

- Ordering supplies and accessories 74
- Available supplies 75
- Available maintenance parts 76
- Storing the toner cartridge 77
- Redistributing toner 78
- Replacing the toner cartridge 80
- Replacing the imaging unit 82
- Replacing the waste toner container 84
- Monitoring the supplies life 86
- Setting the toner low alert 87
- Cleaning the machine 88
- Tips for moving & storing your machine 92

Ordering supplies and accessories

Available accessories may differ from country to country. Contact your sales representatives to obtain the list of available supplies, and maintenance parts.

To order Samsung-authorized supplies, accessories, and maintenance parts, contact your local Samsung dealer or the retailer where you purchased your machine. You can also visit **www.samsung.com/supplies**, and then select your country/region to obtain the contact information for service.

Available supplies

When supplies reach the end of their life spans, you can order the followings of supplies for your machine:

Type	Average yield[a]	Part name
Toner cartridge	• Average continuous black cartridge yield: Approx. 1,500 standard pages (Black) • Average continuous color cartridge yield: Approx. 1,000 standard pages (Yellow/Magenta/Cyan)	• **K404** (**CLT-K404S**): Black • **C404** (**CLT-C404S**): Cyan • **M404** (**CLT-M404S**): Magenta • **Y404**(**CLT-Y404S**): Yellow
Imaging unit	Approx. 16,000 images[b]	**CLT-R406**
Waste toner container	Approx. 7,000 images[b]	**CLT-W406**

a. Declared yield value in accordance with ISO/IEC 19798. The number of pages may be affected by operating environment, printing interval, graphics, media type and media size.
b. Image counts based on one color on each page. If you print documents in full color (Cyan, Magenta, Yellow, Black), the life of this item will be reduced by 25%.

Depending on the options, percentage of image area and job mode used, the toner cartridge's lifespan may differ.

When purchasing new toner cartridges or other supplies, these must be purchased in the same country as the machine you are using. Otherwise, new toner cartridges or other supplies will be incompatible with your machine due to different configurations of toner cartridges and other supplies according to the specific country conditions.

Samsung does not recommend using non-genuine Samsung toner cartridge such as refilled or remanufactured toner. Samsung cannot guarantee non-genuine Samsung toner cartridge's quality. Service or repair required as a result of using non-genuine Samsung toner cartridges will not be covered under the machine's warranty.

Available maintenance parts

You need to replace the maintenance parts at specific intervals to keep the machine in the best condition and avoid print quality and paper feeding problems resulting from the worn-out parts. Maintenance parts are mostly rollers, belts and pads. However, the replacement period and parts may differ depending on the model. Replacing maintenance parts can be performed only by an authorized service provider, dealer, or the retailer where you bought the machine. To purchase maintenance parts, contact the retailer where you bought the machine. The replacement period for the maintenance parts is informed by the "Samsung Printer Status" program. Or on the UI (User Interface) if your machine supports a display screen. The replacement period varies based on the operating system used, computing performance, application software, connecting method, paper type, paper size, and job complexity.

Storing the toner cartridge

Toner cartridges contain components that are sensitive to light, temperature and humidity. Samsung suggests users follow these recommendations to ensure optimal performance, highest quality, and longest life from your new Samsung toner cartridge.

Store this cartridge in the same environment in which the printer will be used. This should be in controlled temperature and humidity conditions. The toner cartridge should remain in its original and unopened package until installation – if original packaging is not available, cover the top opening of the cartridge with paper and store in a dark cabinet.

Opening the cartridge package prior to use dramatically shortens its useful shelf and operating life. Do not store on the floor. If the toner cartridge is removed from the printer, follow the instructions below to store the toner cartridge properly.

- Store the cartridge inside the protective bag from the original package.
- Store lying flat (not standing on end) with the same side facing up as if it were installed in the machine.
- Do not store consumables in any of the following conditions:
  - Temperature greater than 40°C (104°F).
  - Humidity range less than 20% or greater than 80%.
  - An environment with extreme changes in humidity or temperature.
  - Direct sunlight or room light.
  - Dusty places.
  - A car for a long period of time.
  - An environment where corrosive gases are present.
  - An environment with salty air.

Handling instructions

- Do not expose the cartridge to unnecessary vibrations or shock.

Toner cartridge usage

Samsung Electronics does not recommend or approve the use of non-Samsung brand toner cartridges in your printer including generic, store brand, refilled, or remanufactured toner cartridges.

Samsung's printer warranty does not cover damage to the machine caused by the use of a refilled, remanufactured, or non-Samsung brand toner cartridges.

Estimated cartridge life

Estimated cartridge life (the life of the toner cartridge yield) depends on the amount of toner that print jobs require. The actual print yield may vary depending on the print density of the pages you print on, operating environment, percentage of image area, printing interval, media type and/or media size. For example, if you print a lot of graphics, the consumption of the toner is higher and you may need to change the cartridge more often.

Redistributing toner

When the toner cartridge is near the end of its life:

- White streaks or light printing occurs and/or density varies from side to side.
- The **Status** LED blinks orange. The toner-related message saying that the toner is low may appear on the display.
- The computer's Samsung Printing Status program window appears on the computer telling you which color cartridge is low on toner (see "Using Samsung Printer Status" on page 255).

If this happens, you can temporarily improve print quality by redistributing the remaining toner in the cartridge. In some cases, white streaks or light printing will still occur even after you have redistributed the toner.

Illustrations on this user's guide may differ from your machine depending on its options or models. Check your machine type (see "Front view" on page 21).

- Do not use sharp objects such as a knife or scissors to open the toner cartridge package. They might scratch the drum of the cartridge.
- If toner gets on your clothing, wipe it off with a dry cloth and wash clothing in cold water. Hot water sets toner into fabric.
- When opening a scan unit, hold the document feeder and scan unit together.
- Printing even after the toner empty status can cause serious damage to your machine.

Redistributing toner

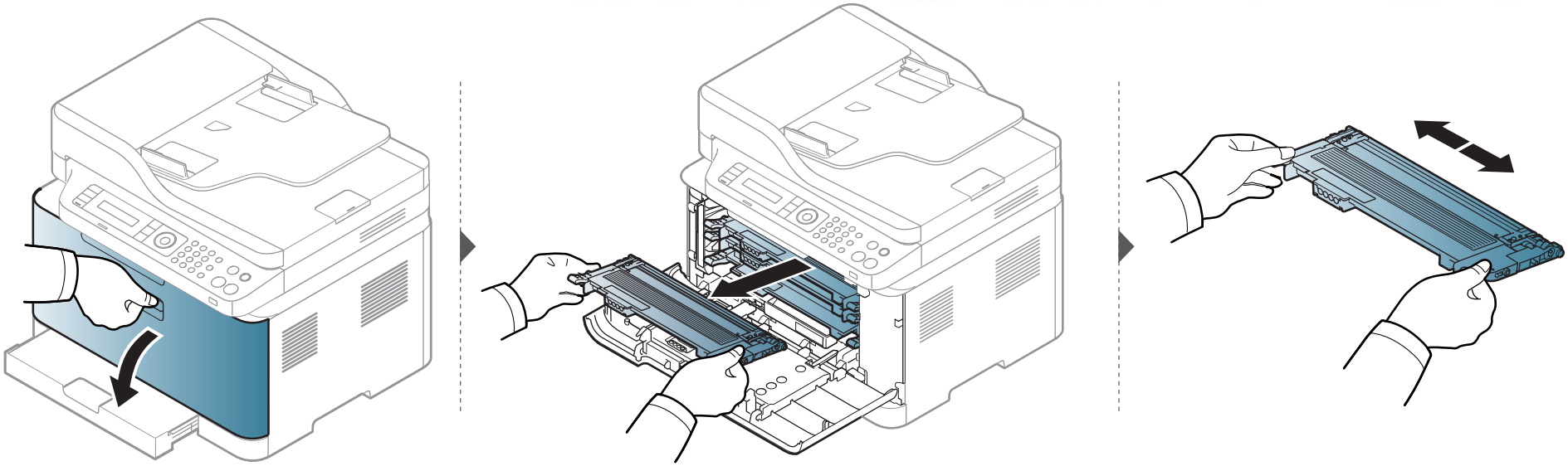

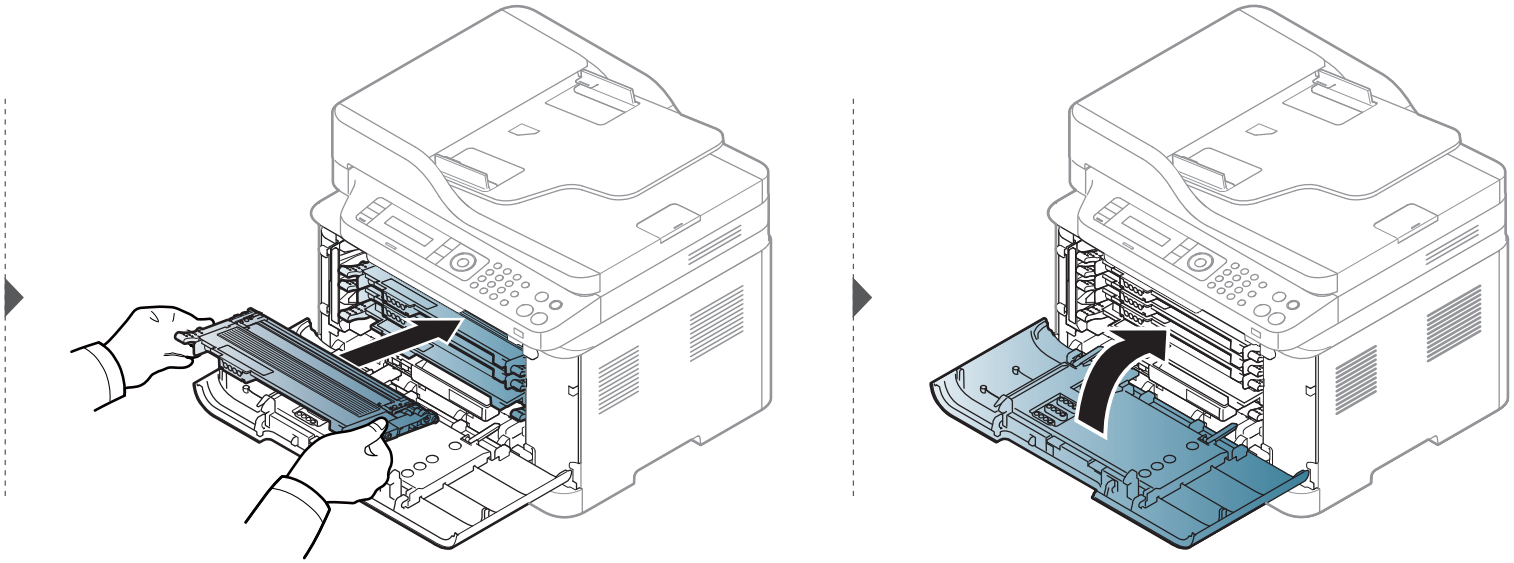

Replacing the toner cartridge

When a toner cartridge has reached the end of life, the Printing Status window appears on the computer, indicating the toner cartridge needs to be placed.

- Shake the toner cartridge thoroughly, it will increase the initial print quality.
- Illustrations on this user's guide may differ from your machine depending on its options or models. Check your machine type (see "Front view" on page 21).

- Do not use sharp objects such as a knife or scissors to open the toner cartridge package. They might scratch the drum of the cartridge.
- If toner gets on your clothing, wipe it off with a dry cloth and wash clothing in cold water. Hot water sets toner into fabric.
- When opening a scan unit, hold the document feeder and scan unit together.
- Printing even after the toner empty status can cause serious damage to your machine.

Replacing the toner cartridge

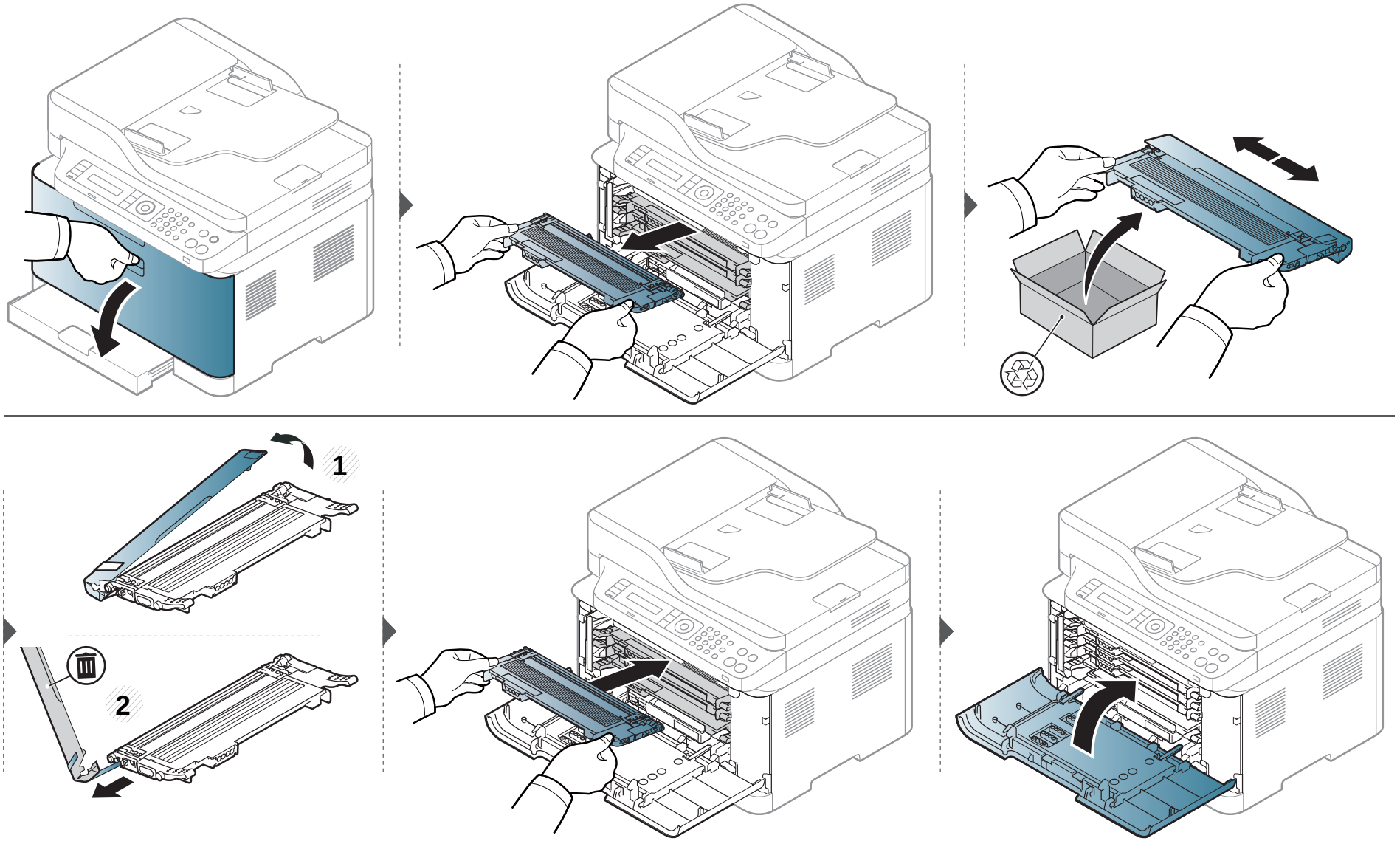

Replacing the imaging unit

When the life span of the imaging unit has expired, the Printing Status window appears on the computer, indicating the imaging unit needs to be placed. Otherwise, your machine stops printing.

- Don’t use sharp objects such as a knife or scissors to open the imaging unit package. You could damage the surface of the imaging unit.
- Be careful not to scratch the surface of the imaging unit.
- To prevent damage, do not expose the imaging unit to light for more than a few minutes. Cover it with a piece of paper to protect it if necessary.
- Before closing the front cover, make sure all toner cartridges are installed properly.

Replacing the imaging unit

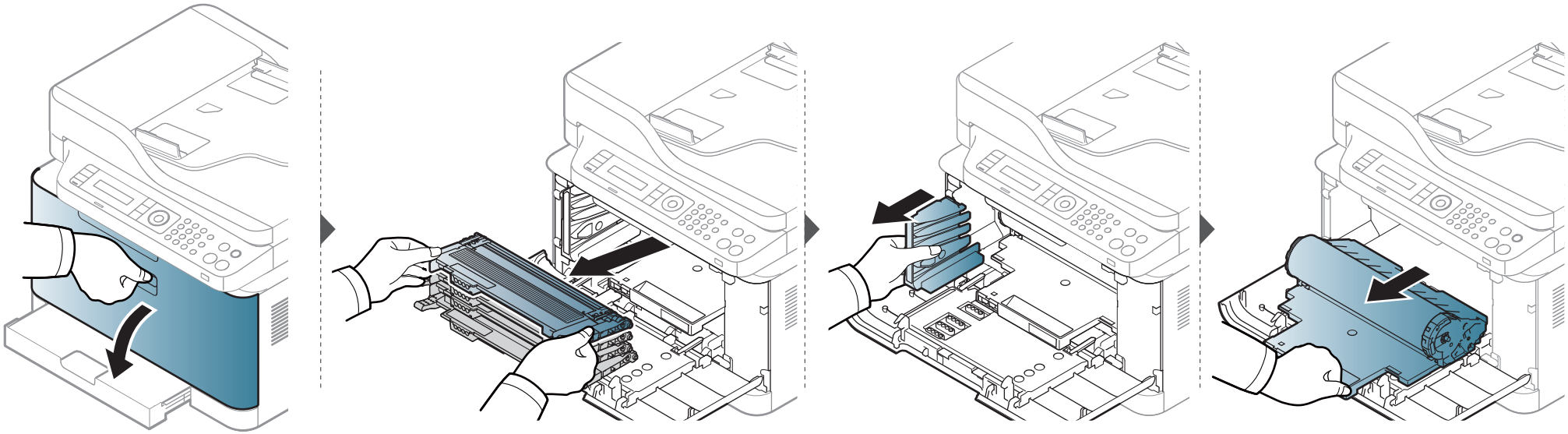

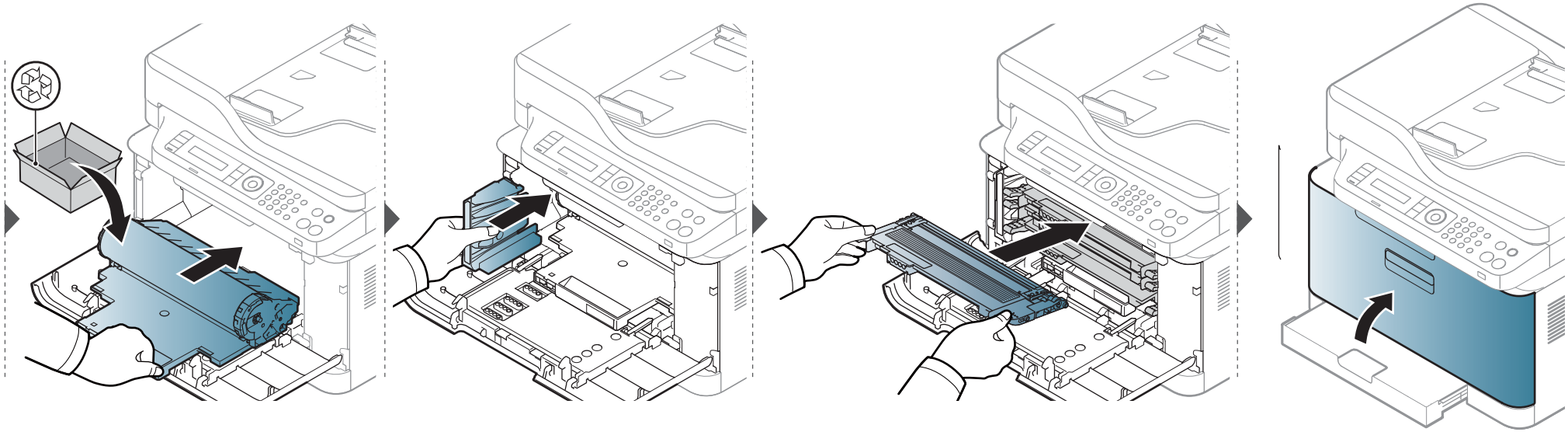

Replacing the waste toner container

When the life span of the waste toner container has expired, waste toner container-related message appears on the screen display of the control panel, indicating the waste toner container needs to be replaced. Check the waste toner container for your machine (see "Available supplies" on page 75). For information about installing the waste toner container, refer to the waste toner container installation guide included on the package.

- Toner particles can be released inside the machine but it does not mean the machine is damaged. Contact a service representative when print quality problems occur.
- When you pull out the waste toner container out of the machine, move the container carefully not to drop it from your hands.
- Make sure that you lay the waste toner container on a flat surface so that the toner does not spill.

Do not tilt or turn over the container.

Replacing the waste toner container

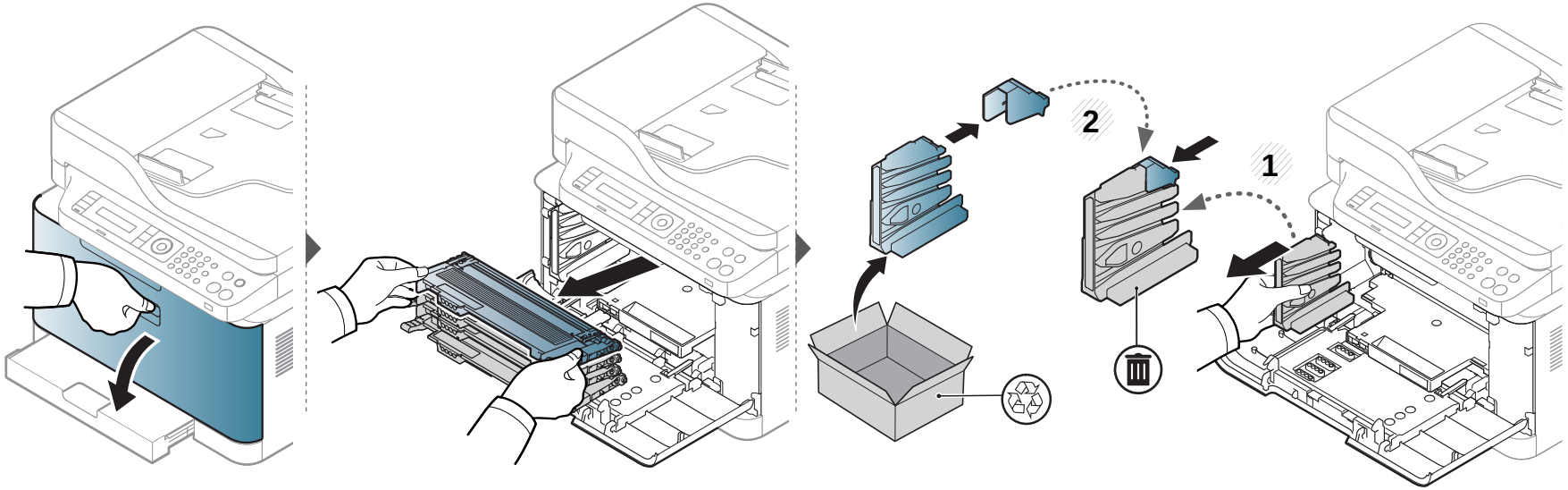

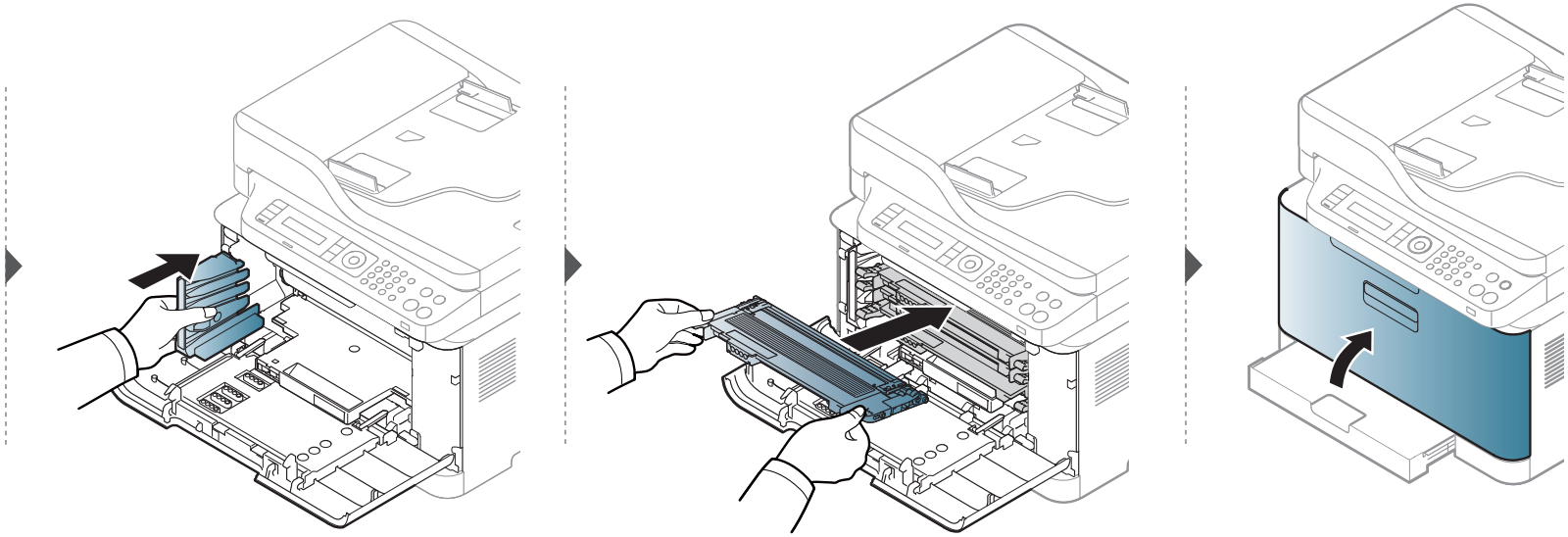

Monitoring the supplies life

If you experience frequent paper jams or printing problems, check the number of pages the machine has printed or scanned. Replace the corresponding parts, if necessary.

It may be necessary to press **OK** to navigate to lower-level menus for some models.

1 Select (**Menu**) > **System Setup** > **Maintenance** > **Supplies Life** on the control panel.

2 Select the option you want and press **OK**.

3 Press (**Stop/Clear**) to return to ready mode.

Setting the toner low alert

If the amount of toner in the cartridge is low, a message or LED informing the user to change the toner cartridge appears. You can set the option for whether or not this message or LED appears.

- You change the machine's setting set in the machine from Samsung Easy Printer Manager or SyncThru™ Web Service.
  - If your machine is connected to the local, you can set the machine's setting from **Samsung Easy Printer Manager** > **Advanced Setting** > **Device Settings** (see "Using Samsung Easy Printer Manager" on page 252).
  - If your machine is connected to the network, you can set the machine's setting from **SyncThru™ Web Service** > **Settings** tab > **Machine Settings** (see "Using SyncThru™ Web Service" on page 249).
- It may be necessary to press **OK** to navigate to lower-level menus for some models.

1 Select (**Menu**) > **System Setup** > **Maintenance** > **TonerLow Alert** on the control panel.

2 Select the option you want.

3 Press **OK** to save the selection.

Cleaning the machine

If printing quality problems occur or if you use your machine in a dusty environment, you need to clean your machine regularly to keep it in the best printing condition and use your machine longer.

- Cleaning the cabinet of the machine with cleaning materials containing large amounts of alcohol, solvents, or other strong substances can discolor or distort the cabinet.
- If your machine or the surrounding area is contaminated with toner, we recommend you use a cloth or tissue dampened with water to clean it. If you use a vacuum cleaner, toner blows in the air and might be harmful to you.

Cleaning the outside

Clean the machine cabinet with a soft, lint-free cloth. Dampen the cloth slightly with water, but be careful not to let any water drip onto or into the machine.

Cleaning the machine

Cleaning the inside

During the printing process, paper, toner, and dust particles can accumulate inside the machine. This buildup can cause print quality problems, such as toner specks or smearing. Cleaning the inside of the machine clears and reduces these problems.

- To prevent damage to the imaging unit, do not expose it to light for more than a few minutes. Cover it with a piece of paper, if necessary.
- Do not touch the green area of the imaging unit. Use the handle on the imaging unit to avoid touching this area.
- Use a dry lint free cloth when cleaning the inside of the machine, be careful not to damage the transfer roller or any other inside parts. Do not use solvents such as benzene or thinner. Printing quality problems can occur and cause damage to the machine.

- Use a dry lint-free cloth to clean the machine.
- Turn the machine off and unplug the power cord. Wait for the machine to cool down. If your machine has a power switch, turn the power switch off before cleaning the machine.
- Illustrations on this user's guide may differ from your machine depending on its options or models. Check your machine type (see "Front view" on page 21).
- When opening a scan unit, hold the document feeder and scan unit together.

Cleaning the machine

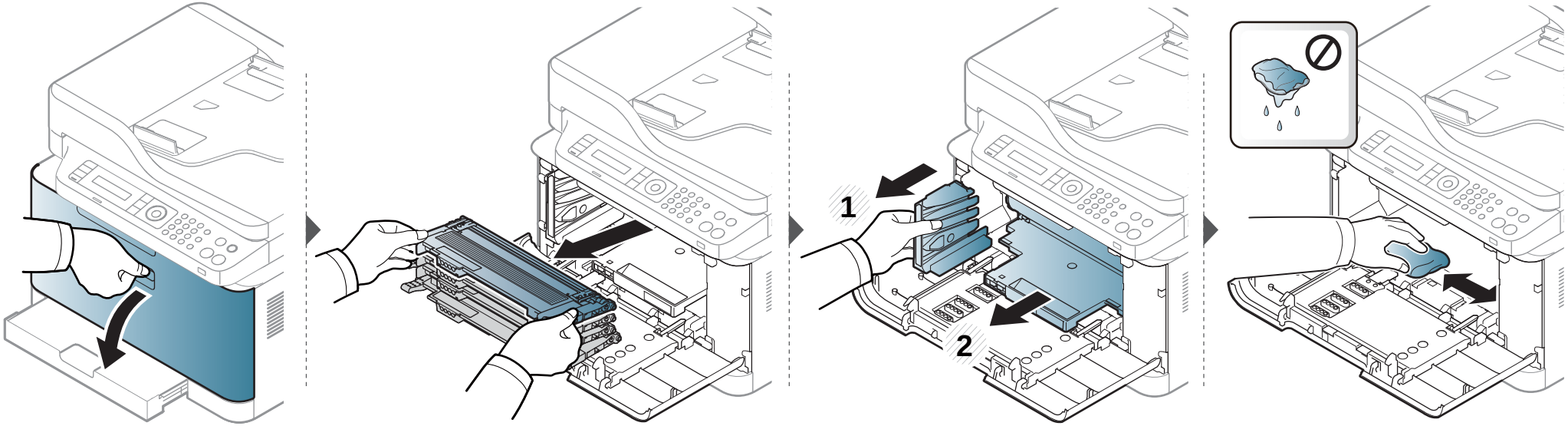

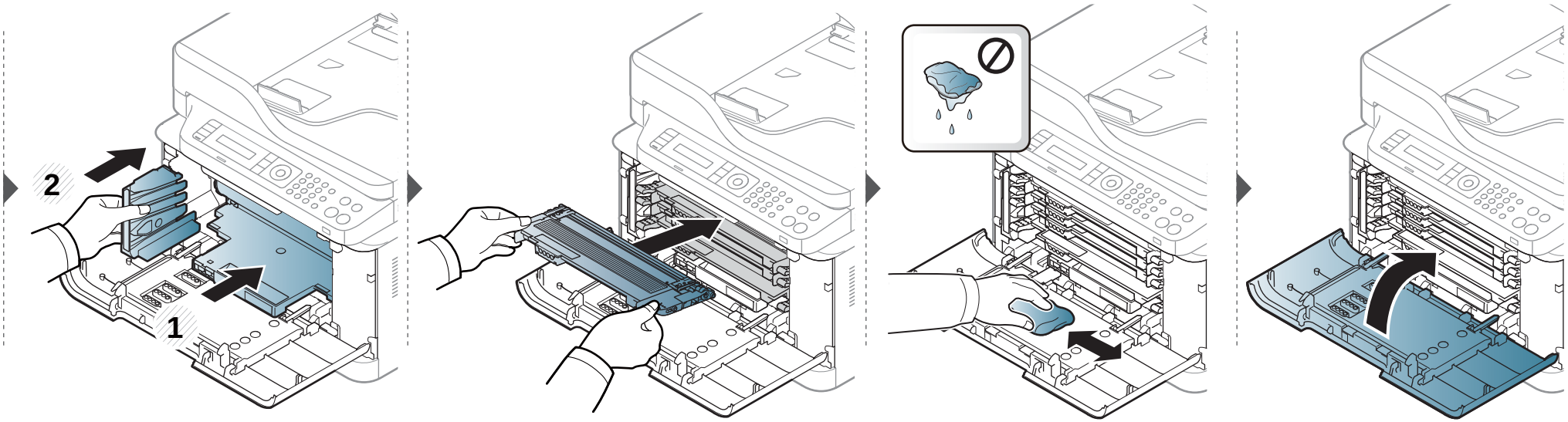

Cleaning the machine

Cleaning the scan unit

Keeping the scan unit clean helps ensure the best possible copies. We suggest that you clean the scan unit at the start of each day and during the day as needed.

- Turn the machine off and unplug the power cord. Wait for the machine to cool down. If your machine has a power switch, turn the power switch off before cleaning the machine.
- Illustrations on this user's guide may differ from your machine depending on its options or models. Check your machine type (see "Front view" on page 21).

1 Slightly dampen a soft, lint-free cloth or paper towel with water.

2 Lift and open the scanner lid.

3 Wipe the surface of the scanner until it is clean and dry.

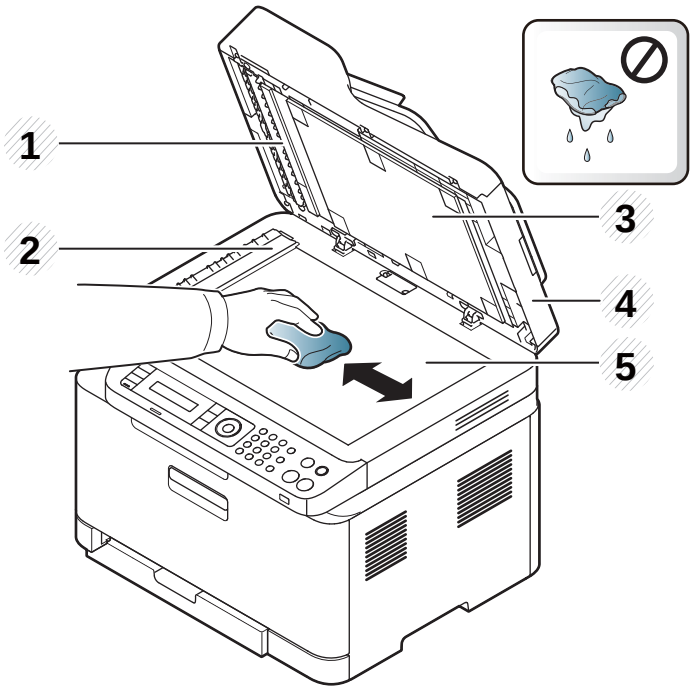

1 White bar
2 Document feeder glass
3 White sheet
4 Scanner lid
5 Scanner glass

4 Close the scanner lid.

Tips for moving & storing your machine

- When moving the machine, do not tilt or turn it upside down. Otherwise, the inside of the machine may be contaminated by toner, which can cause damage to the machine or reduce print quality.
- When moving the machine, make sure at least two people are holding the machine securely.

4. Troubleshooting

This chapter gives helpful information for what to do if you encounter an error.

- Tips for avoiding paper jams 94
- Clearing paper jams 95
- Understanding the status LED 102
- Understanding display messages 104

This chapter gives helpful information for what to do if you encounter an error. If your machine has a display screen, check the message on the display screen first to solve the error.

If you cannot find a solution to your problem in this chapter, refer to the **Troubleshooting** chapter in the Advanced Guide (see "Troubleshooting" on page 264).

If you cannot find a solution in the User's Guide or the problem persists, call for service.

Tips for avoiding paper jams

By selecting the correct medias, most paper jams can be avoided. To avoid paper jams, refer to the following guidelines:

- Ensure that the adjustable guides are positioned correctly (see "Tray overview" on page 39).
- Do not remove paper from the tray while your machine is printing.
- Flex, fan, and straighten paper before loading.
- Do not use creased, damp, or highly curled paper.
- Do not mix papers in a tray.
- Use only recommended print media (see "Print media specifications" on page 113).
- Perforated or embossed paper does not separate easily. Flex the sheets back and forth to loosen them, and fan them.

  Feed single paper from tray if there are multi-feeds or paper jams.
- Grain refers to the alignment of the paper fibers in a sheet of paper. Grain long paper is recommended.
- Do not use rough-edged paper.

Clearing paper jams

When an original document jams in the document feeder, a warning message appears on the display.

To avoid tearing the document, remove the jammed document slowly and carefully.

To prevent document jams, use the scanner glass for thick, thin or mixed paper- originals.

Clearing paper jams

In tray

Illustrations on this user's guide may differ from your machine depending on its options or models. Check your machine type (see "Front view" on page 21).

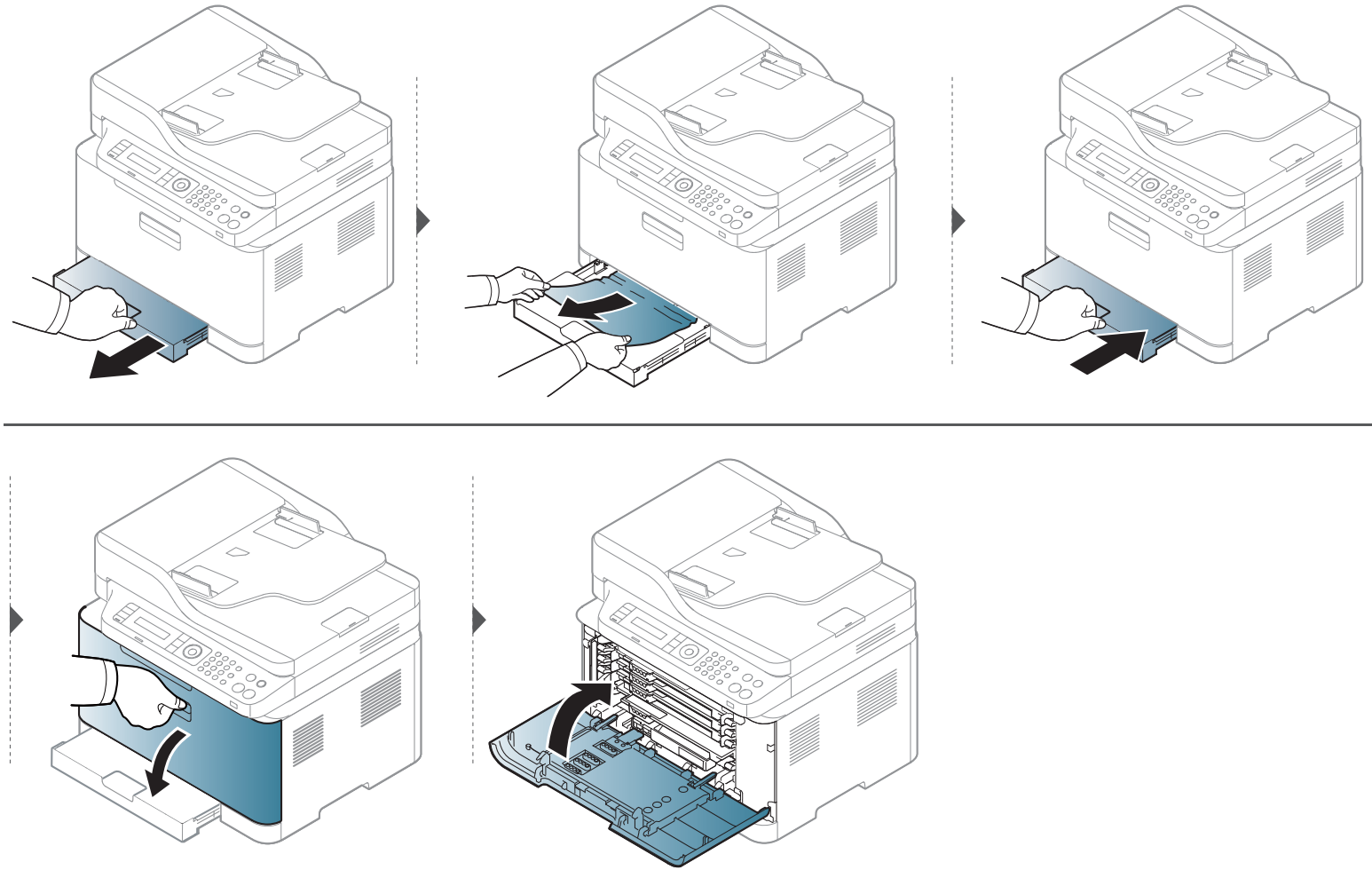

Clearing paper jams

Inside the machine

- The fuser area is hot. Take care when removing paper from the machine.
- Illustrations on this user's guide may differ from your machine depending on its options or models. Check your machine type (see "Front view" on page 21).

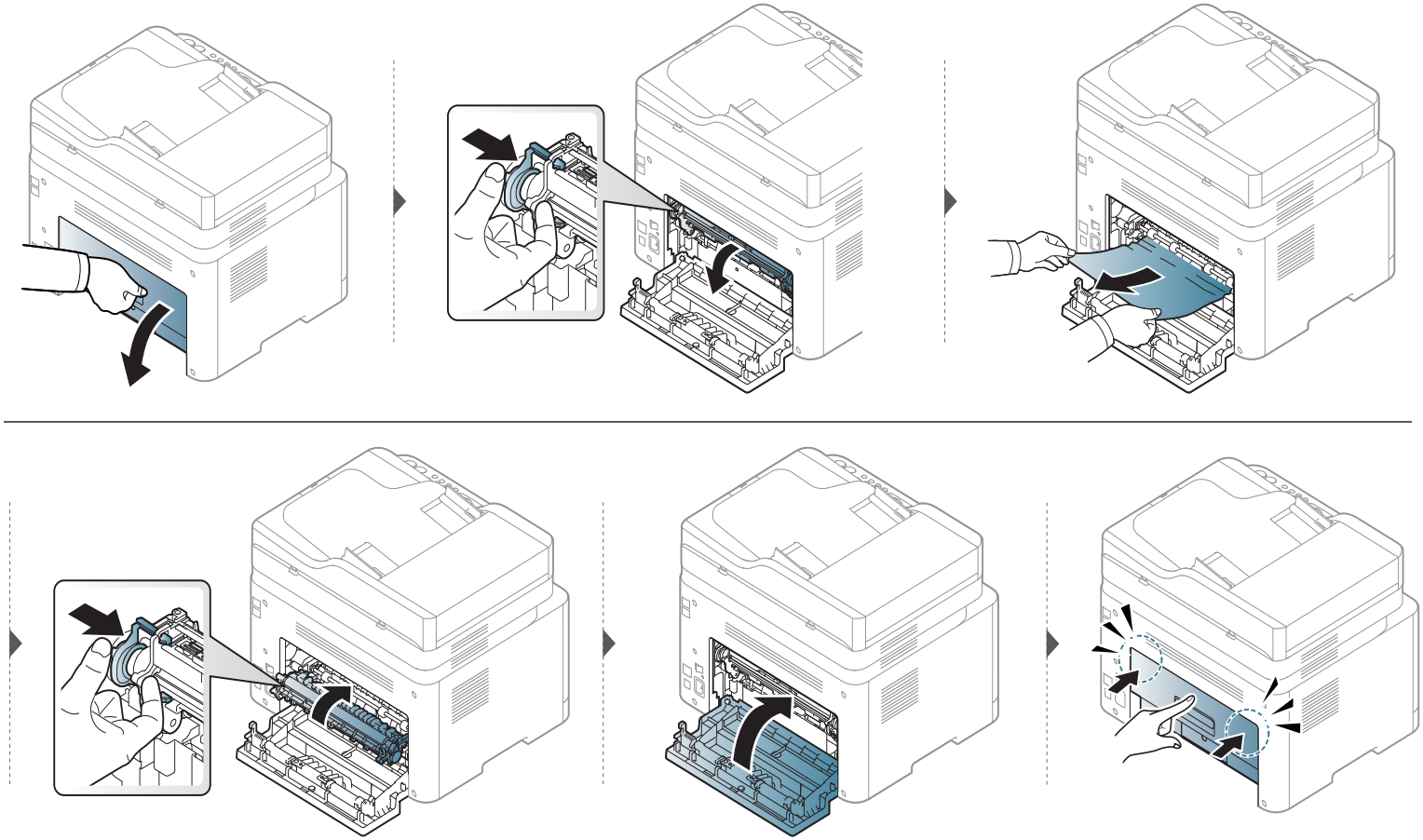

Clearing paper jams

In exit area

- The fuser area is hot. Take care when removing paper from the machine.
- Illustrations on this user's guide may differ from your machine depending on its options or models. Check your machine type (see "Front view" on page 21).

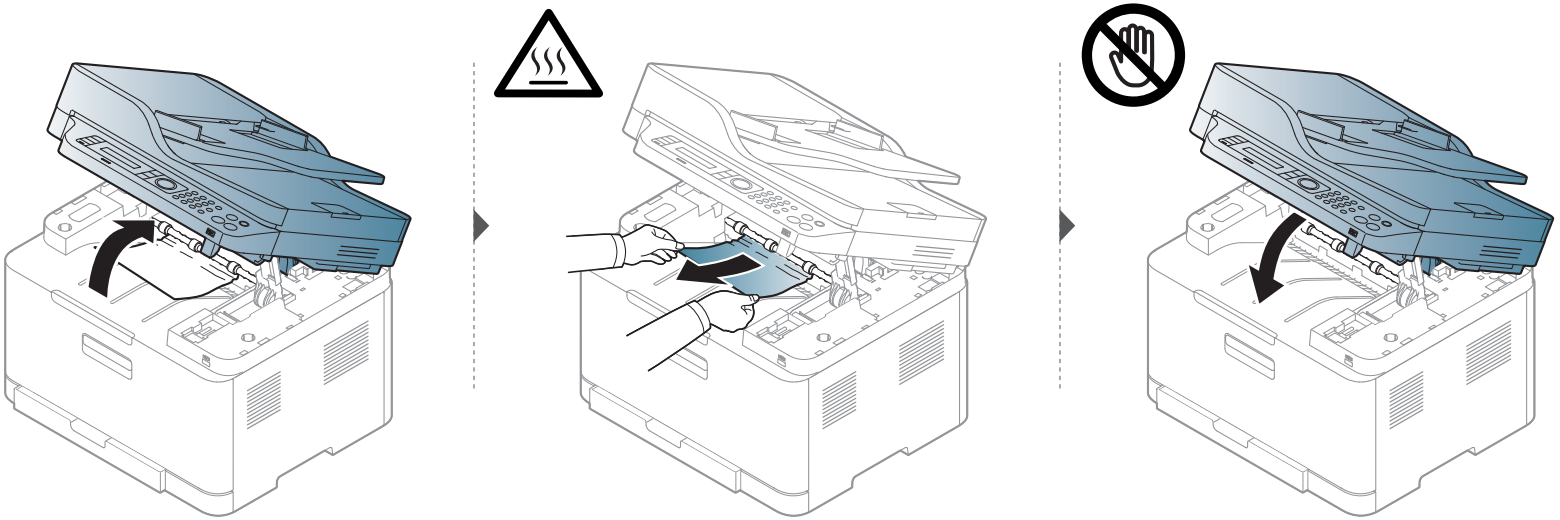

Clearing paper jams

Original paper jam

Original paper jam in front of scanner

- Illustrations on this user's guide may differ from your machine depending on its options or models. Check your machine type (see "Front view" on page 21).
- This troubleshooting may not be available depending on model or optional goods (see "Variety feature" on page 10).

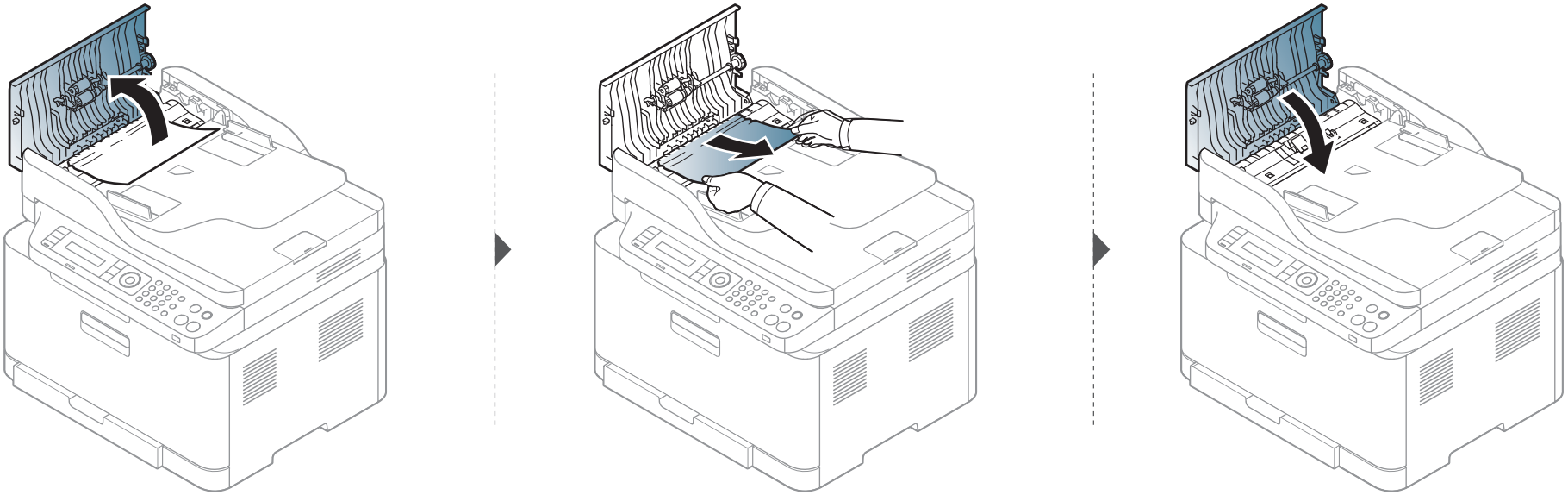

Clearing paper jams

Original paper jam inside of scanner
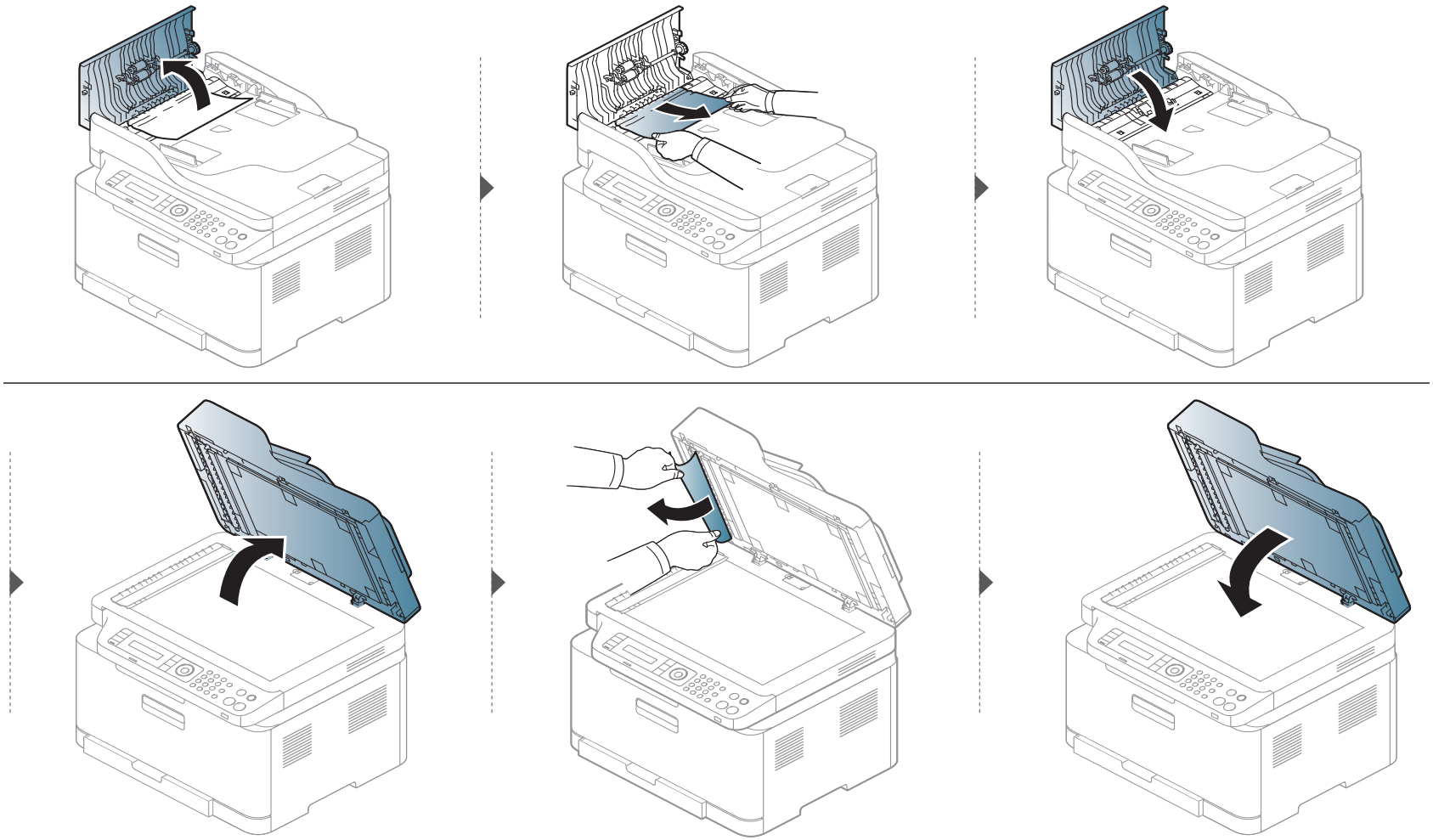
- Illustrations on this user's guide may differ from your machine depending on its options or models. Check your machine type (see "Front view" on page 21).
- This troubleshooting may not be available depending on model or optional goods (see "Variety feature" on page 10).