NTT docomo

Galaxy A23 5G

SC-56C

INSTRUCTION MANUAL

Introduction

Thank you for purchasing "SC-56C" mobile terminal.

Before and during use of your terminal, be sure to thoroughly read this document to ensure you are able to correctly use your terminal.

Manual

■ "クイックスタートガイド" (Quick start guide) (included in basic package) (In Japanese only)
Part names and functions, notes on usage, etc. are explained.

■ "Instruction Manual" app (eManual) (guide app of the terminal) (In Japanese only)
Detailed guidance of each function and the operations are explained.
This terminal has become even easier to use by enabling keyword searches, and the settings screen and apps to be directly opened from the displayed page.

【How to use】
- From the Home screen, ⊞ → "Instruction Manual"
- For the first time, download and install the app according to onscreen instructions.
- You can also call "Instruction Manual" (eManual) app from "my daiz".

■ "INSTRUCTION MANUAL" (PDF file)
Detailed guidance of each function and the operations are explained.
Download from NTT DOCOMO website.

Information

- In this manual, "SC-56C" mobile terminal is usually referred to as "terminal".
- In this manual, the contents are described at the time of purchase.
- The Operating System (OS) may be upgraded due to improve the quality of the terminal and add a function. At that time, the operation method may change. For information of additional function or changing operation steps, refer to NTT DOCOMO website. Also some applications used for former OS may not work or unintended failure may occur.
- Some apps and services may not be available depending on your contract.
  For details, see the NTT DOCOMO website.
- For inquiries to DOCOMO varies depending on your contract.
  Please see the last page of this manual for contact information.
- This manual describes in the case of "Red" as the terminal color and "docomo LIVE UX" the Home app.
- The contents of this manual and the URL of the website may be changed in the future without prior notice.
- The images and illustrations used in this manual are examples. They may differ from the actual products.
- Reproduction of the content of this manual in part or in whole is prohibited.

Accessories

■ SC-56C Phone

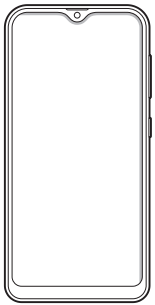

■ SIM ejector tool (sample)

■ クイックスタートガイド (Quick start guide) (In Japanese only)

You can check or purchase optional accessories compatible with the terminal (sold separately) in the DOCOMO online shop.
https://onlineshop.smt.docomo.ne.jp/options/search.html (In Japanese only)

Contents

Accessories ····· 1

Precautions

About usage of the terminal ····· 4
Osusume Functions ····· 5
Safety precautions (Always follow these directions) ····· 5
Handling precautions ····· 14
Waterproofness/Dustproofness ····· 18

Getting started

Part names and functions ····· 21
nanoUIM card ····· 22
microSD card ····· 25
Charging ····· 28
Turning power ON/OFF ····· 30
Initial settings ····· 31
Security codes used on the terminal ····· 32

Basic Operation

Basic Operation ····· 33
Advanced features ····· 35
Character entry ····· 36
Display and icons ····· 39
Recently-used apps ····· 41
Using split screen view ····· 42
SuguApp ····· 43

Home screen

Switching home apps ····· 45
docomo LIVE UX ····· 45
Edge panels ····· 50
One UI Home ····· 51
Apps screen ····· 53
App list ····· 54

Phone/Phonebook

Making a Call ····· 57
Receiving a call ····· 59
Operation during a call ····· 60
Recent Call ····· 61
Answering message ····· 62
Making an international call (WORLD CALL) ····· 63
Call settings ····· 63
Phonebook ····· 66

Mail/Web browser

docomo mail ····· 69
+Message ····· 69
Email ····· 72
Gmail ····· 74
Early Warning "Area Mail" ····· 74
Web browser ····· 75

Camera/Gallery

Camera ····· 77
Gallery ····· 83

Apps

dmenu ····· 84
dmarket ····· 84
Play Store ····· 85
Galaxy Store ····· 85
Osaifu-Keitai ····· 86
iD application ····· 88
GPS/Navigation ····· 88
Clock ····· 89
Calendar ····· 90
Galaxy Notes ····· 91
Voice Recorder ····· 92
Calculator ····· 92
docomo Data Copy ····· 93
S Health ····· 94

Settings

Setting menu ····· 95
Connections ····· 96
Sounds and vibration ····· 101
Notifications ····· 102
Display ····· 103
Wallpaper ····· 104
Themes ····· 105
Lock screen ····· 105
Biometrics and security ····· 106
Privacy ····· 109
docomo service/cloud ····· 109
Google™ ····· 110
Accounts and backup ····· 111
Digital Wellbeing and parental controls ····· 112
Battery and device care ····· 112
Apps ····· 114
General management ····· 115
Accessibility ····· 116

Software update ····· 119
About phone ····· 119

File management

Storage folder structure ····· 120
File operation ····· 120

Data communication

Bluetooth® communication ····· 122
NFC communication ····· 123

External device connection

Connecting to a PC ····· 124
Connecting to printer ····· 125
Connecting to other device ····· 126

International roaming

Overview of international roaming (WORLD WING) ····· 127
Available overseas services ····· 127
Before using the terminal overseas ····· 128
Making/Receiving calls in the country you stay ····· 129
International roaming settings ····· 131
After returning to Japan ····· 132

Appendix

Troubleshooting (FAQ) ····· 133
Updating software ····· 138
Warranty and After-Sales Service ····· 139
Main specifications ····· 141
Specific Absorption Rate (SAR) of Mobile Phones ····· 143
Export Administration Regulations ····· 146
Intellectual Property Right ····· 147

Index

Index ····· 148

Precautions

About usage of the terminal

- The terminal supports 5G, LTE, W-CDMA, GSM/GPRS, and wireless LAN and does not set SIM lock.
- Because your terminal uses wireless transmission, it may not function in locations where it is difficult for radio waves to penetrate, such as tunnels, underground passages and some buildings, in areas where radio waves are weak, or out of 5G service area and LTE service area. Even when you are high up in a tall building or condominium and nothing blocks your view outside, your terminal may not be able to receive or transmit signals. Also, communication may be interrupted even when using without moving while radio waves is strong and four antenna marks is displayed on your terminal.
- Because your terminal uses radio waves to communicate, it is possible that a third party may attempt to tap your calls. However, 5G, LTE, W-CDMA, GSM/GPRS system automatically applies a confidential communication function to all calls, so even if a third party could somehow tap a call, they only hear noise.
- The terminal encodes voice communication as digital data. When you are operating your terminal while moving to a location subject to weaker radio wave conditions, the transmitted digital data may not be correctly decoded and as a result the decoded voice may differ somewhat from the actual voice.
- Keep the data that you registered in the terminal separately by noting down periodically or saving to microSD card, PC, etc. Note that DOCOMO cannot assume any responsibility for any loss of saved contents of data resulting from malfunction, repair, changing of the model or other handling of the terminal.
- Therefore, verify the supplier and operating conditions of the apps or websites before use them. Some user-installed apps or accessed websites may give the terminal instability of this terminal operation, or may send your location information or personal information to outside via the Internet and the information may be used improperly.
- The terminal automatically performs communications for some functions, for example, to synchronize data, check the latest software, maintain connection with the server, etc.
  Additionally, when you download apps or watch video etc., a large amount of packet communication charges are executed. Therefore, it is highly recommended to use packet pack or packet flat-rate service.
- Depending on apps or services you use, a packet communication charges may be charged even if you perform Wi-Fi communication.
- The terminal internal storage or the microSD card does not have enough memory, running apps may not work normally. In such case, delete saved data.
- In case of loss of the terminal, set the screen lock password, etc. to ensure the security of the terminal (P.106).
- If you lose your terminal, change password and disable certification of online service accounts from PC so that Google Services such as Gmail, Google Play, and SNS, etc. should not be used by others.
- For services and apps provided by any third party included Google LLC thoroughly read the terms of use of Google LLC. NTT DOCOMO is not liable for malfunctions, for any disadvantage brought to you caused by the app provided by any third party included Google LLC you installed.
- If the terms of use, etc. appear, follow the instructions on the screen.
- Apps or services are subject to change without prior notice.
- For details about usage fee, etc., refer to the NTT DOCOMO website.
- Although the display is manufactured with extremely advanced technology, some dots may not be lit or be always lit. It is characteristic of the display and not malfunction. Please be forewarned.
- DOCOMO shall not be liable for commercially available optional equipment.

Osusume Functions

■ Dark mode

You can change the themes that is easy on your eyes so that you can use the terminal comfortably at night as well.
When the location information sets to ON, You can automatically set the time from sunset to sunrise. → P.103

■ Easy mode

You can use the home screen that have simple screen layout and bigger icon.
By increasing the recognition time of long presses, you can prevent unintended erroneous operations and use a high-contrast keyboard to make the input characters easier to see. → P.103

Safety precautions (Always follow these directions)

■ **Before using your terminal, read this "Safety precautions" to ensure safe use and handling.**

■ **These precautions are intended to protect you and others around you. Read and follow them carefully to avoid injury, damage to the product or damage to property.**

■ **The signs below differentiate between the levels of danger that can occur if the product is not used within the specified guidelines.**

⚠ DANGER	This sign denotes that death or serious injury (*1) may directly result from improper use.
⚠ WARNING	This sign denotes that death or serious injury (*1) may result from improper use.
⚠ CAUTION	This sign denotes that minor injury (*2) or damage (*3) to property may result from improper use.

*1 Serious injury: This refers to loss of sight, injury, burns (high- and low-temperature), electric shock, broken bones, injuries with residual aftereffects from poisoning, etc., and injuries requiring hospital admission for treatment or long term hospital attendance as an outpatient.

*2 Minor injury: This refers to injuries, burns (high- and low-temperature), electric shock, etc. that do not require hospital admission for treatment or long-term hospital attendance as an outpatient.

*3 Physical damage: This refers to extended damage to buildings, furniture, livestock, pets, etc.

■ The symbols below show specific directions.

Don't	This symbol denotes that the action is prohibited.
No disassembly	This symbol denotes that disassembling the terminal or its components is not allowed.
No liquids	This symbol denotes that the terminal should not be used in areas splashed with water, neither should it be wet with water.
No wet hands	This symbol denotes that using the terminal or its components with wet hands is not allowed.
Do	This symbol denotes that an instruction must be obeyed at all times.
Unplug	This symbol denotes that the equipment should be unplugged.

1. Handling the terminal, adapter, nanoUIM card (common)

⚠ DANGER

Don't

Do not use, store or leave the equipment in hot places (e.g. by the fire, near a heater, under a kotatsu or the bedclothes, in direct sunlight, in a car in the hot sun, etc.).
May cause fire, burns, injuries or electric shocks, etc.

Don't

Do not put the equipment into heating cooking device such as microwave oven, IH cooker or high pressure container such as pressure cooker.
May cause fire, burns, injuries or electric shocks, etc.

Don't

Do not pour sand, soil or mud on the product or place the product directly on sand, soil or mud. Avoid touching the product with a hand covered with sand, etc.
May cause fire, burns, injuries or electric shocks, etc.
For waterproofness/dustproofness, refer to the following:
→ P.18 "Waterproofness/Dustproofness"

Don't

Do not charge the product if it is wet with liquid like water (drinking water, perspiration, sea water, pet urine, etc.). Do not charge the product in a bathroom or other water place.
May cause fire, burns, injuries or electric shocks, etc.
For waterproofness, refer to the following:
→ P.18 "Waterproofness/Dustproofness"

Don't

Do not apply a large amount of force or bend the terminal. Particularly when putting the terminal in your pocket and carrying it around, do not bump or press it against anything.
The internal battery may damage and may result in fire, burns, injuries, etc.
* Note the following examples:
· Sitting or squatting when the terminal is in your pants or skirt pocket.
· Getting the terminal caught in a door or car door when it is in your shirt pocket.
· Sitting or stepping on the terminal when it is on a sofa, bed, blankets, or other soft items, or on the floor.
· Putting the terminal between the seats of the train or the bus, etc.

Don't

Do not remove internal battery of this terminal.
May cause fire, burns, injuries or electric shocks, etc.

Don't

The back cover of the terminal cannot be removed. Do not remove it.
May cause fire, burns or injuries, etc.

No disassembly

Do not attempt to disassemble or modify the equipment.
May cause fire, burns, injuries or electric shocks, etc.

No liquids

Do not let the equipment get wet with liquid like water (drinking water, perspiration, sea water, pet urine, etc.).
May cause fire, burns, injuries or electric shocks, etc.
For waterproofness, refer to the following:
→ P.18 "Waterproofness/Dustproofness"

No liquids

Do not let the equipment get wet with water or other liquids (drinking water, sweat, sea water, urine of pet animals, etc.) into the charging jack or external connection jack.
May cause fire, burns, injuries or electric shocks, etc.
For waterproofness, refer to the following:
→ P.18 "Waterproofness/Dustproofness"

Do

Use the optional equipment specified by NTT DOCOMO for the terminal.
Use other than specified may cause fire, burns, injuries or electric shocks, etc.

⚠ WARNING

Don't

Do not subject the equipment to strong forces, impacts or vibration such as being dropped, being stepped on, or being thrown, etc.
May cause fire, burns, injuries or electric shocks, etc.

Don't

Do not allow conductive materials (metal pieces, pencil lead, etc.) to come into contact with the charging jack or external connection jack, or dust to get inside it.
May cause fire, burns, injuries or electric shocks, etc.

Don't

Do not cover or wrap the equipment with a blanket, etc. while using or charging.
May cause fire or burns, etc.

Do

If charging is not completed after the specified charging time, stop charging.
Overcharging the battery may cause fire, burns or injuries, etc.

Do

Turn the terminal OFF and stop charging before entering a place where there is a possibility of flammable gases being generated or a place where there is a possibility of dust being generated.
Catching fire of flammable gases may cause explosion or fire, etc.

Do

When using the terminal in a gas station, etc., follow the instructions of the facility.
Do not charge in the gas station, etc.
Also, when you use the terminal in a gas station, etc., be careful of falling the terminal and do not use it while refueling.
Catching fire of flammable gases may cause explosion or fire, etc.

Do

When anything is different from before, such as the equipment generates strange smells or strange sounds, emits smoke, produces heat, becomes discolored or deformed, etc. during use, charging or while being stored, then perform the following operations.

· Remove the power plug from outlet or accessory socket.
· Turn the terminal OFF.

If the above operations are not performed, this may cause fire, burns, injuries or electric shocks, etc.

⚠ CAUTION

Don't

Do not use damaged terminal.

May cause fire, burns or injuries, etc.

Don't

Do not leave the equipment on unstable or sloping surfaces. Especially while the vibration mode set.

May fall and cause injuries, etc.

Don't

Do not store the equipment in extremely humid, dusty or hot areas.

May cause fire, burns, or electric shocks, etc.
For waterproofness/dustproofness, refer to the following:
→ P.18 "Waterproofness/Dustproofness"

Don't

Children using the equipment should be instructed in proper operation by an adult. Make sure they use the product correctly.

May cause accidentally swallowed, injuries or electric shocks, etc.

Don't

Don't store the equipment reach of small children. Please be careful about the storage place of the small parts such as nanoUIM card/microSD card tray and sim ejector tool especially.

May cause accidentally swallowed, injuries or electric shocks, etc.

Do

Exercise caution that not need to be temperature of the terminal rises when the equipment is continuously being can be used for prolonged periods and while it is charging. In addition, be careful to not unintentionally continuously touch the terminal if you put it in your pocket or fall a sleep.

If you use apps, make calls, perform data communications, watch videos, etc. while charging the battery for a long time, the temperatures of the product and the adapter may rise. Directly touching a hot part for a long time, you may have redness, itching or rash on your skin, or it may result in low-temperature burns etc. depending on your constitution and/or health condition.

2. Handling the terminal

⚠ DANGER

Don't

Do not put the battery in a fire or attempt to heat it.

May cause fire, burns or injuries, etc.

Don't

Do not puncture with sharp object (a nail, etc.), strike with hard object (a hammer, etc.), stomp on, or apply excessive force on the terminal.

May cause fire, burns or injuries, etc.

Do

If the substance inside the terminal gets into your eyes or mouth, etc., rinse with clean water and seek medical care immediately.

The substance inside the terminal may cause loss of sight or poor health, etc.

⚠ WARNING

Don't

Do not lighten the Flash/Light near eyes. Especially, when you capture babies or infants, keep the product enough distance away from them.

May cause eyesight damage. Accident may result from being dazzled or shocked.

Don't

Do not turn on the Flash/Light and face the product to drivers.
It is an impediment to driving and may cause an accident, etc.

Don't

Do not look at a flashing screen for a prolonged period.
May cause seizure or loss of consciousness.

Don't

Do not put foreign objects such as liquid like water (drinking water, perspiration, sea water, pet urine, etc.) or metal pieces (such as cutter blades and staples) or flammable into nanoUIM card/microSD card tray.
Please do not mistake the insertion location and direction of the nanoUIM card or microSD card.
May cause fire, burns, injuries or electric shocks, etc.

Don't

Do not expose the camera lens to direct sunlight, etc. for a prolonged period.
The light-gathering capabilities of the lens may cause fire, burns, injury, etc.

Do

When boarding an airplane, turn the terminal OFF or turn airplane mode on.
As there are usage restrictions in an airplane, follow the instructions from the airline.
Failure to do so may cause airplane electronic equipment to fail or malfunction by radio wave.
If you commit any prohibited acts, such as using the phone in an airplane, you will be punished in accordance with the law.

Do

When using the terminal in a medical facility, follow the instructions of the facility.
Turn the terminal OFF in areas where use is prohibited.
Failure to do so may cause electronic equipment or electronic medical equipment to fail or malfunction by radio wave.

Do

When using the hands free call, ringtone is ringing loudly, or in the standby mode, be sure to keep this terminal off of the ears.
And, when connecting the earphone/microphone, etc. to the product and play a game, video or music, etc. adjust the volume moderately.
If you set the terminal to hands free and make a call, a loud noise will emanate from the terminal.
Even during standby, a ringtone or an alarm may sound suddenly.
Using the terminal continuously for a long time at a loud volume may cause hearing loss, etc.
Also, having the volume too loud may prevent you from hearing sounds around you and might in turn lead to a traffic accident.

Do

If you have weak heart, be careful when setting the vibrate ringtone (vibration) or ringtone volume setting.
The vibrate ringtone (vibration) or ringtone suddenly activating or ringing may affect your heart.

Do

When you use electronic medical equipment, check with the equipment manufacturer to determine how the equipment is affected by radio waves before using.
May cause harmful effect on electronic medical equipment, etc. by radio wave.

Do

Turn the terminal OFF near high-precision electronic control equipment or electronic equipment using low-power signals.
Failure to do so may cause the equipment to fail or malfunction by radio wave.
* Examples of electronic equipment to avoid Hearing aids, implanted pacemakers or defibrillators, other electronic medical equipment and other automatic control equipment. Users wearing implanted pacemakers or defibrillators or other electronic medical equipment should check with the manufacturer or sales outlet about the effect of radio wave on the equipment.

Do

When the glasses such as display or camera lens are accidentally broken, be careful of broken glass or exposed internal parts of the terminal.
If you mistakenly touch broken or exposed parts, it may cause burns, injuries or electric shocks, etc.

Do

Should the substance inside the internal battery leak or emit a strange smell, immediately stop use and move it away from fire.
The leaked fluid may catch fire and may cause ignition or explosion.

Do

Take measures to prevent pets from biting on the terminal.
The internal battery may damage and may result in fire, burns, injuries, etc.

⚠ CAUTION

Don't

Before using the motion sensor, be sure to check safety around you, firmly grip your terminal and do not swing it more than necessary.
May cause accident such as injuries, etc.

Don't

If display part is accidentally broken and internal substance leaks out, do not make the substance contact with your skin of face or hands, clothes, etc.
May cause eye or skin problems, etc.
If the substance gets into your eyes or mouth, etc. or comes into contact with your skin or clothes, rinse with clean water immediately.
And if it gets into your eyes or mouth, etc., rinse with clean water and seek medical care immediately.

Don't

Do not dispose with regular trash.
May cause fire, burns or injuries, etc. Environmental damage may also be caused. If the terminal becomes no longer needed, bring it to an outlet such as the docomo shop or follow the instructions given by the collecting municipalities.

Don't

Should the substance inside the internal battery leak, avoid it from coming in contact with your face, hand or clothes.
May cause eye or skin problems, etc.
If the substance gets into your eyes or mouth, etc. or comes into contact with your skin or clothes, rinse with clean water immediately.
And if it gets into your eyes or mouth, etc., rinse with clean water and seek medical care immediately.

Do

When you remove nanoUIM card, be careful of the nib of SIM ejector tool or paper clip not to injure parts of your body such as your fingers.
May cause injuries when you touch the nib of SIM ejector tool or paper clip.

Do

To use the terminal in car, check with automobile manufacturer or dealer to determine how the device is affected by radio waves before using.
Using the phone in some vehicle models can cause the vehicle's electronic equipment to malfunction by radio wave. In that case, stop using the terminal immediately.

Do

If you develop skin problems, stop using the terminal immediately, and seek medical care.
Mobile phones can give some users skin problems such as itching, allergic reactions or rashes.
For parts materials
→ P.13 "Material list"

Do

Be sure to check that there are no metal fragments (such as cutter blades or staples) adhered to the magnetic parts used in the receiver, rear camera, speaker, and vibrator (right bottom of the rear side) of the terminal.
Adhesion of such fragments may cause injury.

Do

When watching the display, take a certain distance from the display in a fully bright place.
Watching the display in the dark or watching too close may cause reduced visual acuity, etc.

3. Handling adapter

⚠ WARNING

Don't
Do not use if the cord of the adapter gets damaged.
May cause fire, burns, or electric shocks, etc.

Don't
Always use the DC adapter with a negative-ground vehicle. Do not plug it into a positive-ground vehicle.
May cause fire, burns, or electric shocks, etc.

Don't
When it starts to thunder, do not touch the adapter.
May cause electric shocks, etc.

Don't
Do not short the charging jack while it is connected to the outlet or accessory socket. Do not touch the charging jack with a part of your body such as your hand or finger.
May cause fire, burns, or electric shocks, etc.

Don't
Do not place heavy objects on the cord of the adapter.
May cause fire, burns, or electric shocks, etc.

Don't
When you insert and remove the AC adapter from the outlet, do not contact metal objects with the jack.
May cause fire, burns, or electric shocks, etc.

Don't
Do not connect the voltage converter (travel converter for overseas travel, etc.) to the AC adapter.
May cause ignite, heat or electric shocks, etc.

Don't
Do not apply excessive force to the terminal connected to the adapter.
May cause fire, burns, injuries or electric shocks, etc.

No wet hands
Do not touch the cord of the adapter cord, charging jack or power plug with wet hands.
May cause fire, burns, or electric shocks, etc.

Do
Only use with the specified power source and voltage. When charging the terminal overseas, use AC adapter for global use.
If incorrect power source and voltage is used, this may cause fire, burns or electric shocks, etc.
AC adapter: 100 VAC (Connect to the AC outlet for internal household use)
AC adapter for global use: Between 100 VAC and 240 VAC (Connect to the AC outlet for internal household use)
DC adapter: 12 VDC, 24 VDC (specific for negative ground vehicle)

Do
If the DC adapter's fuse blows, replace it only with the specified fuse.
If fuses other than those specified are used, this may result in fires, burns, or electric shocks, etc. Confirm specified fuses via individual user's manuals.

Do
Wipe off any dust that accumulates on the power plug.
If the terminal is used with dust adhering to it, this may result in fires, burns, or electric shocks, etc.

Do
When you connect the adapter to the outlet or accessory socket, do not fail to properly connect to the outlet.
If not properly connected, this may result in fires, burns, or electric shocks, etc.

Do
When you disconnect the power plug from the outlet or accessory socket, do not put excessive force such as pulling the cord of the adapter. Instead, hold the adapter to disconnect.
If the adapter cord is pulled on, this may damage, fire, burns, or electric shocks, etc.

Do
When unplugging and plugging in the adapter from and into the terminal, do not forcibly pull on the cord, etc., and straightly unplug and plug in the adapter from and into the connecting terminals.
If not properly unplugged or plugged in, this may cause fire, burns, injuries, electric shocks, etc.

Do

Immediately discontinue use if the charging jack is bent or deformed. Do not try to straighten and re-use a deformed charging jack.
Due to the short of connection terminal, it may result in fire, burns, injury, electric shock, etc.

Unplug

Always remove the power plug from the outlet or accessory socket when not using.
If the power plug is left plugged in, this may cause fire, burns, electric shocks, etc.

Unplug

Immediately remove the power plug from the outlet or accessory socket if liquid like water (drinking water, perspiration, sea water, pet urine, etc.) adheres to the adapter.
It may short deposit, etc. and may cause fire, burns or electric shocks, etc.

Unplug

Always remove the power plug from the outlet or accessory socket when cleaning the equipment.
If not doing unplugged, may cause fire, burns or electric shocks, etc.

⚠ CAUTION

Don't

Do not touch an adapter continuously that has been connected to the outlet or accessory socket.
May cause burns, etc.

4. Handling nanoUIM card

⚠ CAUTION

Do

Be careful of the cut surface when handling nanoUIM card.
May cause injuries, etc. by the sharp cut surface.

5. Handling mobile phones near electronic medical equipment

⚠ WARNING

Do

Wearers of the electronic medical equipment such as implanted pacemakers or defibrillators must carry and use the terminal at least 15 cm away from the implanted device.
The terminal's signals may affect the operation of the electronic medical equipment.

Do

When electronic medical equipment other than implanted pacemakers or defibrillators are in use outside of medical facilities (such as in home care settings), check with not need to be device is affected by electrical signals.
The terminal's signals may affect the operation of the electronic medical equipment.

Do

When you are in a crowd etc. and you have difficulties to keep a distance of 15 cm or more from others, turn the airplane mode on or power off the terminal not to transmit signals.
There may be wearers of medical equipment such as implanted pacemakers or defibrillators around you. The terminal's signals may affect the operation of the electronic medical equipment.

Do

When using the product in a medical facility, be sure to observe the regulations of the facility.
The terminal's signals may affect the operation of the electronic medical equipment.

6. Material list

Part	Material	Surface treatment
Side key, Volume UP key/Volume DOWN key	PC-GF20%	Coating
Display (touch screen)	Glass	AF coating
Receiver	PC sheet	—
Headphone connection jack	Copper+Titanium	Gold plating
Headphone connection jack surrounding area	PC-GF10%	Coating
USB Type-C connection terminal	Corson Alloy	Gold plating
USB Type-C connection terminal surrounding area	PC-GF10%	Coating
Speaker	PC-GF10%	Coating
Exterior case (side, top, bottom)	PC-GF10%	Coating
nanoUIM card/microSD card tray	PC	—
nanoUIM card/microSD card tray (side)	PC	Coating
nanoUIM card/microSD card tray (packing)	LSM (Silicone)	—
Rear camera surrounding area	PC	—
Rear camera lens panel	Glass	AF coating
Flash/Light lens	PMMA	—
Back cover	PC	Coating on the rear surface
SIM ejector tool (sample)	STS304	Barrel polishing

7. Handling samples (SIM ejector tool)

⚠ DANGER

Don't

Do not use, store or leave the equipment in hot places (e.g. by the fire, near a heater, under a kotatsu or the bedclothes, in direct sunlight, in a car in the hot sun, etc.).
May cause fire, burns, injuries or electric shocks, etc.

Don't

Do not put the equipment into heating cooking device such as microwave oven, IH cooker or high pressure container such as pressure cooker.
May cause fire, burns, injuries or electric shocks, etc.

⚠ WARNING

Don't

Do not subject the equipment to strong forces, impacts or vibration such as being dropped, being stepped on, or being thrown, etc.
May cause fire, burns, injuries or electric shocks, etc.

Don't

The end of the SIM ejector tool is sharp. Do not use pointed at yourself or other people.
May cause injuries or loss of sight, etc.

⚠ CAUTION

Don't

Do not store the equipment in extremely humid, dusty or hot areas.
May cause fire, burns, or electric shocks, etc.

Don't

Children using the equipment should be instructed in proper operation by an adult. Make sure they use the product correctly.
May cause accidentally swallowed, injuries or electric shocks, etc.

Don't

Don't store the equipment reach of small children.
Please be careful about the storage place of the small parts such as SIM ejector tool especially.
May cause accidentally swallowed, injuries or electric shocks, etc.

Don't

Do not leave the equipment on unstable or sloping surfaces.
May fall and cause injuries, etc.

Do

If you develop skin problems, stop using the phone immediately, and seek medical care.
Mobile phones can give some users skin problems such as itching, allergic reactions or rashes.
For parts materials
→ P.13 "Material list"

Handling precautions

General

■ **SC-56C is waterproof/dustproof, but do not allow liquids (drinking water, perspiration, sea water, pet urine, etc.) such as water, etc. or dust to seep into the terminal and do not allow accessories or optional devices to get wet or dusty.**
Adapter, nanoUIM card are not waterproof/dustproof. Do not use them in a humid place such as bathroom or in the rain. If you carry your terminal on your body, perspiration may corrode the internal parts of the terminal and cause malfunction. Note that malfunctions deemed to be caused by water are not covered by the warranty. For repair, refer to Warranty and After-Sales Service (P.139).

■ **Clean the terminal with a dry soft cloth (such as used for cleaning eyeglasses).**
- Rubbing it roughly may scratch the display.
- Drops of water or dirt left on the display may cause stains.
- If this terminal is wiped with alcohol, paint thinner, benzine or detergent, the printing may disappear or color may fade.

■ **Clean the jacks occasionally to use them in a clean state.**
If you use the jacks when they are soiled, they may not function correctly.
When cleaning, be careful not to damage the jacks, etc.

■ **Do not leave the terminal near the air conditioning vent.**
Extreme temperature changes may produce condensation and corrode the internal parts of the terminal, causing it to malfunction.

■ **Make sure to use the terminal, etc. without excessive force.**
If you put the terminal in a bag full of items or sit down with the terminal in the pocket of your clothes, it may damage parts such as display, internal circuit board or internal battery, etc. and cause the terminal to malfunction.
Also, while the external device is connected to the external connection jack, it may cause malfunction or damage.

■ **Use the optional equipment specified by NTT DOCOMO for the terminal.**
If you use products other than specified, it may cause malfunction or damage.

■ **Read the instruction manual supplied with optional devices.**

■ **Do not drop this terminal or subject it to shock.**
May cause malfunction or damage.

Terminal precautions

■ **Do not press display surface forcibly, or not operate with a sharp pointed objects.**
May hurt the screen and cause malfunction or damage.

■ **Do not use the terminal in extremely hot or cold places.**
Use the terminal within a temperature range of 0℃ to 35℃ and a humidity range of 0% to 95%.

■ **The terminal may affect home electronics (TVs or radios, etc.) in use nearby, so use it as far as possible from these appliances.**

■ **Keep the information that you registered in the terminal separately by backing up to microSD card, PC, cloud, etc. or noting down.**
Note that DOCOMO assumes no responsibility for any loss of saved data.

■ **Do not plug the connector of the external device into the external connection jack at the slant and pull it while connecting.**
May cause malfunction or damage.

■ **The terminal could become warm while in use and charging. This condition is not abnormal. This condition is not abnormal.**

■ **Do not leave the camera under direct sunlight.**
May cause discoloring or burn-in of materials.

■ **Usually, close the nanoUIM card/microSD card tray tightly.**
May cause let liquids (drinking water, perspiration, sea water, pet urine, etc.) or dust and cause malfunction.

■ **While microSD card is being used, do not take the card out and do not turn off the terminal.**
May cause data loss or malfunction.

■ **Do not let magnetic cards or magnetized objects come close to the terminal.**
The magnetic data in cash cards, credit cards, transportation IC card, etc. may be erased.
Putting a strong magnetism close to this terminal might cause false operation.

■ **Do not decorate the terminal with plastic film or stickers.**
Various functions that use the proximity sensor may not function correctly.
For position of Proximity sensor
→ P.21 "Part names and functions"

■ **As the internal battery is a consumable product, it is not covered by the warranty.**
The internal battery may swell as battery life gets closer depending on operating conditions. Even if you sufficiently recharge the terminal but usage time significantly decreases or the internal battery bulges, this means that the internal battery needs to be replaced. We takes the terminal to replace the parts as a chargeable service. Check "Warranty and After-Sales Service" (P.139) since the repair's reception desk will be taking care of the service.

■ **Charge the battery in an environment with the proper ambient temperature (5℃ to 35℃).**

■ **The operating time of the internal battery varies depending on the operating environment and the secular degradation of the internal battery.**

■ **When storing the terminal, do not store it under the following conditions as the performance and life of the internal battery may deteriorate if you do.**
- Keeping under the state of the full charge (right after the charging ends)
- Keeping under the state of empty charge (too exhausted to turn on the terminal)

Store the internal battery with about 40% battery charge remaining.

■ **The type of internal battery of this terminal is as follows.**

Viewing	Battery type
Li-ion 00	Li-ion battery

Adapter precautions

■ **Charge the battery in an environment with the proper ambient temperature (5℃ to 35℃).**

■ **Do not charge in the following places.**
- Places that is very humid, dusty or exposed to strong vibrations
- Near by home electronics (TVs or radios, etc.)

■ **The adapter could become warm while charging. This condition is not abnormal.**

■ **You can continue to use the terminal. When using the DC adapter for charging, keep the vehicle engine running.**
The vehicle's battery could become flat.

■ **When using an outlet with a mechanism preventing unplugging, follow the handling instructions for that outlet.**

■ Do not give a strong impact to the adapter. Also, do not deform the charging jack.
May cause malfunction.

nanoUIM card precautions

■ Do not use excessive force to attach/remove nanoUIM card.

■ Note that DOCOMO assumes no responsibility for malfunctions occurring as the result of inserting and using a nanoUIM card with another IC card reader/writer.

■ Clean the IC area occasionally to use it in a clean state.
If you use the IC area when it is soiled, the terminal may not function correctly.

■ Clean nanoUIM card with a soft, dry cloth (such as a cloth for eyeglasses).

■ Make a backup to microSD cards, PC, or cloud or maintain a separate record of the data you saved in nanoUIM card.
Note that DOCOMO assumes no responsibility for any loss of saved data.

■ To preserve the environment, bring the old nanoUIM card to a sales outlet such as docomo Shop.

■ Do not carelessly damage, contact, or short-circuit an IC.
May cause data loss or malfunction.

■ Do not drop nanoUIM card or subject it to shocks.
May cause malfunction.

■ Do not bend nanoUIM card or place heavy objects on it.
May cause malfunction.

■ Do not attach nanoUIM card to the terminal with a label or sticker put on nanoUIM card.
May cause malfunction.

Bluetooth function precautions

■ To secure the Bluetooth communication security, the terminal supports the security function compliant with Bluetooth standards, but the security may not be sufficient depending on the settings. Be aware of the communication using the Bluetooth function.

■ Note that DOCOMO is not responsible for data or information leak when making data communications using Bluetooth.

- **Frequency band**
The frequency band used by the terminal's Bluetooth function/Wi-Fi function is indicated on the battery storage section.

2.4	:	This radio equipment uses the 2400 MHz band.
FH/DS/OF/XX	:	Modulation scheme is FH-SS, DS-SS, OFDM or other scheme.
1	:	The estimated interference distance is 10 m or less.
4	:	The estimated interference distance is 40 m or less.
8	:	The estimated interference distance is 80 m or less.
	:	The full band between 2400 MHz and 2483.5 MHz is used and the band of the mobile identification device is unavoidable.

Available channels vary by the country.
For use in an aircraft, contact the airline beforehand.

- **Cautions on using Bluetooth devices**
The operating frequency band of the terminal is used by industrial, scientific, consumer and medical equipment including microwave ovens, premises radio stations for identifying mobile units used in the manufacturing lines of plants (radio stations requiring a license), specified low power radio stations (radio stations requiring no license) and amateur radio stations (hereinafter referred to as "another station").
1. Before using the terminal, confirm that "another station" is not being operated nearby.
2. In the event of the terminal causing harmful radio wave interference with "another station", promptly change the operating frequency or stop radio wave emission by "turning off the power", etc.
3. If you have further questions, contact "General Inquiries" provided on the last page of this manual.

Wireless LAN (WLAN) precautions

■ **Wireless LAN (WLAN) uses radio waves to enable communications between compatible devices, thus allowing connection to a local area network from anywhere within the range. On the other hand, there is a risk of data interception, etc. by third party unless security is established. It is recommended to set the security settings on your own responsibility.**

■ **We cannot assume the responsibility even if leakage of data and information occurs at the time of communication using wireless LAN function.**

- **Wireless LAN**
  Do not use wireless LAN near magnetic devices such as electrical appliances or AV/OA devices, or in radio waves.
  - Magnetism or radio waves may increase noises or disable communications, etc. (especially when using a microwave oven).
  - When used near TV, radio, etc., reception interference may occur, or channels on the TV screen may be disturbed, etc.
  - If there are multiple wireless LAN access points nearby and the same channel is used, search may not work correctly.
  - For using WLAN overseas, point of use etc. may be restricted depending on country. In that case, confirm conditions such as available frequency or regulations of the country to use it.

- **Cautions on using 2.4 GHz devices**
  The operating frequency band of the WLAN device is used by home electric appliances such as microwave oven, industrial, scientific, and medical equipment including premises radio stations for identifying mobile units used in the manufacturing lines of plants (radio stations requiring a license), specified low power radio stations (radio stations requiring no license) and amateur radio stations (radio stations requiring a license).
  1. Before using the device, confirm that premises radio stations for identifying mobile units, specified low power radio stations and amateur radio stations are not being operated nearby.
  2. If the device causes harmful radio interference to premises radio stations for identifying mobile units, immediately change the frequency band or stop use, and contact "General Inquiries" described on the last page of this manual for crosstalk avoidance, etc. (e.g. partition setup).
  3. If the device causes radio interference to specified low power radio stations or amateur radio stations, contact "General Inquiries" described on the last page of this manual.

- **Cautions on using 5 GHz devices**
  The terminal can use 3 frequency bands of 5.2 GHz band (W52), 5.3 GHz band (W53), 5.6 GHz band (W56).
  - 5.2 GHz band (W52/36, 40, 44, 48ch)
  - 5.3GHz band (W53/52, 56, 60, 64ch)
  - 5.6 GHz band (W56/100, 104, 108, 112, 116, 120, 124, 128, 132, 136, 140, 144ch)

  Using the 5.2 GHz band/5.3 GHz band wireless LAN outdoors is prohibited by Law (except when communicating with access point of 5.2 GHz high-output data communication system or relay station).

FeliCa and NFC reader/writer precautions

■ **FeliCa and NFC reader/writer function of the terminal uses weak waves requiring no licenses for radio stations.**

■ **It uses 13.56 MHz frequency band. When someone uses other FeliCa and NFC reader/writer function in your surroundings, keep the terminal away sufficiently from them.**
Before using the reader/ writer, confirm that there are no radio stations using the same frequency band nearby.

■ **For use in an aircraft, contact the airline beforehand. In some countries, use may be restricted.**
Confirm regulations etc. for the country/area before using.

Samples (SIM ejector tool) precautions

■ **Do not apply excessive force to the SIM ejection tool when using it.**
May cause malfunction or damage.

■ **Do not insert the SIM ejector tool into any hole other than the nanoUIM card/microSD card tray eject hole.**
May cause malfunction or damage.

■ **When disposing of it, follow the rules regarding disposal in your area.**

■ **Do not use the SIM ejector tool with other mobile devices.**
May cause malfunction or damage to the terminal.

NOTE

■ **Do not deform the terminal. Using an altered device is a violation of the Radio Law/Telecommunications Business Act.**
The terminal is compliant with rules on the technical standard conformance of specified wireless equipment based on the Radio Law/Telecommunications Business Act. As proof of this, the "Technical Compliance Mark ⓣ" is depicted in the electronic faceplate. The electronic faceplate can be confirmed by operating this terminal as follows.
From the Home screen, ⊞ →"Settings" → "About phone" → "Regulatory information"
If you remove the screws and alter the inside of the terminal, the technical regulations compliance certification becomes invalid. Do not use the terminal with the certification invalid, as it is a violation of the Radio Law and Telecommunications Business Act.

■ **Be careful when using the terminal while driving.**
Except for situations which are stipulated as per laws and regulations, the looking at the terminal's screen, or the holding of the terminal in one's hands and conversing while driving shall be subject to penalty.

■ **FeliCa and NFC reader/writer function of the terminal complies with the wireless standards in Japan.**
When using overseas, confirm in advance the stipulations of the laws and regulations of the nation/region.

■ **Do not modify the basic software illegally.**
It may be regarded as modifications and repair may be refused.

Waterproofness/Dustproofness

The terminal provides waterproofness of IPX5[*1], IPX8[*2] and dustproofness of IP6X[*3] with firmly attaching the nanoUIM card/microSD card slot.

*1 IPX5 means that a phone keeps functioning after applying a jet flow of 12.5 L/min. from every direction from a distance of approximately 3 m for at least 3 minutes using water nozzle in 6.3 mm inner diameter.
*2 IPX8 means that a communication device keeps functioning after a phone is slowly submerged to depth of 1.5 m in static tap water at ordinary temperatures, left there for 30 minutes and then taken out.
*3 IP6X means a protection degree that dust cannot come in to that do inside of phone and a phone maintains safety after it is placed in a phone with dust in diameter 75 μm or less for 8 hours, agitated and then taken out.

What you can do with waterproofness of the terminal

■ **You can talk without an umbrella in the rain (for rainfall of 20 mm or less per hour).**

■ **The terminal can be washed with tap water at ordinary temperatures.**
- Do not apply water flow stronger than allowed (P.18).
- Do not use brush, sponge, soap, detergent, etc.
- If mud or soil is adhered to the terminal, eliminate the dirt first by shaking several times in tap water of wash-basin and then wash the terminal with running water.
- Drain water in the specified steps (P.20) after washing.
- Do not wash rubbing strongly.

To ensure waterproofness/dustproofness

■ **To avoid water/dust ingress, be sure to observe the following points.**
- Do not apply liquids except for tap water at ordinary temperatures.
- Do not poke mouthpiece/microphone, receiver, speaker, USB Type-C connection jack, headphone connection jack with a sharp object.
- Do not let the terminal fall. It may become scratched causing the waterproof/dustproof performance to degrade.
- Make sure that the nanoUIM card/microSD card tray is tightly closed. Even a fine debris (a piece of hair, a grain of sand, fine fiber, etc.) between contact surfaces may allow water or dust to enter the interior of the terminal.

To keep the terminal waterproofness/dustproofness, replacement of parts is required every 2 years regardless of whether the terminal appears normal or abnormal. DOCOMO takes the terminal to replace the parts as a chargeable service. Bring the terminal to a sales outlet such as a DOCOMO-specified repair place. Please see the last page of this manual for contact information.

Important precautions

Do not perform actions shown in the illustrations below.

〈Example〉

Attaching Soap/ Detergent/ Bath powder | Soaking in ocean water | Using in hot spring | Attaching sand/mud

Observe the following precautions to use the terminal properly.

- Accessories and optional devices are not waterproof/dustproof.
- Do not apply water flow stronger than allowed (P.18). Even if the terminal is waterproof in IPX5 waterproof, water may enter inside from a damaged section and cause troubles such as electric shocks or corrosion of the battery.
- If the terminal gets wet with salt water, sea water, refreshing beverage, etc. or mud or soil adhered, wash it immediately. If they dry out, it is hard to remove the dirt and it may cause damage or malfunction.
- Do not put the terminal in hot water, use it in a sauna or apply hot airflow (from a hair dryer etc.) to it.
- Do not move the terminal in water or slam the terminal against the surface of water.
- The terminal does not float on water.
- Do not leave water droplets adhering to the terminal. They will freeze in cold regions, and that may cause malfunctions.
- Do not leave water on the mouthpiece/ microphone, receiver or speaker, etc. Such water may interfere with talking.
- If liquid such as water is splashed on the terminal while the nanoUIM card/microSD card tray is open, the liquid may enter the terminal interior and may cause electric shock, malfunction, etc. Do not continue using the terminal and immediately switch off the terminal. For details, contact the inquiries on the last page of this manual.
- When a water droplet is attached to the terminal or when your hands are wet, please do not attach/remove the nanoUIM card/microSD card tray.

DOCOMO does not guarantee actual operations under all states. Malfunctions deemed to be caused by inappropriate operation by the customer are not covered by the warranty.

Draining water

When the terminal is wet, water may flow out after wiping it off. Drain the water in the following steps.

■ Draining water of the terminal

① Hold the terminal firmly and wipe off moisture on the terminal surface and back side with dry, clean cloth, etc.

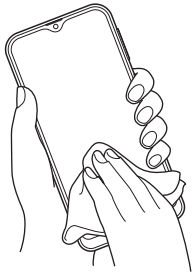

② Shake the terminal approximately 20 times, firmly holding it, until there is no more water splattering.

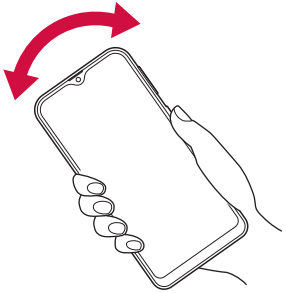

③ Swing the terminal about 10 times against a dry, clean cloth, etc. to wipe off water remaining in mouthpiece/microphone, receiver, speaker, USB Type-C connection jack, headphone connection jack, keys, etc.

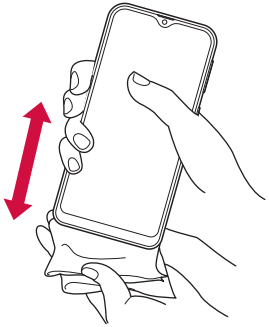

④ Wipe off water drained from the terminal with dry, clean cloth etc., and dry naturally.
- Water, if any, remaining in the terminal may ooze up after wiping off.
- Do not wipe off water remaining in gaps directly with a cotton swab, etc.

Charging

Check the following before and after charging.

- Never try to charge when the terminal is wet.
- If you want to charge after the terminal gets wet, let the natural wiped dry enough water in such a clean, dry cloth with the water drain well, please be connected to the USB Type-C connection jack.
- Do not use the AC adapter in a bathroom, shower room, kitchen, lavatory or water-related area. It may cause fire or electric shock.
- Do not touch the AC adapter with wet hands. It may cause electric shock.

Getting started

Part names and functions

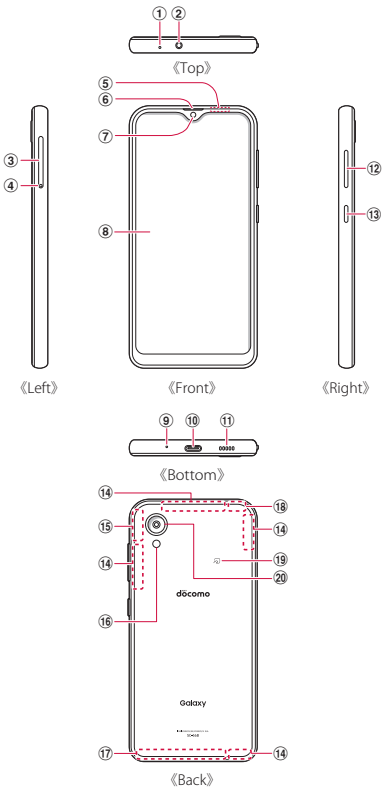

① Mouthpiece/Microphone (upper)
② Headphone connection jack
③ nanoUIM card/microSD card tray (P.22)
④ nanoUIM card/microSD card tray eject hole
⑤ **Proximity sensor**[*1]**:** Detect face closeness during a call and prevent the erroneous operation or use to control display brightness automatically.
⑥ Receiver
⑦ Front camera[*2] (P.77)
⑧ Display (touch screen) (P.33)
⑨ Mouthpiece/Microphone (lower)
⑩ **USB Type-C connection terminal:** It used for charging, etc. It supports USB Power Delivery.
⑪ Speaker[*3]
⑫ **Volume UP key/Volume DOWN key:** This key is used to control the volume for various apps, take a picture or video and set manner mode, etc.
⑬ **Side key (P.30, P.35):** This key is used lights the power and screen on and off. Press and hold over a second this key to display the menu, you can do power off, restart, turning ON/OFF of Emergency mode and setting of the side key.
⑭ 5G/LTE antenna[*4]
⑮ 5G/LTE/GPS antenna[*4]
⑯ Flash/Light
⑰ LTE antenna[*4]
⑱ Wi-Fi/Bluetooth antenna[*4]
⑲ Mark (P.87)
⑳ Rear camera (P.77)

*1 Do not cover around the sensor with your hand and put stickers on any sensor area. May cause not work normally.
*2 It is also used to automatically control the screen brightness.
*3 Be careful not to place your ear too close to the speaker when you use it to play music and output other sound.
*4 It is a built-in. Covering it by hand may affect the quality of communications.

Information

- The back cover cannot be removed. Attempting to remove the back cover with excessive force may cause damage or malfunction.
- The terminal's battery is built-in and you cannot replace it yourself.
- Be careful not to expose the camera lens to a strong light source, such as direct sunlight. If the camera lens is exposed to a strong light source, such as direct sunlight, the camera image sensor may be damaged. A damaged image sensor is irreparable and will cause dots, etc. in pictures.

nanoUIM card

The nanoUIM card is an IC card storing user information such as phone numbers.

- Only nanoUIM card is available for the terminal. If you have a docomo miniUIM card, docomo UIM card or FOMA card, bring it to docomo Shop to replace.
- If nanoUIM card is not inserted, you cannot use functions such as calling, sending/receiving SMS, packet communication.
- In Japan, calls to emergency telephone numbers (110, 119, 118) cannot be made if nanoUIM card is not installed.
- For details on handling nanoUIM card, refer to NTT DOCOMO website.

Security codes of nanoUIM card

The nanoUIM card has security code, named PIN code (P.32).

Attaching/Removing nanoUIM card

- The included SIM ejector tool (sample) is required to attach/remove nanoUIM card.
- Turn off this terminal before attaching/removing the nanoUIM card.

Attaching nanoUIM card

1 **Insert the tip of the SIM ejector tool into the nanoUIM card/microSD card tray eject hole horizontally**

The nanoUIM card/microSD card tray will slightly eject.

- Not inserting the tool in a straight line might result in damage or a fault.

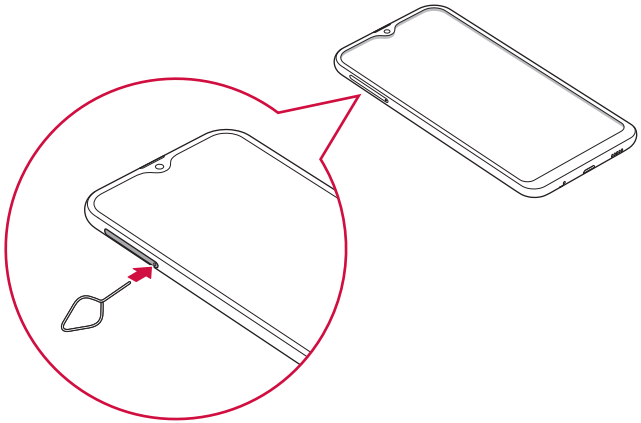

2 **Pull out the nanoUIM card/microSD card tray in a straight line**

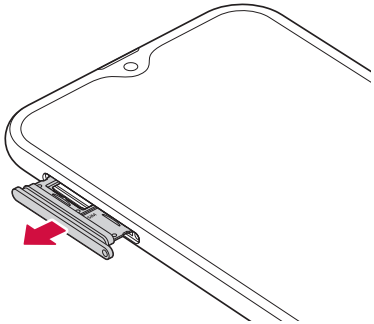

3 **Place the IC face of the nanoUIM card face down on the nanoUIM card tray**

- Fit the nanoUIM card securely into the nanoUIM card/microSD card tray.

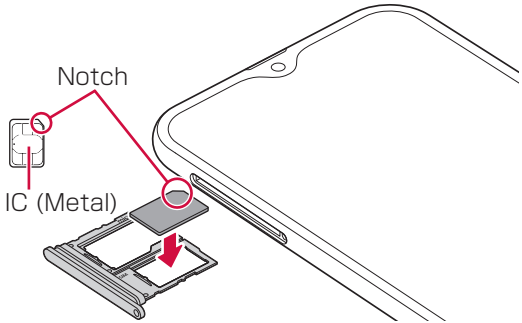

4 Insert the nanoUIM card/microSD card tray into the terminal

- Take care to insert the nanoUIM card/microSD card tray in the correct direction. If the direction you insert the nanoUIM card/microSD card tray is incorrect, it may be damaged.

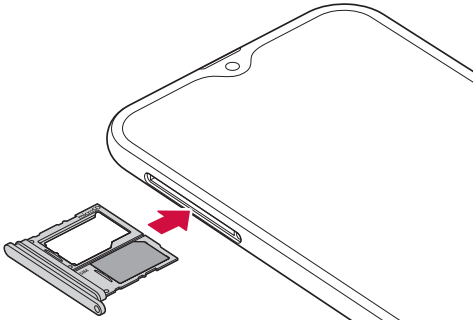

Removing nanoUIM card

1 Insert the tip of the SIM ejector tool into the nanoUIM card/microSD card tray eject hole horizontally (P.23)

The nanoUIM card/microSD card tray will slightly eject.

- Not inserting the tool in a straight line might result in damage or a fault.

2 Pull out the nanoUIM card/microSD card tray in a straight line

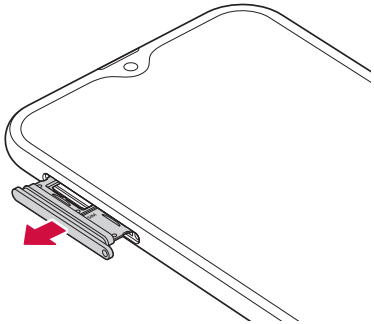

3 Remove the nanoUIM card from the nanoUIM card/microSD card tray

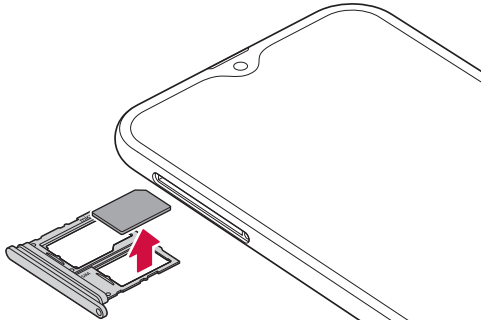

4 Insert the nanoUIM card/microSD card tray into the terminal

- Take care to insert the nanoUIM card/microSD card tray in the correct direction. If the direction you insert the nanoUIM card/microSD card tray is incorrect, it may be damaged.

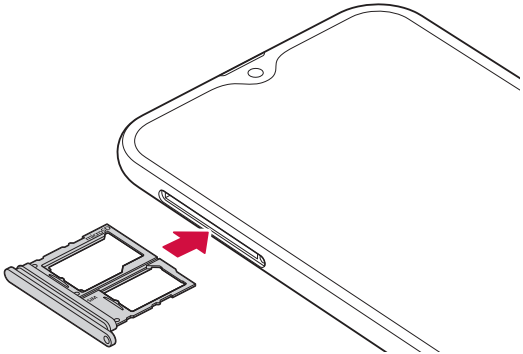

Information

- For handling the nanoUIM card, take care not to touch or scratch the IC.
- Attaching or removing forcibly may damage the nanoUIM card.
- Be careful not to lose the removed nanoUIM card.
- If you lost the SIM ejector tool, you can use a paper clip instead.

  Example of a paper clip

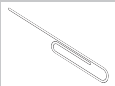

microSD card

You can attach microSD card (including microSDHC card and microSDXC card) to the terminal and use it.

- The terminal supports microSD cards of up to 2 GB, microSDHC cards of up to 32 GB and microSDXC cards of up to 1 TB (as of October, 2021). However, the operations of all commercially sold microSD cards are not guaranteed.
  For compatible microSD cards, contact each manufacturer of microSD cards.
- The terminal supports up to Class 10 speed microSD cards, the UHS speed class is Class 3. However, speed class is the performance of microSD card and does not guarantee all the operation of speed class performance.
- microSDXC card can be used only with SDXC compatible devices.
  As the data saved in the microSDXC card may damage, do not insert microSDXC card into a device incompatible with SDXC.
- To use microSDXC card with the data damaged again, formatting the microSDXC card with SDXC compatible device is needed (All data is erased).
- To copy data to/from SDXC incompatible device, use memory card compatible with the standard of device for copying to/from such as microSDHC card or microSD card.
- The saved data to the microSD card from other devices may not be displayed or played on this terminal. Also, the saved data to the microSD card from the terminal may not be displayed or played on other devices.

Attaching/Removing microSD card

- The included SIM ejector tool (sample) is required to attach/remove microSD card.
- Turn off this terminal before inserting/removing microSD card.

Attaching microSD card

1 Insert the tip of the SIM ejector tool into the nanoUIM card/microSD card tray eject hole horizontally

The nanoUIM card/microSD card tray will slightly eject.

- Not inserting the tool in a straight line might result in damage or a fault.

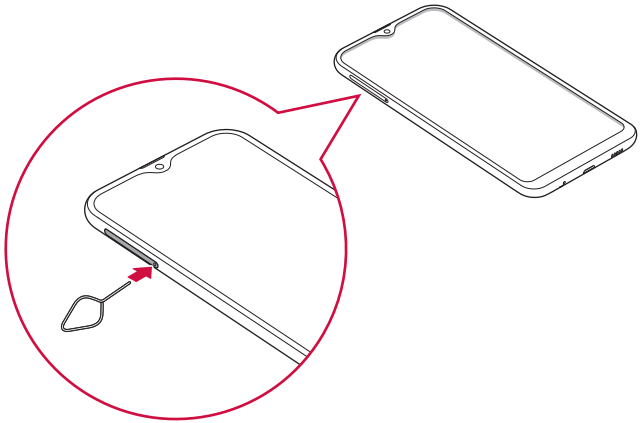

2 Pull out the nanoUIM card/microSD card tray in a straight line

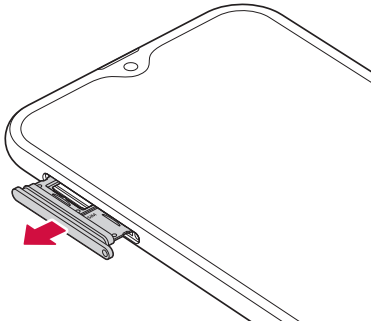

3 Place metal contacts of the microSD card face down on the nanoUIM card/microSD card tray

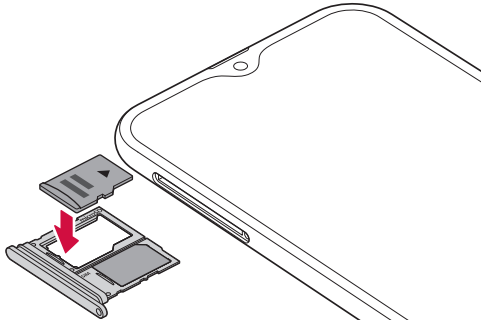

4 Insert the nanoUIM card/microSD card tray into the terminal

- Take care to insert the nanoUIM card/microSD card tray in the correct direction. If the direction you insert the nanoUIM card/microSD card tray is incorrect, it may be damaged.

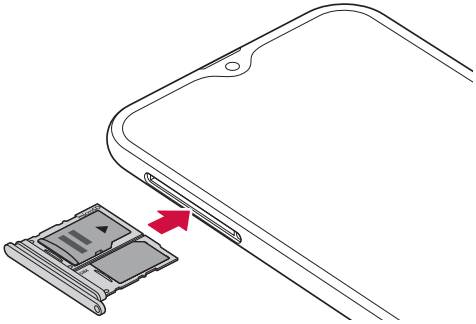

Removing microSD card

1 Insert the tip of the SIM ejector tool into the nanoUIM card/microSD card tray eject hole horizontally (P.26)

The nanoUIM card/microSD card tray will slightly eject.

- Not inserting the tool in a straight line might result in damage or a fault.

2 Pull out the nanoUIM card/microSD card tray in a straight line

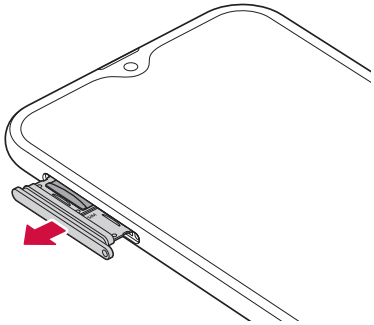

3 Remove the microSD card from the nanoUIM card/microSD card tray

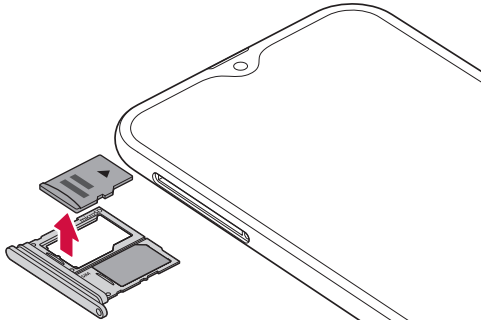

4 Insert the nanoUIM card/microSD card tray into the terminal

- Take care to insert the nanoUIM card/microSD card tray in the correct direction. If the direction you insert the nanoUIM card/microSD card tray is incorrect, it may be damaged.

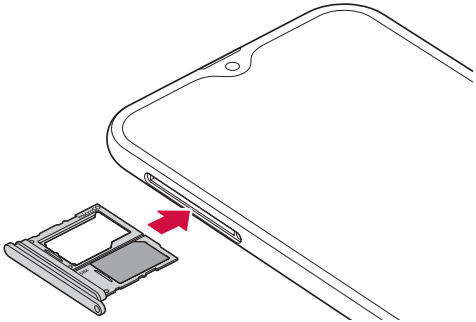

Information

- If you lost the SIM ejector tool, you can use a paper clip instead.
  Example of a paper clip

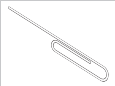

Formatting microSD card

Note that formatting microSD card erases all data in a microSD card.

1 From the Home screen, ⊞ → "Settings" → "Battery and device care"

2 "Storage" → ⋮ → "Advanced"

3 "SD card" → "Format" → "Format SD card" → "Done"

Charging

Internal battery life

- The internal battery is a consumable accessory. Each time it is charged, time available with each charging reduces.
- Using apps, etc. while charging the internal battery for a long time may shorten the battery life.
- When a time available with each charging is reduced to about a half from that of a new battery, replacement of the battery is recommended because it is near the end of life.

Charging

- AC Adapter 08 (sold separately) is applicable to the range of 100 VAC and 240 VAC.
- For details of AC Adapter 08, see respective manuals.
- The AC adapter has a plug dedicated to 100 VAC (for domestic use). When using the AC adapter in the range of AC 100V and 240V overseas, a conversion plug adapter applicable to the country you are staying is required. Do not charge the battery using a transformer for overseas travel.
- When the terminal is turned ON, you can operate the terminal even while charging. However, in that case, charging takes longer time because of reducing charging volume.
- When inserting/removing the connector, make sure not to put excessive force.
- You can check the latest charger with the terminal in the DOCOMO online shop.
  https://onlineshop.smt.docomo.ne.jp/options/search.html (In Japanese only)

Estimate internal battery operating time

- The operating time of the internal battery varies depending on the operating environment and the degradation level of the internal battery, etc. For estimate of operating time, see "Main specifications" (P.141).

Estimate internal battery charging time

- For estimate of charging time, see "Main specifications" (P.141).

Information

- If you see ⚠ and "Check BATTERY" when charging, please contact the Galaxy Customer Support Center.

Charging the terminal

Charging with the AC adapter

Charging using AC Adapter 08 (sold separately) is explained here.

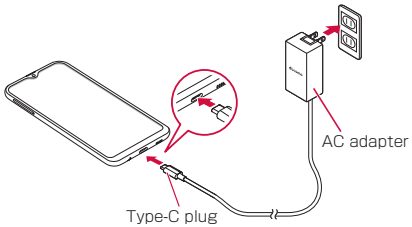

1. Insert the Type-C plug of AC adapter horizontally into the USB Type-C connection jack of the terminal
2. Turn up and insert the power plug of AC adapter to the outlet
3. When charging is completed, pull out the power plug of AC adapter from the outlet
4. Pull out the Type-C plug of AC adapter from the terminal horizontally

Charging with the DC adapter

The DC Adapter 05 (sold separately) supplies power to charge this terminal through a accessory socket (12 V/24 V) in a vehicle.
When using DC Adapter 05, USB cable A to C 02 (sold separately) is required.
For details, refer to manuals of DC adapter and USB cable A to C.

Using Fast Charging

You can charge the terminal more quickly.

- To use the fast charging feature, need a battery charger that supports these features. You cannot use these features using a standard battery charger.
- If the terminal becomes hot, charging speed may decrease or stop.
- You can charge the battery more quickly while the device or its screen is turned off.

1. From the Home screen, ⊞ → "Settings" → "Battery and device care"
2. "Battery" → "More battery settings" → "Fast charging"

Charging with USB cable A to C

You can charge the terminal with a PC by connecting it to a PC using a USB cable A to C 02 (sold separately).

- For connection to a PC, see "Connecting with USB cable A to C" (P.124).
- When you perform USB connection with a PC, popup screen may appear on the PC. If you just want to charge the terminal without synchronizing to the PC, select "キャンセル (Cancel)".
- Depending on the terminal condition, it may take time for charging, or may not be charged.

Turning power ON/OFF

Turning power ON

1 Press [] [Side key] for 2 seconds or longer
- The starting screen appears, and then the lock screen appears.
- When you turn the power on for the first time, make the initial settings following to the onscreen instructions (P.31).

2 Swipe the screen

Turning power OFF

1 Press [] [Side key] for 1 second or longer

2 "Power off" → "Power off"
- The terminal vibrates and power turns off.

Setting/Canceling screen lock

You can set the screen lock to prevent the erroneous operation of the touch screen or keys.
- When the display is turned off with "Screen timeout" (P.103) set, the screen lock activates automatically after a while the screen disappears.

Setting screen lock

1 Press [] [Side key]
- The display turns off and the screen lock is set.

Canceling screen lock

1 Press [] [Side key] during the screen lock
- Lock screen appears.

2 Swipe the screen

Lock screen

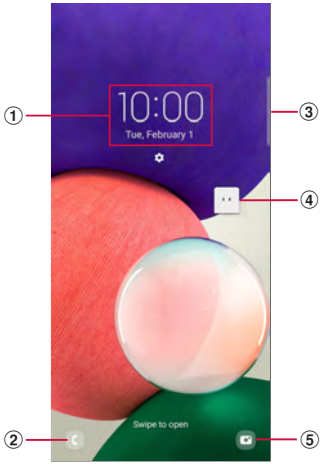

Lock screen (example)

① Clock widget
② Dial activating button
③ Edge panel handle
- Swipe to the center of screen, edge panel is displayed (P.50).

④ Machi-chara (e.g. my daiz)
- Notify you of information such as mail reception or incoming call.

⑤ Camera activating button

Information
- When notification information for missed calls or others arrives during the screen lock, the notification information may be displayed on the lock screen.
- You can change the unlock method of the screen lock (P.106).

Initial settings

When the Welcome screen is displayed after you turn the terminal ON, follow the onscreen instructions to make settings for language, Google/Galaxy account, etc. and initial setting for docomo service. Operation steps may vary depending on connection to network, omitting the setting, etc.

1 Tap "Start" of "Welcome!" screen
- To change the language, tap "日本語 (Japanese)".
- If you change accessibility, tap "Accessibility" to set it.
- From here on follow the onscreen instructions to configure the following;
  - A few legal items to review
  - Choose a Wi-Fi network
  - Copy apps & data
  - Google Sign in with your Google Account
  - Google Services
  - Protect your phone

2 When the initial setup screen of docomo is display, "Next"
- From here on follow the onscreen instructions to configure the following;
  - d ACCOUNT
  - Safety and ease of use
  - docomo cloud

3 Set Galaxy account

4 Set change home → "Next"

5 "Finish"
- Follow the onscreen instructions to display the Home screen.

Information
- Some functions can be changed after you have set them up.
- Before setting up online services, check that the terminal can transmit data (5G/4G/3G/GSM) or that the terminal is connected to a Wi-Fi network.
- While you can use the terminal without setting up a Google account, Google services, such as Gmail and Google Play, cannot be used.

Set Google account

Google account is user name/password to use Google services. By setting Google account to the terminal, you can use Gmail to send Email, use Google Play to download apps or contents such as games.

1 From the Home screen, ⊞ → "Settings" → "Accounts and backup" → "Manage accounts" → "Add account"

2 "Google"

3 Follow the onscreen instructions

Set d ACCOUNT

d ACCOUNT is an ID/password to use services provided by DOCOMO such as d POINT, dmarket, etc. with smartphone, tablet, PC, etc.

1 From the Home screen, ⊞ → "Settings" → "docomo service/cloud"

2 "d ACCOUNT setting"

3 Follow the onscreen instructions

Set Galaxy account

If the Galaxy account is set, use Find My Mobile to remotely control the terminal, and the data between the terminal and the Galaxy account can be synchronized.

1 From the Home screen, ⊞ → "Settings" → "Accounts and backup" → "Manage accounts" → "Add account"

2 "Galaxy account"

3 Follow the onscreen instructions

Information
- For details on Find My Mobile, refer to the following website. https://findmymobile.samsung.com/(In Japanese only)
- Make sure to note down, etc., the password you set when registering a Galaxy account not to forget it. If you forget your password, Tap "Find ID" or "Help" → "Forgot your ID or password?", follow the onscreen instructions.

Security codes used on the terminal

Some functions provided for convenient use of the terminal require the security code to use them. Besides a password for screen lock of the terminal, a network security code necessary for the network services, etc. are available. Make use of the terminal using an appropriate security code according to the purpose.

- Entered PIN/password for screen lock, network security code, PIN code and PUK code are shown as "●".

Notes on the security codes

- Avoid using a number that is easy to guess, such as "birth date", "part of your phone number", "street address number or room number", "1111", and "1234". Make sure to make a note of the security code you set lest you should forget it.
- Be very careful not to let others know your security code. If your security code is known by anyone else, DOCOMO shall have no liability for any loss due to any unauthorized use of it.
- If you forget security codes, you should bring your official identification (such as driver's license), the terminal, and nanoUIM card with you to the nearest docomo Shop. For details, contact the "General Inquiries" on the last page of this manual.
- The PUK code is written on the subscription form (copy for customer) handed at the subscription in the docomo Shop. If you contract other than docomo shop, contact the "General Inquiries" on the last page of this manual.

■ PIN/password for screen lock

The security code is used for lock function of the terminal.

■ Network security code

The network security code is a 4-digit number necessary for identification at reception of your request in docomo Shop, docomo Information Center or "お客様サポート (Customer support)", or using the docomo Network Services. It can be set any number at the subscription and also changed later by yourself.
For details on Network security code, refer to NTT DOCOMO website.

■ PIN code

You can set security code, named PIN, for the nanoUIM card. This code are set to "0000" at the time of subscription. They can be changed by yourself.
PIN is a 4- to 8-digit number (code) that must be entered for user confirmation to prevent unauthorized use of nanoUIM card by a third party every time you insert the nanoUIM card into the terminal or when the terminal is powered on. You can set entering the PIN code enables making/receiving calls and terminal operations.

- If you use newly purchased the terminal with the nanoUIM card you used inserted, use the set PIN code on the former terminal.
- If you enter a incorrect PIN code 3 consecutive times, the PIN code is locked and you cannot use the code. In this case, enter "PIN Unblocking Key" (PUK) to unlock and then set PIN code again.
  Enter PUK (8 digits) → "OK" → enter a new PIN code → "OK" → enter the PIN code again → "OK".

■ PUK code

The PUK code is an 8-digit number for canceling the locked PIN code.
The PUK code cannot be changed by yourself.

- If you enter a incorrect PUK code 10 consecutive times, the nanoUIM card is locked. If it locked, contact Inquiries provided on the last page of this manual.

Setting PIN code

You can set to require the PIN code entry for using the terminal when the power is turned on.

1 From the Home screen, ⊞ → "Settings" → "Biometrics and security" → "Other security settings" → "Setup SIM card lock"

2 "Lock SIM card" → Enter PIN → "OK"

- "Lock SIM card" turns ON.

Changing PIN code

When "Lock SIM card" (P.32) is set, you can change the PIN code.

1 From the Home screen, ⊞ → "Settings" → "Biometrics and security" → "Other security settings" → "Setup SIM card lock"

2 "Change SIM card PIN" → Enter the current PIN code and a new PIN code according to the onscreen instructions

Basic Operation

Basic Operation

You can operate the terminal variously with touch screen and motions.

- Do not contact the touch screen with electric materials or metallic materials. The terminal might not operate well due to static electricity.
- The touch screen might not operate when you use the terminal during charging. In that case, remove the terminal from the charger.
- Do not cover the antenna section with your hand when operating the terminal while holding it.

Using touch screen

Notes on using the touch screen

- The touch screen is designed for being touched lightly with fingers. Do not push it forcibly with a finger or press it with sharp objects (a nail, ballpoint pen, pin etc.).
- The touch screen may not work in the following cases. Note that it may cause malfunction.
  - Operation with gloved hands
  - Operation with tip of fingernail
  - Operation with a foreign object on the display
  - Operation with protective sheet or seal, etc. on the display
  - Operation when the touch screen is wet
  - Operation when your finger is wet from sweat or water, etc.
  - Operating in water

You can operate the touch screen (display) of the terminal by directly touching with your finger. In this manual, main operations are described as follows.

Tap/Double-tap

Touch a displayed item or icon lightly with your finger to select/perform (Tap).
Tap twice quickly on a displayed image or web page to zoom in/out the contents (Double-tap).

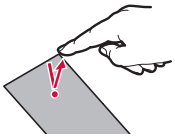

Touch and hold

Touch and hold a displayed content or item with your finger for 1 second or longer to display menu, etc.

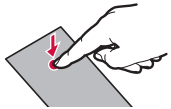

Drag

With touching with your finger, move a displayed item or icon.

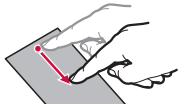

Swipe

Lightly move your finger across the surface of the screen.

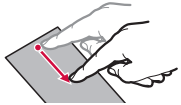

Scroll

With touching a displayed content with your finger, move it up/down/right/left or switch the views.

Flick

With touching the displayed content with your finger, quickly move it up/down/right/left and release it to scroll the content.

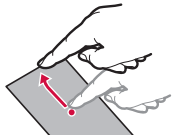

■ Pinch out/Pinch in

With touching a displayed image or web page with your two fingers, widen (pinch out) or narrow (pinch in) the distance to zoom in/out the content.

Using navigation bar

Icons for operating the screen are displayed at the bottom of the screen on the navigation bar. The names and functions of the icons are described below.

	History button Tap to display the most recently used apps.
	Home button The Home screen appears. Touch and hold to launch the Google assistant.
	Back button The screen returns to the previous screen. It also closes pop-up screen, option menus and the notification panel. It can also quit some apps.

Information

- From the Home screen, → "Settings" → "Display" → "Navigation bar" to set of navigation bar, the order of the button, etc. Set "Navigation type" to "Swipe gestures", hide navigation bar and be able to use screen space widely.
- From the Home screen, → "Settings" → "Apps" → "Choose default apps" → "Digital assistant app" → "Device assistance app", select the app booting when touching and holding [Home button].

Switching the orientation of the display automatically

Motion sensor which detects the terminal orientation (vertical/horizontal) and tilt can switch the screen view automatically.

1 Open the Notification panel (P.40)

2

Information

- Home screen or some functions may not automatically switch the view orientation.

Saving display content as image

Save screen content as image (screen capture).

1 Display a screen you want to save as an image

2 Press [] [Side key] and Volume DOWN key at the same time

Information

- Screen capture may not be available for some apps.
- Captured images are saved in JPG format, and you can check them in "Gallery"/"Photos" app.
- When set → "Settings" → "Advanced features" → "Screenshots" → "Screenshot toolbar" to ON on the Home screen , menu is displayed after screen capture. Tap (Scroll capture) from displayed menu to capture the area that is able to display by scrolling as one image. Turning on "Delete shared screenshots" automatically deletes the screen capture after you share it.

Enabling Emergency mode

Enabling Emergency mode to reduce battery consumption.

1 Press [] [Side key] for 1 second or longer

2 "Emergency mode" → Confirm the note and mark the checkbox → "Agree" → "Turn on"

- You can use the app to display.
- Tap "Emergency contacts" to register Emergency medical information, etc.

Information

- Tap ⋮ on the Emergency mode screen to operate the following.
  - "Turn off Emergency mode": Disable the Emergency mode.
  - "Edit": You can add and edit the app. Tap the app sticked to ⊖ to delete → "Done" to delete the app on the Home screen.
  - "Emergency contacts": to register Emergency medical information, etc.
  - "Settings": You can set Wi-Fi or Bluetooth to ON again or change the volume settings.
- Press and hold [] [Side key] for 1 second or longer and tap "Emergency mode" to disable Emergency mode.
- Enabling Emergency mode restricts part of functions. In addition, available functions for apps may be limited.
- The Internet app consumes a lot of battery even in Emergency mode.
- Disabling Emergency mode may hide some widgets on the Home screen and may need to reallocate them.

Advanced features

Using Advanced features

Moving the terminal performs the following operations.

- This feature may not be available for some other apps.
- Before using advanced features, from the Home screen, ⊞ →"Settings" → "Advanced features" → turn on Advanced features you want to use.

■ Continue apps on other devices

You can take over and use the app on other devices that are signed in with the same Wi-Fi network and Galaxy account.

■ Link to Windows

Set whether to link the terminal to a PC when it is connected (P.125).
* You must sign in Microsoft account to use this feature.

■ Android Auto

You can use Android Auto.

■ Quick Share

You can set whether to send the file from nearby users.

■ Side key

You can also set behavior by pressing the [] [Side key] twice.

■ Motions and gestures

→ P.36

■ One-handed mode

If you turn on "One-handed mode" and select "Gesture" under Reduce display size with, you can reduce the display size by swiping downwards on the bottom center of the screen. If you select "Button", you can press the Home button twice quickly to reduce the display size.

■ Screenshots

Set about screenshots (P.34).

■ Show contacts when sharing content

Share the contents directly with specific people from the share panel.

■ Game Launcher

Set "Game Launcher" to ON, the icon of "Game Launcher" is displayed and you can manage all games automatically on "Game Launcher" app (P.55).

■ Dual Messenger

The same app can be used with different accounts.
A second app icon will be displayed on the Home screen.
Only apps displayed on the Dual Messenger screen are available with Dual Messenger.

■ Send SOS messages
Set whether to send SOS message.

Information

- The way to use the same app on multiple accounts with Dual Messenger differs depending on the app.
- To delete the second Dual Messenger app, tap → "Uninstall" of the app that you want to delete on the Dual Messenger screen. Also If you delete first (Main) app, second app is deleted.

Motions and gestures

■ Lift to wake
Turn on the screen when you pick up your terminal.

■ Double tap to turn off screen
Set whether to turn off the screen when you double tap it.

■ Keep screen on while viewing
Set screen to keep displaying when the terminal detects the screen is seen.

■ Alert when phone picked up
If you pick up the terminal when there are missed calls and the screen turns off, the terminal vibrates to notify.

Information

- If excessive movement (shakiness, impact, etc.) is given to the terminal, Motion may not function correctly because of sensor characteristic.
- If you wear dark color glove or perform gesture operation out of the sensor recognition range, advanced features may not function correctly because of sensor characteristic.

Character entry

To enter characters, tap the character entry field and display the keyboard (Galaxy keyboard) then tap a key of the keyboard.

Information

- Use Google voice typing to enter characters by voice sound.
- Depending on usage condition, the display or operation of each keyboard may differ or the dedicated keyboard for the app or function you use may appear.

Switching keyboard types (input method)

1 of navigation bar while displaying the keyboard

2 Tap a input method you want to use

Information

- To switch show/hide of on the navigation bar, from the Home screen, tap → "Settings" → "General management" → "Keyboard list and default" → "Show Keyboard button" of "Default keyboard" to ON/OFF.

Selecting the type of keyboard

1 During the keyboard is displaying,

2 "Languages and types" → Select input language

3 Select keyboard type

Entering with Galaxy keyboard (Japanese)

In Galaxy keyboard (Japanese), you can use four types of keyboards: "Qwerty", "3x4 no flick", "3x4 flick", "3x4 8 Flick".

- Qwerty: it is a keyboard similar to the one of PC. Enter Japanese in Roman character.
- 3x4 no flick: it is a keyboard similar to a general mobile phone keyboard (for multi-tap method). Tap a key assigned character you want to enter several times until the target character is entered.
- 3x4 flick, 3x4 8 Flick: it is a keyboard to enter by flick operation.

Qwerty keyboard

3x4 no flick keyboard

① Additional functions are displayed.
You can use the function such as inputting of Emoji/Stamp/Emoticon/symbol, voice input, keyboard settings.
- Tap ••• to display the function to be able to add to additional functions.
- When a character is entered, predictive conversion options/usual conversion options are displayed. Tap an option to enter text. Tap ••• to widen the display area of predictive conversion options/usual conversion options. Tap ••• to return the previous display.

② Switch input language.

③ Switch to Number/Symbol input mode.

④ Enter a space or select predictive conversion options.
- When a character is entered on Hiragana/kanji input, tap it to select predictive options.

⑤ Delete characters or symbols to the left of the cursor.

⑥ Display the key corresponding to the entry field on an operation status or in selection, and the confirming an entered character, line breaking, moving to the next entry field can be done.

⑦ Moves cursor left or right.
- When "Wildcard prediction" is set to ON, tap to use wildcard prediction.

⑧ Switch an unconfirmed character to the one in reverse order of when you tap the key (Does not switch when using flick input).

⑨ Switch upper/lower case or put a voiced sound mark or the Japanese voiceless bilabial sound mark, etc.

Selecting/Copying/Cutting/Pasting text

1 While the keyboard is displayed, touch and hold entered character string
- 💧, etc. appear. Drag to move the cursor.

2 Tap the item to use

Item	Description
Cut	Cut out selected character string.
Copy	Copy the selected character string.
Paste	Paste copied/cut character string.
Select all	Select all entered characters.

Information

- In horizontal view display, the display may be different.
- For some apps, the function may not be available or there may be unavailable functions. And display of icon may be different or icon other than ones in Step 2 may be displayed.
- Touch and hold an entry field in which any characters are not entered to display a menu so that you can use the item other than the above (For some apps, it may be unavailable).

Setting character entry/conversion function

Setting Galaxy Japanese keyboard

You can set entry operations when entering characters using Galaxy Japanese keyboard, register to the user dictionary, etc.

1 From the Home screen, ⊞ → "Settings" → "General management" → "Galaxy Keyboard settings"

2 Tap an item you want to set

Item	Description
Languages and types	Set input language and keyboard type.
Japanese input options	Set flick input, word learning, wild card prediction, voice input, etc.
Predictive text	Set whether to use predictive text.
Suggest emojis	Set whether to display emoji suggestion.
Suggest stickers while typing	Set whether to display suggest stickers while typing.
Auto replace	Set about auto replace.
Auto spell check	Set whether to do the auto spell check.
More typing options	Set about toggle input, auto move cursor, etc.
High contrast keyboard	Set whether to use High contrast mode.
Theme	Set keyboard's theme.
Mode	Set the keyboard modes.
Size and transparency	Set size and transparency of keyboard.
Layout	Set whether to display number keys and alternative characters.
Font size	Set font size of keyboard.
Custom symbols	You can change the symbol of the keyboard.
Predictive text lines	You can set line number of predictive text.
Swipe, touch, and feedback	Set about swipe, touch, and feedback.
Select third-party content to use	Set whether to use third-party content on the keyboard add function.
Reset to default settings	Reset the keyboard settings and delete personalized predictions data.
About Galaxy Keyboard	Check version of Galaxy keyboard.
Contact us	You can use Galaxy Members.

Display and icons

About status icon and notification icon

In the status bar at the top of the display, icons which indicate the terminal status or notification information are displayed. Notification icons appear on the left side of status bar, and status icons appear on the right side of status bar.

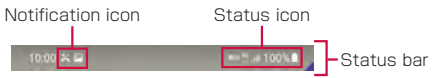

Main notification icons

- Some notification icons may be displayed with icons overlapped for indicating multiple notifications.

Notification icon		Page
	Incoming call/making a call/answering a call	P.59
	Missed call	P.62
	New Gmail exists	P.74
	New +Message exists	P.69
	Data receiving/completed	P.123
	Data sending/completed	P.123
	Messages in voice mail service exist	P.65
	Alarm exists	P.89
	Alarm of calendar, etc. exists	P.90
	USB tethering enabled	P.99
	Setting/checking software update	P.138
	Hidden notification information exists	-
	VPN connecting	P.100
	Image saved by screen capture exists	P.34
	Available memory space of the terminal drops	-

Main status icons

Status icon		Page
(Weak ⇔ Strong)	Airwave status	-
(Weak ⇔ Strong)	Radio wave condition (roaming)	-
	Out of service area	-
	Airplane mode	P.98
	5G network available/communication in use	-
	4G (LTE) network available/communication in use*1	-
	3G network available/communication in use	-
	HSDPA network available/communication in use	-
	GPRS network available/communication in use	-
	Wi-Fi network available/communication in use	P.96

Status icon		Page
	Internet connection not established network connection status/Connect to a Wi-Fi network that requires user and the user authentication is in an unestablished state • The Internet cannot be connected to.	P.96
	Wi-Fi tethering ON	P.99
	Bluetooth function ON *2	P.122
	In Manner mode (Vibrate)	P.101
	In Manner mode (Mute)	P.101
	Alarm set	P.89
	VoLTE network usable	-
(Low ⇔ Strong)	Battery level	P.28
	Charging battery	P.28
	Omakase lock is set on My docomo service/NFC not available	-

*1 "4G+" is always displayed when the terminal is connected with LTE.
*2 Displayed when notifications panel is displayed (P.40).

Notification panel

Scroll/flick the status bar downward to display the Notification panel. You can check the notification information or tap the icons to set functions. Scroll and flick upward to close the Notification panel.

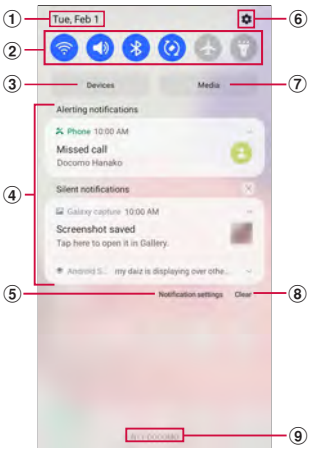

Contents on Notification panel

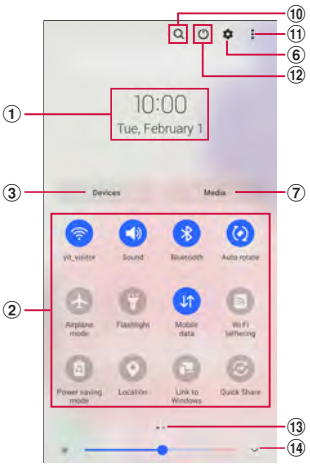

Contents on Notification panel (Unfolding)

① Display current date and time.

② Using quick settings buttons, you can set or switch ON/OFF of Wi-Fi, Bluetooth, light, etc. Touch and hold to display setting screen for each function. Scroll the bar downward to display hidden icons.
- Tap on the notifications panel to add the icon to the notifications panel.

③ Bluetooth or other devices connected to the terminal can be easily operated.

④ Information in progress or notifications* is displayed. You can confirm the information and launch apps by tapping. Swipe left or right to set details settings of notifications and snooze of notifications.

⑤ Set about notifications (P.102).

⑥ Settings menu is displayed (P.95).

⑦ You can control music or videos being played on the terminal or on other Galaxy devices. Tapping on the Media screen and following the on-screen instructions enables you to play music and other media on other Galaxy devices.

⑧ Delete notification information and notification icon on the status bar.
- Some notification information may not be deleted.

⑨ Display the connecting network operator name.

⑩ Enter the character to search apps.
- Tap to search by voice.

⑪ Change order and layouts of the quick settings button and set display setting of the notification icon.

⑫ You can power off, restart, etc.

⑬ Indicates the notification panel count and current location.

⑭ Adjust the display brightness (P.104).

* Some notifications will not be displayed on the notifications panel on the lock screen and you will not be notified about them.

Information

- Quick settings buttons are displayed in blue when the functions are enabled.
- Touch and hold each notification to set receiving method of the notification (Alert, silent, OFF, etc.). If you set "Silent", no sound or vibration is activated when receiving a notification, and it is displayed only on the notification panel.

Recently-used apps

1 [History button]
- Tap a thumbnail of app to activate the app.
- Flick thumbnail up to delete it from the list.
- Tap "Close all" to remove the list.
- Tap the icon on the top of thumbnail to do the following.
  - "App info": Set about the app.
  - "Open in split screen view": Use split screen view (P.42).
  - "Open in pop-up view": Some apps can be launched as a popup.
  - "Lock this app": Locks the app to keep it running and will not remove it from the list even if you tap "Close all".

Information

- The item displayed when you tap the icon that top of app thumbnail is depending on the app.

Pinning apps to the screen

You can pin apps to the screen so that other apps cannot be used.
- The "Pin windows" (P.107) needs to be set to ON in advance.

1 [History button]

2 The icon that top of app thumbnail you want to fix → "Pin this app"

3 "OK"

Information

- To release app pins, simultaneously touch and hold [History button] and [Back button].

Using split screen view

You can display the windows on the screen to use different two apps at the same time.

- Start the apps you want to display in advance.

* Some apps may not support split screen view.

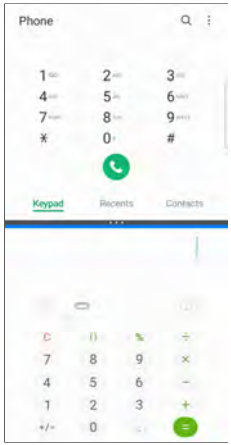

Split screen view example

1 [History button]

- App's thumbnails are displayed.

2 The icon that top of app thumbnail → "Open in split screen view"

- The screen is divided into two sections, top and bottom, and the app will be displayed on the top part of the screen.

3 Select an app to display at the bottom area

- App is displayed bottom of the screen.

Information

- When the display is landscape, the screen is divided into two sections, right and left.
- Drag on the dividing line displayed in the center of the screen up or down (left or right when the screen is horizontal) to change the window size for each app. The selected app is displayed in blue.
- To end the split screen view, flick of the dividing line displayed in the center of the screen up or down (left or right when the screen is horizontal).
- Tap → of the dividing line displayed in the center of the screen of the split screen view, you can create apps pair for using the edge panel "Apps".

SuguApp

Set the SuguApp that you can easily launch apps and operate phones with intuitive operations such as shaking your smartphone.

1 From the Home screen, ⊞ → "Settings" → "docomo service/cloud"

2 "SuguApp"

■ SuguApp

Shake the terminal to start an app by setting two types of apps. Also, you can display other app icons on the screen that shake the terminal and start app.

- Shake 1-time: You can set the app by shaking the terminal once.
- Simultaneous display of icons: When you use Shake 1-time, you can set to display the app simultaneously on the display.
- Shake 2-times: You can set the app by shaking the terminal twice.
- Simultaneous display of icons: When you use Shake 2-times, you can set to display the app simultaneously on the display.
- SuguApp Operation Deterrence: You can set the apps that deter the app launch by SuguApp.

■ Suguden settings

You can configure the Suguden function that allows you to control the terminal using motion and voice keyword.

- Suguden settings: You can set the operation ("Answer", "Disconnect", "Call", "Mute, Reject") of the terminal.

Information

- SuguApp will not operate in the following cases:
  - When making or receiving an additional call during a call
  - When you are lying down
  - While you perform vigorous exercise such as running, or going up or down stairs
- "d払い (d payment)" is set initially for Shake 1-time.
- You cannot use the SuguApp function while the screen is off, the lock screen, or during a call.
- If you place the terminal in a bag or pocket with the screen ON, in rare cases, SuguApp may recognize the action as a motion and start the app.
- When the SuguApp functions are available, a notification icon will be displayed. You can check detailed notification information from the notification panel.
- You can only use one of the functions in "SuguApp" and "Suguden".
- For details on SuguApp, refer to NTT DOCOMO website.

Suguden settings

You can configure the Suguden function that allows you to control the terminal using motion and voice keyword.

1 From the Home screen, C → ⋮ → "Settings" → "Suguden settings"

2 Set each item

- You can also set each item by from the Home screen, ⊞ → "Settings" → "docomo service/cloud" → "SuguApp" → "Suguden setting".

Item		Description
Answer		Answer calls by holding up the terminal on your ear.
Disconnect	Motion	Disconnect calls by placing the terminal horizontally with the screen faced down during a call, or shaking the terminal twice during a call.
	Voice command	Disconnect the call after you say the disconnect command during a call and move the terminal away from your ear.
Call		Make a call to the other party that is registered in advance by shaking the terminal once then holding up to ear.
Mute, Reject		Mute or reject calls by placing the terminal horizontally with the screen faced down during a call is incoming, or shaking the terminal twice. You can select and set from "OFF", "Mute", "Reject" or "Reject and send SMS".
Disable Suguden during roaming		You can automatically turn off Suguden functions when you are overseas.

Information

- Suguden will not operate in the following cases:
  - When using the speakerphone
  - When using the earphone/headset
  - When connected with a Bluetooth device with calling function (Disconnect (Voice command), Call (Motion))
  - When making or receiving an additional call during a call
  - When you are lying down
  - While you perform vigorous exercise such as running, or going up or down stairs
  - The display is covered with a book type smartphone case etc.
- If you place the terminal in a bag or pocket with the screen ON while there is an incoming call, in rare cases, Suguden may recognize the action as a motion and answer or end the call.
- The proximity sensor does not respond well to black objects.
  When answering calls, if you press the receiver over your hair, the proximity sensor may have trouble working and may cause failure to answer the call. In this case, please press the receiver directly to your ear.
  When disconnecting (Motion)/Muting, rejecting a call, turning the terminal over on a black desk, etc. may cause the operation to fail (cannot disconnect (Motion)/mute, reject). In this case, instead of placing the terminal directly on the surface, raise the terminal 1 cm from the desk, etc. as you flip it over to operate (disconnect (motion)/mute, reject).
- Suguden does not support video calls.
- When the Suguden functions are available, a notification icon will be displayed. You can check detailed notification information from the notification panel.
- For details on Suguden, refer to NTT DOCOMO website.

About Disconnect (Motion)

- If a motion is detected after enabling the Suguden call ending function, the call will be ended in the following cases.
  - When the other party is on hold
  - When the answering message is active (playing the answering message/recording answering message)
- When disconnecting a call with Suguden motion, it may not react (disconnect) if the speed of motion for placing the terminal facing down is fast. In that case, try the motion slowly to react (disconnect).
- Strongly shaking the terminal will be treated as motion and an incoming call may be disconnected.

About Disconnect (Call)

- If a disconnect command is detected after enabling the Suguden call ending function, the call will be ended in the following cases.
  - When the other party is on hold
  - When the other party is activating answering message (playing the answering message/recording answering message)
- If Disconnect (Voice command) is ON while talking on the phone, other apps that use the microphone or audio during a call (such as a call recording app) may not be available. If you want to use these apps during a call, turn OFF disconnect (Voice command) after ending the call to enable them.
- A call cannot be ended with voice command while the answering message is running (playing the answering message/ recording a answering message). If you answer the phone while recording an answering message, and recording a call you can end the call with a voice command.
- If you are using "Jspeak" during a call, you cannot use a voice command to end the call.
- While the Suguden voice function uses voice recognition technology and language processing technology, docomo does not guarantee the accuracy of this technology.
- Your voice may not be recognized if your mouth is too far away from the smartphone, the volume is too low, or your surroundings are noisy when you issue a voice command.

About Call

- You can only make a call when the terminal is displaying the Home screen or lock screen (unlocking method is "Swipe").
- You can only use one of the functions in "SuguApp" and "Suguden".

About Mute, Reject

- Strongly shaking the terminal will be treated as motion and the functions set by Mute, Reject may be executed.

Disable Suguden during roaming

- The Suguden function is automatically disabled overseas. To use Suguden in overseas, turn off the "Disable Suguden during roaming".

Home screen

Switching home apps

Change the Home screen displayed by pressing ◉ [Home button].

1 From the Home screen, ⊞ → "Settings" → "Apps" → "Choose default apps" → "Home app"

2 "docomo LIVE UX"/"One UI Home"

docomo LIVE UX

A home app supplied by DOCOMO. The Home screen can be customized intuitively.
For details of docomo LIVE UX, see from the Home screen, ⊞ → ⋮ → "Help" or visit the following website.
https://www.nttdocomo.co.jp/service/live_ux/index.html (In Japanese only)

Home screen

On the Home screen, you can launch the apps or use the widgets.
All apps are stored in the app list, and the app icon shortcuts are placed in the Home screen.

- You can toggle the pages by flicking left and right the Home screen.
- When there are app's notification, a dot or number may be displayed on the upper right corner of an app icon or a folder.

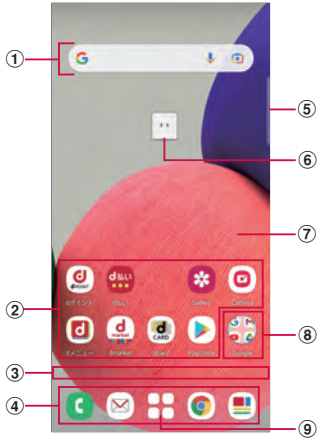

Contents on Home screen (example)

① **Widgets**
- Launch a widget (Google search)
- Touch and hold it to display shortcut menu and you can perform certain operations.

② App icon
- Tap it to launch app.
- Touching and holding an app icon will display the shortcut menu enabling you to run certain operations and check app information. If ＝ is displayed, touching and holding it and dragging it to any location enables you to add shortcuts for certain operations to the Home screen.

③ Indicator
- Indicates current location of the Home screen.
  * This appears only when flicking the screen.

④ Dock
- Displayed even when the Home screen is switched.

⑤ Edge panel handle
- Swipe to the center of screen, edge panel is displayed (P.50).

⑥ Machi-chara
- Tap to get answers to things you want to know in conversational form.

⑦ Customize area
- You can place app, widget and folder, etc.

⑧ Folder
- Multiple app icons are stored.

⑨ App list button
- Display all apps. You can use Search apps and Osusume Apps (P.48).

Managing Home screen

Moving app icon, etc.

1. Touch and hold an app icon or widget, etc. to move on the Home screen
2. Drag to the position you want to move
   - Drag the edge of the Home screen, it move to the next page.

Adding an app icon

1. From the Home screen, ⊞
2. Touch and hold an icon to add to the Home screen
3. "Add to Home screen"
   - Drag the edge of the Home screen, it move to the next page.
   - Multiple icons with the same icon can be pasted.

Removing an app icon from the Home screen

1. Touch and hold an app icon etc. to remove on the Home screen
2. Drag "Remove" on the top of the screen
   - The icon will be deleted from the Home screen, however, the app itself will not be uninstalled.

Deleting Widget, etc.

1. Touch and hold the widget, etc. to delete on the Home screen
2. Drag "Remove" on the top of the screen

Uninstalling the app

1 Touch and hold an app icon to uninstall on the Home screen
- If you uninstall the app in a folder, tap a folder and touch and hold an app to uninstall.

2 Drag on the top of the screen → "OK"
- If an app cannot be uninstalled, is not displayed.
- If you uninstall the app, the app is deleted from app list.

Change the folder name

1 Select the folder on the Home screen

2 Tap folder name

3 Enter folder name
- Tap "Done" displayed on the keyboard.

Setting Home screen

1 Touch and hold area in which icons, etc. are not displayed on the Home screen → "Home settings"

2 Select an item

Item	Description
Notification dots	Turn ON/OFF a dot (point) when there is a message.
Add icons to home screen	When installing a new app, select whether to paste an icon automatically in the Home screen, or display it in an app list only. * By default, the installed app is placed in the Home screen.
Add home settings icon	Turn ON/OFF on the Home screen.
Wallpapers	You can change the wallpaper of Home screen and Lock screen.
Machi-chara	Turn ON/OFF Machi-Chara or set Machi-Chara settings such as changing Chara.
Osusume Apps settings	Set display settings of "Osusume Apps" that appear in the app list screen.
Display my daiz NOW	Perform display settings of leftmost my daiz NOW on the Home screen.
My Magazine	Turn ON/OFF of the flick activation on My Magazine.
Get started	You can check the tutorial of the Home screen.
Help	You can check the detailed usage of the Home screen.

App list screen

Tap ⊞ to display. It is a function to search the list in the order of using the app or in the order of installation, or search by app name. In addition, current featured apps can be picked up for you.

App list screen

① **App search bar**
- Tap it to search the app by inputting character.

② **Osusume Apps**
- Display recommends maximize four apps.

③ **All apps**
- Display all apps installed on the terminal. Tap it to launch app.

④ **See more**
- Display recommend apps (P.48).

⑤ **Pull-down**
- You can reorder all apps on the app list ordered by Recent, Name, Installed.

Using Recommends apps

Recommends an apps or services according to the usage situation of customers.

1 From the Home screen, ⊞

2 Tap "Osusume Apps" button
- A confirmation screen appears for the first activation and tap "ENABLE" to display the description screen. On the description screen, tap "おすすめアプリ一覧へ(Go to Osusume Apps)" to display application list screen and notification of recommended apps sets ON.

3 Select an app to use
- Introduction screen of apps or service page is displayed.

Information

- On recommends app list screen, ⚙ → tap ◐/● of each setting to switch ON/OFF of setting.
- Tapping ⊞ on the Home screen with the recommended app terms of service agreed to will display a list of some recommended apps. If you want to see more recommended apps, tap "See more".

My Magazine

My magazine is free service that obtain information such as the news or the article on the topic provided by dmenu that reflects the interests and preferences of each customer. It will get close to your preferences the more and more that you use it via the articles you tend to read and profile information. You can set to receive the notification of My Magazine and to use customization of My Magazine using the location information and docomo service subscription information.

About article

1 From the Home screen,
- When category selection screen to display, select the category and tap "OK".
- Display the article list by category.
- You can toggle the category by flicking right and left the screen.

2 Tap a desired article to display
- Tap to change settings of My Magazine and check the help.

Setting Display category

1 From the Home screen,

2 → "表示ジャンル設定 (Setting Display category)"
- The category that checked is displayed on My Magazine.
- Tap of right upper corner to reorder the category.

my daiz NOW

my daiz NOW is a service that delivers convenient information to you in accordance with your likes and actions. You can easily check weather, traffic, eating out, and other information that is useful for your life.

How to view the screen

my daiz NOW (example)

1 Flick to the right on the Home screen
- Swipe up or down to switch displayed cards.
- Flicking left returns you to the Home screen.

2 Tap the card to read
- Tapping a card enables you to view more detailed information.
- Tap the my daiz (character) in the upper left side of the screen to get answers to things you want to know in conversational form.

Display setting

1 Touch and hold area in which icons, etc. are not displayed on the Home screen → "Home settings"

2 Turn off ● of "Display my daiz NOW"

Home app information

You can view the developer or version, etc. about docomo LIVE UX.

1 From the Home screen, ⊞ → ⋮

2 "About"

- If an update of docomo LIVE UX is available, "Update now" is displayed on the app's information screen and tap it to update docomo LIVE UX.

Edge panels

You can use shortcut of apps, etc. from the edge panel.
On the Home screen, drag the edge panel handle to center to display the edge panel.

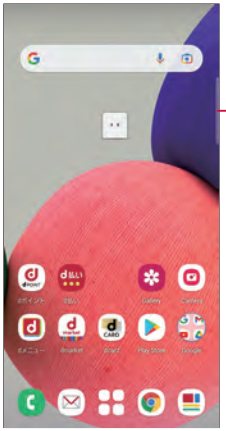

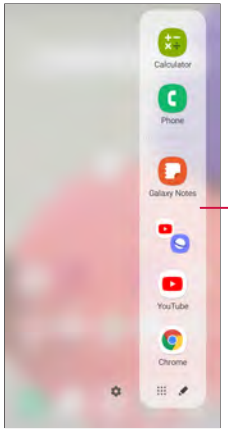

Edge panel screen (example)

① Edge panel handle
② Edge panels

Setting Edge panel

If you turn on Edge panel, edge panel handle is displayed and swipe it to display the Edge panel. You can display apps or functions, etc. on the Edge panel.
Also, you can add the other edge panel or set the Edge panel or set a position of Edge panel handle, etc.

1 From the Home screen, ⊞ → "Settings" → "Display" → "Edge panels"

- Setting menu of edge panels is displayed.

2 ◯◯

Adding Edge panel

Add the Edge panel you want to use on the edge screen.

1 On the setting menu of edge panel, "Panels"
- Panel screen is displayed.

2 Mark Edge panel to add

Downloading Edge panel

You can download the Edge panel from Galaxy Store.

1 On the setting menu of edge panel, "Panels"

2 "Galaxy Store"
- After that, follow the onscreen instructions.

Editing Edge panel

Edit apps or functions displayed on the Edge panel.

1 On the setting menu of edge panel, "Panels"

2 "Edit" under the Edge panel
- After that, follow the onscreen instructions.

Setting Edge panel handle

Set position, color or size of Edge panel handle.

1 On the setting menu of edge panel, "Handle"

2 Set each item

Information

- If multiple edge panels are selected, on the setting menu of the edge panel, tap "Panels" → ⋮ → "Reorder" to change the order of edge panel.
- Tap ⚙ on the Edge panel to display Panel screen.
- On the Edge panel "Apps", drag the icon to the left to activate the app or activate it as a popup.

One UI Home

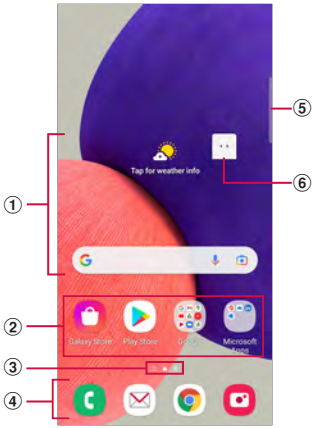

Contents on Home screen (example)

① **Widgets (e.g. weather information, Google Search)**
- Activate or operate widget (app located on the Home screen).

② **Shortcuts**
- Tap to activate apps.

③ **Current location of the Home screen**

④ **Dock**
- Displayed even when the Home screen is switched.
- Shortcuts and folders can also be located.

⑤ **Edge panel handle**
- Swipe to the center of screen, edge panel is displayed (P.50).

⑥ **Machi-chara (e.g. my daiz)**
- Notify you of information such as mail reception or incoming call.

Information

- From the Home screen, flick the screen up to display app screen (P.53).
- From the Home screen, touch and hold a wallpaper in which shortcuts or widgets are not displayed → tap "Home screen setting" → "Show Apps screen button on Home screen" to set to display apps button on the Home screen.

Adding shortcuts or widgets

1 Touch and hold a wallpaper in which shortcuts or widgets are not displayed on the Home screen
- To add shortcut of app, flick the screen up on the Home screen, then drag to the Home screen.

2 "Widgets"

3 Touch the item to add to the Home screen → "Add"

Creating a folder

1 Touch and hold a shortcut on the Home screen → Drag over the shortcut you want to summarize

2 Enter folder name
- Tap "Done" displayed on the keyboard.

Changing wallpaper

1 Touch and hold a wallpaper in which shortcuts or widgets are not displayed on the Home screen

2 "Wallpapers"

3 "My wallpapers"/"Gallery"/"Wallpaper services"

4 Select Wallpapers to set

5 Follow the onscreen instructions

Information

- Set "Apply Dark mode to Wallpaper" to ON to be able to apply dark mode to the wallpaper (P.103).
- Tap "Explore more wallpapers" to be able to download the wallpaper from Galaxy Themes.

Changing theme

1 Touch and hold a wallpaper in which shortcuts or widgets are not displayed on the Home screen

2 "Themes"

3 Set according to the onscreen instructions

Information

- To delete a shortcut, widget, folder, etc., touch and hold a shortcut, widget or folder → tap "Remove".
- For widgets, wallpapers, themes connecting to network, packet communication fee may be charged.

Apps screen

Apps screen when the Home app is set to "One UI home" is described.

1 Flick the screen up on the Home screen
- Apps screen is displayed.

Contents on Apps screen (example)

① Search
- Enter the character to search apps.
- Tap search field and to search by voice.

② Folder
- Multiple apps are stored.

③ Apps

④ Menu
- You can reorder the apps and change settings of the Home screen or the Apps screen.

⑤ Machi-chara (e.g. my daiz)
- Notify you of information such as mail reception or incoming call.

⑥ Shows which Apps screen you are on

Adding shortcuts to the Home screen

1 From the Apps screen, touch and hold an apps to add to the Home screen
- Alternatively, you can add a shortcut from the shortcut menu that appears by touching and holding an app.

2 When the Home screen is displayed, drag to the position you want to add to and release it

Sorting apps

1 From the Apps screen, touch and hold an apps you want to move

2 Drag to the position you want to move to and release it

Uninstalling/Disabling apps

1 From the Apps screen, touch and hold an apps you want to uninstall/disable

2 "Uninstall"/"Disable"

3 "OK"/"Disable"

Information

- To enable disabled apps, from the Apps screen, "Settings" → "Apps" → → "Disabled" → "OK" → tap apps you want to enable → "Turn on".

App list

- This section describes when the Home App is set to "docomo LIVE UX".
- For some apps, you can check functions or operation steps from the help.
- Some apps require subscriptions (charged) to use.
- The installed apps are as follows.

Icon	Apps	Description
	Anshin Security	This is an app where the security countermeasure for a virus for free, dangerous site, dangerous Wi-Fi, troublesome phone call, dark web monitoring can be used.
	Osaifu-Keitai	This app displays registered Osaifu-Keitai services that are supported as a list. You can also check recommended services, and the balance and points available for registered services. → P.86
	Camera	Shoot still images/videos. → P.77
	Calendar	Manage schedule. → P.90
	Gallery	View/organize still images/videos. → P.83
	Schedule	An app for creating/managing events and the data is shared with Memo app.
	Data copy	An app for transferring data when you change models, or for backing up to/restoring from "microSD card". → P.93
	データ保管BOX (Data Storage BOX)	An app for using データ保管BOX (Data Storage BOX). Data Storage BOX is a service which allows you to upload files to easily manage them in the cloud.
	docomo mail	Send/receive the mail using docomo mail address (@docomo.ne.jp). if a d ACCOUNT is being used, use the same mail address on several devices such as tablets and computer browsers to send and receive, and read mail. → P.69

Icon	Apps	Description
	docomo phonebook	A phonebook app supplied by DOCOMO. The phonebook data of docomo's account can be managed on the cloud. → P.66
	Drive*1	Save images or videos to Google Drive or share them.
	Jspeak	This is an app which translates your words into the other party's language. This app enables you to enjoy communicating with other parties whose languages are different by using the face-to-face translation, phone call translation, Utsushite Hon'yaku, and fixed form text function.
	Photos*1	View pictures and movies. You can also sync with Google Photos to backup images and share them with others.
	Internet*1	Web browser app. → P.75
	Voice Recorder*1	Record voice sound. → P.92
	My Files	View/manage data such as still images, videos, music, etc. →P.120
	マイマガジン (My Magazine)	My Magazine is a safe and secure free news app whereby new information and surprises are touched upon on a daily basis. → P.49
	Maps	Check current location or search a destination with Google Maps. → P.89
	Memo	An app for creating/managing memos and the data is shared with Schedule app.
	Radio	You can listen to radio stations broadcasting in the area you are in with the terminal. Compatible devices such as earphones are separately required to listen to the radio.
	Disaster kit	An app for using Disaster Message Board, Disaster Voice Messaging Service and Early Warning "Area Mail". → P.74
	Clock	Use Alarm, World Clock, etc. → P.89

Icon	Apps	Description
	Dictionary	Search a word etc. using the dictionary.
	Instruction Manual	The instruction manual for the terminal. You can activate desired functions from instructions.
	Settings	Make the terminal settings. → P.95
	Calculator*1	Use to perform various calculations. → P.92
	Phone	Make/receive calls using the terminal's "Phone" app.
	Contacts	Manage contacts using the terminal's "Contacts" app provided by Galaxy.
	Amazon Shopping	It is an official app that you can use online shopping more profitable and more conveniently at Amazon.
	AR Zone	You can use various AR apps. → P.81
	Chrome	Web browser app by Google.
	dphoto	A service with which you can back up photos or videos to cloud up to 5 GB for free and access them from smartphone, PC. For using "Print service function" that make the photobook from taken pictures, separate application and install dphoto print app are required.
	d ポイント (d POINT)	d point is an app with which you can "Confirm", "Save" and "Spend".
	dmarket	Sale of digital content, such as music, videos, books, shopping and travel sites, and various other services are provided. → P.84
	dmenu	This is a shortcut app to the "dmenu". In dmenu, you can quickly access DOCOMO recommended sites and useful apps. → P.84
	d 払い (d payment)	This app is for using the smartphone payment service provided by docomo called "d-harai". By just showing the barcode displayed in the app, shopping is easy, convenient, and you can get reasonable prices at participating stores.

Icon	Apps	Description
	dcard	This app enables you to easily check your d CARD usage status, d Points that you have accumulated, and useful information. You can also set "iD", electronic money provided by DOCOMO.
	Disney DX	Disney DX is an app full of special videos and select benefits whereby Disney's official video streaming service "Disney+" becomes even more enjoyable.
	Duo	Make a video call.
	Facebook	Facebook is a social networking service that makes it easy for you to connect and share with your family, friends, and work colleagues online, and find out what is happening in the world.
	Galaxy Free	Display the personalized news, etc.
	Galaxy Global Goals*1	This app supports Global Goals.
	Galaxy Members*1	You can get the necessary answers on Galaxy products and take advantage of events, user communities, diagnostics, and customer service.
	Galaxy Notes*1	Create a note. → P.91
	Galaxy Store	Download apps or update installed apps. → P.85
	Galaxy Wearable*1	This app is used when a Galaxy peripheral device is connected to the terminal and manages the functions for those devices.
	Game Launcher	Manage games. → P.35
	Gmail	Send/receive emails via Gmail. → P.74
	Google	Search various information by the quick search box.
	Play Movies & TV*1	Purchase videos from Google Play.

Icon	Apps	Description
	iDアプリ (iD application)	An app provided by DOCOMO for use of electronic money "iD". You can enjoy shopping simply and conveniently only by holding Osaifu-Keitai set with "iD" over the IC card reader in stores. →P.88
	Kindle	Use e-book service provided by Amazon.
	LinkedIn*1	A social network service for business specialized for professional networking.
	my daiz	By simply speaking, you can easily search for information and have information that you require delivered to you at the optimum timing. In addition to weather and train information, you can add affiliated services, such as recipe searches and home delivery, for your convenience.
	Office*1	Microsoft Office app for Android.
	OneDrive	Microsoft OneDrive app. Use for online storage.
	Outlook*1	A Microsoft Office app for managing personal information that includes email functionality, a calendar, and other functions.
	Play Store	Download apps from Google Play. → P.85
	S Health*1	It can manage your health. → P.94
	YouTube	Play/post videos.
	YT Music*1	Use YouTube Music.
	+Message	You can send/receive text message to/from mobile phone number as a recipient. In addition to text, you can also send images, videos, stamps, etc. → P.69
	Osusume Apps*2	Display recommend apps. → P.48

*1 If you perform "Factory data reset", these apps will be uninstalled. When downloading them again, you may need a Wi-Fi connection.
*2 If you are using "One UI home" on the Home App, this setting is displayed.

Information

- These apps are preinstalled ones when you purchased the terminal. Some preinstalled apps can be uninstalled. Even if you uninstall such apps, downloading again may be available at "Play Store" (P.85), etc.
- When an app has notification information, number (number of notifications) may be displayed on the icon.

Phone/Phonebook

Making a Call

1 From the Home screen,

2 Enter a phone number of the other party

- Enter a city code even when the other party is in the same city.

Dial screen

① **Register contact/Update***
Register or update the phone number to contact.

② **Phone number entry field**
Entered phone number is displayed.

③ **Video call***
Make a video call.

④ **Menu**
Display menu.

⑤ **Search**
Display recent search history.

⑥ **Call**
Call to an entered phone number.

⑦ **Delete key***
Delete a number at the far right or a number to the left of the cursor. To delete all numbers entered, touch and hold the key.

* Displayed when a phone number is entered.

3

4 End a call,

Information

- To show/hide the caller ID per a call, enter prefix "186" (notify) / "184" (not notify) before the phone number. You can set to show/hide in "Caller ID notification" (P.65) in advance.
- Use "Add 2-sec pause" or "Add wait" to dial phone number and additional code in a row when sending an additional code during a call is required for bank balance inquiries, ticket reservation services, etc.
  - On the phone screen, enter the phone number → ⋮ → "Add 2-sec pause" → enter the desired phone number, tap , the call is connected and the touch-tone signals (numbers) are automatically sent after about 2 seconds.
  - On the phone screen, enter the phone number → ⋮ → "Add wait" → enter the desired phone number → tap , the call is connected and the touch-tone signals (numbers) are sent when you have tapped "Yes".
- You can make calls and video calls in high quality with VoLTE. To use VoLTE, you and the other party both need to meet the following conditions.
  - The device supports VoLTE.
  - It is within the VoLTE area.
  - "Network mode"* of "Mobile networks" is "5G/4G/3G/GSM (auto connect)" or "4G/3G/GSM (auto connect)".

  * From the Home screen, ⊞ → "Settings" → "Connections" → "Mobile networks" → "Network mode"
- You can see each other's images while talking with video call. You can also switch to voice call.
  - When making video calls, there is a call charge and packet communication charge. In addition, there is also a packet communication charge for incoming video calls.
  - Since it is a best effort communication (the optimum communication speed changes depending on the network traffic), the image quality differs depending on the network environment.
  - When you could not switch to video call from voice call, a notification will be shown on the display indicating that the switching to video call failed, and voice call will continue.
  - As the display processing is different for each phone model, your image displayed on the terminal for the video call may differ to what is displayed on the other party's device.

Emergency call

Emergency call	Phone number
Police	110
Fire and ambulance	119
Marine emergency	118

Information

- The terminal supports "Emergency report location notification". When calling to 110, 119, or 118, the information of where you are calling from is automatically informed to the police or other agencies. Due to the location where you call or the signal status, the location information may not be informed correctly. If the location information is informed, the agency's name is displayed on the Home screen. Also, if you call with "184" attached or other non-notification functions, the location information and telephone number will not be informed. However, if the agency consider it is necessary to know those information due to lifesaving, the agency may retrieve your information regardless of your current settings. Besides, the introduced region or period of "Emergency report location notification" varies from each agencies.
- When calling to 110, 119 or 118 from the terminal, inform them that you are calling from a mobile phone and give your phone number and your current location precisely for checking callback from the police/fire department. To make sure that you are not cut off during the call, do not move during the call and do not turn OFF the power after the call, but keep it ON for about 10 minutes.
- For some areas you are calling from, you are not connected to the local fire department or police.
- In Japan, when nanoUIM card is not inserted to the terminal, the emergency numbers of 110, 119 or 118 are not available on the PIN code entry screen or during PIN code lock/PUK lock.
- If you make an emergency call 110, 119, 118 with "Block numbers" (P.63) is set, call blocking setting will be disabled.
- You may not be able to make an emergency call on some networks.
- You can not make emergency calls with video calls.

Receiving a call

1 A call is received

- A incoming screen appears.

Incoming call screen (voice call)

Incoming call screen (video call)

2 Drag / to outside of the circle

- A call starts

To reject a call

Drag / to outside of the circle.

To reject a call and inform the caller of the reason of the rejection by SMS

Drag up "Send message" at the bottom of the screen and tap a reject message.

- You can change the reason of rejection (P.66).
- When you "Remind me in 1 hour" is checked, if you send a registered decline message/select "Write a new message", it will be registered to Reminder automatically.
- Tap "Write a new message" to create SMS.

To answer with "Answering message" (voice call only)

Drag up "Send message" at the bottom of the screen and tap "Answering message".

When you do not want to show your image to the caller

Tap "Hide me" and drag to the outside of the circle that is shown.

To answer a video call with a voice call

Drag to outside of the circle.

- A voice call starts.

3 When the call ends, /

Information

- To stop ringtone sounding or vibration, press [] [Side key] or volume UP key/volume DOWN key during a incoming call.
- If you set "Answer" in "Suguden settings" (P.43) to ON, you can answer an incoming call simply by placing the terminal on your ear.
- If you set "Show caller information" of "Other call settings" (P.65) in "Settings" to OFF, you can hide "Most recent call" of incoming call screen.

Receiving incoming call while app is activated

If an incoming call is received when an app is activated, the call is displayed in a pop-up dialog box.

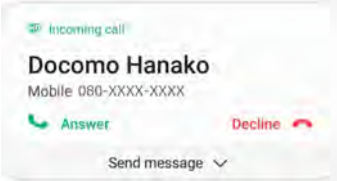

Incoming call screen

- You can start/reject the call by tapping "Answer"/"Decline".
- You can reject a call and convey the reason for rejecting the call to the caller with a message by tapping "Send message".
- Tap the screen to display in full screen.

Operation during a call

1 A call is received
- A incoming screen appears.

2 Drag / to outside of the circle
- Display the calling screen and start calling.

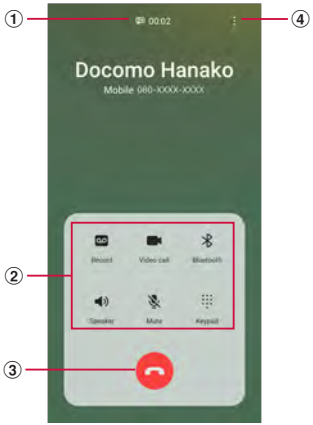

Voice calling screen

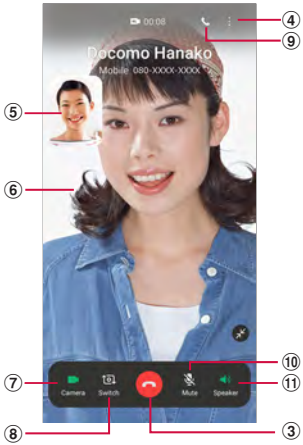

Video calling screen

① **High-quality sound indication**

② **Menu icons**
Tap to perform one of the following operations.
- Record/Stop recording: Record the calling.
- Video call: Switch to video call.
- Bluetooth: Connect with Bluetooth device to call hands-free.
- Speaker: Emit the other party's voice from the speaker to call hands-free.
- Mute: Mute your voice not to be heard by the other party.
- Keypad/Hide: Show/hide the keypad. Tap keypad to send touch-tone signal.

③ /
End a call.

④ /
Display the menu for calling screen (P.61).

⑤ **Your own image**
Tap it to exchange your own image and the other party's image.

⑥ **The other party's image**
Depending on the other party's settings, a substitute image may be displayed.

⑦ **Camera**
Switch whether to send the picture of yourself to the other party.

⑧ **Switch**
Switch the cameras for the image to send to the other party from the front side or back side.

⑨ **Voice call**
Switch to voice call.

⑩ **Mute**
Mute your voice not to be heard by the other party.

⑪ **Speaker**
Emit the other party's voice from the speaker to call hands-free.

Information
- If the caller changes to a video call during a voice call, a message is displayed confirming whether you want to switch to a video call. Tap "Accept" to switch to the video call screen.
- If you change to an app from "Phone" app during a video call, video will no longer be transmitted to the other party.

Menu on calling screen

Tap ⋮/⋮ on the calling screen to display the following items.

Item	Description
Add call*1*2	Make a second call.
Hold call*1*2	Hold a call. Tap "Resume call" while on hold to resume a call.
View contact/Add to Contacts*2	View a contact/Add to contacts.
Send message*3	Send the entered message.
Keypad*4	Show keypad.
Switch to Bluetooth device/ Switch to phone*4	Set whether or not to use a Bluetooth device when calling.

*1 Available only when you subscribe to "Call waiting".
*2 Shown only during voice call.
*3 Shown only during voice call. May not show depending on the network which is connected to.
*4 Shown only during video call.

Information

- To adjust the volume of the other party's voice (call volume), press the Volume UP key/Volume DOWN key during a call.
- The voice call screen is turned off automatically when the screen is covered by making the terminal close to your face (except when a headset or the like is attached or the speaker is ON) or if you do not operate. To display the call screen, keep the terminal away from your face or press ▯[Side key].

Recent Call

On the Recent calls screen, you can check logs of recent call.

1 From the Home screen, C → "Recents"
- The Recents screen appears.

Recent calls screen

① **Filter**
You can filter the history to display.

② **Name, phone number**
- Tap it to make a call, send the message, make a video call, check the details of call history of the other party.
- Tap and hold → "Delete" to delete the history.

③ **Recent calls**
- Recent calls (Outgoing call/Incoming call/Missed call/video call), number of calls, how long ago history, etc. are displayed.

④ **Switch tab**
Show/hide the displaying of keypad, recents, contacts.

⑤ **Search**
Search contacts.

⑥ **Menu**
Display menu.

Information

- When there is a missed call, appears on the status bar. Scroll/flick the status bar downward and follow the onscreen instructions.

Answering message

Set answering message which plays answering message and records caller's message when you cannot answer incoming calls.

- Answering message is not available for video call.

1 From the Home screen, → ⋮ → "Settings"

2 "Answering message settings" → "Auto answer with message" → "Always"/"Turn on when set to vibrate/silent"/"Manual"

- Tap "Play answering message after" to set answer time.
- Tap "Language" to set language for answering message.

Information

- When there is a answering message, the notification appears on the notifications panel. Scroll/flick the status bar downward and tap "New recorded message" → "New recorded message" to check answering message. From the Home screen, tap → ⋮ → "Settings" → "Answering message settings" → "Recorded answering messages".
- For number of storable items and maximum recording time per item for Answering message, see "Main specifications" (P.141).

Making an international call (WORLD CALL)

WORLD CALL is an international telephone service that you can use inside Japan with DOCOMO terminal.
For using overseas, see "International roaming" (P.127).

- Depending on the network operator, the caller ID may not be shown/displayed properly. In this case, calls cannot be made from the logs.

1 From the Home screen, → "0", "1", "0" → Country code → Area code (city code) → Enter a phone number of the other party

- Please omit the prefix "0" in the area code (city code). However, "0" may be required to dial to some countries or areas such as Italy.

2

3 End a call,

Call settings

Tap → ⋮ → "Settings" on the Home screen, you can set functions for calling.

Item		Description
Network service and roaming settings	Network service	→ P.65
	Roaming settings	→ P.131
	Transmission of User Information	Set whether to send use information.
Blocked numbers	Blocked number categories	Set category of blocked number. → P.66
	Add phone number	Manage the phone numbers which are going to have their incoming call and SMS blocked. → P.66
Record calls	Show notification after recording	Receive notifications when the recording is completed.
	Auto record calls	Record calls to or from selected numbers automatically.
	Recorded calls	Display the file*1 of recorded calls.
	Storage location*2	You can select storage location.
Call background		Set the background image of the call screen.

Item		Description
Call alerts and ringtone	Vibrate when answered	Set whether to vibrate the terminal when you start a call with caller.
	Vibrate when call ends	Set whether to vibrate the terminal when the call ends.
	Play tone when call connects	Set whether to sound call connect tone.
	Play tone when call ends	Set whether to sound call end tone.
	Allow alarm/ notification sounds in calls	Set whether to sound an alarm or notification sound.
	Ringtone	Set ringtones.
	Call vibration pattern	Set the vibration pattern of incoming call.
	Vibrate while ringing	Set whether to vibrate while ringing.
	Play sound for keypad taps	Sound operation sound when dialing keypad is tapped.
	Vibrate for keypad taps	Set whether to vibrate when dialing keypad is tapped.

Item		Description
Answering and ending calls	Read caller names aloud	Set whether to read caller names aloud.
	Answer automatically	Set whether to answer a call automatically after the time set passed when a call is receiving with connecting to a headset or a Bluetooth device.
	Press Volume up to answer calls	Set whether to answer call by pressing Volume UP key.
	Press Side key to end calls	Set whether to end call by pressing ▯[Side key]. • If sleep mode turns on during a call when "Press side key to end calls" is turned on, press ▯[Side key] to turn off sleep mode and then press ▯[Side key] to end the call.
Quick decline messages		→ P.66
Call display while using apps		Set the display method for call receiving when the other app is used.
Answering message Settings*3	Auto answer with message	→ P.62
	Play answering message after	→ P.62
	Language	→ P.62
	Recorded answering messages	→ P.62
Auto area code		Set the area code to add to the front of the phone number automatically when calling.
Suguden settings		→ P.43
Extension line service settings*4		These are settings for Office Link hold delivery and prefixes.

Item	Description
Make video calls using	Set the app used for a video call.
Other call settings	Set about search for places nearby, hide contacts without numbers, etc.
About Phone	Check the "Phone" app.

*1 Displayed only when there is recorded calls.
*2 Appears only when microSD card is attached.
*3 Not available for video call.
*4 Office Link is an internal phone service for corporate customers.

Setting network service

1 From the Home screen, → ⋮ → "Settings" → "Network service and roaming settings" → "Network service"

Item	Description
Voicemail service*	The service takes voice message of the other party for you if you cannot answer an incoming call.
Call forwarding service*	The service forwards a call if you cannot answer an incoming call.
Call waiting*	The service which allows you to put the current call on hold and answer a second call or make a call to another party.
Caller ID notification	Notify your phone number on the screen display of the other party when making a call.
Nuisance call blocking service	Save caller's number and set call rejection.
Caller ID display request service	Activate/deactivate Caller ID request.
Call notification	Activate/deactivate missed call notification.
English guidance	Set English guidance.
Remote operation settings	Activate/deactivate remote operation.
Public mode (power OFF) settings	While the terminal is OFF or in Airplane mode, a guidance message indicating that the receiver is in a place where power should be turned off is heard on the caller's terminal and then the call ends.

* Not available for video call.

Registering reason of rejection to send via SMS when rejecting call

The terminal can reject a reception of call and inform the caller of the reason of rejection by SMS.

- By default, there are three rejection messages registered.

1 From the Home screen, → ⋮ → "Settings" → "Quick decline messages"

2 Enter a rejection message → +

To edit registered rejection message

Tap a rejection message to edit → edit the rejection message → tap "Save".

To delete a rejection message

Tap − of messages to delete.

Blocking call receptions and SMS from specified phone number

You can register the phone number you want to block the calls and SMS and select number categories.

1 From the Home screen, → ⋮ → "Settings" → "Block numbers"

2 Enter a phone number to reject → +

- Tap "Blocked number categories" → mark the number category you want to block, you can collectively do blocking.
- Tap "Recents"/"Contacts" to select phone number from call history or contacts and register.

To delete the phone number is registered

Tap − of phone number to delete.

Phonebook

Registering to phonebook

Manage various contact information such as name, phone number or mail address using "docomo phonebook" application provided by DOCOMO.

- For using the cloud service on phonebook, "docomo phonebook" app is required.
- When you activate "docomo phonebook" for the first time (including after resetting the app), the screen about cloud functions appears and enable to set.

1 From the Home screen, → "docomo phonebook"

- By default, contacts list screen appears.

2

- An account type selection screen appears, follow the onscreen instructions.

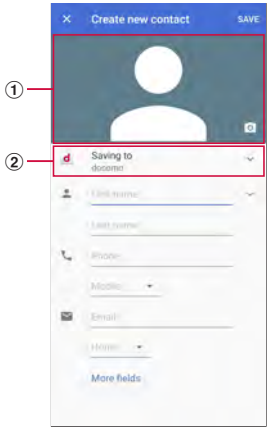

Edit contacts screen

① **Image field**
Tap to capture or select a photo.

② **Storage location**
Select an account.

3 Enter the required items

4 "SAVE"

- If the contact is not displayed, on the Contacts list screen, tap ☰ → account to display to change the display settings.

Checking/Editing a contact

1 From the Home screen, ⊞ → "docomo phonebook"

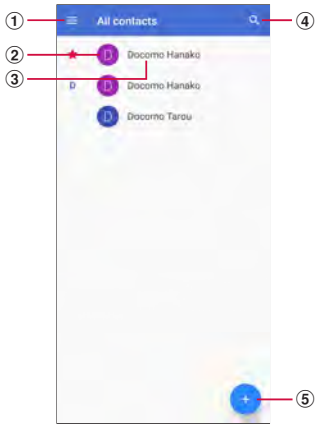

Contacts list screen

① **Menu**
- Display menu.

② **Photo set in the phonebook**

③ **Name registered in the phonebook**

④ **Search**
- Search contacts.

⑤ **Registering**
- Add contacts (P.66).

2 Tap the contact you want to check
- A contacts detail screen appears.
- Tap ✎ to edit a contact.

Making a call from phonebook

1 On the Contacts detail screen, tap the recipient you want to call

2

- Tap to create message or tap to make video call.
- To create a mail, tap a mail address and select an app.

Adding a contact to Favorites

1 Tap to on the contact detail screen.

- A star ( ) will be displayed in the index on the contact list screen.

Adding/Editing a Label (group)

1 On the Contacts list screen, → "Create label"

2 Select account → Enter a label name

3 "OK"

Adding a contact to a label (group)

1 On the Contacts list screen, → tap the label (group) to add

2 → tap the contact you want to check

- To delete contact from a label (group), tap a label (group) that includes a contact you want to delete → → "Remove contacts" → tap of contacts to delete.

Information

- Only contacts saved in the save location where the same account is can be added to the label (group).

Importing/Exporting contacts

You can import contacts between microSD card or nanoUIM card and the terminal, or send them as contact data (vCard).

1 On the Contacts list screen, → "Settings" → "Import"/"Export"

- Follow the onscreen instructions.

Setting docomo phonebook

1 On the Contacts list screen, → "Settings"

2 Select an item

- Follow the onscreen instructions.

Mail/Web browser

docomo mail

Send/receive the mail using docomo mail address (@docomo.ne.jp). Since sent and received mail is saved on the docomo mail servers, data can be transferred when doing model upgrades, or can be simply restored when terminals are lost. In addition, if a d ACCOUNT is being used, use the same mail address on several devices such as tablets and computer browsers, etc. to send and receive, and read mail.
For details of docomo mail, see NTT DOCOMO website.
https://www.nttdocomo.co.jp/service/docomo_mail/ (In Japanese only)

1 From the Home screen, ✉

- After that, follow the onscreen instructions.

+Message

You can send and receive text messages, images, videos, and stamps, etc. in a chat format to and from a mobile phone number.
Not only can you send messages to one person, but you can also send group messages to multiple people.
You can send and receive text (SMS) messages to people not using +Message via the +Message app.
In addition, you can exchange a message with a company by using an official account.
For details of +Message, from the Home screen, "+Message" → "MyPage" → "How to use" → see "Use guide" or visit NTT DOCOMO website.
https://www.nttdocomo.co.jp/service/plus_message/ (In Japanese only)

1 From the Home screen, "+Message"

- Tap 👤 from the bottom of the screen to display contacts list screen, tap 💬 to display message list screen.

■Contacts list screen

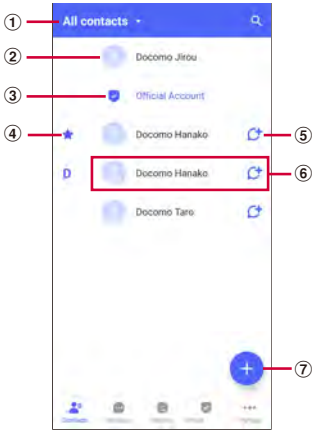

■Message list screen

① **Switch tab:** By tapping this tab, you can switch between displaying all of your contacts or only +Message users (contacts for which icon is displayed).
② **My profile:** Display your profile. Tap it to display and edit my profile.
③ **Official Account:** Tap it to display official account store.
④ **Contents of favorites:** Display the contacts that set to favorites on the top of the contacts list screen and under "Official account".
⑤ : This icon indicates that the contact is using +Message. You can exchange group messages, pictures, and stamps, etc. with contacts that have this icon displayed.
⑥ **Contacts:** Tap it to check the details of the contacts.
⑦ : Tap it to add the contacts.
⑧ **Profile picture:** Display the profile image of the other party. The image of the profile registered by the other person is preferentially displayed from the profile image registered in the contact.
⑨ **Message:** Tap it to display the message screen.
⑩ **Official account:** This is an account managed by the company. Display an icon with a rectangle of which corners are round.
⑪ : Display the sub menu.
- Read all: Mark all unread messages as read.
- Reorder messages: Reorder messages.

⑫ : This shows the authenticated mark to indicate the inspection from docomo has been passed.
⑬ : You can create new message and new group message.

Sending message

1 From the Home screen, "+Message"

2 "Message" from bottom of the screen → → "New message/New group message"
- Group message is a function for which multiple +Message users (contacts that have mark) can exchange messages.

3 Select sender
- If you send to recipient not registered to contacts, tap "Enter name and phone number" and input the phone number directly.
- If you send group message, select the contacts multiple and tap "OK".

4 Tap message input field and input →
- If the sender use +Message, you can send pictures, videos and stamps.

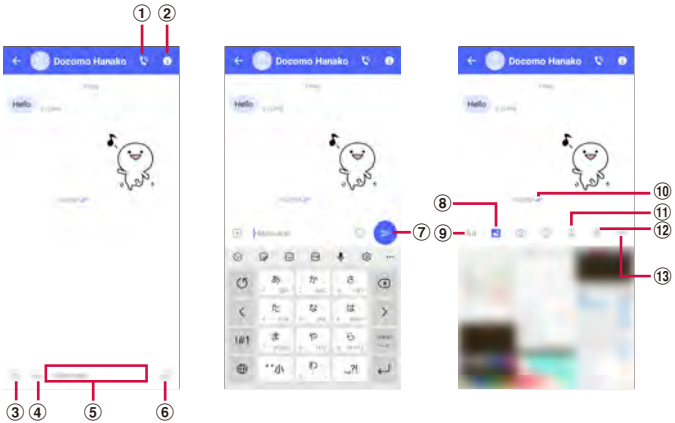

① : Launch phone app and make a call.
② : Display the sub menu.
- You can register the contacts or change notification settings, etc.

③ : Displays a share tray to send pictures, stamps, location information, etc.
- Display a share tray to use the functions such as image sending and voice recording.

④ : Tap to activate Camera. Touching and holding this icon enables you to send pictures you have taken as is.
⑤ Message input field: You can input the message.
⑥ : Switch to stamp selection screen.
⑦ : Send the entered message.
⑧ : Switch to image selection screen.
⑨ Aa : Switch to text input screen.
⑩ Display delivery status of the message.
: The recipient has read the message.
- You can only check the read status if both you and the recipient have the "Use message read function" setting turned on.

: The recipient has received the message.
(No icon display): The message has sent to the server.
× : Failed to send message.

⑪ : Switch to voice recording screen.
⑫ : Switch to map screen.
⑬ : You can select Contacts/Sketch/Gallery.

Information

About Short message service (SMS)

- You can also send/receive text messages to/from customers using overseas network operators. For available countries/overseas network operators, see NTT DOCOMO website.
- To send to users of overseas network operators, enter "+", "Country code" and then "the recipient mobile phone number". Enter the phone number without a leading "0", if any. You can also enter "010", "Country code" and "the recipient mobile phone number" to send messages.
- If "#" or "★" is included in the address, SMS cannot be sent.
- If 184/186 is attached to the phone number of the recipient, SMS cannot be sent.

About +Message

- To use the +Message app with international roaming, you need to set "ON" the setting to use +Message with international roaming in the +Message app (it is set "OFF" by default).
  Also turn on the terminal's data roaming setting.
- Even if you used +Message on your previous terminal before changing mobile phone models or carriers with MNP, you need to start the +Message app and agree to the +Message Terms of Service to receive messages.

Reading a message

Messages sent and received are displayed in a thread for each destination/sender.

1 From the Home screen, "+Message"

2 "Message" from the menu bottom of the screen → Select a thread you want to read
- For each function of sending message, see "Sending a message" (P.70).

Forwarding a message

1 From the Home screen, "+Message"

2 "Message" from bottom of the screen → Select a thread you want to read

3 Touch and hold the message to forward → ➡

4 Select the recipient and enter a message → ➢

Deleting a message

1 From the Home screen, "+Message"

2 "Message" from bottom of the screen → Select a thread you want to read

3 Touch and hold the Messages to delete → 🗑 → "Delete"
- Only the messages on this terminal are deleted, and the other party 's message is not deleted. Also, you cannot restore the message that has deleted.
- The garbage icon may not be displayed if you select the picture, etc. In that case, tap ⋮ → "Delete" → "Delete".

Deleting a thread

1 From the Home screen, "+Message"

2 "Message" from the menu bottom of the screen → Touch and hold a thread you want to delete

3 🗑 → "Delete"
- If you delete a thread of group message, you will leave the group.

Changing +Message settings

1 From the Home screen, "+Message"

2 "MyPage" from the menu bottom of the screen → "Settings"

3 Select an item

Item	Description
Message	Set about the message or backup and restore, etc.
Official Account	Set the notification sound of official account.
Photos and videos	Set the attach files such as pictures and videos, etc. when sending and receiving.

Item	Description
Screen display	Set theme color and background of the message screen.
Notification	Set notifications.
Privacy	Set pass code and privacy.
Others	You can configure user information transfer settings and initialize the +Message service.

Using official account

1 From the Home screen, "+Message"

2 "Official Account" from the menu bottom of the screen

3 Tap the account to use on the "Official Account" screen

4 Mark on "I have read and accepted the Terms and conditions and will use this Official Account"

5 "Start"

Email

You can set a POP3-compatible or IMAP-compatible Email account provided by a general service provider to send/receive email.

Setting Email account

When you enter mail address and password, Email account settings are downloaded and set automatically.

- If settings cannot be made automatically or you make settings manually, you need to enter settings for sending and receiving. Prepare the required information of Email account settings in advance.
- The steps or the icon on the top left of the screen vary depending on the email accounts which are set.

1 From the Home screen, ⊞→ "Outlook"
- Follow the onscreen instructions.

Creating and sending an email

1 From the Home screen, ⊞→ "Outlook"

2
- The email creation screen appears.

3 In "To" field, enter a mail address to send
- To add Cc/Bcc, tap ∨ to enter an address in the Cc field or Bcc field.

4 Enter a subject in the "Subject" field

5 Enter a text in the message field

6

Information

- If you send/receive emails to/from a PC or other device, some pictograms, HTML mails, etc. may not be displayed correctly depending on the usage environment.

Checking received emails

1 From the Home screen, ⊞→ "Outlook"

2 Slide Email list downward

3 Tap an email you want to read
- A message screen appears.

Information

- → → "Notifications" → "Notifications" to set the notifications for Email.
- Tap a sender and tap "ADD TO CONTACTS" on the message screen to register to the Contacts.
- When data is attached, appears on the Email list screen. Tap a file name to check attached data.
- Tap "Filter" enables you to filter the email that is displayed.
- Tap to search the email.
- Tap to create the schedule.
- Tap on the message screen to display the items. Follow the onscreen instructions.

Changing Email settings

Account setting

1 From the Home screen, ⊞→ "Outlook"

2 → → Tap an account you want to set

3 Tap an item you want to set

Basic settings

1 From the Home screen, ⊞→ "Outlook"

2 →

3 Tap an item you want to set

Information

- Tap "Sync contacts" to set whether to sync with contacts app.
- For details on Outlook, tap → → "Help & feedback" to refer.

Gmail

You can use the email services provided by Google or by major Internet service providers (ISPs).

- You must sign in Google account to use Gmail (P.31). When a setting screen of email address appears, perform the settings according to onscreen instructions and then operate it.
- For details on Gmail, from the Gmail screen, tap ≡ → "Help & feedback" to refer.

Opening Gmail

1 From the Home screen, "Google" → "Gmail"
- If the screen describing new Gmail functions appears, follow the instructions on the screen.

2 Tap an email you want to read
- Content of the selected email appears.

Creating and sending Gmail

1 From the Home screen, "Google" → "Gmail"

2 ✎
- The Email creation screen appears.

3 Enter each item → ▷

Early Warning "Area Mail"

Area Mail is a service which the emergency earthquake flash reports and tsunami warnings and special alarm concerning weather, etc. distributed by the Meteorological Agency and the disaster and evacuation information distributed by national and local governments can be received without it being affected by telephone line congestion.

- You can receive Area Mails for free without subscriptions.
- Area Mail cannot be received in the following case.
  - When the power is off
  - During International roaming
  - During Airplane mode
  - When software is being updated
  - When the PIN code input screen is displayed
  - During a voice call (except for VoLTE voice calls)

Setting Early Warning "Area Mail"

When you receive an Area Mail, the details notification screen is displayed and you are alerted by a special buzzer or ringtone and vibration.

- A special buzzer and ringtone cannot be changed.

1 Receive Area Mails automatically

2 When an Area Mail is received, a special buzzer or the ringtone sounds and the icon is displayed then the contents of Area Mail is displayed

Checking received Area Mail later

1 From the Home screen, ⊞ → "Disaster kit"

2 "Early Warning "Area Mail" → "Area Mail" → Select the Area Mail from the list of Area Mail

Deleting an Area Mail

- Deleted Area Mails cannot be restored.

1 From the Home screen, ⊞ → "Disaster kit"

2 "Early Warning "Area Mail" → "Area Mail" → Touch and hold an Area Mail on the list of Area Mail

3 "Delete broadcast" → "Delete"

Web browser

Using web browser

Using web browser, you can view web pages as PCs.
On the terminal, web browser can be used via a packet communication or Wi-Fi connection.

- Some web pages may not be displayed or may not appear properly.

Activating web browser

1 From the Home screen, ⊞ → "Internet"
- Web page is displayed.

Information

- When the address bar or icon is not displayed, flick/swipe down the screen to display it.
- On the browser screen, you can zoom in/zoom out using pinching out/pinching in, scroll the screen using scrolling/flicking or copy the text using touching and holding it.

Opening new tab

1 From the Home screen, ⊞ → "Internet"

2 ⧉
- Tab manager appears.

3 "New tab"

4 Enter search URL or keyword you want to search in the search box at the top of screen
- To close tabs, tap ⧉ → ⊗ in the tab you want to close.

Opening new secret tab

View with the browser without history of browser or search remained.
All of bookmarks and webpages saved in secret mode is not displayed when the secret mode is disabled.

1 From the Home screen, ⊞ → "Internet"

2 ⧉
- Tab manager appears.

3 "Turn on Secret mode"

4 "Start"

- From the tab manager screen, tap ⋮ → "Secret mode settings" → "Use password" to set password when you use the secret mode.

Information

- To turn off the secret mode, tap "Turn off Secret mode" on the tab manager screen
- For windows viewing in secret mode, address bar, etc. appears in gray.
- Web pages viewed in secret tabs will not appear in the browser or search history. Cookies will not be stored in the terminal while secret mode. However, files downloaded or bookmarked web pages viewing in secret tab will be stored.

Managing history and bookmarks

Viewing web pages from the history

1 From the Home screen, ⊞ → "Internet"

2 ☰ → "History"

3 Tap a web page you want to view

Adding a web page to Bookmarks

1 From the Home screen, ⊞ → "Internet"

2 Display a web page to add a bookmark → ☆

Viewing web pages from Bookmarks

1 From the Home screen, ⊞ → "Internet"

2 ☆

- A bookmark list appears.

3 Tap a web page you want to view

Menu of Bookmarks/History/Saved pages

Touch and hold bookmarks/history/saved pages to display the menu on the bottom of the screen. Follow the onscreen instructions.

Setting web browser

1 From the Home screen, ⊞ → "Internet"

2 ☰ → "Settings"

3 Tap an item you want to set

Camera/Gallery

Camera

Before using Camera

- Though the camera is manufactured using extremely accurate technology, some dots and lines may always be displayed to be lighter or darker than you expect. Images shot under very low light intensity contain increased noise such as white lines or random dots, but it is not a malfunction.
- Note that a stripe pattern may appear on the screen when Camera is activated, but it is not a malfunction.
- Still images or videos shot by Camera may differ from actual subjects in color and brightness.
- If the lens is contaminated with fingerprints or skin oil, you cannot shoot clear still images/videos. Use a soft cloth to remove any such contaminants on the lens before taking photos.
- When shooting, hold the terminal firmly with your hand not to move. Moving the terminal when shooting may cause blur shot images.
- Do not cover the lens with your finger or hair when shooting.
- Using Camera consumes much power of battery. Note that if you shoot with low battery, the screen may become dark or a shot image may be blurred.
- If you use Camera for a long time such as continuous shooting of still images and long-time shooting of videos, the terminal may become hot and Camera may be terminated automatically, but it is not a malfunction. Please use after a while.
- Do not remove microSD card forcibly immediately after capturing. It may not save correctly or may cause data corruption. Turn off this terminal before removing microSD card.
- Minor distortion may occur in wide-angle photos or videos and does not indicate device performance problems.
- Even in Manner mode (Vibrate/Mute), shutter sound for still image shooting and start/stop sound of shooting video sounds.

Copyrights and portrait rights
Avoid copyright infringements when you handle photos taken with your terminal, e.g. copy/alter/edit except for the purpose of personal use.
Please refrain from unauthorized use of portraits or names of other persons that may infringe on portrait rights. Note that capturing or recording a stage performance, entertainment or exhibition may be prohibited even if for personal use.
If you cause the public any trouble using the terminal, you may be punished under law or regulations (for example, nuisance prevention ordinance).
Please be considerate of the privacy of individuals around you when taking and sending photos using camera-equipped mobile phones.

Shooting screen

1 From the Home screen, "Camera"

- For the first time activation, a change save destination screen appears when a microSD card is installed. Confirm the contents and follow the onscreen instructions.
- If a screen related to a location tag appears, confirm the content and follow the instructions on the screen.
- According to the setting status, the icon displayed may differ.

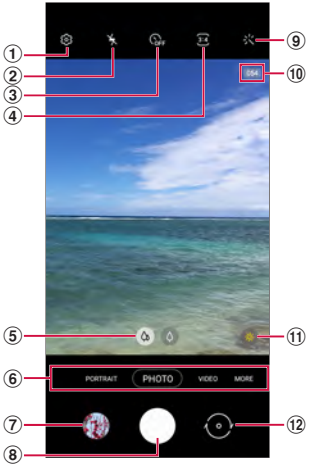

Still image shooting screen

① **Settings**
- Tap it to display settings menu. → P.80

② **Set flash**
- Switch Flash to Auto/On/Off.

③ **Timer**
- Set self-timer.

④ **Ratio**
- You can change the aspect ratio of the screen display.

⑤ **Zoom**

⑥ **Switch camera mode → P.80**

⑦ **Thumbnail**
- Tap it to activate Gallery.

⑧ **Shutter (still image shooting) button → P.79**
- Drag the shutter (still image shooting) button up to add a floating shutter button. → P.80

⑨ **Filter**
- You can create a filter based on a color tone of the selected photo.

⑩ **Shootable number of images, HDR**
- Shootable number of images is estimate value. Number may not change even after shooting.

⑪ **Scene optimizer → P.82**

⑫ **Switch between rear camera and front camera**
- Take a selfie.
- You can also swipe the screen up and down to switch camera on the shooting screen.

Information

- If no operation is performed with Camera activated for a certain period of time, Camera ends.
- Tap the shooting screen to display a focus icon and a bar to adjust the brightness.
- You can also boot camera by pressing the [Side key] twice.
- Some feature of camera app may not be able to use for front camera.

Shooting still images

1 From the Home screen, "Camera"

2 Point Camera at an object
- You can adjust zooming by pinching out/in on the display.

3 ◘
- Shutter sound sounds and then an image is shot.
- The shot still images are automatically saved.
- Drag ◘ to the USB terminal side and touch and hold when shooting to take up to 30 pictures.
- Touch and hold ◘ to shoot video. Recording stops when you release hand from the button.

Information

- You can also shoot still images by pressing Volume UP key/Volume DOWN key (P.80).
- Instead of tapping ◘ on the front camera capture screen, you can also show your palm to the front camera to take a picture (P.80).
- Pictures captured continuously are saved in internal storage even if save destination is set "SD card".

Shooting videos

1 From the Home screen, "Camera"

2 "VIDEO"
- You can also flick to the left to switch camera on the shooting screen.

3 Point Camera at an object → ◉
- Start sound sounds and shooting video starts.
- You can adjust zooming by pinching out/in on the display.
- Tap ◘ to shoot still images while shooting video.
- To pause the shooting, tap ⏸. To resume the shooting, tap ● during pause.

4 To stop shooting, ■
- Stop sound sounds and video is saved automatically.

Information

- Before shooting video, check if the memory space is enough.
- If you use the zoom function for a long time while shooting videos, video resolution may be decreased to prevent the terminal overheating.
- You can also shoot/stop recording by pressing Volume UP key/ Volume DOWN key (P.80).

Setting Camera

1 From the Home screen, "Camera"

2 ⚙

- There are items that cannot be set from shooting mode.

Item	Description
Scene optimizer	Set whether to display the "Scene optimizer" button to the capture screen and whether to use the intelligent features. → P.82
Scan QR codes	Set whether to scan QR code.
Swipe Shutter button to	Set the operation when the shutter (shooting still images) button is swiped to the USB terminal side. • Selecting "Create GIF" enables you to create a GIF video while swiping to touch and hold the USB terminal side.
HEIF pictures	Save images in HEIF format and save the data capacity.
Save selfies as previewed	Save the selfie photo like a preview without reversing.
High efficiency videos	Save HEVC format and save video data capacity. HEVC format videos cannot be played or shared on other devices.
Video stabilization	Set ON/OFF of the image stabilizer for video shooting.
Auto HDR	Set whether to use HDR.
Grid lines	Display grid for shooting range on the shooting screen.
Location tags	Set whether to add location information. • To receive GPS signal correctly, do not use in a poor reception area. → P.88 • When uploading shot still images, added location information may be tracked by third parties. To avoid leaking location information, set to OFF.
Shooting methods	Set the operation when volume UP key/volume DOWN key is pressed or set ON/OFF of floating shutter button, show palm, etc.
Settings to keep	Set whether to start camera with the same mode and filters as last time.
Storage location*	Select a saving location of shot still image/video.
Watermark	Add watermark to the left bottom area of the photo.
Reset settings	Reset camera settings.
Contact us	You can use Galaxy Members.
About Camera	Display the version of camera app.

* Appears only when microSD card is attached.

3 After setting is completed, <

Switching shooting mode

1 From the Home screen, "Camera"

2 Select camera modes

Item	Description
PORTRAIT	You can shoot telephotographic photos with objects focused or photos with effects blurred background. → P.81
PHOTO	Adjust lithographic exposure automatically to optimize color tone and brightness and shoot.
VIDEO	Shoot videos. → P.79

Item		Description
MORE	AR ZONE	You can use AR functions. → P.81
	AR DOODLE	→ P.82
	PRO	Manually adjust ISO sensitivity, white balance, and exposure value, etc.
	PANORAMA	Move the terminal horizontally or vertically to shoot panorama photo. • Slowly move the camera in a direction not to get the white frame out of the white guideline when shooting. • Shooting objects in front of a plain colored wall or in empty space may fail.
	FOOD	Selecting the highlighted area and changing color tone to shoot photo.
	NIGHT	You can take bright pictures even in very dark places.
	HYPERLAPSE	Create your own time lapse video by recording at various speeds. You can adjust the speed depending on the scene being recorded and the movement of the terminal. • Tap to create time lapse video for night photography.

Shooting by portrait

You can take person's photo with blurred background. Portrait is also available on the front camera.

1. From the Home screen, "Camera"
2. "PORTRAIT"
3. Adjust background blur with the adjustment bar, etc.
4. Shoot
   - The shot still images are automatically saved.

Information

- Keep the terminal and the subject away and shoot it.
- Use this feature in a place that has sufficient light.
- You can change effects, such as blurring the background post capture, for images captured with Portrait by tapping "Change background effect" in "Gallery".
- The background blur may not be applied properly in the following conditions.
  - The device or the subject is moving
  - The subject is thin or transparent
  - The subject has a similar color to the background
  - The subject or background is plain

Using AR zone

You can use AR Emoji or AR doodle, etc.

Editing AR Emoji

1. From the Home screen, "Camera"
2. "MORE" → "AR ZONE" → "AR Emoji Studio"
   - Follow the onscreen instructions to edit the AR Emoji.

Creating AR Emoji Stickers

1 From the Home screen, "Camera"

2 "MORE" → "AR ZONE" → "AR Emoji Stickers"
- Follow the onscreen instructions to create AR Emoji Stickers.

Information
- To delete created AR Emoji Stickers, tap ⋮ → "Delete stickers" → select stickers to delete → "Delete" → "Delete" on the "AR Emoji Stickers" screen.

Using AR Doodle

Draw by hand while tracking an object in the air or person that was recognized, and shoot a video of that.

1 From the Home screen, "Camera"

2 "MORE" → "AR DOODLE"

3 ⊙

4 Draw by handwriting

5 ■
- Save the movie drew by handwriting.

Information
- To use the function with rear camera, you need to install a separate app for AR.

Using Deco Pic

Take a selfie with decoration.

1 From the Home screen, "Camera"

2 "MORE" → "AR ZONE" → "Deco Pic"
- Follow the onscreen instructions.

Using Intelligent functions

Using Scene optimizer

The camera can automatically detect the object to be shot, automatically adjust the picture color settings, and shoot the optimal picture.

1 From the Home screen, "Camera"

2 ✨

Information
- For the icon of "Scene optimizer", it is displayed depending on the detected shooting target.
- This function is effective only when the camera mode is "PHOTO".

Gallery

You can view or organize still images/videos saved to the terminal, etc.

1 From the Home screen, "Gallery"
- A data list screen arranged by shooting date appears.
- Tap ⋮ to activate camera and to display function menu of each data list screen.
- Tap ☰ to display ordered by category, share the album, set the gallery, etc.

2 Tap the data
- Tap 🗑 → "Move to Trash" to move the data to the trash box and the data is deleted completely after the certain period.

Viewing still image

1 On the data list screen, tap a still image to display
- The still image appears.
- To switch data, scroll the screen to the left or right.

Information
- Flick up the screen on the still image display screen → tap > to check the detail of the data.

Playing video

1 On the data list screen, tap a video to play
- Video is played.
- To switch data, scroll the screen to the left or right.

Information
- Flick up the screen on the video display screen → tap > to check the detail of the data.

Editing video

You can trim the video.

1 On the data list screen, tap a video to edit
- To switch data, scroll the screen to the left or right.

2 ✎
- Follow the onscreen instructions.

Apps

dmenu

In dmenu, you can quickly access DOCOMO recommended sites and useful apps.

1 From the Home screen, "dメニュー (dmenu)"
- The browser is booted and "dmenu" is displayed.

Information

- Check that there is a connection with a network, when you use dmenu (P.39).
- For connecting dmenu and downloading apps introduced in dmenu, a packet communication charge is applied separately. Some downloaded apps automatically perform packet communications.
- Apps introduced in dmenu may include charged ones.

dmarket

Sale of digital content, such as music, videos, books, shopping and travel sites, and various other services are provided.

1 From the Home screen, "dmarket"

Information

- For details on dmarket, refer to following website.
  https://d.dmkt-sp.jp/common/about/index.html (In Japanese only)

Play Store

To use Google Play, you need to set a Google account (P.31).

Installing an app

1. From the Home screen, "Play Store"
2. Search for an app you want to download, then tap it → Check details
3. For free apps, "Install", for charged ones, tap the price → Follow the onscreen instructions

Information

- By agreeing to install the app, you will be responsible for using the app. Be very cautious about applications that have access to many functions or a significant amount of data.
- Be sure to check the security of applications, and then install them at your own risk. The terminal may be infected with a virus and the data may be damaged.
- NTT DOCOMO is not liable for any malfunction, self-or third-party disadvantage due to apps provided by a third party including apps provided by Google LLC installed by you.
- For each app provided by a third party including apps provided by Google LLC that you installed from the Play Store, contact each provider.
- Some apps automatically perform packet communications. Packet communication is kept active unless you disconnect it or the time-out is occurred.
- For details on Google Play, tap the icon at the upper right of the Play Store screen → "Help & feedback" to refer.
- You can set the auto update of apps from the account icon at the upper right of the screen → "Settings".
- For instructions on uninstalling app, see "Uninstalling the app" (P.47).

Galaxy Store

You can easily download a lot of recommended apps using Galaxy Store.

Connecting to Galaxy Store

1. From the Home screen, ⊞ → "Galaxy Store"
2. Search an app you want to use and download it

Information

- Galaxy Store may not be available depending on the country or region. For details, refer to the support page in the Galaxy Store website on a PC.

Osaifu-Keitai

The function allows you to use "Osaifu-Keitai compatible service" for payment or point card by just holding over a reader in a store, etc. You can save electronic money, point, etc. to IC card and check deposit or balance of electronic money, or point value. Also, locking Osaifu-Keitai function, take measures against stolen or misplaced by locking Osaifu-Keitai.
For details on Osaifu-Keitai, refer to NTT DOCOMO website.

- A setting from the dedicated website or app is required to use Osaifu-Keitai compatible services.
- The data in the IC card* may be lost or altered from malfunction of the terminal (when we repair your terminal etc., as we cannot repair it with data remained, you are required to erase the data by yourself). For support such as reissuance, restoration, temporary preservation or transfer of data, contact Osaifu-Keitai compatible service providers. For important data, be sure to use a service with backup service.
- If the data in the IC card is lost, altered or damaged by any means related to Osaifu-Keitai compatible service such as malfunction or model change, DOCOMO is not liable for the loss of data.
- If the terminal is stolen or misplaced, immediately contact DOCOMO or Osaifu-Keitai compatible service provider for an advice for methods of such as suspension of use.

* Data saved to IC card in the Osaifu-Keitai compatible device

Using "Osaifu-Keitai compatible service"

To use Osaifu-Keitai compatible service, set up the service on the Osaifu-Keitai app.

1 From the Home screen, ⊞ → "Osaifu-Keitai"
- When Osaifu-Keitai initial setting is not completed, initial setting screen appears. Follow the onscreen instructions.

2 Tap service you want to use

3 Configure settings for the service
- Set with the app or website for the service.

4 Hold ⟲ mark over the reader

Information

- You can hold mark over the reader without activating Osaifu-Keitai compatible app.
- Powering on the terminal is not necessary, but the terminal remains powered off for a long time or battery level is low or a certain period of time after turning on the power, the function may not be available.
- As the communications necessary to provide Osaifu-Keitai compatible services run in the background regardless of the terminal's Power saving mode (P.112) or Data saver settings (P.99), Osaifu-Keitai compatible apps may incur packet communication fees.
- After turning on the terminal and restarting or software updating, release the screen lock and hold it over the reader, and then use the Osaifu-Keitai compatible service.
- Please note that some functions may not be available depending on the Osaifu-Keitai compatible service you are using for communication other than sp-mode.
  ahamo plan is not supported sp-mode.

Notes on holding over the device

Please note the following when holding the terminal over an IC card reader or NFC module equipped device.

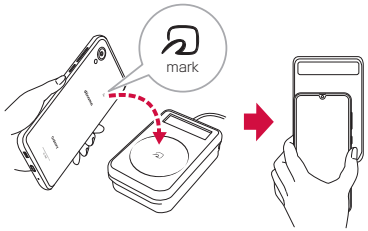

- Bring the mark close to the device slowly, not strike strongly.
- Hold the mark over the device at the center horizontally. If scanning is failed even with it held in front of the center of the scanner, slightly lift up the terminal, or move it backwards/forwards or to the left/right.
- When there is a metal object between the mark and the device, reading may fail. Putting the terminal into a case or cover may affect communication. In that case, remove the case or cover.

Locking Osaifu-Keitai function

Use "NFC/Osaifu-Keitai Lock" to restrict Osaifu-Keitai function or the services. NFC/Osaifu-Keitai lock is different from SIM card lock.

1 From the Home screen, → "Osaifu-Keitai"

2 → "NFC/Osaifu-Keitai Lock ON/OFF"

- The lock of this function is linked with the screen lock, and there is no need to set a password when setting/unlocking the lock.
- To unlock, tap → "NFC/Osaifu-Keitai Lock ON/OFF".

Information

- Be careful about remaining battery level because "NFC/Osaifu-Keitai Lock ON/OFF" cannot be turned OFF if the battery runs out while using "NFC/Osaifu-Keitai Lock". If the battery runs out, charge the battery and then turn "NFC/Osaifu-Keitai Lock ON/OFF" OFF.
- To use Osaifu-Keitai menu while using "NFC/Osaifu-Keitai Lock", turn "NFC/Osaifu-Keitai Lock ON/OFF" OFF.
- For Omakase lock set in My docomo, unlock it via My docomo. When Omakase lock is set, appears on the status bar.

iD application

"iD" is electric money provided by docomo. You can enjoy shopping simply and conveniently only by holding Osaifu-Keitai set with "iD" over the IC card reader in stores. Since multiple card information can be set, you can use them separately according to the benefits, etc.

- To use iD with Osaifu-Keitai, setting with iD app, etc. is required. For handling of issuing, Please contact to each credit card company.
- The charges required for iD service (including the annual charge) vary by card issuer.
- The packet communication charge for overseas use differs from the one in Japan.
- For details on iD, refer to iD website (https://id-credit.com/) (In Japanese only).

GPS/Navigation

Enabling location information

If you use an app that uses location information, you need to enable GPS function in advance.

1 From the Home screen, ⊞ → "Settings" → "Location"

2 ⊂⊃ → "Agree"

Precautions on using GPS

- DOCOMO is not liable for any damage caused by abnormality of the system.
- Note that DOCOMO shall have no liabilities for any purely economic loss including those due to missing a chance to check the measurement (communication) results because of external factors (including the running out of the battery), such as a failure, malfunction, or any other problems of the terminal or the power failure.
- You cannot use the terminal as a navigation device for an aircraft, vehicle, and person. Note that DOCOMO shall have no liabilities whatsoever even if you suffer damage or loss while performing a navigation using the location information.
- You cannot use the terminal as a high-accuracy measurement GPS. Note that DOCOMO shall have no liabilities whatsoever even if you suffer damage or loss due to a deviation of the location information.
- GPS is a service operated by the USA Department of Defense, so the GPS radio wave condition may be controlled (accuracy degraded, radio wave suspended, etc.) for reasons of US national security. And, wave conditions differ by satellite locations; therefore, positioning operations in the same location under the same environmental conditions may not yield the same result.
- Some wireless communications products (mobile phone, data detectors and some others) block satellite signals and also cause instability of signal reception.
- Some map displays based on location information (latitude/longitude information) may be not accurate due to some countries or region's regulations.

Where radio waves are difficult to receive

Note that radio waves may not be received or it may be difficult to receive radio waves in the following conditions, since GPS uses radio waves from a satellite.

- Inside or immediately under a building
- Inside a basement or tunnel, and below the ground or water
- Inside a bag or box
- Building area or residential area
- Inside or under a thick covering of trees
- Near a high-voltage cable
- In a car, inside a train compartment
- Bad weather such as heavy rain or snow
- When there are obstructions (people or objects) near the terminal

Using Google Maps

By using Google Maps, you can search for the current location or other locations, or obtain guide information to destination.

- To use Google Maps, enable data connection (5G/4G/3G/GSM) or connect to Wi-Fi.
- Google Maps does not cover the whole world or region.

Opening Google Maps

1 From the Home screen, "Google" → "Maps"
- When the message screen appears, follow the onscreen instructions.

2 Enter area name, etc. in the search box

Clock

You can use Alarm, World clock, Stopwatch or Timer.

1 From the Home screen, ⊞ → "Clock"

2 Tap a tab at bottom of the screen
- Tapping switches screen of each function.

Using Alarm

1 On the "Alarm" screen, + → Set each item → "Save"
- Tap number of hour/minute to display 3x4 keyboard.

2 To stop alarm, drag ⊗ out of the displayed circle
- When snooze is set, tap "Snooze" and alarm sounds again after the set time has elapsed. Tap ⊞ / ⊟ to change snooze interval.
- If "Alarm" window appears, tap "Dismiss".

Information

- Snooze is a function which stops the alarm and sets it to ring again at a short time later.
- To delete registered alarm, on the "Alarm" screen, touch and hold the alarm to delete → "Delete".
- To toggle the alarm OFF, tap ◐ to ○.

Using World clock

You can check the date and time of the cities and time difference that registered with a list.

1 On the "World clock" screen, + → tap a registering city → "Add"
- To register city based on the current location, tap ⊙ → tap a city.

Information

- To search via city/country name, from the "Add city" screen, 🔍 → enter the city name or country name in the search box that you want to search.
- To delete registered city, on the "World clock" screen, touch and hold the city you want to delete → tap "Delete".
- Tap ⋮ → "Time zone converter" to use time zone converter.

Using Stopwatch

1 On the "Stopwatch" screen, "Start"
- Measurement starts.
- To measure lap time, tap "Lap".

2 To stop the measurement, "Stop"
- To restart the measurement, tap "Resume" and tap "Reset" to measure again.

Using Timer

1 On the "Timer" screen, set hour, minute, and second
- Tap hour/minute/second to display 3x4 keyboard.

2 "Start"
- The timer starts.

3 To stop time-up notification sound, drag out of the displayed circle
- If "Timer" window appears, tap "Dismiss".
- Tap "Restart", the timer restarts with same setting.

Information

- Tap + on the timer screen enables you to add the preset timer for the frequently used time.

Calendar

Display Calendar to register event and task.

1 From the Home screen, → "Calendar"

2 Double-tap a day to register an event

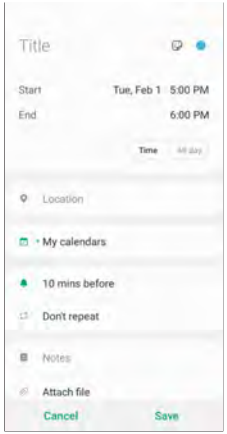

Add event screen

3 Set items → "Save"

Galaxy Notes

You can input text and draw pictures and create notes. You can also add images or PDF to the notes, write down memos on them, and then save them.

Create the note

1 From the Home screen, ⊞ → "Galaxy Notes"
- A list screen appears.

2

3 Create notes → <

■ Edit screen

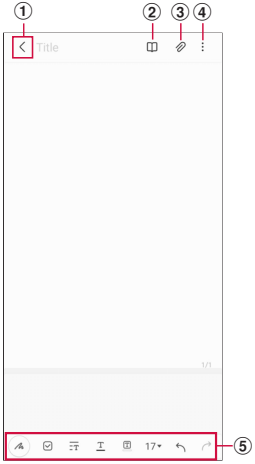

Edit screen

① Display a list screen
② Viewing mode
③ Add a file
- Attach the picture, sound or audio.

④ Menu
⑤ Tool bar

■ List screen

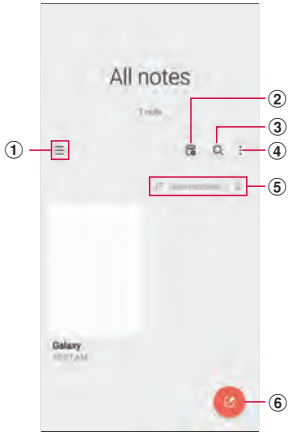

List screen

① You can change the view type of note
② Load PDF
③ Search inside the note
④ Display menu of note
⑤ Rearrange notes
⑥ Create a note

Recording voice while writing a memo

1 On the edit screen, 📎 → "Voice recording"
- Recording starts.

2 ■
- Recording ends.

3 < → ▶
- Recorded file is played.
- Tap any point on the memo to jump to the recorded part.

Voice Recorder

Voice Recorder

1 From the Home screen, ⊞ → "Voice Recorder"

2 ●
- Recording starts.

3 ■
- Recording stops. Input the file name and tap "Save" to save the data recorded.

Playing voice sound

1 From the Home screen, ⊞ → "Voice Recorder"

2 "List"
- A recorded data list screen appears.

3 Tap data you want to play
- Voice sound is played.

Menu of Voice Recorder

When you tap ⋮ on the recording screen recorded data list screen/playback screen the items will be displayed. Follow the onscreen instructions.

Calculator

You can perform four arithmetic operations (+, −, ×, ÷), percent calculus, functional calculus, etc.

1 From the Home screen, ⊞→ "Calculator"
- When the auto screen rotation is ON, turning the terminal sideways switches to the alpha calculator. Alternatively, when the auto screen rotation is OFF, tap ⊞ to switch to the alpha calculator.
- Tap ⊞ to use unit converter.

docomo Data Copy

Using "docomo Data Copy", you can copy the data saved in the terminal to another terminal, or back up/restore the data.
Use this app for transferring data when you change the model, or backing up your important data at regular intervals.

- Depending on the device, OS and file type, you may not be able to correctly copy, backup, or restore data.
- Phonebook data available to copy or back up is phonebook saved in docomo's account and the terminal.
- Copy, Backup or restoration may not be performed if the battery level is low.
- For details of docomo Data Copy, see NTT DOCOMO website.

Data Transfer

You can copy your data such as phonebook, images, etc. to another terminal with one-to-one direct communication, not using the Internet. Activate "Data Copy" of both the source terminal and the destination terminal, and line them up before use.

1 From the Home screen, ⊞ → "Data Copy" → "Data transfer"
- Follow the onscreen instructions.
- Installing this app is required for both the source terminal and the destination terminal. Available for download from NTT DOCOMO website, if it is not installed yet.

Backup and restore

You can move and back up and restore phonebook entries, images, etc. using microSD card.

- Do not remove microSD card from the terminal while backing up or restoring data. Data may be damaged.
- The phonebook without registered the name cannot be backed up.
- Backup or restore may not be performed if the terminal or microSD card does not have enough memory space.
- This app only backs up the data such as still images and video, etc. which are stored on the terminal. Data which is stored on microSD cards will not be backed up.
- When the screen is locked or the terminal is set to save power mode, the scheduled backup will not run at the set time. It will run at the next possible time.

Backup

Back up data such as phonebook entries, media files, etc. to the terminal.

1 From the Home screen, ⊞ → "Data Copy" → "Backup & Restore"

2 "Backup" → "Start backup" → "BACKUP"
- Selected data is stored in microSD card.

3 "Back to top"

Restoring

Restore data such as phonebook entries, media files, etc. to the terminal.

1 From the Home screen, ⊞ → "Data Copy" → "Backup & Restore"

2 "Restore" → "next" → "Restore" → "RESTORE"
- Selected data is restored to the terminal.

3 "Back to top"
- If you have not set periodical backup setting schedule, "Set a backup schedule" is displayed, follow the onscreen instructions.

Copying phonebook data to docomo account

Copy phonebook data stored on a Google account and the terminal to docomo account.

1 From the Home screen, ⊞ → "Data Copy" → "Backup & Restore"

2 "Phonebook account copy" → "Select" on the phonebook entry to be copied → "OVERWRITE"/"ADD"
- Copied data is saved to docomo account.

3 "OK"

S Health

Support your health management, such as managing your exercises using pedometer, recording the amount of calories you spend, recording sleeping times.

- To backup data to the server, you need to set a Galaxy Account. If the setting screen of Galaxy Account appears, follow the on-screen instructions and make settings before using.

1 From the Home screen, ⊞ → "S Health"

- S Health screen appears.

2 Tap an item

Settings

Setting menu

1 From the Home screen, ⊞ → "Settings"

2 Select a menu item and make settings

Item	Description
Connections	→ P.96
Sounds and vibration	→ P.101
Notifications	→ P.102
Display	→ P.103
Wallpaper	→ P.104
Themes	→ P.105
Lock screen	→ P.105
Biometrics and security	→ P.106
Privacy	→ P.109
Location	→ P.88
docomo service/cloud	→ P.109
Google	→ P.110
Accounts and backup	→ P.111
Advanced features	→ P.35
Digital Wellbeing and parental controls	→ P.112
Battery and device care	→ P.112
Apps	→ P.114
General management	→ P.115
Accessibility	→ P.116
Software update	→ P.119
About phone	→ P.119

Information

- Tap Q to enter a keyword in the search box to search within the settings and check the setting values.
- Depending on the usage status of the terminal, information may be displayed above "Connections".

Connections

1 From the Home screen, ⊞ → "Setting" → "Connections"

2 Select the item and set

Item	Description
Wi-Fi	→ P.96
Bluetooth	→ P.122
NFC/Osaifu-Keitai settings	→ P.98
Airplane mode	→ P.98
Mobile networks	→ P.98
Data usage	→ P.99
Tethering	→ P.99
More connection settings	→ P.100

Wi-Fi

You can use Wi-Fi function of the terminal to connect to wireless access point of your home or company network. Also, you can connect to Public wireless LAN service access point to use mails and Internet.

■ Reception interference caused by Bluetooth devices

The terminal's wireless LAN device and Bluetooth devices use the same frequency band (2.4 GHz). If you use the terminal near a Bluetooth device, reception interference may occur or the communication speed may become lower. In these cases, do the following:

1. Keep the wireless LAN device over approximately 20 m away from a Bluetooth device.
2. Within approximately 20 m, turn off the Bluetooth device.

Information

- Packet communication can also be used even when Wi-Fi function is ON. However, Wi-Fi will be used first during Wi-Fi connection. If Wi-Fi network is disconnected, network is automatically switched to 5G/4G/3G/GSM. Be noticed that packet communication charge is applied if you keep using the network after toggling.
- When connection to the network that cannot connect to the Internet or to Wi-Fi network that requires user authentication and the user authentication is unestablished, is displayed. In that case, the communication may carry out using a mobile network rather than a Wi-Fi network.
  To perform Wi-Fi communications via these kinds of access points, do the following.
  - For networks that are not connected to the Internet: turn "Switch to mobile data" to OFF (P.97)
- Setting d ACCOUNT is required for using docomo service via Wi-Fi. From the Home screen, ⊞ → "Settings" → "docomo service/cloud" → "d ACCOUNT setting".

■ Enabling Wi-Fi and connecting to network

1 From the Home screen, ⊞ → "Settings" → "Connections" → "Wi-Fi"

2

- Scanning available Wi-Fi networks starts automatically and a list is displayed.

3 Tap a Wi-Fi network you want to connect → "Connect"

- To connect to a Wi-Fi network protected by security, enter a password and tap "Connect".
- Set "Auto reconnect" to ON to automatically reconnect to that network when Wi-Fi is enabled.

Information

- The Wi-Fi network password (security key) is automatically saved when connection is established so that you do not need to enter it next time.
- If you cannot connect to a Wi-Fi network properly, restart your device's Wi-Fi feature or the wireless router.
- Tap to scan the QR code of the network to be connected enables you to have connection without entering a password.

■ Deleting connection of Wi-Fi network

1 From the Home screen, ⊞ → "Settings" → "Connections" → "Wi-Fi"

2 ⚙ of Wi-Fi network during connecting to → "Forget"

Information

- Deleting the Wi-Fi settings also deletes the Wi-Fi network password, requiring you to input it next time you connect to the network.

■ Setting Wi-Fi access point

- For information necessary for connection, refer to user manual of wireless LAN access point you use. For connecting to company LAN or using Public wireless LAN service, ask a network administrator or service provider about the required information for connecting.
- When the wireless LAN access point is set for connecting only to the MAC address registered device, register the MAC address of the terminal to the wireless LAN access point. To check MAC address, from the Home screen, you can check to tap ⊞ → "Settings" → "About phone" → "Phone Wi-Fi MAC address" of "Status information".

1 From the Home screen, ⊞ → "Settings" → "Connections" → "Wi-Fi"

2 "Add network"

3 Enter the network name → Set the security

4 Enter a password → "Save"

■ Setting each Wi-Fi function

1 From the Home screen, ⊞ → "Settings" → "Connections" → "Wi-Fi"

2 ⋮ → "Advanced"

Item	Description
Switch to mobile data	Set whether to switch to mobile data communications when the Wi-Fi connection is slow or unstable.
Turn on Wi-Fi automatically	You can set Wi-Fi to turn on automatically at the location you use Wi-Fi frequently.
Detect suspicious networks	Set whether to receive a notification when suspicious behavior is detected on the Wi-Fi network.
Show network quality info	Network quality information is displayed on the Wi-Fi network list to use available.
Manage networks	Manage saved Wi-Fi networks.
Wi-Fi control history	Display apps that recently turned Wi-Fi ON or OFF.
Hotspot 2.0	Set whether to automatically connect to Hotspot 2.0 compatible Wi-Fi access point within the area without the Wi-Fi access point set.
Install network certificates	Install a network certificate.

■ Using static IP address

You can set the terminal to connect to Wi-Fi network using the static IP address.

1 From the Home screen, ⊞ → "Settings" → "Connections" → "Wi-Fi"

2 Tap the Wi-Fi network to connect → "Advanced"

3 Tap "IP settings" field → "Static"

4 Set required items

5 "Connect"

■ Using Wi-Fi Direct

You can exchange data by connecting Wi-Fi Direct compatible devices.

1 From the Home screen, ⊞ → "Settings" → "Connections" → "Wi-Fi"

2 ⋮ → "Wi-Fi Direct"

3 Tap a searched device name

- When the connection is accepted on the searched device, the terminal will be connected via Wi-Fi Direct.

■ Disconnecting Wi-Fi Direct

1 From the Home screen, ⊞ → "Settings" → "Connections" → "Wi-Fi"

2 ⋮ → "Wi-Fi Direct"

3 Tap a device name to disconnect

NFC/Osaifu-Keitai settings

You can lock the Osaifu-Keitai function, do mobile payment, read/write the NFC tag.

1 From the Home screen, ⊞ → "Settings" → "Connections" → "NFC/Osaifu-Keitai settings"

2 Tap an item to set

Item	Description
NFC/Osaifu-Keitai Lock ON/OFF	Lock NFC/Osaifu-Keitai function.
Contactless payments	Set whether to enable the service that can be used holding over a reader, such as Osaifu-Keitai compatible service.

Airplane mode

Disable all wireless connections.

1 From the Home screen, ⊞ → "Settings" → "Connections" → "Airplane mode"

2 ⊂⊃

Information

- Alternatively, tap ⊖ on the notification panel to switch setting.
- If you enable "Airplane mode", Wi-Fi, Bluetooth, etc. turn OFF. However, you can turn them ON again during Airplane mode.

Mobile networks

Access point for connecting the Internet (spmode.ne.jp) is already registered. You can add or change it if necessary.
For details on sp-mode, refer to NTT DOCOMO website.
https://www.nttdocomo.co.jp/service/spmode/ (In Japanese only)

■ Checking the access point in use

1 From the Home screen, ⊞ → "Settings" →"Connections" → "Mobile networks" → "Access Point Names"

■ Setting an access point additionally

1 From the Home screen, ⊞ → "Settings" →"Connections" → "Mobile networks" → "Access Point Names" → "Add"

2 "Name" → Enter a name of network profile to create → "OK"

3 "APN" → Enter the access point name → "OK"

4 Enter the other items required by the network operator
- Do not change "MCC" other than 440 and "MNC" other than 10, respectively. If they are changed, they are not displayed on the screen.

5 ⋮ → "Save"

Information

- When you changed settings of MCC or MNC and access points are not displayed, initialize the access point or set an access point manually.

■ Initializing an access point
By initializing an access point, the settings return to the default state.

1 From the Home screen, ⊞ → "Settings" →"Connections" → "Mobile networks" → "Access Point Names"

2 ⋮ → "Reset to default" → "Reset"

Data usage

Enable/disable mobile data communication or set upper limit of data communication.

1 From the Home screen, ⊞ → "Settings" → "Connections" → "Data usage"

- Data usage screen appears.
- Set "Mobile data" ON to enable Internet access via mobile networks.
- Tap "Mobile data usage" to display mobile data communication usage (estimate) by each period or each app. Tap ⚙ to restrict of mobile data communication usage and set to alert when limit reaches on the chart. To restrict the data usage, you can set only when "Set data limit" is ON.

Restricting background data communication

On the data usage screen, tap "Data saver" → ⊂⊃ to restrict mobile data communication automatically made by apps.

Information

- Displayed data traffic volume is an estimate. It may be different from the actual one.
  - Customers with contracts other than the ahamo plan
    You can check your data traffic volume at My docomo.
  - Customers with ahamo plan contracts
    You can check your data traffic volume at the ahamo website.
- Note that mobile data communication will suspend when data usage volume reaches to the limit. To resume mobile data communications, tap "Resume" on the popup screen or change upper limit of data communication that can be used.
- If "Data saver" sets to "ON", you cannot use tethering function.

Using tethering

Tethering is a function which uses a mobile device such as smart phone as modem to connect wireless LAN devices, USB compatible devices and Bluetooth compatible devices to Internet.

- Up to 10 devices can be connected using Wi-Fi tethering and one device can be connected using USB tethering, and up to 3 devices can be connected using Bluetooth tethering at one time.
- When using tethering, subscribing to a packet pack or packet flat-rate service is highly recommended.

■ Setting Wi-Fi tethering

You can use your terminal as an Internet access point and connect at wireless LAN devices to Internet.

1 From the Home screen, ⊞ → "Settings" → "Connections" → "Tethering" → "Wi-Fi tethering"

2 ⊂⊃

■ Setting access point for Wi-Fi tethering

1 From the Home screen, ⊞ → "Settings" → "Connections" → "Tethering" → "Wi-Fi tethering"

2 "Settings"

3 Set items → "Save"

■ Setting Bluetooth tethering

You can use your terminal as an Internet access point and connect at Bluetooth devices to Internet.

1 From the Home screen, ⊞ → "Settings" → "Connections" → "Tethering" → "Bluetooth tethering"

2 ⊂⊃

Information

- In order to use Bluetooth tethering, this terminal needs to be detectable. For details, refer to "Enabling Bluetooth function and making your terminal detectable"(P.122).

■ Setting Ethernet tethering

You can connect to the Internet via an Ethernet device using a USB Ethernet adapter (commercial item) and Ethernet cable (commercial item).

1 Connecting the terminal to an Ethernet device
- For details of the connection methods, see respective manuals.

2 From the Home screen, ⊞ → "Settings" → "Connections" → "Tethering" → "Ethernet tethering"

■ Setting USB tethering

You can connect to the Internet by connecting the terminal to a PC via USB cable A to C 02 (sold separately).

1 Insert Type-C plug of the USB cable A to C into the USB Type-C connection terminal of the terminal
- For connecting method, see "Connecting with USB cable A to C" (P.124).

2 Insert USB plug of the USB cable A to C into a PC USB port

3 From the Home screen, ⊞ → "Settings" → "Connections" → "Tethering" → "USB tethering"

Information

- During USB tethering, you can't look inside this terminal from connected PC.
- Operating environments for USB tethering are as follows. DOCOMO is not liable for the operation after upgrading/adding/changing OS.
  - Windows 8.1
  - Windows 10

Connecting to VPN (Virtual Private Network)

VPN (Virtual Private Network) is a technology to connect to the information in a protected local network from another network. Generally, VPN is provided to companies, schools and other facilities. A user can access to the information in the local network from outside of the premises.

- To set up a VPN access from the terminal, you need to retrieve the information related to security from your network administrator.

■ Adding a VPN

1 From the Home screen, ⊞ → "Settings" → "Connections" → "More connection settings" → "VPN"

2 ⋮ → "Add VPN profile"

3 Follow the instruction of the network administrator to set required items of VPN settings

4 "Save"

■ Connecting to a VPN

1 From the Home screen, ⊞ → "Settings" → "Connections" → "More connection settings" → "VPN"

2 Tap a VPN you want to connect to

3 Enter necessary authentication information → "Connect"
- appears on the status bar.

■ Disconnecting VPN

1 Open the Notification panel → Tap the VPN connecting notification
- Follow the onscreen instructions.

Sounds and vibration

1 From the Home screen, ⊞ → "Settings" → "Sounds and vibration"

2 Select the item and set

Item	Description
Sound mode	Select from Sound, Vibrate, or Mute.
Vibrate while ringing	→ P.102
Ringtone	→ P.102
Notification sound	→ P.102
System sound	Set sound theme.
Volume	→ P.101
Call vibration pattern	→ P.102
Notification vibration pattern	→ P.102
Vibration intensity	Adjust the vibration intensity of touch operations.
System sound/ vibration control	Set the vibration at the time of operation or key tap.
Sound quality and effects	Customize your preferred sound quality and set sound effects.
Separate app sound	Play the media sound of selected app for the other device.

Setting manner mode

When set to manner mode (Vibrate/Mute), incoming call ringtones and notification sounds no longer ring.

1 From the Home screen, ⊞ → "Settings" → "Sounds and vibration"

2 "Vibrate"/"Mute"

Information

- If you change "Ringtone" (P.101) of "Volume" when manner mode (Vibrate, Mute) is set, manner mode (Vibrate, Mute) turns to off.
- Regardless of manner mode (Vibrate, Mute) settings, the sound (sound of playing the movie or music, shutter sound, etc.) except for ringtone or each of notification sound are not muted.
- Set "Temporary mute" to ON during mute mode to set mute duration until you return to "Sound"/"Vibrate" mode set just before.

Adjusting volumes

1 From the Home screen, ⊞ → "Settings" → "Sounds and vibration" → "Volume"
- The volume bar appears.

2 Drag ● of each volume left or right

■ Adjusting volumes with the Volume UP key/Volume DOWN key

1 Press Volume UP key/Volume DOWN key on the Home screen, etc.

Information

- If you set "Use Volume keys for media" to ON, you can adjust the media volume with Volume UP key/Volume DOWN key even when you are not playing media.

Notifying incoming call/notification by sound/vibration

Setting ringtone/notification sound when receiving call or notifications.

■ Setting ringtone

1 From the Home screen, ⊞ → "Settings" → "Sounds and vibration" → "Ringtone"

2 Tap a ringtone you want to set
- When "Silent" is set, ringtone does not sound.
- Tap ＋ to add Beep tone.

■ Setting Vibration pattern

1 From the Home screen, ⊞ → "Settings" → "Sounds and vibration" → "Call vibration pattern"/"Notification vibration pattern"

2 Tap a vibration pattern you want to set

■ Setting notification sound

1 From the Home screen, ⊞ → "Settings" → "Sounds and vibration" → "Notification sound"

2 Tap a notification sound you want to set
- When "Silent" is set, notification sound does not sound.

Information

- If "Vibrate while ringing" is set to ON when manner mode (Vibrate, Mute) is not set, ringtone sounds and the terminal vibrates when receiving calls. If "Vibrate while ringing" is set to OFF, only ringtone sounds.

Notifications

1 From the Home screen, ⊞ → "Setting" → "Notifications"

2 Select the item and set

Item	Description
Notification pop-up style	Select notification pop-up style from "Brief", "Detailed". • When you select "Brief", you can set more details.
Recently sent	Display the recent notification ordered by time. Tap app name to set detail of notifications for each app.
Do not disturb	Set to mute ringtone/notification sound and alarms, and not display notifications, apart from any exceptions you have selected.
Advanced settings	Set details of notifications.

Display

1 From the Home screen, ⊞ → "Settings" → "Display"

2 Select the item and set

Item	Description
Dark mode settings	Use a dark theme that is easy on your eyes so that you can use the terminal comfortably at night as well. • This feature may not be able to use for some other apps. • You can also switch dark mode from the notification panel.
Brightness	→ P.104
Adaptive brightness	Record display brightness adjustments so that the brightness is automatically adjusted when the brightness in your surroundings are the same as when you recorded the brightness.
Eye comfort shield	Reduce the amount of blue light.
Font size and style	Set font size and screen zoom of the screen.
Screen zoom	You can change zoom of the screen.
Full screen apps	Select the app to use with the aspect ratio of the full screen.
Screen timeout	Set time until screen display turns off. • The screen becomes a little dark before the set time comes close.
Easy mode	Change to the easy mode that includes of simple Home screen layout and bigger icon. • If the home app is "docomo LIVE UX", only the screen zoom and character size increase.
Edge panels	Set Edge panels. → P.50
Navigation bar	→ P.34
Touch sensitivity	Increase the touch sensitivity of the screen when you use screen protectors.

Item	Description
Show charging information	Display the battery level and estimated time until the battery is fully charged when Always On Display is off or not displayed.
Screen saver	Set ON/OFF, type for screen saver while charging.

Adjusting brightness of the display

1 From the Home screen, ⊞ → "Settings" → "Display"

2 Drag ⊸ of "Brightness" left or right

Wallpaper

1 From the Home screen, ⊞ → "Setting" → "Wallpaper"

2 "My wallpapers"/"Gallery"/"Wallpaper services"

3 Select Wallpapers to set

4 Follow the onscreen instructions

Information

- If you tap "Explore more wallpapers" in Step 2, you can download the wallpaper from Galaxy Themes.
- If you set "Apply Dark mode to Wallpaper" to ON, you can apply dark mode to the wallpaper (P.103).

Themes

1 From the Home screen, ⊞ → "Setting" → "Themes"
2 "Themes"/"Wallpapers"/"Icons"
3 Select themes, etc. to set
4 Follow the onscreen instructions

Lock screen

1 From the Home screen, ⊞ → "Settings" → "Lock screen"
2 Select the item and set

Item	Description
Screen lock type	→ P.106
Smart Lock	Set to unlock the touch screen automatically by a trusted location or terminal that you have set up. • You have to set the authentication method required to unlock the device in advance.
Secure lock settings*	Set the secure lock features such as the auto factory reset, lock instantly with ▯[Side key], etc.
Wallpaper services	Set whether to display guide page or use Dynamic Lock screen, etc. on the wallpaper services.
Clock style	Select the clock style and color to display on the lock screen.
Roaming clock	Set whether to change to digital clock showing both local and home time zones when roaming.
Widgets	Select the Widgets to display on the lock screen.
Contact information	You can display contact information on the lock screen by inputting phone number or email address, etc.
Notifications	Set the notifications on the lock screen.
Shortcuts	Select the apps to boot from lock screen.
About Lock screen	Check the version of lock screen and open source licenses.

* Display differs depending on the "Screen lock type".

Setting unlock method for the screen lock

You can set to require entering unlock pattern in advance on the touch screen, etc. for unlocking the screen lock.

1 From the Home screen, ⊞ → "Settings" → "Lock screen" → "Screen lock type"

2 Select unlock method → Enter according to the onscreen instructions

Information

- To set the screen lock to OFF, from the Home screen, ⊞ → "Settings" → "Lock screen" → "Screen lock type" → enter the set unlocking method → "None".
- When you incorrectly enter the unlock pattern, PIN, or password a certain time, a message indicating to retry appears. For details, see the screen instructions.
- If you forget PIN or password, access from a PC to Find My Mobile web page and perform "Unlock" to unlock screen. This function can be used when the terminal connected to Wi-Fi or mobile network and set Galaxy account. For details, refer to the Find My Mobile website. → P.108
- If you forget how to unlock the screen without a Galaxy account, you cannot use this terminal until you initialize this terminal. As for our company we can not assume responsibility so please be forewarned.

Biometrics and security

1 From the Home screen, ⊞ → "Settings" → "Biometrics and security"

2 Select the item and set

Item	Description
Face recognition	→ P.107
More biometrics settings	Set Show unlock transition effect.
Google Play Protect	Set Google Play Protect.
Security update	You can check the update status of security and security update.
Google Play system update*1	You can check the update status of Google Play system and Google Play system update.
Find My Mobile	→ P.108
Secure Folder	Keep your private contents safe and secure.
Private Share	You can set an expiration date to share files in a secure way that prevents recipients from re-sharing files.
Install unknown apps	Permit to install the unknown apps.
Encrypt SD card	Tap "Delete all data and encrypt SD card" to encrypt data saved on a microSD card is set so that it cannot be used on another terminal or a PC. • You need to initialize the microSD card before encryption. You need to back up the important data before encryption. • When the microSD card is encrypted and do "Factory data reset", you can't use the data in the microSD card.

Item		Description
Other security settings	Set up SIM card lock	→ P.32
	Make passwords visible	Set whether to display temporarily the entered characters on the password entry screen.
	Device admin apps	Set whether to enable device admin apps.
	Storage type	The location for credential storage backup is displayed.
	View security certificates	Show security certificates.
	User certificates	Show user certificates.
	Install from device storage*2	Install certificates from the storage.
	Clear credentials	Delete all certificates and passwords such as VPN setting information.
	Trust agents*3	Perform selected actions when trusted devices are connected.
	Pin windows	Set whether to pin certain apps to the terminal screen.
	Security policy updates	Set whether to update the security policy automatically.

*1 Appears only when Google account is set.
*2 To clear installed certificate, tap "Clear credentials" to clear it from credential storage. Operation of "Clear credentials" clears all certificate in the credential storage.
*3 Display differs depending on the "Screen lock type" (P.106).

Face recognition

You can unlock the terminal by recognizing the face.

■ Precautions for using face recognition

- Your device could be unlocked by someone or something that looks like your image like twins.
- Face recognition is less secure than other recognition method.

■ Precautions for registering face

- Consider the conditions when registering, such as wearing glasses, hat, mask, beard, or heavy makeup.
- Ensure that you are in a well-lit area and that the camera lens is clean when registering.
- Ensure your image is not blurry for better match results.

Setting face recognition

■ Registering the face

1 From the Home screen, ⊞ → "Settings" → "Biometrics and security" → "Face recognition"
- When a security unlock preference which requires authentication is selected, proceed to step 3 after authentication operation.

2 "Continue" → Set the unlock screen method
- For unlocking method of screen lock, see "Setting unlock method for the screen lock" (P.106).

3 "Continue" → Follow the onscreen instruction to register your face → "Done"

■ Removing face data

1 From the Home screen, ⊞ → "Settings" → "Biometrics and security" → "Face recognition"
- Cancel the security to protect face recognition.

2 "Remove face data" → "Remove"

Operating face recognition

1 Hold the terminal so that the face is in front of the front camera on the lock screen/face recognition screen
- If the authentication failed, perform the authentication operations with the auxiliary security unlock preference registered at face recognition.

Information

- If you do not want to use face recognition to unlock the terminal, from the Home screen, tap ⊞ → "Settings" → "Biometrics and security" → "Face recognition" and set "Face unlock" to OFF.
- If face authentication failed, you can cancel the screen lock by swiping the screen and using the method of unlock when you registered the face.

Find My Mobile details

Track and manage the device remotely.

- To use Find My Mobile, you need to set a Galaxy Account.

1 From the Home screen, ⊞ → "Settings" → "Biometrics and security" → "Find My Mobile"

2

- Follow the onscreen instructions.
- Sign in if you have already had a Galaxy account. → P.31

3 Open Find My Mobile (Device Remote tracking) website from a PC

- For details on Find My Mobile, refer to the following website https://findmymobile.samsung.com/ (In Japanese only)

4 After signing in by the Galaxy account, follow the onscreen instruction to make settings

Privacy

1 From the Home screen, ⊞ → "Settings" → "Privacy"

2 Select the item and set

Item	Description
Permission manager	Set the App permission.
Samsung Privacy	Manage the personal data connected to your Galaxy account.
Customization Service	Customize your content in Galaxy apps and services.
Send diagnostic data	Set whether to send diagnostic report.
Android personalization service	Get personalized content based on your app usage.
Autofill service from Google	Check and manage password, address, credit card information, etc. saved into the Google account.
Google location history	Set whether places that the user has visited with this terminal are saved. When saving data, more customized functions can be used on the entire Google service.
Activity controls	Set whether to save activity of web and app. When saving data, more customized functions can be used on the entire Google service.
Ads	Manage customized settings of Google Ads.
Usage & diagnostics	Set whether to send usage and diagnostic report to Google automatically.

docomo service/cloud

1 From the Home screen, ⊞ → "Settings" → "docomo service/cloud"

2 Select the item and set

Item	Description
d ACCOUNT setting	Set d ACCOUNT for using in docomo apps. Also, you can set d ACCOUNT certification using biological information registered to the terminal.
docomo Application Data Backup	Set back up of the docomo's apps.
docomo apps management	Set regularly update checking, etc.
Osusume Apps	Set Osusume Apps and check received notifications.
Osusume hint	Set Osusume hint to use.
SuguApp	You can easily launch apps and operate phones with intuitive operations such as shaking your smartphone. (P.43)
docomo location information	Set location information service function for imadoco search/imadoco kantan search/Keitai-Osagashi service.
Send device information	Make settings for sending terminal information to the server managed by DOCOMO.
Member/profile settings	Check or change your member information and profile information used for docomo services.
docomo initial settings	Configure the service settings, etc. all at once in order to use the terminal.
Switch USB debugging	Make settings for using dedicated devices such as those for docomo shops.
Open source licenses	Shows Open source license.

Information

- Some apps displayed in docomo service/cloud can be disabled. Disabled apps may not appear in the list of docomo service/cloud.
- By newly downloading an app provided by DOCOMO, an item may be added to the docomo service/cloud list.

Google

1 From the Home screen, ⊞ → "Setting" → "Google"

2 Select the item and set

Information

- For details on Google settings, tap ⓘ to check the help on the Google settings screen.

Accounts and backup

1 From the Home screen, ⊞ → "Settings" → "Accounts and backup"

2 Select the item and set

Item	Description
Manage accounts	→ P.111
Back up data	Back up data to Galaxy cloud.
Restore data	Restore the data of Galaxy cloud.
Back up data	Back up data to Google Drive.
Bring data form old device	Transfer images, contacts and messages, etc. from the terminal which you used before.
External storage transfer	You can back up data to the SD card or USB storage, or restore the backup data using Smart Switch.

Manage accounts

1 From the Home screen, ⊞ → "Settings" → "Accounts and backup" → "Manage accounts"

Item	Description
docomo	Your docomo account is set by default.
Add account	→ P.31
Auto sync data	Set whether to sync account data automatically.

Removing account

1 From the Home screen, ⊞ → "Settings" → "Accounts and backup" → "Manage accounts"

2 Tap an account to remove → "Remove account"

3 "Remove account"

Information

- Some accounts may not be removed. To remove the account, perform "Factory data reset" (P.116).

Syncing the accounts manually

1 From the Home screen, ⊞ → "Settings" → "Accounts and backup" → "Manage accounts"

2 Tap an account type you want to sync

3 Set according to the onscreen instructions

Digital Wellbeing and parental controls

1 From the Home screen, ⊞ → "Settings" → "Digital Wellbeing and parental controls"

2 Select the item and set

Item		Description
Dashboard	Screen time	Check total of screen time and each app's screen time.
	Notifications received	The number of notifications received is displayed.
	Unlocks	Unlock times is appeared.
Screen time		Set how many hours you would like to spend on the terminal each day.
App timers		Tapping ⌛ for each app enables you to limit the amount of time the app is used. The app can no longer be used once the time limit has been reached.
Focus mode		You can use or receive notifications only selected apps or some apps.
Bedtime mode		You can change the screen to gray scale and turn off the ringtone or notification sound to relax yourself leisurely before sleeping. You can also set a schedule for which this feature is enabled.
Parental controls		You can manage and restrict the usage time of the terminal using Google Family Link app. • To use the parental control, it is required to install and set the Google Family Link app.

Battery and device care

1 From the Home screen, ⊞ → "Settings" → "Battery and device care"

- Display maintenance status of the terminal.

2 Select the item and set

Item	Description
Battery	→ P.112
Storage	→ P.113
Memory	→ P.113
Device protection	→ P.114

Information

- Tap ⋮ → "Advanced" → "Auto optimization" on Device care screen to set whether or not to optimize the terminal once a day.

Battery

Display battery usage data, battery level, settings related to power saving mode, usage for each app, etc.

1 From the Home screen, ⊞ → "Settings" → "Battery and device care" → "Battery"

Item	Description
Estimated battery life*	Display the estimated battery life when not charging.
Time until fully charged*	Display the estimated time until the battery is fully charged when charging. However, the estimated time until fully charged may not be displayed if charging in a low or high temperature environment.
Battery power remaining*	Display the percentage of battery power remaining.

Item		Description
Usage since last full charge		You can see battery usage and check to see which apps are consuming battery power. You can also optimize battery usage of each app. • To change the settings of battery usage optimization, from the home screen, tap ⊞ → "Settings" → "Apps" → select the app → tap "Battery" → "Optimize battery usage" → "Apps not optimized" → "All" to select apps to change the settings.
Power saving mode		Turning on "Power saving mode" to restrict background network usage, syncing and location checking. Also, you can set additional setting to save battery usage furthermore.
Background usage limits		Restrict the battery usage number of apps that are not frequently used.
More battery settings	Adaptive battery	Restrict the battery usage number of apps that are not frequently used.
	Show battery percentage	Check the battery status.
	Show charging information	Display the battery level and estimated time until the battery is fully charged when Always On Display is off or not displayed.
	Fast charging	Set whether to conduct Fast charging by a cable connection.

* Depending on settings or operations on the terminal displayed Items may differ.

Storage

You can check memory space of the terminal or microSD card or format microSD card.

1 From the Home screen, ⊞ → "Settings" → "Battery and device care" → "Storage"

- Free space of storage, etc. is displayed.

Set storage

1 From the Home screen, ⊞ → "Settings" → "Battery and device care" → "Storage" → ⋮ → "Advanced"

Item	Description
Internal storage	Display total memory space of the terminal. Display the stored data space of apps, images, etc. by category. Tap an item to check data.
SD card*	Display entire memory space of microSD card. • Tap "Format" to format microSD card. • Tap "Unmount" to unmount microSD card. After unmount microSD card, tap "SD card" → "Mount" to mount microSD card.

* Appears only when microSD card is attached.

Information

- When USB storage is attached to the terminal, corresponding items appear.

Memory

Check the memory condition.

1 From the Home screen, ⊞ → "Settings" → "Battery and device care" → "Memory"

- Free space of memory, etc. are displayed.

Information

- When several apps are running, battery consumption may increase and usage time may shorten. Therefore, ending unused apps is recommended.

Device protection

Protect the terminal.

1 From the Home screen, ⊞ → "Settings" → "Battery and device care" → "Device protection" → "Scan phone"
- Device security status is displayed.

Apps

1 From the Home screen, ⊞ → "Settings" → "Apps"

2 Tap an app
- Set the app follow the onscreen instructions.

Information

- On the app settings screen, tap "Choose default apps" to set a default home application or browser application.
- On the app settings screen, tap ⋮ to reset app settings and set permission of apps.

Disabling applications

Disabled app stops its operation and it is not displayed on the Home screen.

- The app is not uninstalled.
- It is available for some apps or services that cannot be uninstalled.

1 From the Home screen, ⊞ → "Settings" → "Apps"

2 Tap an app to disable → "Disable" → "Disable app"

Information

- If you disable an app, other apps linking with the disabled app may not be operated correctly. Enable the app again to operate linked apps correctly. To enable again, from the Home screen, ⊞ → "Settings" → "Apps" → ☰ → "Disabled" → "OK" → tap an app you want to enable → tap "Turn on".

General management

1 From the Home screen, ⊞ → "Settings" → "General management"

2 Select the item and set

Item	Description
Language	Set language to use.
Text-to-speech	Set sound text-to-speech engine for text reading or text reading speed.
Date and time	→ P.115
Galaxy Keyboard settings	→ P.38
Keyboard list and default	Set Galaxy keyboard/Google voice typing. • Tap "Default keyboard" to set the keyboard that use for default. • When you set "Keyboard button on navigation bar" to ON, keyboard button is displayed on the navigation bar.
Physical keyboard	Set up for using external keyboard.
Mouse and trackpad	Set about when using mouse/trackpad.
Autofill service	Set autofill service.
Reset	→ P.116
Contact us	You can use Galaxy Members.

Date and time

1 From the Home screen, ⊞ → "Settings" → "General management" → "Date and time"

Item	Description
Automatic date and time	Adjust date and time automatically according to online settings. By default, they are set to be corrected automatically.
Select time zone*1	Set time zone.
Set date *1*2	Set the date.
Set time *1*2	Set the time.
Use 24-hour format	Switch clock to 24-hour format.

*1 The item is displayed when "Automatic date and time" is set to OFF.
*2 Date and time information may be adjusted automatically.

Information

- The date and time are reset when the battery is discharged.

Reset

1 From the Home screen, ⊞ → "Settings" → "General management" → "Reset"

Item	Description
Reset all settings	Reset the terminal to the default state except for some data and settings.
Reset network settings	Reset network settings to the default state such as Wi-Fi, mobile data and Bluetooth.
Reset accessibility settings	Reset the accessibility to the default state.
Factory data reset	Reset the terminal to the default state. • Please note that some apps preinstalled at the time of purchase are uninstalled. Even if you uninstall such apps, downloading again may be available at "Play Store" (P.85), etc.
Auto restart at set times	Set whether to restart the terminal automatically within one hour from set day of the week and time. • The terminal is optimized by restarting. Any unsaved data will be lost when the device restarts.

Accessibility

1 From the Home screen, ⊞ → "Settings" → "Accessibility"

2 Select the item and set

Item		Description
Recommended for you		Display the recommend function on your app usage.
TalkBack		Enable user accessibility such as service with which sound or vibration responds to your operations and text-reading service.
Visibility enhancements	High contrast theme	Set high contrast theme.
	High contrast fonts	Adjust the color and outline of fonts.
	High contrast keyboard	Adjust the size of Galaxy keyboard and change the color of it.
	Highlight buttons	Show buttons with frame.
	Color inversion	Invert screen color.
	Remove animations	If you are concerned about animation or screen movement, you can delete specific screen effects.
	Color correction	You can correct colors.
	Magnifier window	Magnify content shown on the screen.
	Magnification	Set how to magnify screen.
	Large mouse/ touchpad pointer	Increase the size of mouse pointer and touchpad pointer.
	Font size and style	Set font size and screen zoom of the screen.
	Screen zoom	You can change zoom of the screen.

Item		Description
Hearing enhancements	Adapt Sound	Adapt the sound.
	Left/right sound balance	Set sound balance when listening music using earphone.
	Mono audio	Change audio to monaural for easy listening with monaural earphone.
	Mute all sounds	Turn OFF all sound including listening volume.
	Live Transcribe	Convert the conversation and speech to text at real time and display it.
	Google subtitles (CC)	Set and check how to display subtitles.
	Sound Notifications	You can use the sound notifications to detect events in your home.

Item		Description
Interaction and dexterity	Universal switch	Operation the terminal with customized switches.
	Assistant menu	Display button menus which are accessible, instead of general operations, such as the hard key and gesture.
	Answering and ending calls	You can add incoming answering the phone method of operation, or set it so that you can hang up by pressing ▯ [Side key]. • If sleep mode turns on during a call when "Press side key to end calls" is turned on, press ▯ [Side key] to turn off sleep mode and then press ▯ [Side key] to end the call.
	Interaction control	Set to touch operation blocking range. • To set operations when the function is enabled, press and hold ▯ [Side key] and volume UP key simultaneously, then operate following onscreen instructions. • Enable the function automatically disables "Auto rotate" (P.34).
	Touch and hold delay	Set time for sensing touching and holding the display.

Item		Description
Interaction and dexterity	Tap duration	Set the time until the input operation is recognized as a tap.
	Ignore repeated touches	Set the time to disable touch repetition.
	Auto click after pointer stops	Set whether to perform click automatically where the mouse pointer is stopped.
	Sticky keys	When Shift, Ctrl or Alt key, etc. is pressed, the key stay pressed.
	Slow keys	Set the time until pressing a key is recognized when hold on pressing a key to avoid pressing the key mistakenly.
	Bounce keys	Set the time until pressing a same key twice is recognized to avoid pressing the same key mistakenly for multiple times.

Item		Description
Advanced settings	Accessibility button	Set whether to display the accessibility button on the navigation bar.
	Side and Volume up keys	Set the function to activate by pressing [] [Side key] and Volume UP key simultaneously.
	Volume up and down keys	Set the function to activate by touching and holding Volume UP key and Volume DOWN key simultaneously.
	Flash notification	Set whether to notify notification or alarm by flashing the light of Camera.
	Time to take action	Set the time to display notification etc. that is temporarily appeared on the screen.
	Speak keyboard input aloud	Set whether to speak keyboard input aloud.
	Voice Label	Write voice recordings to NFC tags to provide information about nearby objects.
Installed services		Set installed services.
About Accessibility		You can view the version of accessibility.
Contact us		You can use Galaxy Members.

Information

- Note that if you permit use of "TalkBack", personal information such as credit card number and communication using the user interface are recorded. Note that DOCOMO is not responsible for data or information leak.
- For details about "TalkBack" from the Home screen, ⊞ → "Settings" → "Accessibility" → "TalkBack" → "Settings" → "Tutorial and help".
- "TalkBack" may not work properly when docomo LIVE UX is set as Home screen.

Software update

1 From the Home screen, ⊞ → "Settings" → "Software update"

2 Select the item and set

Item	Description
Download and install	→ P.139
Auto download over Wi-Fi	→ P.139
Last update	Display software update information.

About phone

1 From the Home screen, ⊞ → "Settings" → "About phone"

2 Select the item and set

Item	Description
Phone name	Check/change name of the terminal. My phone number, Model number, Serial number and IMEI are displayed.
Status information	Displays the SIM card status and IMEI information, etc.
Legal information	Check open source licenses, Google legal, etc.
Regulatory information	Display regulatory information of the terminal.
Software information	Check Android version, etc.
Battery information	Check the battery status, etc.

Checking your own phone number

1 From the Home screen, ⊞ → "Settings" → "About phone"

- Your phone number is displayed in "Phone number".

File management

Storage folder structure

Phone (Internal storage)

Main created folders in the terminal (/storage/emulated/0) by default are as follows.

- Depending on operations on the terminal, displayed folders may differ.

Item	Description
Alarms	Save music data, etc. to be set as alarm sound.
Android	Save setting data or temporary files, etc. for the system or apps.
Audiobooks	Save audiobooks.
DCIM	Save still image/video data shot by the camera and image data of displayed screen (screen capture) (when the saving location is set to the terminal).
Documents	Save Office document etc.
Download	Save data downloaded by the browser.
Movies	Save video data.
Music	Save music data.
Notifications	Save music data, etc. to be set as notification sound.
Pictures	Save image data, etc.
Podcasts	Save podcast data.
Ringtones	Save music data, etc. to be set as ringtone.

microSD card (external storage)

You can attach a microSD card into the terminal.

- For details about what microSD cards you can use with the terminal, refer to "microSD card" (P.25).
- For details about attaching/removing microSD card, refer to "Attaching microSD card" (P.26) and "Removing microSD card" (P.27).

File operation

Handling files and folders

Use "My Files" to display, etc. or manage various data such as still images, videos, music or document saved on the terminal, or microSD card.

- Depending on the folders, there are some operations which cannot be operated such as changing name and deleting folders, etc.

1 From the Home screen, ⊞ → "My Files"

2 Tap an item → Tap a folder as required
- When you touch and hold a folder/file to mark, the items such as menu appear. Follow the onscreen instructions.

3 Tap a file you want to use
- Display/play the file.

Creating a folder

1 From the Home screen, ⊞ → "My Files"

2 Tap an item except for in a category → Tap a folder as required

3 ⋮ → "Create folder" → Enter name of the folder → "Create"

Renaming a file or folder

1 From the Home screen, ⊞ → "My Files"
2 Tap an item → Tap a folder as required
3 Touch and hold a folder/file you want to rename → "More" → "Rename" → Enter name → "Rename"

Deleting a file or folder

1 From the Home screen, ⊞ → "My Files"
2 Tap an item → Tap a folder as required
3 Touch and hold the folder/file → "Delete"/"Delete all" → "Delete"
- Tap "Move to Trash" if you set ⋮ → "Settings" → "Trash" to ON.

Moving/Copying a file or folder

1 From the Home screen, ⊞ → "My Files"
2 Tap an item → Tap a folder as required
3 Touch and hold a folder/file you want to move/copy → "Move"/"Copy"
4 Select a folder to move to/copy to → "Move here"/"Copy here"

Menu of My files

The items appear when tapping ⋮ on the main screen, folder/file list screen of My Files. Follow the onscreen instructions.

Data communication

Bluetooth communication

You can transfer data between the terminal and Bluetooth device wirelessly.

- For Bluetooth compatible version or profile, see "Main specifications" (P.141)
- For setting or operations, refer to the user manual of Bluetooth device to connect.
- Wireless connections are not guaranteed between the terminal and for all Bluetooth devices.

Notes on using Bluetooth function

1. Connect the terminal to the other Bluetooth device within approximately 10 m of vistaed distance. Depending on the environment (wall, furniture, etc.) or structure of building, available distance for connecting becomes short.
2. Keep more than approximately 2 m away from the other device (electronic products, AV equipment, OA equipment etc.) and connect it. Always keep more than approximately 3 m away from a microwave oven because it strongly affects the connection when it is operated. If it is near, the connection may not be established properly when the other device power on. Or the connection may cause noises on TV or radio or the image may be distorted.
3. When there is a broadcast station or radio near the device and ambient signals is too strong, connection may not be established.
4. Radio waves emitted by a Bluetooth device may affect electronic medical equipment. Turn off the terminal and other Bluetooth devices in a train, aircraft or hospital, near an automatic door or fire alarm, and at a place where flammable gases are generated such as a gas station.

Reception interference caused by wireless LAN devices

The terminal's Bluetooth function and wireless LAN devices use the same frequency band (2.4 GHz). If you use the terminal near a wireless LAN device, reception interference may occur or the communications speed may lower. In these cases, do the following:

1. Keep the Bluetooth device over approximately 20 m away from a wireless LAN device.
2. Within approximately 20 m, turn off either the Bluetooth device or the wireless LAN device.

Enabling Bluetooth function and making your terminal detectable

1 From the Home screen, ⊞ → "Settings" → "Connections" → "Bluetooth"

2 ⊂⊃

Information

- When you do not use Bluetooth function, turn it OFF to save the battery.
- The setting of the Bluetooth ON/OFF is not changed even when the power is turned off.

Pairing/Connecting with Bluetooth device

To transfer data between your terminal and other Bluetooth device, perform paring with the device and register it to the terminal beforehand. And then perform connection.

- Depending on Bluetooth device, only pairing may be performed or pairing and connection may be performed successively.
- When pairing, entering the passcode (PIN) may be required depending on Bluetooth device.

1 From the Home screen, ⊞ → "Settings" → "Connections" → "Bluetooth"

2 ⊂⊃

- Detected Bluetooth devices are displayed by list.
- If no Bluetooth devices are displayed, tap "Scan" to re-search.

3 Tap a device you want to connect

4 Confirm a pass key → "Pair"

When the other device requests for pairing

When pairing request for Bluetooth communication screen appears, tap "Pair" as required.

Canceling connection

On the Bluetooth device list, tap a connected device.

Canceling pairing

1 From the Home screen, ⊞ → "Settings" → "Connections" → "Bluetooth"

2 Tap ⚙ of a device you want to cancel pairing → "Unpair"

Sending/Receiving data via Bluetooth

- Set the Bluetooth function to ON beforehand to be detectable.

Sending data via Bluetooth

You can send contacts (contact data in vcf format) or files such as still images or videos, etc., to a device (PC, etc.) compatible with Bluetooth.

- For sending, perform the operation from the menu such as "Share", "Send", etc., of each app.

Receiving data via Bluetooth

1 If "File transfer" screen appears, tap "Accept"
  - appears on the status bar and data reception starts.
  - Reception status can be checked by the Notification panel.
  - After completion of the reception, display Notification panel and tap "File received" to display the list of received data. Tap data you want to view/play, you can check received data.

NFC communication

NFC is an abbreviation of Near Field Communication that is an international standard proximity wireless communication method specified by ISO (International Organization for Standardization). By using reader/writer function (R/W), put the terminal close to NFC tag to receive data, etc.

- For holding over the other device, see "Notes on holding over the device" (P.87).

Turning NFC/Osaifu-Keitai settings to ON

To read/write NFC tags, turn NFC/Osaifu-Keitai settings to ON.

1 From the Home screen, ⊞ → "Settings" → "Connections" → "NFC/Osaifu-Keitai settings"

2

Information

- If you set NFC/Osaifu-Keitai lock ON/OFF, transmitting/receiving of NFC tags while the screen is locked is disabled.
- Actual communications are not guaranteed for all devices equipped with Reader/Writer function.

External device connection

Connecting to a PC

Connecting with USB cable A to C

When you connect this terminal with PC via a USB cable A to C 02 (sold separately), you can synchronize data with Galaxy Smart Switch PC (P.124) or recognize this terminal as a media device.

- The connectable OS are Windows 8.1 and Windows 10, Mac OS X 10.5 or late.

1 Insert Type-C plug of USB cable A to C into USB Type-C connection terminal of this terminal to connect this terminal to a PC
- Insert the USB plug and Type-C plug horizontally.

2 Open the Notification panel → "USB for file transfer" → "USB for file transfer"
- Setup screen is displayed on the terminal.

Information

- Connect the USB plug of USB cable A to C directly to the USB connector of a PC. If you connect it via USB HUB or USB extension cable, it may not work properly.
- Do not remove USB cable A to C while data is transferring. Data may be damaged.
- Selecting "Connected device" for "USB controlled by" enables the terminal to charge from the device it is connected to. Charging may not be possible depending on the connected device.

Using Galaxy Smart Switch

Using Galaxy Smart Switch to manage media files such as music/video and personal information and update the software of the terminal.
You can only forward content that you own or have the rights to.
Samsung Electronics Co., Ltd. takes no responsibility for any infringements on the Copyright Law.

- You can download Galaxy Smart Switch PC from Galaxy Smart Switch homepage and install it into your computer. For the terms of use or more information, see Galaxy Smart Switch homepage.
  https://www.galaxymobile.jp/apps/smart-switch/ (In Japanese only)

Launching Smart Switch connecting PC

1 Connect this terminal to PC via USB cable A to C (P.124)

2 Start up "Smart Switch" on a PC
- Follow the onscreen instructions.

Information

- Do not remove USB cable A to C while data is transferring. Data may be damaged.
- Check the battery capacity before data transfer.

Launch Smart Switch connecting Wi-Fi Direct

By connecting to Wi-Fi Direct, you can migrate data wirelessly.
For example, migrating data from an older terminal

1 Start Smart Switch on the previous terminal
- If the app isn't installed, download it from Play Store or Galaxy Store.

2 From the Home screen of the terminal, ⊞ → "Settings" → "Accounts and backup" → "Bring data form old device"

3 "Receive data" → Select the types of terminal that you used before → "Wireless"
- The displayed item may differ depending on selected terminal.

4 Set according to the onscreen instructions

Cooperate with Windows

You can use your Microsoft account to check pictures and messages saved on the terminal from a PC.

1 From the Home screen, ⊞ → "Settings" → "Advanced features"

2 "Link to Windows"
- Sign in Microsoft account and follow the onscreen instructions.

Connecting to printer

You can print on a compatible printer via Wi-Fi or USB connection.

- When using the Wi-Fi functions, the terminal and printer need to be connected to the same Wi-Fi network or connected via Wi-Fi Direct. Configure the Wi-Fi and printer side settings in advance.
- For compatible connection cables when using USB connection, refer to the instruction manual of the printer.
- The printer plug-in needs to be installed in advance in order to connect the printer which is going to be used. To install the plug-in, from the Home screen, ⊞ → "Settings" → "Connections" → "More connection settings" → "Printing" → "Download plugin" and following onscreen instructions.

Printing with printer

1 On the screen of app that printing is available, ⋮ → "Print"
- Follow the onscreen instructions.
- The method of printing is depending on the app.

Connecting to other device

Using Smart View

Connect the terminal and Screen Mirroring compatible devices via Wi-Fi and display the screen and the contents of the terminal on TV or display.

1 Open the Notification panel

2

3 Tap Screen Mirroring compatible devices that detected

- To disconnect to Screen Mirroring compatible devices, tap "Smart View" on the notification panel.

Information

- The image degradation may occur on the image transmission using Screen Mirroring due to transcode and send.

International roaming

Overview of international roaming (WORLD WING)

The international roaming (WORLD WING) is a service that allows you to use the same phone number and Email address as ones used in Japan within the service area of overseas network operator that is associated with DOCOMO. You can use without changing of call and SMS settings.
For details of international roaming (WORLD WING), refer to NTT DOCOMO website.
https://www.nttdocomo.co.jp/service/world/roaming/ (In Japanese only)

Supported network

You can use the terminal in LTE network, 3G network and GSM/GPRS network service area. Services are also available in countries and areas supporting 3G850MHz/GSM850MHz.

Information

- For country codes/international call access codes/universal number international prefix, supported countries/areas and network operators, refer to NTT DOCOMO website.

Available overseas services

(○ : Available)

Main Communication service	LTE	3G	3G850	GSM(GPRS)
Call	○	○	○	○
SMS	○	○	○	○
Packet communication*	○	○	○	○

* To use data communication when roaming, turn ON the data roaming settings (P.128).

Information

- Some services are not available depending on the overseas network operator or network.
- Connected network operators can be checked on the Notification panel (P.40).

Before using the terminal overseas

Checking before leaving Japan

Check the following for using terminal overseas before leaving Japan.

Subscription

- Check the subscription of WORLD WING. For details, contact "docomo Information Center" on the last page of this manual.
- If you use the ahamo plan, you do not need to apply for WORLD WING and cannot abolish it.

Charging

- For details on charging, refer to NTT DOCOMO website.

Usage fee

- Overseas usage charge (call and packet communication) differs from those in Japan. For details, see NTT DOCOMO website. Please be sure to check the ahamo website when using with the ahamo plan.
- As some apps automatically perform packet communications, the packet communication charge may become expensive. For each application, confirm with your application provider by yourselves.

Preset

Network service

If you subscribed to network services, Voice mail service, Call forwarding service and Caller ID request service, etc. are available from overseas. However, some network services may not be used.

- To use network services overseas, you need to activate "Remote operation settings". Alternatively, you can set "Remote operation settings" overseas. Setting in Japan (P.65), Setting overseas (P.131).
- Depending on overseas network operators to connect, network services may not be used even if it can be activate/deactivate.

Checking in the country you stay

When you arrive overseas and turn on the terminal, an available network operators/network is automatically connected.

Connection

The optimum network will be selected automatically if "Select automatically" of "Network operators" is set to ON.

Settings for overseas use

Setting data roaming

To perform packet communications overseas, the data roaming setting must be turned ON.

1. From the Home screen, ⊞ → "Settings" → "Connections" → "Mobile networks"
2. "Data roaming" → Confirm notes screen and tap "OK"

Setting a network operator

By default, the terminal automatically searches available network and connect to it. To switch network manually, set as follows.

1. From the Home screen, ⊞ → "Settings" → "Connections" → "Mobile networks" → "Network operators" → "Select automatically"
   - Available networks are displayed.
   - When an confirmation screen appears, tap "OK".
   - If the error occurs in network search, turn "Mobile data" OFF and retry (P.98).
2. Select the network of overseas network operator

Information

- If you set "Select automatically" to ON in Step 1, you can restore the network setting to detect and switch the network that can be used automatically.

Setting network mode

1. From the Home screen, ⊞ → "Settings" → "Connections" → "Mobile networks" → "Network mode"
2. "5G/4G/3G/GSM (auto connect)"/"4G/3G/GSM (auto connect)"/"3G/GSM (auto connect)"/"GSM only"

Date and time

When "Automatic date and time" in "Date and time" are set to ON, the clock time/time difference of the terminal is corrected by receiving information about time/time difference from the network overseas operator.

- Depending on the network provided by overseas network operator, time/time difference correction may not be performed correctly. Set the time zone manually if it is not performed correctly.
- Correction timing varies by overseas network operator in connection.
- "Date and time"(P.115)

About inquiries

- If the terminal or the nanoUIM card is lost or stolen overseas, immediately contact DOCOMO from the spot and request for suspension of usage. Please see the last page of this manual for contact information. You can also request for suspension of usage by My docomo. Be careful that you are charged also for calls and/or communications, if any, occurring after lost or theft.
- For contact from a land-line phone etc., add "International call access code" or "Universal number international prefix" assigned to the countries.
- If you use the ahamo plan, contact us from the ahamo website.

Making/Receiving calls in the country you stay

Making a call to outside country you stay (including Japan)

You can make a call from the country you stay to other country or area using the international roaming service.

- Prepending "+" to the front of the phone number, and then inputting the country code and phone number of the person you want to call enables you to easily make international phones calls to Japan from overseas or to other country or area.
- For information of available countries or network operators, see NTT DOCOMO website.

1 From the Home screen,

2 + (Touch and hold "0") → Enter Country code, Area code (city code), a phone number of the other party

- Please omit the prefix "0" in the area code (city code). However, "0" may be required to dial to some countries or areas such as Italy.
- If you call to the other party who is overseas "WORLD WING" user, enter the country code "81" (Japan).

3

- To make a video call, tap .

4 End a call,

Information

- For the details of video calls, refer to "Making a call" (P.57).

Making a call using international dial assist

Using international dial assist to call another country or area from overseas enables you to easily make international phone calls.

- You need to turn on the automatic phone number converter function for international dial assist in advance (P.131).
- The "0" at the front of the area number will automatically be converted to the preset country number.

1 From the Home screen,

2 Enter Area code (city code), a phone number of the other party

3
- When international dial assist screen appears, tap "Call by WORLD CALL".

4 End a call,

Making a call within the country you stay

You can make a call to a land-line phone or mobile phone in the same way as in Japan.

1 From the Home screen,

2 Enter the phone number
- To call a land-line phone, input the area code (city code) and then the person's phone number that you want to call.

3
- When "international dial assist" screen appears, tap "Call without int'l prefix".

4 End a call,

Making a call to WORLD WING user overseas

If you call to the other party who is using international roaming, even when he/she is in the country you stay, please make an international call to Japan.

- Regardless of in what country you stay, the communication is always performed via Japan.
  + (touch and hold "0") - 81 (Country code of Japan) - phone number omitting leading "0" .

Receiving a call in the country you stay

You can receive a call in overseas in the same way as in Japan.

Information

- When you receive a call during the international roaming, regardless of which country or area the call is from, it is forwarded internationally from Japan. A caller is charged for a call fee to Japan, and the receiver is charged for a reception fee.

Making a call from the other party

■ To have the other party in Japan call you overseas

If someone wants to call you while you are overseas from a land line or mobile phone in Japan, all they have to do is dial your phone number as if you were in Japan.

■ To have the other party make a call from outside Japan to the country you stay

Regardless of countries, you will receive a call via Japan. The other party should dial with prefix an international access code and "81" (Country code of Japan).

International access code of the country the dialer stays -81-90 (or 80, 70) -XXXX-XXXX

International roaming settings

Set up to use the international roaming service or international phone calls.

- Depending on overseas network operators, you cannot make the settings.

1 From the Home screen, C → ⋮ → "Settings" → "Network service and roaming settings" → "Roaming settings"

2 Change settings as required

Item	Description
Incoming call restriction while roaming	Set whether to restrict incoming phone calls during international roaming.
Incoming call notification while roaming	Set whether to be notified via SMS when you could not answer the phone when out of range, etc. during international roaming.
Roaming guidance	Set whether to play guidance to inform the person who called you during international roaming that you are in international roaming.
Network service	→ P.131

Setting Assist international call

1 From the Home screen, C → ⋮ → "Settings" → "Other call settings"

2 "Assist international call"

3 Select an item

Item	Description
Auto phone number conversion	Add the country code or international prefix automatically.
Country code	Select the country code used in the automatic conversion function.
International prefix	Select the international prefix used in the automatic conversion function.

Setting network service (overseas)

Set network services such as voice mail service from overseas.

- Activate "Remote operation" beforehand (P.65).
- For operations from overseas, international call fee to Japan in the country you use is charged.
- Depending on overseas network operators, you cannot make the settings.

1 From the Home screen, C → ⋮ → "Settings" → "Network service and roaming settings" → "Roaming settings"

2 "Network service" → Select a service

Item	Description
Remote operation (charges apply)	Set whether to start remote operation.
Caller ID display request service (charges apply)	Set to notify a caller with voice prompt to request caller ID when receiving an anonymous call.
Incoming call notification while roaming (charges apply)	→ P.131
Roaming guidance (charges apply)	→ P.131
Voicemail service (charges apply)	Set the terminal to take a message from a caller while you are outside the service area or you turn the terminal OFF. (Subscription is required.)
Call forwarding service (charges apply)	You can forward calls that you receive to another mobile phone that you register in advance. (Subscription is required.)

3 Follow the onscreen instructions

4 Follow the voice guidance

After returning to Japan

After returning to Japan please return to the setting before traveling.

■ If you used packet communication overseas

- Turn the "Data roaming" (P.128) settings to "OFF".

■ If you can not connect to DOCOMO's network automatically after returning to Japan

- Set "Network mode" of "Mobile networks" to "5G/4G/3G/GSM (auto connect)" (P.128).
- Set "Select automatically" of "Network operators" in "Mobile networks" to ON (P.128).

Appendix

Troubleshooting (FAQ)

Troubleshooting

- If you suspect the terminal does not operate correctly, you can check with diagnostics by yourself.
  For details, see NTT DOCOMO website.
- First, check if software update is needed and if it is necessary, update the software (Updating software) (P.138).
- When problems do not improve after checking the following items, contact by the following method. Please see the last page of this manual for contact information.

Power

Trouble	Check and remedy
Cannot turn on the terminal.	• Is the battery exhausted? → P.28
Screen is frozen, cannot turn off the power.	• Restart the terminal forcibly by pressing and holding [Side key] and volume DOWN key for 7-8 seconds when the screen is frozen or you cannot turn the power off. * Note that data and the settings may be erased since the operation restart forcibly.

Charging

Trouble	Check and remedy
Cannot charge the terminal.	• Is the power plug of adapter correctly inserted to an outlet or accessory socket? • Are the adapter and terminal inserted correctly? • When using the AC adapter (sold separately), is the Type-C plug of AC adapter firmly connected to this terminal? → P.29 • When using a USB cable A to C 02 (sold separately), is the power of the PC turned on? • If you execute calls, communications or other operation for a long time while charging, hot and cannot charge the terminal. In this case, wait until the temperature of the terminal drops down and retry charging.

Operating terminal

Trouble	Check and remedy
Become hot while operating/ charging.	• While operating or charging, or if you operate apps for a long time while charging, the terminal or adapter may become hot. There is no operation problems and you can continue to use it.

Trouble	Check and remedy
The operation time is short.	• Is the terminal left for a long time out of service area? Staying outside of the service area may consume much power to search available radio waves for communication. • The operating time of the internal battery varies depending on the operating environment and the secular degradation of the internal battery. • The internal battery is a consumable accessory. The usage duration of the battery per 1 charge decreases gradually each time the battery is recharged. Even if you sufficiently recharge the terminal but usage time significantly decreases differ from default state, this means that the internal battery needs to be replaced. We takes the terminal to replace the parts as a chargeable service. Check "Warranty and After-Sales Service" (P.139) since the repair's reception desk will be taking care of the service. • Is the multiple apps booted? Close the apps you are not using. → P.41 • Set Bluetooth to OFF when you are not using. → P.122
No operation is performed even when tapping the touch screen.	• Is the screen locked? Press [Side key] to unlock screen lock. → P.30, P.106
The touch screen reacts slowly when a screen is tapped.	• It may be occurred when large amount of data is saved in the terminal or transferring large-size data between the terminal and microSD card. • Do you attach a protection sheet on the terminal? The operations may be impeded by the protection sheet.
The nanoUIM card is not recognized.	• Is the nanoUIM card installed with a correct direction? → P.23

Trouble	Check and remedy
Time is incorrect.	• It may be occurred if the terminal keeps turned on for a long time. Check if "Automatic date and time" is set to ON, and turn on the terminal at places where signal is strong. → P.115
Terminal becomes unstable.	• It may be caused by apps installed to the terminal after purchase. If problems improve when you start in Safe mode (a function to activate the terminal in a mode similar to default), problems may be improved by uninstalling the app. - To start Safe mode Press [Side key] for 2 seconds or more when power is OFF, and after Galaxy logo appears, continue to press Volume DOWN key. When power is ON, press [Side key] for 1 second or more → touch and hold "Power off" → tap "Safe mode". * When Safe mode starts, "Safe mode" appears on the lower left corner of the screen. * To terminate Safe mode, turn on the terminal again. - For using Safe mode, back-up the required data beforehand. - Note that apps or widgets you created may be removed. - Safe Mode is not normal activation. Usually exit Safe Mode and then use the terminal.
Terminal reacts slowly/Behaviors become unstable/ Some of the program cannot activate.	• Confirm the internal memory usage of the terminal and obtain memory by ending some activated programs. → P.113
Data is not displayed properly/ Cannot operate the touch screen properly.	• Turn off and on the power. If it does not solve the problem, trying "Factory data reset" (P.116) may improve the symptoms. Note that the operation erases all data saved on the terminal. Make sure to back up necessary data beforehand.

Trouble	Check and remedy
App does not work properly (cannot activate, errors occur frequently, etc.).	• Are there any apps being disabled? Enable the disabled apps and try again. → P.114

Calling

Trouble	Check and remedy
Cannot make a call even though Call key is tapped.	• Is the nanoUIM card installed to the terminal correctly? → P.23 • Is the terminal set to Airplane mode? Set the Airplane mode off, and retry. → P.98
The ringtone does not sound.	• Is the "Volume" set to minimum? → P.101 • Is "Ringtone" set to "Silent"? → P.102 • Is the terminal set to Manner mode (Vibrate, Mute)? → P.101 • Is the terminal set to "Block numbers"? → P.63 • Is the terminal set to Airplane mode? → P.98 • Is the ring time of Voice mail service or Call forwarding service to "0 second"? → P.65 • Is the Play after of Answering message set to "0 seconds"? → P.62
Cannot connect calls (out of area does not disappear even when you change the location, or cannot make/receive a call even when radio wave when strong).	• Turn the power off and on, or remove and attach the nanoUIM card. → P.30, P.23 • Due to the radio wave types, making/receiving calls may be unavailable even in the service area and even when strong radio wave is indicated in 4 signal marks. Move to the other place and call again. • Is the terminal set to "Block numbers"? → P.63 • Due to the crossing of radio waves, at the crowded public places, calls/mails are crossed and the connection status may not be good. In that case, calling sound is played. Move to other place or call again at other time.

Trouble	Check and remedy
Cannot connect to network.	• Do you use at a place where signal is weak? • Turning the terminal power OFF and then turning ON again may work for the restoration. → P.30

Display

Trouble	Check and remedy
The display is dimmed.	• Is the time set on "Screen time out" over? → P.103 • Do you adjust the brightness of the display? → P.104 • Is the terminal set to Power saving mode? → P.112 • Is the battery level low? → P.119

Voice

Trouble	Check and remedy
During a voice call, the other party's voice is hard to be heard to or too loud.	• Do you change the listening volume? → P.61

Mail

Trouble	Check and remedy
Mail is not received automatically.	• Do you set "Sync contacts" to OFF? Set it ON. → P.73

Camera

Trouble	Check and remedy
Still images and videos shot with the camera are blurred.	• Check if clouds or dirt attach to the lens of camera.
Cannot launch Camera	• Wait for a while and retry the operation or turn the power off then turn on the terminal. Check the battery level and available memory space of the terminal.
Recording failed	• Exit the camera app and restart the app.

Osaifu-Keitai

Trouble	Check and remedy
Cannot use Osaifu-Keitai.	• If you activate Omakase Lock, Osaifu-Keitai function cannot be used regardless of NFC/Osaifu-Keitai lock settings. • Check if you activate NFC/Osaifu-Keitai lock. → P.87 • Check if you hold the mark position on the terminal over a reader. → P.87

International roaming

Trouble	Check and remedy
Cannot use the terminal overseas.	■ **If the signal mark is displayed** • Do you subscribe to WORLD WING? Check the subscription of WORLD WING. ■ **If out of area is displayed** • Are you out of the service area of the international roaming service or in weak radio wave area? Check if it is available service area or overseas network operator with NTT DOCOMO website. • Try to change the network settings or settings for overseas communication operator. Set "Network mode" to "5G/4G/3G/GSM (auto connect)". → P.128 Set "Select automatically" of "Network operators" to ON. → P.128 • Turning the terminal power OFF and then turning ON again may work for the restoration. → P.30
Cannot use data communication overseas.	• Set "Data roaming" to ON. → P.128
The terminal cannot be used suddenly while you use it overseas.	• Is the limit of maximum charges for use exceeded? A limit of maximum charges for use is set beforehand if you use "International Roaming Service (WORLD WING)". If the limit of maximum charges for use is exceeded, check out your accumulated fee.
There is no incoming call overseas.	• Is "Incoming call restriction while roaming" set to ON? → P.131

Trouble	Check and remedy
No caller ID is notified/A notified caller ID is different from that of the caller/ Functions for using contents saved in Contacts or those using Caller ID notification do not operate.	• Even though a caller notifies the caller ID, it is not displayed on the terminal if the network or network operator does not notify the ID. A notified caller ID may be different from that of the caller by some networks or networks operators you use.

Data Management

Trouble	Check and remedy
Data transfer is not performed.	• Do you use USB HUB? When USB HUB is used, the terminal may not be operated correctly.
Data saved in microSD card is not displayed.	• Mount microSD card. → P.113 • Remove and attach microSD card. → P.26
Image is not displayed.	• If the image data is damaged, it is not displayed correctly, for example, a black screen appears.
No operation is performed even by connecting the terminal to a PC.	• Install Galaxy Smart Switch or Windows Media Player 12 or later to a PC.

Bluetooth

Trouble	Check and remedy
Cannot connect to Bluetooth device/ Bluetooth device cannot be found by scanning.	• The Bluetooth device (commercial item) is needed to be in registration stand-by state. If you register the device again after deleting the registration, delete the registrations on both Bluetooth communication device and the terminal, and then perform registration of the devices.
Cannot call from the terminal with external device connected such as car navigation or hands-free device.	• If you made several calls to a person when he or she does not answer the calls or is out of the service area etc., calling the number may become unavailable. Turn the power off then on the terminal.

Error message

Error message	Cause and remedy	Page
The application XXXX (process XXXX) has stopped unexpectedly. /XXXX (XXXX) has stopped.*	Appears when an error is occurred in the terminal or function. Tap "Force close"/"OK" and then retry.	–
Mobile networks cannot use.	The nanoUIM card is not correctly installed to the terminal. Make sure that the nanoUIM card is correctly attached.	P.23
Temporarily turned off by your carrier	Appears when communication is restricted due to access congestion on call/communication. Operate again after the restriction is released.	–
Request to switch to video call failed.	Appears when switching to video call fails. Switching is not possible during emergency call and audio guide, when the other party is using Catch Phone (call waiting service), when calling outside the service area, etc.	P.60
Request to switch to voice call failed.	Appears when switching to voice call from video call fails due to connection error, etc. Please wait for a while and try the operation again.	P.60
Make a video START.	Appears when making video call fails. Make sure that you are in service area, and check the calling mode settings, settings of mobile network, etc.	P.57

* XXXX indicates app or function name in which an error is occurred.

Updating software

Software update

Download update file for the terminal from the download site on the Internet and update the software. For software update, there are 2 methods; connecting to the network directly on the terminal and using Galaxy Smart Switch PC (P.124) installed to a PC.

Precautions on software update

Software update can be done with the data saved to the terminal remained. However, note that depending on your terminal condition (malfunction, damage, water-soaked, etc.), the data may not be protected. You are recommended to backup the user information and data in the terminal just in case. However, some data may not be backed up.

- Prepare the following before software update.
  - Exit all programs running on the terminal (P.41).
  - Charge (P.28) the terminal to make the battery level enough.
- For updating software by connecting the terminal to network directly, you are recommended to perform in a place with good signal condition, without moving. When the signal condition is bad, software update may be interrupted.
- It may take time to update software (download and installation of update files).
- During installing the update files for software update, all functions including making/receiving phone call are not available.
- To update the software while you are overseas, connect to Wi-Fi network (with the nanoUIM card removed).
- When you cannot perform any operations because of the failure of the software update, contact us. Please see the last page of this manual for contact information.

Updating software only with the terminal

You can update the software of the terminal by connecting network with the terminal.

1 From the Home screen, ⊞ → "Settings" → "Software update" → "Download and install"

- If you download update file automatically when connecting via Wi-Fi, set "Auto download over Wi-Fi" to ON.

2 Set according to the onscreen instructions

- Operating the terminal to update after the updating file has been downloaded successfully restarts the terminal and starts the update. You cannot use the phone and other functions while updating the software.

Information

- After downloading the software, you may postpone the installation by tapping either "Schedule install" on the installation confirmation screen.
  You can start the installation immediately by performing the following steps, even after you have postponed the installation:
  - From the Home screen, ⊞ → "Settings" → "Software update" → "Download and install" → "Install now"
  - Open the Notification panel → "Software update" → "Install now"
- The available network may be restricted depending on the content of the update.
- If the downloading the update file is failed, please wait for a while and try the operation again.

Warranty and After-Sales Service

Warranty

- The warranty is valid for a period of one year from the date of purchase.
- SIM ejector tool is are not covered by the free repair warranty.
- SIM ejector tool is sample. Refer to inquiries for sample accessories.
- Specifications and appearance of this product and all accessories are subject to change, in part or whole, for the sake of improvement without prior notice.
- Since troubles, repair or other handling of the terminal may cause contents in the Contacts etc. to be modified or deleted. DOCOMO recommends making a copy of the Contacts data etc., in case.

* With the terminal, data such as phonebook entries can be saved to microSD card.
* Data such as phonebook entries can be backed up using docomo cloud.
* Some apps and services may not be available depending on your contract. For details, see the NTT DOCOMO website.

Conditions for free repair

1 If you use the terminal in accordance with the warnings stated in this manual and faults occur within the warranty period, the terminal will be repaired for free. (Your terminal may be replaced with an equivalent instead of repairing it.)
2 The following case are not subject to free repair even if they occur during the warranty period:
(1) Faults and damage caused by modifications (including software modifications).
(2) Faults and damage caused by the terminal, display, and/or external connection terminal breaking from external pressure or being dropped, or faults and damage caused by the motherboard inside the terminal breaking or deforming.
(3) Faults and damage caused by fires, pollution, abnormal voltage, earthquakes, thunder, floods, or other natural disasters.
(4) Faults and damage caused by connecting devices and consumables to the terminal that are not DOCOMO-approved.
(5) Faults and damage caused by water entering the terminal, the terminal's water leak seal is showing signs of leaks, indications that the terminal was dropped in water or signs of leaking were discovered, or corrosion caused by condensation or the like is discovered.
(6) The case where you have repaired at a location other than the DOCOMO-specified repair place.

3 This warranty is valid only in Japan.
4 This warranty is for free repairs in the stated period and conditions, and does not restrict lawful customer rights.
5 If there are multiple defects on the terminal, all the defects will be repaired as product quality cannot be guaranteed by just fixing some faults. In that case, some faults may not be subject to free repair.
6 Regardless of whether repairs were performed or not, terminals that underwent performance testing will be returned with the latest software updates.
7 See the repairs result form that you receive once repairs are complete to check the date of repairs and what repairs were performed.

<Sales>
NTT DOCOMO, INC.
11-1, Nagata-cho 2-chome, Chiyoda-ku, Tokyo Japan

After-Sales Service

When problems occur

Before requesting repair, read the section on "Troubleshooting" in this manual.

If repair is required

Take your terminal to DOCOMO-specified repair place (shop or website).
Please see the last page of this manual for contact information.
Note that, repair may take longer time depending on the state of damage.

After expiration of the warranty

All repairs that are requested are charged.

Replacement parts

Replacement parts (parts required to maintain the product functions) are basically kept in stock for at least 4 years after termination of production.
For details about technical inquiries and repairs, see the website.
However, depending on the malfunctioning part, repair may not be possible due to a lack of replacement parts. Please contact a repair place specified by DOCOMO.
Please see the last page of this manual for contact information.

Notes

- Do not modify terminal or its accessories.
  - Doing so may cause fire, injury or damage.
  - Modified terminals etc. are repaired only after the customer accepts that the modified parts are to be restored to the condition at the time of purchase. However, repair may be refused depending on the nature of modification.
    The following cases may be regarded as modifications.
    - A sticker etc. is put on the display part or keypad part.
    - The terminal is embellished with adhesive.
    - Exteriors are replaced with other than DOCOMO's genuine parts.
  - Repair of failures or damage caused by modification is charged even during the warranty period.
- Data such as settings for each function may be cleared (reset) by malfunctions, repair or other handling of terminal. Should that happen, set up the functions again. A packet communication fee may be charged due to the settings.
- When the repair is executed, MAC address of Wi-Fi/Bluetooth address in the terminal may be changed regardless of repaired part.
- Do not allow cash cards or other devices that are vulnerable to magnetism to come into contact with the phone.
- The terminal is waterproof. If inside of the terminal gets wet or moist, immediately turn the power off, we recommend to repair the terminal at a repair place specified by DOCOMO as soon as possible. However, repair may not be possible depending on the condition of terminal.

Precautions on data created by you and downloaded data

Note that data you created, retrieved or downloaded from sources other than your terminal may be changed or lost when you change the model or have repairs done to the terminal. DOCOMO shall have no liability for any change or loss of any kind. Please understand beforehand that we can not compensate for packet communication charges generated by re-downloading data. Under some circumstances, DOCOMO may replace your terminal with its equivalent instead of repairing it. When replacing your phone, most of the above-mentioned data cannot be transferred to the new phone.

Main specifications

Phone

Product name		SC-56C
Size		Height: Approx. 149.9 mm, Width: Approx. 71.3 mm Thickness: Approx. 8.99 mm (Maximum thickness: Approx. 9.3 mm)
Weight		Approx. 168 g
Display	Size	Approx. 5.8 inch
	Type	TFT
	Resolution (number of pixels horizontal x vertical)	HD+ (720X1560)
Memory		RAM: 4 GB ROM: 64 GB *1
Battery	Battery	4000 mAh
	Rated value per watt hour	15.06 Wh
Continuous stand-by time*2	4G (LTE)	Approx. 491 H
Continuous call time*3	4G (LTE)	LTE (VoLTE)	Approx. 1690 min.
		LTE (VoLTE: Video call)	Approx. 540 min.
Charging time		AC adapter 08: Approx. 110 min*4

Wireless LAN	Corresponding standard	IEEE802.11a/b/g/n/ac compliant (IEEE802.11n: 2.4GHz/5GHz)
	MIMO support	—
	Support MU-MIMO (Client)	—
	MIMO compatible standard	—
	Support MU-MIMO (Client) standard	—
Bluetooth	Version*5	5.2
	Output	Power Class 1
	Compatible profile*6 / Codec	HFP (mSBC: 16kHz / CVSD) (1.7), HSP (1.2), OPP (1.2), SPP (1.2), HID (1.0), A2DP (aptX/SBC/AAC/LDAC) (1.3), AVRCP (1.6), PBAP (1.2), PAN (PAN-NAP / PANU) (1.0), SAP (1.1), HOGP (1.0), MAP (1.2), DI (1.3)
Headphone connection jack	Terminal diameter	3.5 φ earphone jack
	Pole number	4 pole

Camera	Image pickup device	Type	Rear camera: Back-illuminated CMOS Front-camera: Back-illuminated CMOS
		Size	Rear camera: 1/3.0 inch Front-camera: 1/5 inch
	Number of effective pixels on Camera		Rear camera: Approx. 13 mil. pixels Front-camera: Approx. 5 mil. pixels
	File format	Video	MP4
		Still image	JPEG
	Maximum recording time per item		No limit (depending on memory size)*7
	Digital zoom	Video	Rear camera: Up to Approx. 10 x Front-camera: -
		Still image	Rear camera: Up to Approx. 10 x Front-camera: -
	Zoom (optical)	Video	Rear camera: - Front-camera: -
		Still image	Rear camera: - Front-camera: -
	Digital zoom x Optical zoom	Video	Rear camera: - Front-camera: -
		Still image	Rear camera: - Front-camera: -
Movie	Supported codecs		H.263, H.264 (AVC), MPEG4, VC-1, VP8, VP9, H.265 (HEVC), AV1
Music	Supported codecs		MP3, AMR-NB/WB, AAC/AAC+/eAAC+, Vorbis, FLAC, Opus, AC3, E-AC3, AC4

Multilingual	Display language	Japanese/English/Korean/Chinese/Spanish/French/Indonesian/Malay/Portuguese/Vietnamese/Arabic
	Language	Japanese/English/Korean
Answering message	Number of storable items	No limit*8
	Maximum recording time per item	Approx. 13 H

*1 Not all of the memory capacity is available for saving shot videos and still images, downloaded apps and data, and other data. For available memory space, refer to "storage" (P.113).

*2 Stationary continuous stand-by time is the estimated average operation time when radio signal reception is normal in the stationary state.
The continuous stand-by time fluctuates greatly due to the settings, use environment, and call, email, and camera use frequency.
If you use functions a lot, the actual time may drop by more than half.

*3 The continuous stand-by time fluctuates greatly due to the settings, use environment, and call, email, and camera use frequency.
If you use functions a lot, the actual time may drop by more than half.

*4 The numerical value of when "Fast charging" is ON. From the Home screen, ⊞ → "Settings" → "Battery and device care" → "Battery" → "More battery settings" → "Fast charging".

*5 However, procedures may differ or data transfer may not be possible depending on the device's characteristics or specifications.

*6 Bluetooth compatible devices with specifications according to the intended use, Bluetooth standards.

*7 This is the shooting time when the movie size (rear) is 1920 × 1080 (FHD).

*8 The maximum saved number varies depending on the free space of the memory of this terminal.

FCC notice

- This device complies with part 15 of the FCC Rules. Operation is subject to the following two conditions:
  (1) This device may not cause harmful interference, and (2) this device must accept any interference received, including interference that may cause undesired operation.
- Changes or modifications not expressly approved by the manufacturer responsible for compliance could void the user's authority to operate the equipment.

Information to User

This equipment has been tested and found to comply with the limits of a Class B digital device, pursuant to Part 15 of the FCC Rules. These limits are designed to provide reasonable protection against harmful interference in a residential installation. This equipment generates, uses and can radiate radio frequency energy and, if not installed and used in accordance with the instructions, may cause harmful interference to radio communications.
However, there is no guarantee that interference will not occur in a particular installation; if this equipment does cause harmful interference to radio or television reception, which can be determined by turning the equipment off and on, the user is encouraged to try to correct the interference by one or more of the following measures:

1. Reorient/relocate the receiving antenna.
2. Increase the separation between the equipment and receiver.
3. Connect the equipment into an outlet on a circuit different from that to which the receiver is connected.
4. Consult the dealer or an experienced radio/TV technician for help.

FCC RF exposure information

Your mobile device is a radio transmitter and receiver. It is designed not to exceed the limits for exposure to radio waves (radio frequency electromagnetic fields) adopted by the Federal Communications Commission (FCC).
These limits include a substantial safety margin designed to assure the safety of all persons, regardless of age and health.

The radio wave exposure guidelines use a unit of measurement known as the Specific Absorption Rate, or SAR. The SAR limit for mobile devices is 1.6W/kg.

Tests for SAR are conducted using standard operating positions with the device transmitting at its highest certified power level in all tested frequency bands.
The highest SAR values under the FCC guidelines for this device model are:

Head : 0.99 W/Kg
Body-worn accessory : 0.49 W/Kg

During use, the actual SAR values for this device are usually well below the values stated above.
This is because, for purposes of system efficiency and to minimize interference on the network, the operating power of your mobile device is automatically decreased when full power is not needed for the call.
The lower the power output of the device, the lower its SAR value.

Body-worn SAR testing has been carried out at a separation distance of 1.5 cm. To meet RF exposure guidelines during body-worn operation, the device should be positioned at least this distance away from the body.

Organizations such as the World Health Organization and the US Food and Drug Administration have suggested that if people are concerned and want to reduce their exposure, they could use a hands-free accessory to keep the wireless device away from the head and body during use, or reduce the amount of time spent using the device.

Note:
The maximum SAR value listed above is the value recorded for the latest version of this handset.
Earlier versions may have different measured SAR values, which are detailed in the User Manuals that accompany those handsets.

Body-worn operation

For body worn operation, this phone has been tested and meets the FCC RF exposure guidelines. Please use an accessory designated for this product or an accessory which contains no metal and which positions the handset a minimum of 1.5 cm from the body.
The use of accessories that do not satisfy these requirements may not comply with FCC RF exposure requirements, and should be avoided.
The FCC has granted an Equipment Authorization for this model handset with all reported SAR levels evaluated as in compliance with the FCC RF emission guidelines. SAR information on this model handset is on file with the FCC and can be found under the Display Grant section of https://www.fcc.gov/oet/ea/fccid after searching on FCC ID A3LSMA223JPN.
Additional information on Specific Absorption Rates (SAR) can be found on the Cellular Telecommunications & Internet Association (CTIA) Website at https://www.ctia.org/.

Intellectual Property Right

Copyrights

The works and copyright of music, video picture, computer program, data base, etc., are protected their right by copyright law. Copying such copyrighted works can be permitted only for the purpose of personal use or use at home. If you copy (including conversion of data format), alter, hand over of duplication, distribute on network, etc., without any approval of copyright owner exceeding above mentioned purposes, you may be claimed for damages or punished as "copyright infringement" or "infringement of moral right of an author". When you make duplications etc. using this product, please observe the copyright law and use them properly. Also, for recorded items using the camera function mounted to this product, please use them properly as above.

Portrait rights

Portrait rights are claimable rights against taking photos by others, publishing or using the taken photos without any permission. In Portrait rights, there are moral right authorized to everyone and property right (publicity right) focused on economic benefit of talent etc. Therefore, taking photos of others or talent, publishing or distributing the photos without any permission are illegal act. Please use the camera function properly.

Trademarks

- "FOMA", "my daiz", "WORLD CALL", "WORLD WING", "sp-mode", "dmenu" logo, "iD" logo are trademarks or registered trademarks of NTT DOCOMO.
- Bluetooth® and Bluetooth® logo are owned by the Bluetooth SIG, INC.

Bluetooth®

- Wi-Fi Certified® and its logo are registered trademark or trademark of Wi-Fi Alliance.

Wi Fi CERTIFIED

- Catch Phone (Call waiting service) is a registered trademark of Nippon Telegraph and Telephone Corporation.
- iWnn© OMRON SOFTWARE Co., Ltd. 2008-2021 All Rights Reserved.
- Disney DX appli that Walt Disney Company (Japan) Ltd., its parent or their affiliates (collectively, "Disney") own, co-own or license copyright and other intellectual property rights. Please read the Disney+ Terms of Use before use.
- Manufactured under license from Dolby Laboratories. Dolby, Dolby Atmos, and the double-D symbol are trademarks of Dolby Laboratories.
- Other products and company names written in this manual are registered trademarks or trademarks of each company.

HEVC Advance

HEVC Advance™
Covered by Patents at patentlist.hevcadvance.com

MORE

- This product is licensed based on MPEG-4 Visual Patent Portfolio License. The use of MPEG-4 Video Codec function is allowed for personal and nonprofit use only in the cases below.
  - Recording moving pictures that conform to MPEG-4 Visual Standard (hereinafter referred to as MPEG-4 Video)
  - Playing MPEG-4 Videos recorded personally by consumers not engaged in profit activities
  - Playing MPEG-4 Video supplied from the provider licensed from MPEGLA.

  For further utilizing such as promotion, in-house use or profit-making business, please contact MPEG LA, LLC in U.S.

Index

Index

A

AC adapter 29
Charging 29
Access point
Initializing 98
Settings 98
Accounts 111
Removing 111
Settings 31
Adjusting volumes 101
Advanced features 35
Airplane mode 98
Answering message 62
Apps 114
Apps screen 53
Available overseas services 127

B

Blocking call receptions and SMS from specified phone number 66
Bluetooth 122
Brightness 104

C

Calculator 92
Calendar 90
Caller ID notification 65
Call forwarding service 65
Call settings 63
Call waiting 65
Camera 77
Setting 80
Shooting screen 78
Shooting still images 79
Shooting videos 79
Canceling screen lock 30
Character entry 36
Copying 37
Cutting 37
Pasting 37
Settings 38
Charging 28
Checking your own phone number 119
Clock 89
Alarm 89
Stopwatch 90
Timer 90
World clock 89
Connecting to a PC
Connecting with USB cable A to C 124

D

Data usage 99
Display 103
dmarket 84
dmenu 84
docomo apps management 109
docomo Data Copy 93
docomo LIVE UX 45
docomo mail 69
Double-tap 33
Drag 33

E

Early Warning "Area Mail" 74
Easy mode 103
Edge panels 50
Email 72
Creating and sending 72
Received 73

Setting account 72
Settings 73
Emergency call 58

F

Face recognition 107
Flick 33

G

Galaxy account 31
Galaxy keyboard 36
Keyboards types 36
Galaxy Notes 91
Galaxy Smart Switch 124
Galaxy Store 85
Gallery 83
Gmail 74
Google Maps 89
Google Play 85
GPS 88

H

Hold call 61
Home screen 45

I

iD application 88
Initial settings 31
Internal battery
Charging time 141
Continuous call time 141
Continuous stand-by time 141
Internal battery life 28

L

Location information 88
Lock screen 30

M

Mail 69
+Message 69
docomo mail 69
Email 72
Gmail 74
Main specifications 141
Making a Call 57
Phonebook 68
Recents 61
Making an international call (WORLD CALL) 63
Manner mode 101
microSD card 25
Attaching 26
Formatting 28
Removing 27
My Files 120
My Magazine 49

N

nanoUIM card 22
Attaching 23
PIN code 32
Removing 24
Navigation bar 34
NFC/Osaifu-Keitai settings 98
Notification panel 40
Notification sound
Settings 102

O

One UI Home 51
Osaifu-Keitai 86
Overview of international roaming (WORLD WING) 127

P

Phonebook 66
Making a Call 68
Registering 66
Pinch in 34
Pinch out 34
Play Store 85
Power saving mode 113
Printing 125
Public mode (power OFF) settings 65

R

Receiving a call 59
Recent Call 61
Recently-used apps 41
Reject a call 59
Registering reason of rejection to send via SMS when rejecting call 66
Send message 59
Ringtone
Settings 102

S

Screen capture 34
Scroll 33
Security code
Network security code 32
PIN code 32
PUK code 32
Setting menu 95
Setting screen lock 30
Setting unlock method for the screen lock 106
Setting Vibration pattern 102
Set up SIM card lock 32
S Health 94
Smart Switch 124
Smart View 126
Specific Absorption Rate (SAR) 143
Split screen view 42
sp-mode 98
Status bar 39
Main notification icons 39
Main status icons 39
Still image
Shooting 79
Viewing 83
Storage 113
Swipe 33
Switching keyboard types (input method) 36
Switching the orientation of the display automatically 34

T

Tap 33
Touch and hold 33
Touch screen 33
Turning power ON/OFF 30

U

Updating software 138

V

Video
Playing 83
Shooting 79
Video call
Calling screen 60
Voicemail service 65
Voice Recorder 92
VPN 100

W

Waterproofness/Dustproofness 18
Web browser 75

Wi-Fi 96
WORLD CALL 63

Symbol

+Message 69
Deleting a message 71
Deleting a thread 71
Forwarding a message 71
Reading a message 71
Send message 70
Settings 71

Use mobile phone with your manners!

Remember to be courteous to others when you use your terminal.

Always turn OFF your terminal in cases below

■ In a place where use of mobile phones is prohibited
Follow the instructions of each airline or medical facility for the use of mobile phones on their premises. Power off the terminal in a place where the use is prohibited.

Always set to public mode in case below

■ When driving
Be careful when using the terminal while driving. Except for situations which are stipulated as per laws and regulations, the looking at the terminal's screen, or the holding of the terminal in one's hands and conversing while driving shall be subject to penalty.

■ When you are in a public place such as a theater, movie theater, museum, library
Using the terminal in a public place, where you need to be quiet, annoys people around you.

Be considerate of where you use your terminal and keep your voice and ringtone down

■ Keep your voice down in quiet places like restaurants and hotel lobbies, etc.

■ If you are in an outdoor public place, make sure you do not disturb others.

Respect privacy

■ Please be considerate of the privacy of individuals around you when taking and sending photos using camera-equipped mobile phones.

Do not use smartphone while walking

■ Walking while looking at the screen of a smartphone or cell phone is very dangerous. The field of view narrows extremely and may lead to accidents involving not only yourself but also those around you.

■ Stop in a safe place and then use smartphone.

Functions for maintaining good manners in public places

There are some advanced settings such as not answering incoming call or muting sound, etc.

■ Public mode (power OFF) (P.65)
Tells the caller via a guidance message that receiver need to turn the power off, and the call ends automatically.

■ Vibration (P.102)
Notify the call by vibration.

■ Silent mode (Vibrate, Mute) (P.101)
Mute sound/ringtone, etc.
* Shutter sound cannot be muted.

Besides these things, option services such as Voice Mail Service (P.65), Call Forwarding Service (P.65). etc., are available.

Checking various procedures and contract details online

From the terminal	dメニュー (dmenu) → "My docomo" (In Japanese only)
From PC	My docomo (https://www.nttdocomo.co.jp/mydocomo/) (In Japanese only)

● There are cases where the site may not be available due to system maintenance, etc.
● "Network security code" or "ID/Password" of dACCOUNT is required to use "My docomo".

Bring no longer needed mobile telephones, etc., to your nearest docomo Shop to be recycled regardless of whether the products were manufactured by DOCOMO or by other companies.
* Recyclables: mobile telephones, PHS, batteries, battery chargers, tabletop stands (regardless of whether manufactured by DOCOMO or by other companies)

General Inquiries <docomo Information Center>

0120-005-250 (toll free)

* Service available in: English, Portuguese, Chinese, Spanish
* Unavailable from part of IP phones. (Business hours: 9:00 a.m. to 8:00 p.m.)

■ From DOCOMO mobile phones (In Japanese only)

(No prefix) 151 (toll free)

* Unavailable from land-line phones, etc.

■ From land-line phones (In Japanese only)

0120-800-000

* Unavailable from part of IP phones.

Business hours: 9:00 a.m. to 8:00 p.m. (open all year round)

Technical Inquiries & Repairs

■ From DOCOMO mobile phones

(No prefix) 113 (toll free)

* Unavailable from land-line phones, etc.

■ From land-line phones

0120-800-000

* Unavailable from part of IP phones.

Business hours: 24 hours (open all year round)

● Please confirm the phone number before you dial.
● For Applications or Repairs and After-Sales Service, please contact the above-mentioned information center or the docomo Shop etc. near you on the NTT DOCOMO website.
● For details about technical inquiries and repairs, see NTT DOCOMO website.
NTT DOCOMO website https://www.nttdocomo.co.jp/english/

For inquiries while overseas (for loss, theft, malfunction, etc.)

■ From DOCOMO mobile phones

Before calling, display "+" -81-3-6832-6600 (toll free)

(To enter "+", touch and hold the "0" key)

* You can use international call access codes instead of "+" to call.

■ From land-line phones

International call access code for the country you stay -81-3-6832-6600 (toll)

* You are charged a call fee to Japan.
* For international call access codes, refer to NTT DOCOMO website.

Business hours: 24 hours (open all year round)

● Please confirm the phone number before you dial.
● If you lose your terminal or have it stolen, immediately take the steps necessary for suspending the use of the terminal.
● If the terminal you purchased is damaged, bring your terminal to DOCOMO-specified repair office after returning to Japan.

Customers with ahamo plan contracts

■ Technical Inquiries
ahamo website
https://ahamo.com/

For Inquiries about Sample

■ Galaxy Customer Support Center (In Japanese only)
https://www.galaxymobile.jp/support/

● Check the supplied sample accessories in this manual.

危険です、歩きスマホ。

キケン！水ぬれ充電

あぶない！電池への衝撃

Li-ion 00

Sales: NTT DOCOMO, INC.
'21.10 (1st Edition)