CERTIFICATION TEST REPORT

Report Number. : 4789582668-E8V2

Applicant : SAMSUNG ELECTRONICS CO., LTD.
129 SAMSUNG-RO, YEONGTONG-GU, SUWON-SI,
GYEONGGI-DO, 16677, KOREA

Model : SC-54A, SCG07

FCC ID : A3LSMA516JPN

EUT Description : GSM/WCDMA/LTE Phone + BT/BLE, DTS/UNII a/b/g/n/ac, ANT+ and NFC

Test Standard(s) : FCC 47 CFR PART 15 SUBPART C

Date Of Issue:
August 28, 2020

Prepared by:
UL Korea, Ltd.
26th floor, 152, Teheran-ro, Gangnam-gu Seoul, 06236, Korea

Suwon Test Site: UL Korea, Ltd. Suwon Laboratory
218 Maeyeong-ro, Yeongtong-gu,
Suwon-si, Gyeonggi-do, 16675, Korea
TEL: (031) 337-9902
FAX: (031) 213-5433

IAS ACCREDITED
Testing Laboratory
TL-637

Revision History

Rev.	Issue Date	Revisions	Revised By
V1	08/26/20	Initial issue	Sungeun Lee
V2	08/28/20	Updated to address TCB's question	Sungeun Lee

UL Korea, Ltd. Suwon Laboratory FORM ID: FCC_15C(04)
218 Maeyeong-ro, Yeongtong-gu, Suwon-si, Gyeonggi-do, 16675, Korea TEL: (031) 337-9902 FAX: (031) 213-5433
UL Korea, Ltd. Confidential
This report shall not be reproduced except in full, without the written approval of UL Korea, Ltd.

TABLE OF CONTENTS

1. ATTESTATION OF TEST RESULTS 4

2. TEST METHODOLOGY 5

3. FACILITIES AND ACCREDITATION 5

4. CALIBRATION AND UNCERTAINTY 6

4.1. MEASURING INSTRUMENT CALIBRATION 6

4.2. SAMPLE CALCULATION 6

4.3. MEASUREMENT UNCERTAINTY 6

4.4. DECISION RULE 6

5. EQUIPMENT UNDER TEST 7

5.1. DESCRIPTION OF EUT 7

5.2. MAXIMUM E-FIELD STRENGTH 7

5.3. WORST-CASE CONFIGURATION AND MODE 7

5.4. DESCRIPTION OF TEST SETUP 8

6. TEST AND MEASUREMENT EQUIPMENT 10

7. 20dB BANDWIDTH 11

8. RADIATED EMISSION TEST RESULTS 12

8.1. LIMITS AND PROCEDURE 12

8.1.1. FUNDAMENTAL AND SPURIOUS EMISSIONS (0.15 – 30 MHz) 14

8.1.2. SPURIOUS EMISSION 0.009 TO 30 MHz 16

8.1.3. FUNDAMENTAL AND SPURIOUS EMISSIONS (0.15 – 30 MHz) [EUT with passive TAG mode] 18

8.1.4. SPURIOUS EMISSION 0.09 TO 30 MHz [EUT with passive TAG mode] 20

8.1.5. TX SPURIOUS EMISSION 30 TO 1000 MHz 22

9. AC MAINS LINE CONDUCTED EMISSIONS 24

10. FREQUENCY STABILITY 27

UL Korea, Ltd. Suwon Laboratory FORM ID: FCC_15C(04)
218 Maeyeong-ro, Yeongtong-gu, Suwon-si, Gyeonggi-do, 16675, Korea TEL: (031) 337-9902 FAX: (031) 213-5433

UL Korea, Ltd. Confidential
This report shall not be reproduced except in full, without the written approval of UL Korea, Ltd.

1. ATTESTATION OF TEST RESULTS

COMPANY NAME:	SAMSUNG ELECTRONICS CO., LTD.
EUT DESCRIPTION:	GSM/WCDMA/LTE Phone + BT/BLE, DTS/UNII a/b/g/n/ac, ANT+ and NFC
MODEL NUMBER:	SC-54A, SCG07
SERIAL NUMBER:	R3CN709MWJE (RADIATED);
DATE TESTED:	AUG 20, 2020 – AUG 24, 2020;

APPLICABLE STANDARDS	
STANDARD	**TEST RESULTS**
CFR 47 Part 15 Subpart C	Pass

UL Korea, Ltd. tested the above equipment in accordance with the requirements set forth in the above standards. All indications of Pass/Fail in this report are opinions expressed by UL Korea, Ltd. based on interpretations and/or observations of test results. Measurement Uncertainties were not taken into account and are published for informational purposes only. The test results show that the equipment tested is capable of demonstrating compliance with the requirements as documented in this report.

Note: The results documented in this report apply only to the tested sample, under the conditions and modes of operation as described herein. This document may not be altered or revised in any way unless done so by UL Korea, Ltd. and all revisions are duly noted in the revisions section. Any alteration of this document not carried out by UL Korea, Ltd. will constitute fraud and shall nullify the document. This report must not be used by the client to claim product certification, approval, or endorsement by IAS, any agency of the Federal Government, or any agency of any government.

Approved & Released For
UL Korea, Ltd. By:

Junwhan Lee
Suwon Lab Engineer
UL Korea, Ltd.

Tested By:

Sungeun Lee
Suwon Lab Engineer
UL Korea, Ltd.

UL Korea, Ltd. Confidential
This report shall not be reproduced except in full, without the written approval of UL Korea, Ltd.

2. TEST METHODOLOGY

The tests documented in this report were performed in accordance with following methods.

1. FCC CFR 47 Part 2.
2. FCC CFR 47 Part 15.
3. ANSI C63.10-2013.
4. 414788 D01 Radiated Test Site v01r01

3. FACILITIES AND ACCREDITATION

The test sites and measurement facilities used to collect data are located at 218 Maeyeong-ro, Yeongtong-gu, Suwon-si, Gyeonggi-do, 16675, Korea. Line conducted emissions are measured only at the 218 address. The following table identifies which facilities were utilized for radiated emission measurements documented in this report. Specific facilities are also identified in the test results sections.

218 Maeyeong-ro
☐ Chamber 1
☒ Chamber 2
☐ Chamber 3

UL Korea, Ltd. is accredited by IAS, Laboratory Code TL-637. The full scope of accreditation can be viewed at https://www.iasonline.org/wp-content/uploads/2017/05/TL-637-cert-New.pdf.

UL Korea, Ltd. Confidential
This report shall not be reproduced except in full, without the written approval of UL Korea, Ltd.

4. CALIBRATION AND UNCERTAINTY

4.1. MEASURING INSTRUMENT CALIBRATION

The measuring equipment utilized to perform the tests documented in this report has been calibrated in accordance with the manufacturer's recommendations, and is traceable to recognized national standards.

4.2. SAMPLE CALCULATION

Where relevant, the following sample calculation is provided:

Field Strength (dBuV/m) = Measured Voltage (dBuV) + Antenna Factor (dB/m) + Cable Loss (dB) – Preamp Gain (dB)
36.5 dBuV + 18.7 dB/m + 0.6 dB – 26.9 dB = 28.9 dBuV/m

4.3. MEASUREMENT UNCERTAINTY

Where relevant, the following measurement uncertainty levels have been estimated for tests performed on the apparatus:

PARAMETER	UNCERTAINTY
Conducted Disturbance, 0.15 to 30 MHz	2.35 dB
Radiated Disturbance, 9 kHz to 30 MHz	1.72 dB
Radiated Disturbance, 30 MHz to 1 GHz	3.49 dB

Uncertainty figures are valid to a confidence level of 95%.

4.4. DECISION RULE

Decision rule for statement(s) of conformity is based on Procedure 1, Clause 4.4.2 in IEC Guide 115:2007.

UL Korea, Ltd. Suwon Laboratory FORM ID: FCC_15C(04)
218 Maeyeong-ro, Yeongtong-gu, Suwon-si, Gyeonggi-do, 16675, Korea TEL: (031) 337-9902 FAX: (031) 213-5433
UL Korea, Ltd. Confidential
This report shall not be reproduced except in full, without the written approval of UL Korea, Ltd.

5. EQUIPMENT UNDER TEST

5.1. DESCRIPTION OF EUT

The EUT is a GSM/WCDMA/LTE Phone + BT/BLE, DTS/UNII a/b/g/n/ac, ANT+ and NFC.
This test report addresses the DTS (BLE) operational mode.

This report covers the Samsung models SC-54A and SCG07.
These models are identical in hardware. Basic model SC-54A was set for test.
(see the PED document for details).

5.2. MAXIMUM E-FIELD STRENGTH

The testing was performed at 3 meter. The transmitter maximum E-field at 30m distance is 18.46 dBuV/m which convert from 3 meter data.

5.3. WORST-CASE CONFIGURATION AND MODE

The NFC function was tested at its' fundamental and only operational frequency of 13.56 MHz.

The fundamental of the EUT was investigated in three orthogonal orientations X, Y and Z. It was determined that the Y orientation was the worst-case orientation; therefore all final radiated testing was performed with the EUT in the Y orientation while generating continuous emissions.

The fundamental level of the EUT was investigated each type and bitrate.
All test was performed worst case condition(type A and bit rate 106 kbps).

Radiated(fundamental level and spurious emissions) tests were performed both without reading a passive tag condition[test mode] and with reading a passive tag condition.

UL Korea, Ltd. Suwon Laboratory FORM ID: FCC_15C(04)
218 Maeyeong-ro, Yeongtong-gu, Suwon-si, Gyeonggi-do, 16675, Korea TEL: (031) 337-9902 FAX: (031) 213-5433
UL Korea, Ltd. Confidential
This report shall not be reproduced except in full, without the written approval of UL Korea, Ltd.

5.4. DESCRIPTION OF TEST SETUP

SUPPORT EQUIPMENT

Support Equipment List				
Description	**Manufacturer**	**Model**	**Serial Number**	**FCC ID**
Charger	SAMSUNG	EP-TA200	R37MEFL0WRDK3	N/A
Data Cable	SAMSUNG	EP-DR140ABE	N/A	N/A
Earphone	SAMSUNG	N/A	N/A	N/A

I/O CABLE

I/O Cable List						
Cable No.	**Port**	**# of identical ports**	**Connector Type**	**Cable Type**	**Cable Length(m)**	**Remarks**
1	DC Power	1	C Type	Shielded	1.1m	N/A

The EUT is a stand-alone device configured and tested in a worst-case setup.

Note: Worst case is using worst case orientation with AC charger attached to the EUT with NFC signal continuously transmitting.

SETUP DIAGRAM FOR TESTS _AC Line Conducted

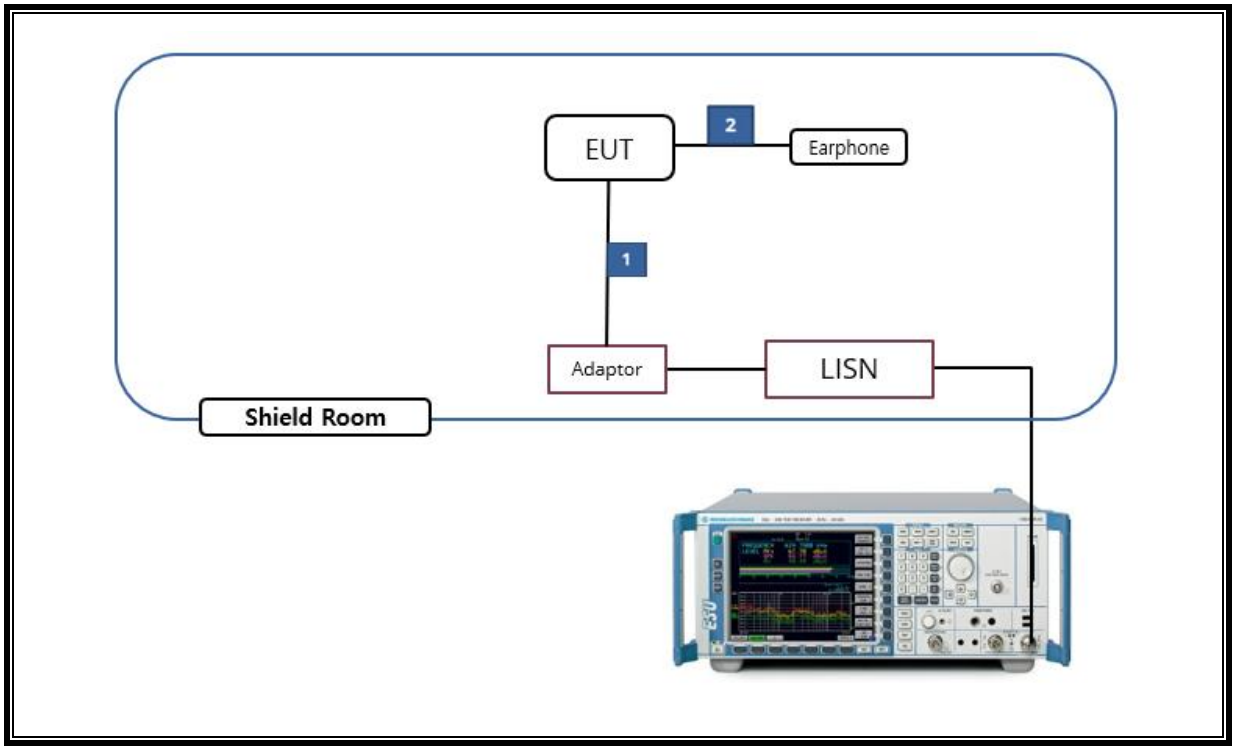

UL Korea, Ltd. Confidential
This report shall not be reproduced except in full, without the written approval of UL Korea, Ltd.

SETUP DIAGRAM FOR TESTS (RADIATED TEST SETUP)_Below 30MHz

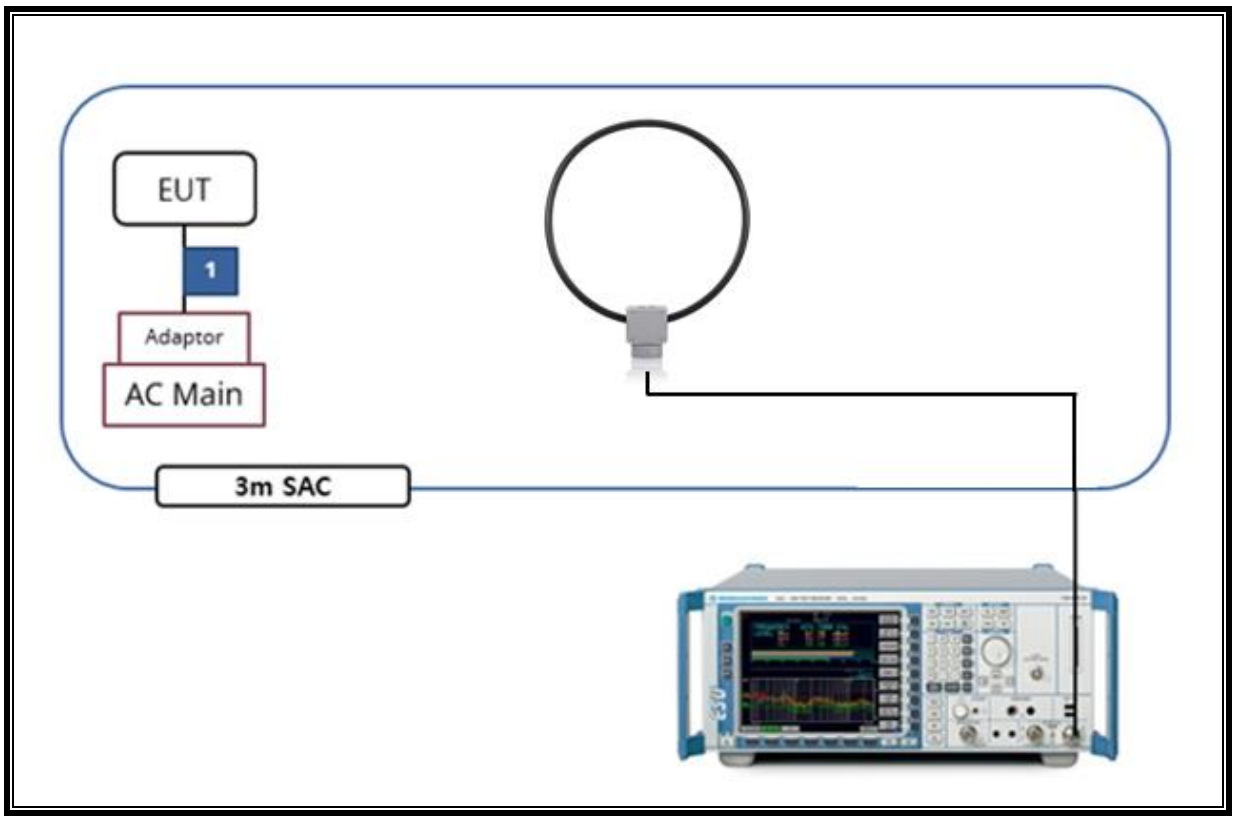

SETUP DIAGRAM FOR TESTS (RADIATED TEST SETUP)_30 – 1000MHz

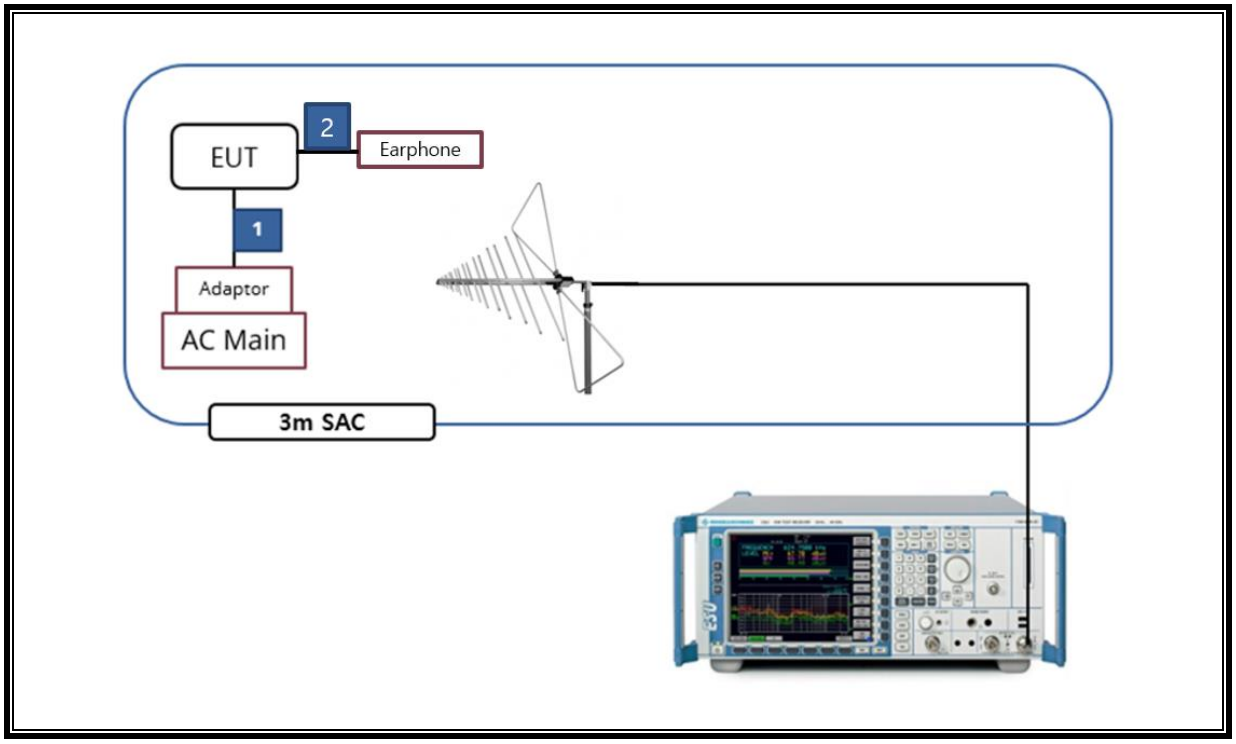

UL Korea, Ltd. Confidential
This report shall not be reproduced except in full, without the written approval of UL Korea, Ltd.

6. TEST AND MEASUREMENT EQUIPMENT

The following test and measurement equipment was utilized for the tests documented in this report:

Test Equipment List					
Description	**Manufacturer**	**Model**	**S/N**	**Next Cal. Date**	
Antenna, Bilog, 30MHz-1GHz	SCHWARZBECK	VULB9163	845(Note)	08-04-20	08-13-22
Antenna, Bilog, 30MHz-1GHz	SCHWARZBECK	VULB9163	749(Note)	08-04-20	08-13-22
Preamplifier, 1000 MHz	Sonoma	310N	341282	08-05-20	08-03-21
Preamplifier, 1000 MHz	Sonoma	310N	351741	08-05-20	08-03-21
Spectrum Analyzer, 7 GHz	Agilent / HP	N9010A	MY54200580	08-07-20	08-05-21
EMI Test Receive, 3 GHz	R&S	ESR3	101832	08-05-20	08-03-21
DC Power Supply	Agilent / HP	E3640A	MY54226395	08-06-20	08-05-21
Temperature Chamber	ESPEC	SH-642	93001109	08-05-20	08-04-21
LISN	R&S	ENV216	101837	08-09-20	08-06-21
Antenna, Loop, 9kHz-30MHz	R&S	HFH2-Z2	100418	10-02-21	
UL Software					
Description	**Manufacturer**	**Model**	**Version**		
Radiated software	UL	UL EMC	Ver 9.5		
AC Line Conducted software	UL	UL EMC	Ver 9.5		

Note. The above antenna was not used for testing from August 4th to August 13th.

UL Korea, Ltd. Suwon Laboratory FORM ID: FCC_15C(04)
218 Maeyeong-ro, Yeongtong-gu, Suwon-si, Gyeonggi-do, 16675, Korea TEL: (031) 337-9902 FAX: (031) 213-5433
UL Korea, Ltd. Confidential
This report shall not be reproduced except in full, without the written approval of UL Korea, Ltd.

7. 20dB BANDWIDTH

LIMITS

§15.215

(c) Intentional radiators operating under the alternative provisions to the general emission limits, as contained in §§15.217 through 15.257 and in subpart E of this part, must be designed to ensure that the 20 dB bandwidth of the emission, or whatever bandwidth may otherwise be specified in the specific rule section under which the equipment operates, is contained within the frequency band designated in the rule section under which the equipment is operated

§15.225

Operation within the band 13.110 – 14.010MHz

TEST PROCEDURE

The spectrum analyzer connected receive antenna and the EUT placed on near the receive antenna. The RBW is set to 10KHz. The VBW is set to 3 times the RBW. The sweep time is coupled.

RESULTS

Frequency [MHz]	20 dB Bandwidth [kHz]
13.56	437.35

20dB Bandwidth Plot

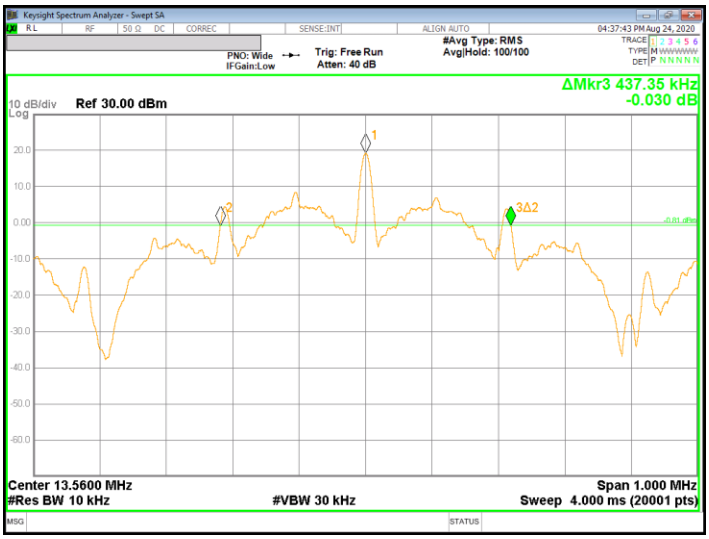

UL Korea, Ltd. Suwon Laboratory FORM ID: FCC_15C(04)
218 Maeyeong-ro, Yeongtong-gu, Suwon-si, Gyeonggi-do, 16675, Korea TEL: (031) 337-9902 FAX: (031) 213-5433
UL Korea, Ltd. Confidential
This report shall not be reproduced except in full, without the written approval of UL Korea, Ltd.

8. RADIATED EMISSION TEST RESULTS

8.1. LIMITS AND PROCEDURE

LIMIT

§15.225

(a) The field strength of any emissions within the band 13.553–13.567 MHz shall not exceed 15,848 microvolts/ meter at 30 meters.

(b) Within the bands 13.410–13.553 MHz and 13.567–13.710 MHz, the field strength of any emissions shall not exceed 334 microvolts/meter at 30 meters.

(c) Within the bands 13.110–13.410 MHz and 13.710–14.010 MHz the field strength of any emissions shall not exceed 106 microvolts/meter at 30 meters.

(d) The field strength of any emissions appearing outside of the 13.110– 14.010 MHz and shall not exceed the general radiated emission limits in § 15.209 as follows:
§15.209 (a) Except as provided elsewhere in this subpart, the emissions from an intentional radiator shall not exceed the field strength levels specified in the following table:

Limits for radiated disturbance of an intentional radiator		
Frequency range (MHz)	Limits (µV/m)	Measurement Distance (m)
0.009 – 0.490	2400 / F (kHz)	300
0.490 – 1.705	24000 / F (kHz)	30
1.705 – 30.0	30	30
30 – 88	100**	3
88 - 216	150**	3
216 – 960	200**	3
Above 960	500	3

** Except as provided in paragraph (g), fundamental emissions from intentional radiators operating under this section shall not be located in the frequency bands 54-72 MHz, 76-88 MHz, 174-216 MHz or 470-806 MHz. However, operation within these frequency bands is permitted under other sections of this part, e.g. §§ 15.231 and 15.241.
§15.209 (b) In the emission table above, the tighter limit applies at the band edges.

Formula for converting the filed strength from uV/m to dBuV/m is:
Limit (dBuV/m) = 20 log limit (uV/m)

UL Korea, Ltd. Suwon Laboratory FORM ID: FCC_15C(04)
218 Maeyeong-ro, Yeongtong-gu, Suwon-si, Gyeonggi-do, 16675, Korea TEL: (031) 337-9902 FAX: (031) 213-5433
UL Korea, Ltd. Confidential
This report shall not be reproduced except in full, without the written approval of UL Korea, Ltd.

In addition:

§15.209 (d) The emission limits shown the above table are based on measurements employing a CISPR quasi-peak detector except for the frequency bands 9-90 kHz, 110-490 kHz and above 1000 MHz. Radiated emissions limits in these three bands are based on measurements employing an average detector.

§15.209 (d) The provisions in §§ 15.225, measuring emissions at distances other than the distances specified in the above table, determining the frequency range over which radiated emissions are to be measured, and limiting peak emissions apply to all devices operated under this part.

TEST PROCEDURE

ANSI C63.10-2013

The EUT is an intentional radiator that incorporates a digital device. The highest fundamental frequency generated or used in the device is 13.56 MHz. The frequency range was investigated from 0.15 MHz to the 10th harmonic of the highest fundamental frequency, or 1000 MHz, whichever is greater (1000MHz)

RESULTS

No non-compliance noted:

UL Korea, Ltd. Suwon Laboratory FORM ID: FCC_15C(04)
218 Maeyeong-ro, Yeongtong-gu, Suwon-si, Gyeonggi-do, 16675, Korea TEL: (031) 337-9902 FAX: (031) 213-5433
UL Korea, Ltd. Confidential
This report shall not be reproduced except in full, without the written approval of UL Korea, Ltd.

8.1.1. FUNDAMENTAL AND SPURIOUS EMISSIONS (0.15 – 30 MHz) [EUT without passive TAG mode]

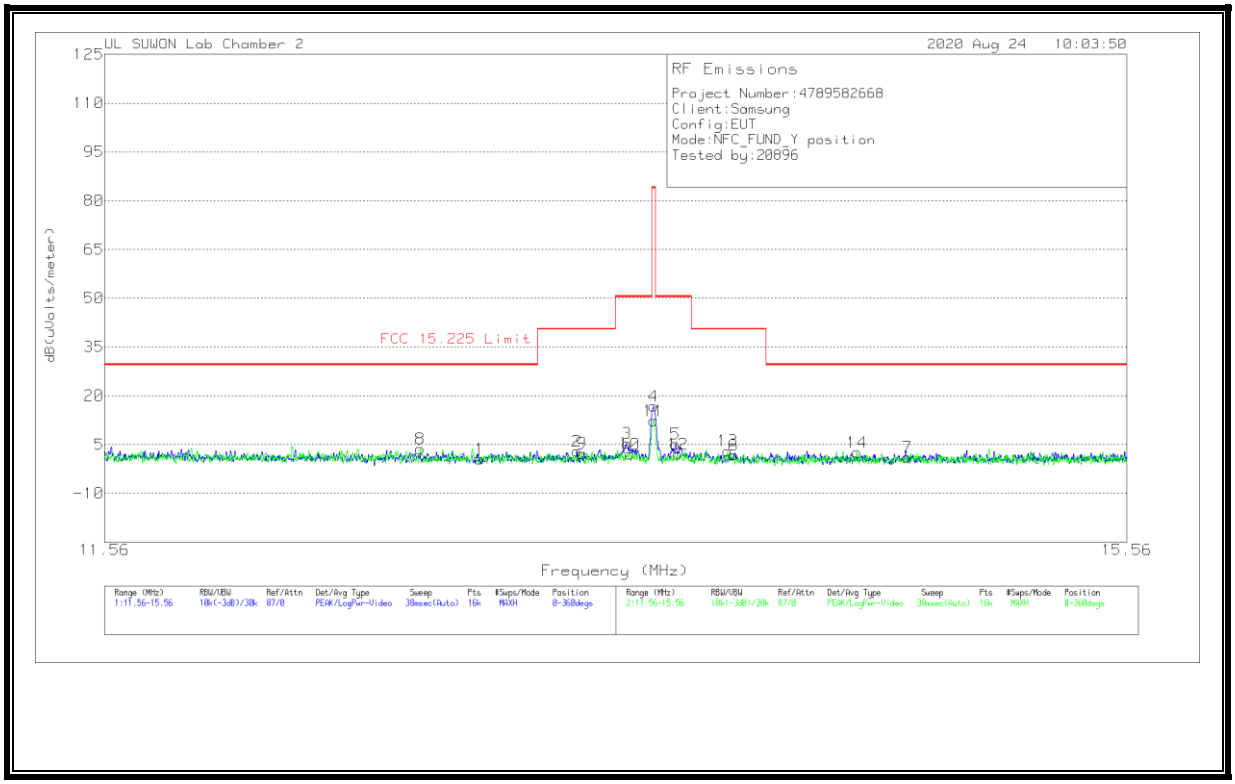

UL Korea, Ltd. Suwon Laboratory FORM ID: FCC_15C(04)
218 Maeyeong-ro, Yeongtong-gu, Suwon-si, Gyeonggi-do, 16675, Korea TEL: (031) 337-9902 FAX: (031) 213-5433
UL Korea, Ltd. Confidential
This report shall not be reproduced except in full, without the written approval of UL Korea, Ltd.

Trace Markers

[Face On]

Marker	Frequency (MHz)	Meter Reading (dBuV)	Det	HFH2-Z2_Loop Antenna	Dist Corr 30m	Cable Loss	Corrected Reading dB(uVolts/meter)	FCC 15.225 Limit	Margin (dB)	Azimuth (Degs)
1	12.8935	19.96	Pk	20	-40	.5	.46	29.54	-29.08	0-360
2	13.26138	22.55	Pk	20	-40	.5	3.05	40.51	-37.46	0-360
3	13.45438	24.84	Pk	20	-40	.5	5.34	50.5	-45.16	0-360
**4	13.56	36.39	Pk	20	-40	.5	16.89	84	-67.11	0-360
5	13.64763	24.6	Pk	20	-40	.6	5.2	50.5	-45.3	0-360
6	13.88088	21.29	Pk	20	-40	.6	1.89	40.51	-38.62	0-360
7	14.5995	20.57	Pk	20	-40	.6	1.17	29.54	-28.37	0-360

[Face Off]

Marker	Frequency (MHz)	Meter Reading (dBuV)	Det	HFH2-Z2_Loop Antenna	Dist Corr 30m	Cable Loss	Corrected Reading dB(uVolts/meter)	FCC 15.225 Limit	Margin (dB)	Azimuth (Degs)
8	12.67238	23.19	Pk	20	-40	.5	3.69	29.54	-25.85	0-360
9	13.27975	21.82	Pk	20	-40	.5	2.32	40.51	-38.19	0-360
10	13.46825	21.55	Pk	20	-40	.5	2.05	50.5	-48.45	0-360
**11	13.56	31.77	Pk	20	-40	.5	12.27	84	-71.73	0-360
12	13.6555	21.51	Pk	20	-40	.6	2.11	50.5	-48.39	0-360
13	13.85588	22.47	Pk	20	-40	.6	3.07	40.51	-37.44	0-360
14	14.38613	21.92	Pk	20	-40	.6	2.52	29.54	-27.02	0-360

Pk - Peak detector

** Fundamental

Note 1 : Although these tests were performed other than open filed test site, adequate comparison measurements were confirmed against 30 m open are test site.
Therefore sufficient tests were made to demonstrate that the alternative site produces results that correlate with the ones of tests made in an open field based on KDB 414788.

Note 2: Radiated test were investigated with three receiving antenna axes: Face-on, Face-off and horizontal (parallel to the ground plane) and the worse orientations of Face-on and Face-off were set for final test.

UL Korea, Ltd. Suwon Laboratory FORM ID: FCC_15C(04)
218 Maeyeong-ro, Yeongtong-gu, Suwon-si, Gyeonggi-do, 16675, Korea TEL: (031) 337-9902 FAX: (031) 213-5433
UL Korea, Ltd. Confidential
This report shall not be reproduced except in full, without the written approval of UL Korea, Ltd.

8.1.2. SPURIOUS EMISSION 0.009 TO 30 MHz[EUT without passive TAG mode]

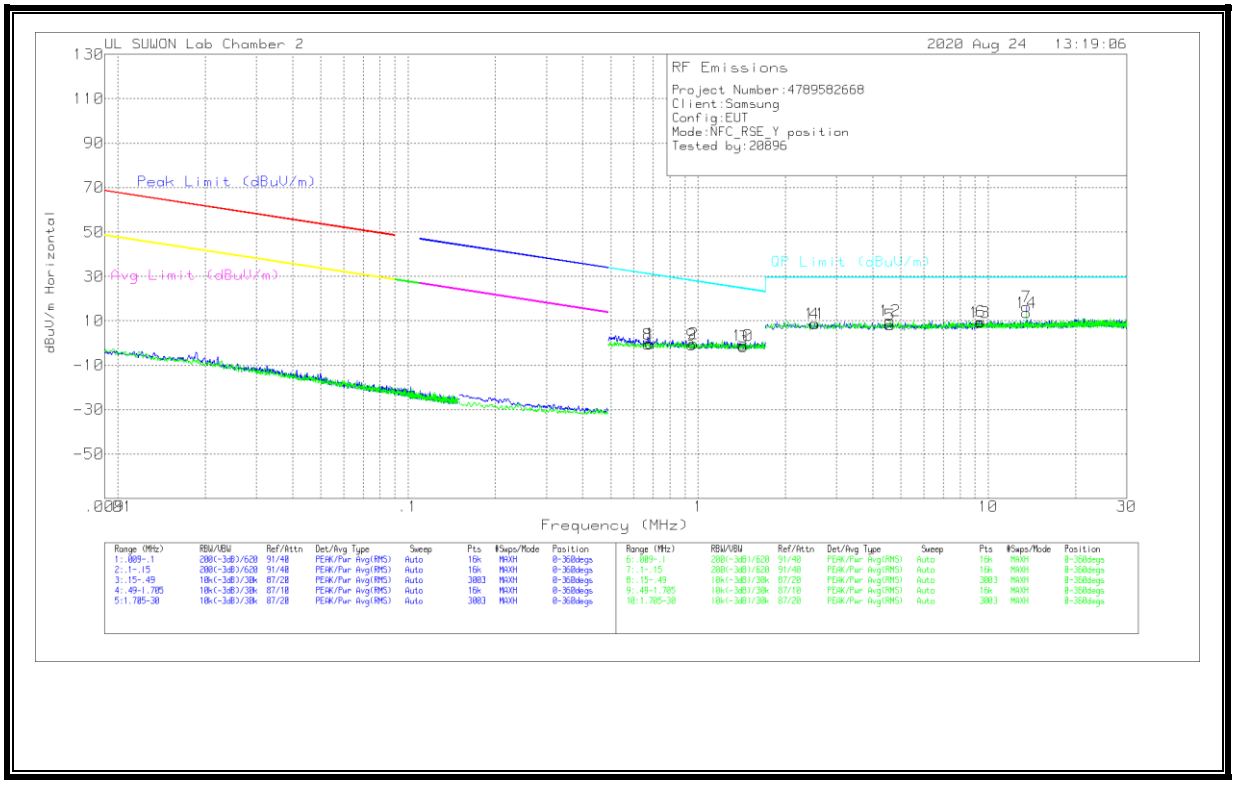

Range (MHz)	RBW/VBW	Ref/Attn	Det/Avg Type	Sweep	Pts	#Swps/Mode	Position
1:.009-.1	200(-3dB)/620	91/40	PEAK/Pwr Avg(RMS)	Auto	16k	MAXH	0-360degs
2:.1-.15	200(-3dB)/620	91/40	PEAK/Pwr Avg(RMS)	Auto	16k	MAXH	0-360degs
3:.15-.49	10k(-3dB)/30k	87/20	PEAK/Pwr Avg(RMS)	Auto	3003	MAXH	0-360degs
4:.49-1.705	10k(-3dB)/30k	87/10	PEAK/Pwr Avg(RMS)	Auto	16k	MAXH	0-360degs
5:1.705-30	10k(-3dB)/30k	87/20	PEAK/Pwr Avg(RMS)	Auto	3003	MAXH	0-360degs

Range (MHz)	RBW/VBW	Ref/Attn	Det/Avg Type	Sweep	Pts	#Swps/Mode	Position
6:.009-.1	200(-3dB)/620	91/40	PEAK/Pwr Avg(RMS)	Auto	16k	MAXH	0-360degs
7:.1-.15	200(-3dB)/620	91/40	PEAK/Pwr Avg(RMS)	Auto	16k	MAXH	0-360degs
8:.15-.49	10k(-3dB)/30k	87/20	PEAK/Pwr Avg(RMS)	Auto	3003	MAXH	0-360degs
9:.49-1.705	10k(-3dB)/30k	87/10	PEAK/Pwr Avg(RMS)	Auto	16k	MAXH	0-360degs
10:1.705-30	10k(-3dB)/30k	87/20	PEAK/Pwr Avg(RMS)	Auto	3003	MAXH	0-360degs

UL Korea, Ltd. Suwon Laboratory FORM ID: FCC_15C(04)
218 Maeyeong-ro, Yeongtong-gu, Suwon-si, Gyeonggi-do, 16675, Korea TEL: (031) 337-9902 FAX: (031) 213-5433
UL Korea, Ltd. Confidential
This report shall not be reproduced except in full, without the written approval of UL Korea, Ltd.

Trace Markers

[Face On]

Marker	Frequency (MHz)	Meter Reading (dBuV)	Det	HFH2-Z2_Loop Antenna	Cable Loss	Dist Corr 30m	Corrected Reading dBuV/m	QP Limit (dBuV/m)	Margin (dB)	Azimuth (Degs)
1	.68589	19.85	Pk	19.7	.1	-40	-.35	30.89	-31.24	0-360
2	.96394	19.69	Pk	19.8	.2	-40	-.31	27.94	-28.25	0-360
3	1.43172	18.38	Pk	19.8	.2	-40	-1.62	24.51	-26.13	0-360
4	2.51555	28.55	Pk	19.9	.3	-40	8.75	29.5	-20.75	0-360
5	4.58905	28.17	Pk	19.8	.3	-40	8.27	29.5	-21.23	0-360
6	9.42879	29.2	Pk	20	.5	-40	9.7	29.5	-19.8	0-360
**7	13.56165	35.87	Pk	20	.5	-40	16.37	29.5	-13.13	0-360

[Face Off]

Marker	Frequency (MHz)	Meter Reading (dBuV)	Det	HFH2-Z2_Loop Antenna	Cable Loss	Dist Corr 30m	Corrected Reading dBuV/m	QP Limit (dBuV/m)	Margin (dB)	Azimuth (Degs)
8	.67274	19.75	Pk	19.7	.1	-40	-.45	31.05	-31.5	0-360
9	.95003	19.17	Pk	19.8	.2	-40	-.83	28.07	-28.9	0-360
10	1.42484	19	Pk	19.8	.2	-40	-1	24.55	-25.55	0-360
11	2.5344	28.48	Pk	19.9	.3	-40	8.68	29.5	-20.82	0-360
12	4.58905	29.88	Pk	19.8	.3	-40	9.98	29.5	-19.52	0-360
13	9.3581	28.78	Pk	20	.5	-40	9.28	29.5	-20.22	0-360
**14	13.56165	33.2	Pk	20	.5	-40	13.7	29.5	-15.8	0-360

Pk - Peak detector

** Fundamental

Note 1: The data for marker number 7 and 14 are the fundamental signal.
Please refer to section 8.1.1 about the fundamental level.
Frequency range 0.009MHz ~ 0.490MHz, only noise floor level and more than 20dB margin.

Note 2: Radiated test were investigated with three receiving antenna axes: Face-on, Face-off and horizontal (parallel to the ground plane) and the worse orientations of Face-on and Face-off were set for final test.

UL Korea, Ltd. Confidential
This report shall not be reproduced except in full, without the written approval of UL Korea, Ltd.

8.1.3. FUNDAMENTAL AND SPURIOUS EMISSIONS (0.15 – 30 MHz) [EUT with passive TAG mode]

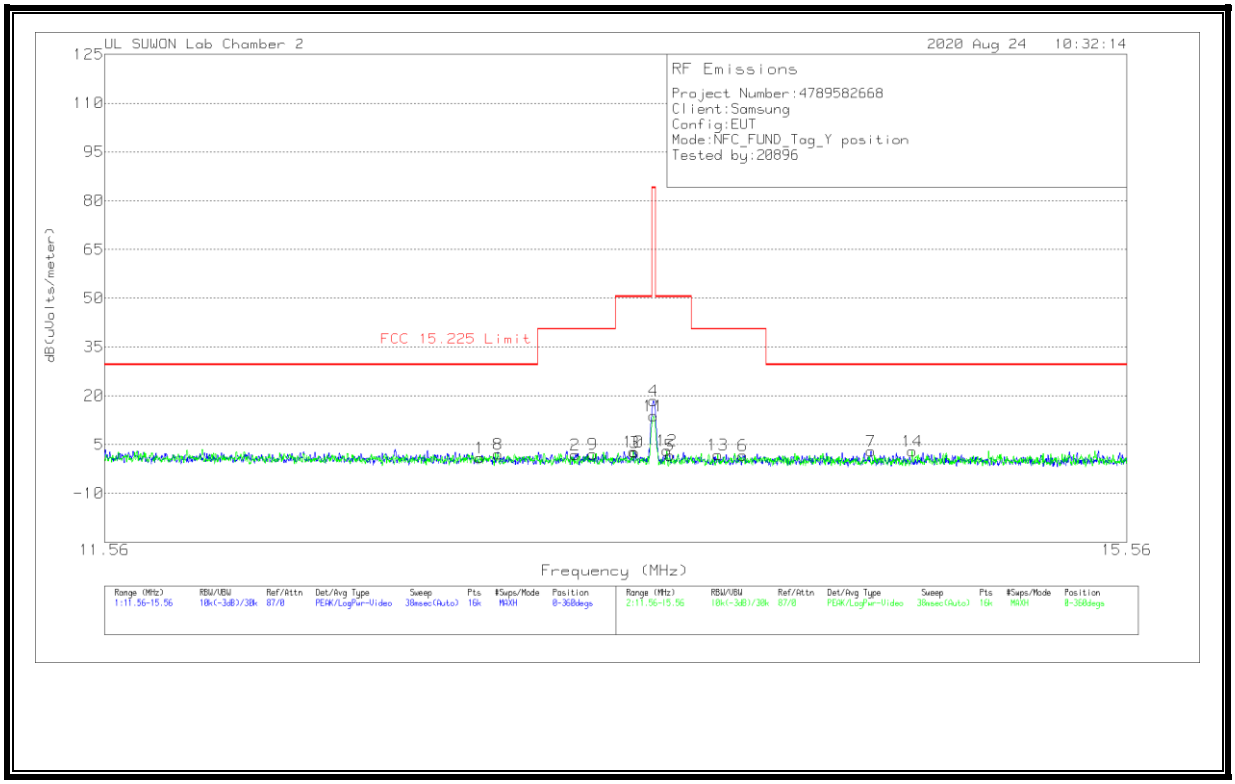

UL Korea, Ltd. Suwon Laboratory FORM ID: FCC_15C(04)
218 Maeyeong-ro, Yeongtong-gu, Suwon-si, Gyeonggi-do, 16675, Korea TEL: (031) 337-9902 FAX: (031) 213-5433
UL Korea, Ltd. Confidential
This report shall not be reproduced except in full, without the written approval of UL Korea, Ltd.

Trace Markers
[Face On]

Marker	Frequency (MHz)	Meter Reading (dBuV)	Det	HFH2-Z2_Loop Antenna	Dist Corr 30m	Cable Loss	Corrected Reading dB(uVolts/meter)	FCC 15.225 Limit	Margin (dB)	Azimuth (Degs)
1	12.89175	20.39	Pk	20	-40	.5	.89	29.54	-28.65	0-360
2	13.25575	21.39	Pk	20	-40	.5	1.89	40.51	-38.62	0-360
3	13.48563	22.18	Pk	20	-40	.5	2.68	50.5	-47.82	0-360
**4	13.56025	37.96	Pk	20	-40	.5	18.46	84	-65.54	0-360
5	13.62413	21.04	Pk	20	-40	.6	1.64	50.5	-48.86	0-360
6	13.91713	21.04	Pk	20	-40	.6	1.64	40.51	-38.87	0-360
7	14.44513	22.4	Pk	20	-40	.6	3	29.54	-26.54	0-360

[Face Off]

Marker	Frequency (MHz)	Meter Reading (dBuV)	Det	HFH2-Z2_Loop Antenna	Dist Corr 30m	Cable Loss	Corrected Reading dB(uVolts/meter)	FCC 15.225 Limit	Margin (dB)	Azimuth (Degs)
8	12.96	21.51	Pk	20	-40	.5	2.01	29.54	-27.53	0-360
9	13.32388	21.59	Pk	20	-40	.5	2.09	40.51	-38.42	0-360
10	13.48088	22.37	Pk	20	-40	.5	2.87	50.5	-47.63	0-360
**11	13.56	33.27	Pk	20	-40	.5	13.77	84	-70.23	0-360
12	13.61288	22.57	Pk	20	-40	.6	3.17	50.5	-47.33	0-360
13	13.81538	21.31	Pk	20	-40	.6	1.91	40.51	-38.6	0-360
14	14.61888	22.39	Pk	20	-40	.6	2.99	29.54	-26.55	0-360

Pk - Peak detector
** Fundamental

Note 1: Although these tests were performed other than open filed test site, adequate comparison measurements were confirmed against 30 m open are test site.
Therefore sufficient tests were made to demonstrate that the alternative site produces results that correlate with the ones of tests made in an open field based on KDB 414788.

Note 2: Radiated test were investigated with three receiving antenna axes: Face-on, Face-off and horizontal (parallel to the ground plane) and the worse orientations of Face-on and Face-off were set for final test.

UL Korea, Ltd. Suwon Laboratory FORM ID: FCC_15C(04)
218 Maeyeong-ro, Yeongtong-gu, Suwon-si, Gyeonggi-do, 16675, Korea TEL: (031) 337-9902 FAX: (031) 213-5433
UL Korea, Ltd. Confidential
This report shall not be reproduced except in full, without the written approval of UL Korea, Ltd.

8.1.4. SPURIOUS EMISSION 0.09 TO 30 MHz [EUT with passive TAG mode]

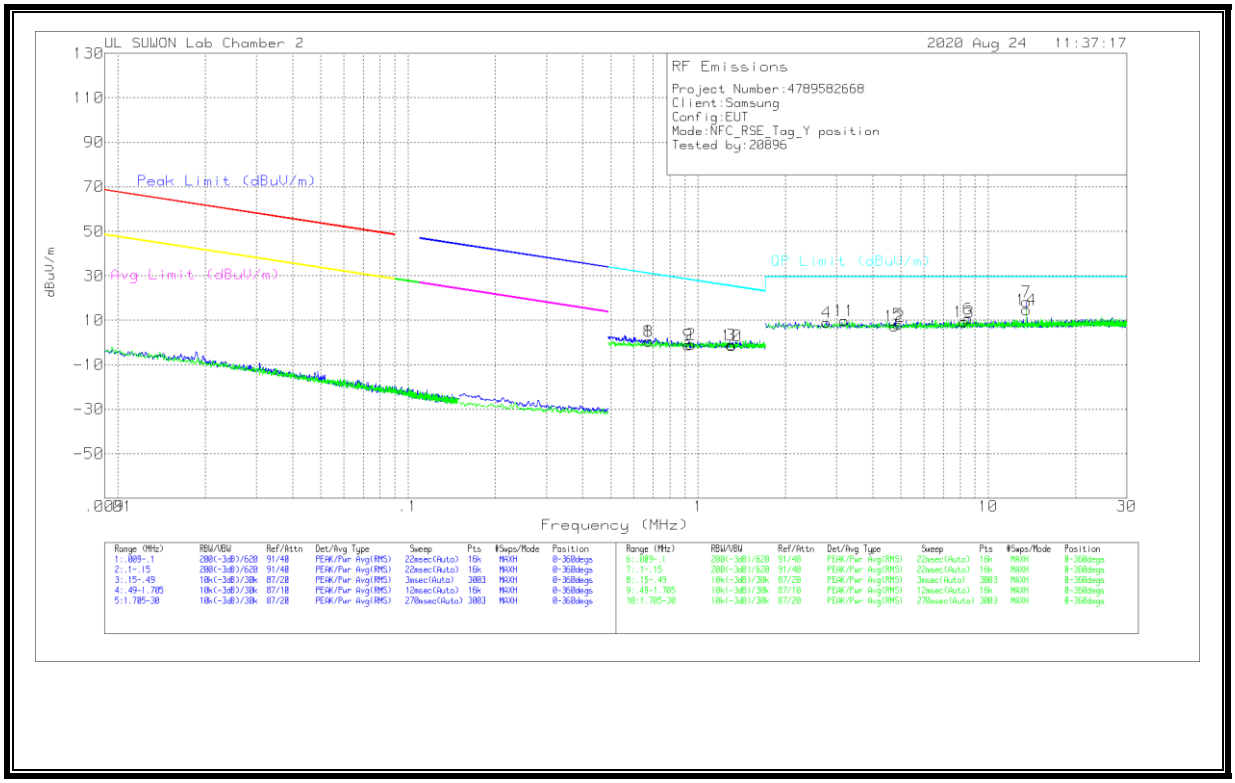

UL Korea, Ltd. Suwon Laboratory FORM ID: FCC_15C(04)
218 Maeyeong-ro, Yeongtong-gu, Suwon-si, Gyeonggi-do, 16675, Korea TEL: (031) 337-9902 FAX: (031) 213-5433
UL Korea, Ltd. Confidential
This report shall not be reproduced except in full, without the written approval of UL Korea, Ltd.

Trace Markers

[Face On]

Marker	Frequency (MHz)	Meter Reading (dBuV)	Det	HFH2-Z2_Loop Antenna	Cable Loss	Dist Corr 30m	Corrected Reading dBuV/m	QP Limit (dBuV/m)	Margin (dB)	Azimuth (Degs)
1	.67666	20.74	Pk	19.7	.1	-40	.54	31	-30.46	0-360
2	.94596	19.07	Pk	19.8	.2	-40	-.93	28.1	-29.03	0-360
3	1.30229	18.94	Pk	19.8	.2	-40	-1.06	25.33	-26.39	0-360
4	2.77003	28.85	Pk	19.9	.3	-40	9.05	29.5	-20.45	0-360
5	4.89065	28.06	Pk	19.8	.3	-40	8.16	29.5	-21.34	0-360
6	8.53813	30.25	Pk	19.9	.4	-40	10.55	29.5	-18.95	0-360
**7	13.56165	37.78	Pk	20	.5	-40	18.28	29.5	-11.22	0-360

[Face Off]

Marker	Frequency (MHz)	Meter Reading (dBuV)	Det	HFH2-Z2_Loop Antenna	Cable Loss	Dist Corr 30m	Corrected Reading dBuV/m	QP Limit (dBuV/m)	Margin (dB)	Azimuth (Degs)
8	.67624	20.77	Pk	19.7	.1	-40	.57	31.01	-30.44	0-360
9	.92514	18.96	Pk	19.8	.2	-40	-1.04	28.3	-29.34	0-360
10	1.30632	18.67	Pk	19.8	.2	-40	-1.33	25.31	-26.64	0-360
11	3.18473	29.7	Pk	19.9	.3	-40	9.9	29.5	-19.6	0-360
12	4.74928	27.25	Pk	19.8	.3	-40	7.35	29.5	-22.15	0-360
13	8.25538	28.88	Pk	19.9	.4	-40	9.18	29.5	-20.32	0-360
**14	13.56165	34.35	Pk	20	.5	-40	14.85	29.5	-14.65	0-360

Pk - Peak detector

** Fundamental

Note 1: The data for marker number 7 and 14 are the fundamental signal.
Please refer to section 8.1.4 about the fundamental level.
Frequency range 0.009MHz ~ 0.490MHz, only noise floor level and more than 20dB margin.

Note 2: Radiated test were investigated with three receiving antenna axes: Face-on, Face-off and horizontal (parallel to the ground plane) and the worse orientations of Face-on and Face-off were set for final test.

UL Korea, Ltd. Suwon Laboratory FORM ID: FCC_15C(04)
218 Maeyeong-ro, Yeongtong-gu, Suwon-si, Gyeonggi-do, 16675, Korea TEL: (031) 337-9902 FAX: (031) 213-5433
UL Korea, Ltd. Confidential
This report shall not be reproduced except in full, without the written approval of UL Korea, Ltd.

8.1.5. TX SPURIOUS EMISSION 30 TO 1000 MHz

HORIZONTAL(Y axis)

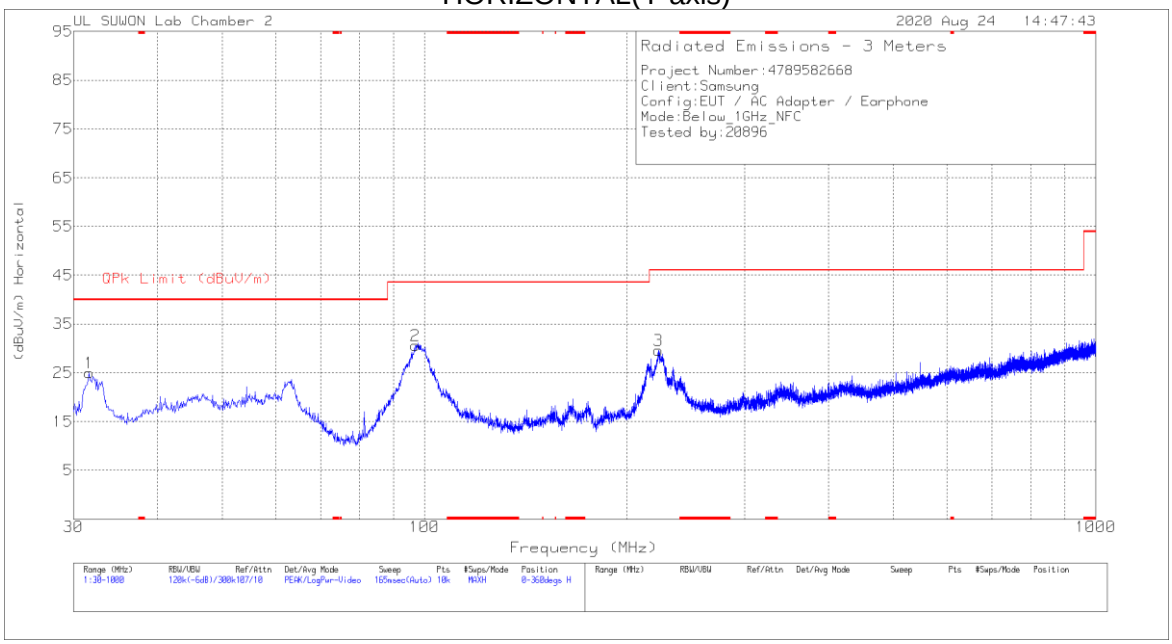

VERTICAL(Y axis)

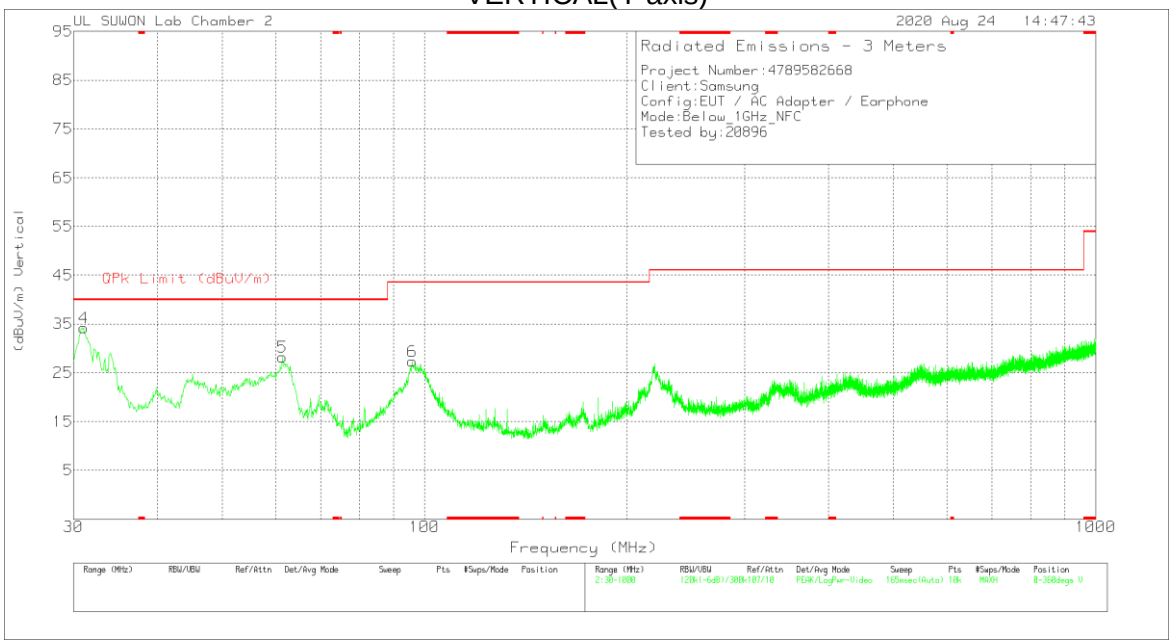

UL Korea, Ltd. Confidential
This report shall not be reproduced except in full, without the written approval of UL Korea, Ltd.

Trace Markers

Marker	Frequency (MHz)	Meter Reading (dBuV)	Det	VULB9163_749	Below_1G[dB]	Corrected Reading (dBuV/m)	QPk Limit (dBuV/m)	Margin (dB)	Azimuth (Degs)	Height (cm)	Polarity
1	31.649	41.53	Pk	15.4	-31.9	25.03	40	-14.97	0-360	300	H
2	97.027	45.04	Pk	17	-31.4	30.64	43.52	-12.88	0-360	200	H
3	223.127	43.05	Pk	17.2	-30.7	29.55	46.02	-16.47	0-360	100	H
4	31.067	50.47	Pk	15.4	-31.6	34.27	40	-5.73	0-360	100	V
5	61.428	41.55	Pk	18.2	-31.5	28.25	40	-11.75	0-360	100	V
6	95.863	41.95	Pk	16.8	-31.4	27.35	43.52	-16.17	0-360	100	V

Pk - Peak detector

UL Korea, Ltd. Suwon Laboratory FORM ID: FCC_15C(04)
218 Maeyeong-ro, Yeongtong-gu, Suwon-si, Gyeonggi-do, 16675, Korea TEL: (031) 337-9902 FAX: (031) 213-5433
UL Korea, Ltd. Confidential
This report shall not be reproduced except in full, without the written approval of UL Korea, Ltd.

9. AC MAINS LINE CONDUCTED EMISSIONS

LIMITS

§15.207

(a) Except as shown in paragraphs (b) and (c) of this section, for an intentional radiator that is designed to be connected to the public utility (AC) power line, the radio frequency voltage that is conducted back onto the AC power line on any frequency or frequencies, within the band 150 kHz to 30 MHz, shall not exceed the limits in the following table, as measured using a 50µH/50 ohms line impedance stabilization network (LISN). Compliance with the provisions of this paragraph shall be based on the measurement of the radio frequency voltage between each power line and ground at the power terminal. The lower limit applies at the band edges.

Frequency range (MHz)	Limits (dBµV)	
	Quasi-peak	Average
0.15 to 0.50	66 to 56	56 to 46
0.50 to 5	56	46
5 to 30	60	50
Notes: 1. The lower limit shall apply at the transition frequencies 2. The limit decreases linearly with the logarithm of the frequency in the range 0.15 MHz to 0.50 MHz.		

TEST PROCEDURE

The EUT is placed on a non-conducting table 40 cm from the vertical ground plane and 80 cm above the horizontal ground plane. The EUT is configured in accordance with ANSI C63.10.

The receiver is set to a resolution bandwidth of 9 kHz. Peak detection is used unless otherwise noted as quasi-peak or average.

Line conducted data is recorded for both NEUTRAL and HOT lines.

RESULTS

No non-compliance noted:

UL Korea, Ltd. Suwon Laboratory FORM ID: FCC_15C(04)
218 Maeyeong-ro, Yeongtong-gu, Suwon-si, Gyeonggi-do, 16675, Korea TEL: (031) 337-9902 FAX: (031) 213-5433
UL Korea, Ltd. Confidential
This report shall not be reproduced except in full, without the written approval of UL Korea, Ltd.

WORST EMISSIONS

LINE 1 PLOT

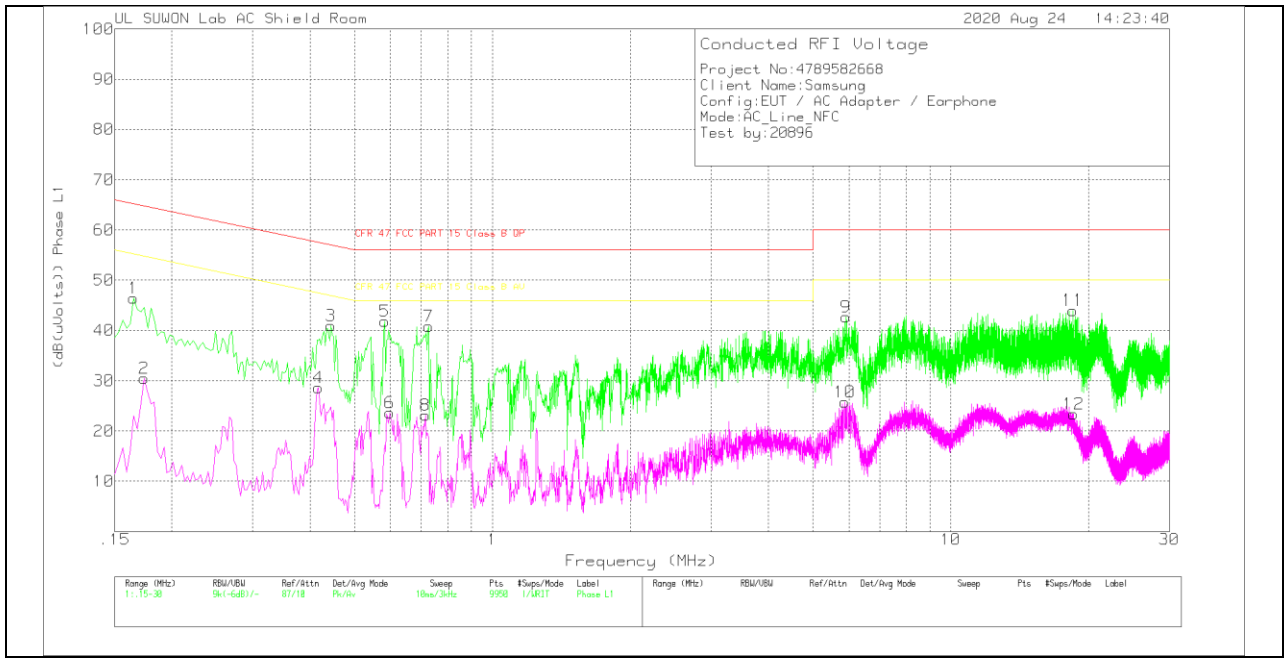

LINE 1 RESULTS

Trace Markers

Range 1: Phase L1 .15 - 30MHz

Marker	Frequency (MHz)	Meter Reading (dBuV)	Det	101836_With EX_L1[dB]	CABLELOSS(dB)	Corrected Reading (dB(uVolts))	CFR 47 FCC PART 15 Class B QP	Margin (dB)	CFR 47 FCC PART 15 Class B AV	Margin (dB)
1	.165	36.37	Pk	10	.1	46.47	65.21	-18.74	-	-
2	.174	20.28	Av	10	.2	30.48	-	-	54.77	-24.29
3	.444	30.83	Pk	9.9	.2	40.93	56.99	-16.06	-	-
4	.417	18.57	Av	9.9	.2	28.67	-	-	47.51	-18.84
5	.582	31.73	Pk	9.9	.2	41.83	56	-14.17	-	-
6	.597	13.57	Av	9.9	.2	23.67	-	-	46	-22.33
7	.726	30.68	Pk	9.9	.2	40.78	56	-15.22	-	-
8	.714	13.07	Av	9.9	.2	23.17	-	-	46	-22.83
9	5.913	32.62	Pk	9.8	.3	42.72	60	-17.28	-	-
10	5.88	15.61	Av	9.8	.3	25.71	-	-	50	-24.29
11	18.483	33.41	Pk	10.2	.4	44.01	60	-15.99	-	-
12	18.507	12.81	Av	10.2	.4	23.41	-	-	50	-26.59

Pk - Peak detector
Av - Average detection

UL Korea, Ltd. Suwon Laboratory FORM ID: FCC_15C(04)
218 Maeyeong-ro, Yeongtong-gu, Suwon-si, Gyeonggi-do, 16675, Korea TEL: (031) 337-9902 FAX: (031) 213-5433
UL Korea, Ltd. Confidential
This report shall not be reproduced except in full, without the written approval of UL Korea, Ltd.

LINE 2 PLOT

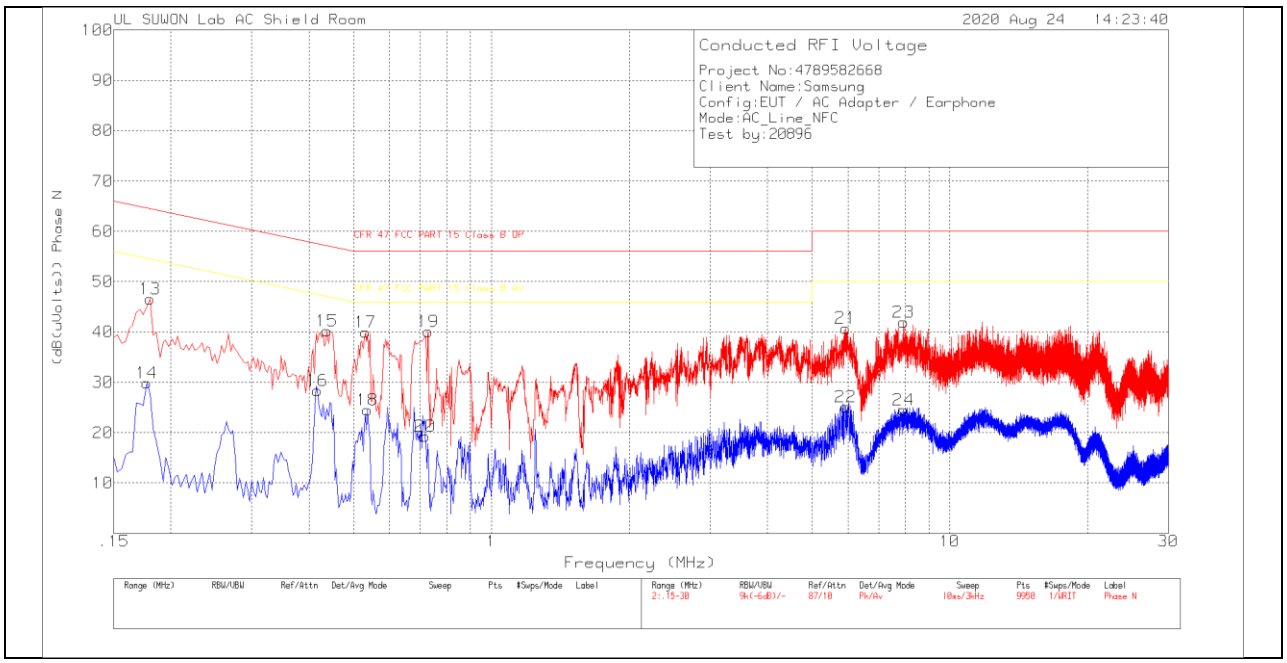

LINE 2 RESULTS

Trace Markers

Range 2: Phase N .15 - 30MHz

Marker	Frequency (MHz)	Meter Reading (dBuV)	Det	101836_With EX_N[dB]	CABLELOSS(dB)	Corrected Reading (dB(uVolts))	CFR 47 FCC PART 15 Class B QP	Margin (dB)	CFR 47 FCC PART 15 Class B AV	Margin (dB)
13	.18	36.36	Pk	10	.2	46.56	64.49	-17.93	-	-
14	.177	19.67	Av	10	.2	29.87	-	-	54.63	-24.76
15	.438	30.1	Pk	9.9	.2	40.2	57.1	-16.9	-	-
16	.417	18.22	Av	9.9	.2	28.32	-	-	47.51	-19.19
17	.531	29.85	Pk	9.9	.2	39.95	56	-16.05	-	-
18	.537	14.41	Av	9.9	.2	24.51	-	-	46	-21.49
19	.729	29.98	Pk	9.9	.2	40.08	56	-15.92	-	-
20	.717	9.17	Av	9.9	.2	19.27	-	-	46	-26.73
21	5.931	30.67	Pk	9.8	.3	40.77	60	-19.23	-	-
22	5.934	15.05	Av	9.8	.3	25.15	-	-	50	-24.85
23	7.932	31.74	Pk	9.9	.3	41.94	60	-18.06	-	-
24	7.932	14.26	Av	9.9	.3	24.46	-	-	50	-25.54

Pk - Peak detector
Av - Average detection

UL Korea, Ltd. Suwon Laboratory FORM ID: FCC_15C(04)
218 Maeyeong-ro, Yeongtong-gu, Suwon-si, Gyeonggi-do, 16675, Korea TEL: (031) 337-9902 FAX: (031) 213-5433
UL Korea, Ltd. Confidential
This report shall not be reproduced except in full, without the written approval of UL Korea, Ltd.

10. FREQUENCY STABILITY

LIMIT

§15.225 (e) The frequency tolerance of the carrier signal shall be maintained within ±0.01% of the operating frequency, over a temperature variation of -20 degrees to +50 degrees C at normal supply voltage, and for a variation in the primary supply voltage from 85% to 115% of the rated supply voltage at a temperature of 20 degrees C. For battery operated equipment, the equipment tests shall be performed using a new battery.

TEST PROCEDURE

ANSI C63.10 §6.8

RESULTS

Reference Frequency: EUT Channel 13.56 MHz @ 20ºC Limit: ± 100 ppm = 1.356 kHz										
Power Supply	Envir.	Frequency Deviation Measureed with Time Elapse								
(Vdc)	Temp (°C)	Start up (MHz)	Delta (ppm)	@ 2mins (MHz)	Delta (ppm)	@ 5mins (MHz)	Delta (ppm)	@ 10 mins (MHz)	Delta (ppm)	Limit (ppm)
3.85	50	13.559944450	3.971	13.559938002	4.446	13.559933302	4.793	13.559931304	4.940	100
3.85	40	13.559963410	2.573	13.559953290	3.319	13.559950204	3.547	13.559948289	3.688	100
3.85	30	13.559980487	1.313	13.559978267	1.477	13.559977323	1.547	13.559976395	1.615	100
3.85	***20***	***13.559998296***	***0***	***13.560000228***	-0.142	***13.560001601***	-0.244	***13.560002291***	-0.295	***100***
3.85	10	13.560014189	-1.172	13.560019203	-1.542	13.560022606	-1.793	13.560024777	-1.953	100
3.85	0	13.560031728	-2.465	13.560032784	-2.543	13.560034291	-2.654	13.560033770	-2.616	100
3.85	-10	13.560025767	-2.026	13.560021564	-1.716	13.560021109	-1.682	13.560019314	-1.550	100
3.85	-20	13.560002229	-0.290	13.559986504	0.870	13.559978410	1.467	13.559976165	1.632	100
3.85	-30	13.559943030	4.076	13.559918839	5.860	13.559904889	6.888	13.559903591	6.984	100

Reference Frequency: EUT Channel 13.56 MHz @ 20ºC Limit: ± 100 ppm = 1.356 kHz										
Power Supply	Envir.	Frequency Deviation Measureed with Time Elapse								
(Vdc)	Temp (°C)	Start up (MHz)	Delta (ppm)	@ 2mins (MHz)	Delta (ppm)	@ 5mins (MHz)	Delta (ppm)	@ 10 mins (MHz)	Delta (ppm)	Limit (ppm)
3.85	***20***	***13.559998296***	***0***	***13.560000228***	-0.142	***13.560001601***	-0.244	***13.560002291***	-0.295	***100***
4.35	20	13.559998462	-0.012	*13.560000393*	-0.155	*13.560001892*	-0.265	*13.560002308*	-0.296	100
3.60	20	13.559998531	-0.017	*13.560000462*	-0.160	*13.560001143*	-0.210	*13.560002334*	-0.298	100

No non-compliance noted.

END OF TEST REPORT

UL Korea, Ltd. Suwon Laboratory FORM ID: FCC_15C(04)
218 Maeyeong-ro, Yeongtong-gu, Suwon-si, Gyeonggi-do, 16675, Korea TEL: (031) 337-9902 FAX: (031) 213-5433
UL Korea, Ltd. Confidential
This report shall not be reproduced except in full, without the written approval of UL Korea, Ltd.