TEST REPORT

FCC PART 2: RF Exposure Compliance Test for SM-F766B
Certification

APPLICANT
SAMSUNG Electronics Co., Ltd.

REPORT NO.
HCT-SR-2505-FC010

DATE OF ISSUE
May 12, 2025

Tested by
JungHun Park

Technical Manager
Yun Jeang Heo

HCT CO., LTD.
BongJai Huh / CEO

The report shall not be (partly) reproduced except in full without approval of the laboratory.
HCT CO., LTD. 2-6, 73, 74, Seoicheon-ro 578beon-gil, Majang-myeon, Icheon-si, Gyeonggi-do, Republic of Korea Tel. +82 31 645 6300 Fax. +82 31 645 6401

HCT CO.,LTD.
2-6, 73, 74, Seoicheon-ro 578beon-gil, Majang-myeon, Icheon-si, Gyeonggi-do, 17383 KOREA
Tel. +82 31 645 6300 Fax. +82 31 645 6401

TEST REPORT

PART 2 RF Exposure Compliance Test for certification

REPORT NO.
HCT-SR-2505-FC010

DATE OF ISSUE
May 12, 2025

FCC ID
A3LSMF766B

Applicant	SAMSUNG Electronics Co., Ltd 129, Samsung-ro, Yeongtong-gu, Suwon-Si, Gyeonggi-do, 16677, Korea
Product Name Model Name	Mobile Phone SM-F766B
Date of Test	May 06, 2025 ~ May 08, 2025
Location of Test	■ Permanent Testing Lab ☐ On Site Testing Lab (Address: 74, Seoicheon-ro 578beon-gil, Majang-myeon, Icheon-si, Gyeonggi-do, 17383 KOREA)
FCC Rule Part(s)	CFR § 2.1093
Results	Pass

The report shall not be (partly) reproduced except in full without approval of the laboratory.

REVISION HISTORY

The revision history for this test report is shown in table.

Revision No.	Date of Issue	Description
0	May 12, 2025	Initial Release

Notice

Content
The results shown in this test report only apply to the sample(s), as received, provided by the applicant, unless otherwise stated. The test results have only been applied with the test methods required by the standard(s). The laboratory is not accredited for the test results marked *. Information provided by the applicant is marked **. Test results provided by external providers are marked ***. When confirmation of authenticity of this test report is required, please contact www.hct.co.kr The test results in this test report are not associated with the ((KS Q) ISO/IEC 17025) accreditation by KOLAS (Korea Laboratory Accreditation Scheme) / A2LA (American Association for Laboratory Accreditation) that are under the ILAC (International Laboratory Accreditation Cooperation) Mutual Recognition Agreement (MRA).

The report shall not be (partly) reproduced except in full without approval of the laboratory.

CONTENTS

1. RF Exposure Limits 5
2. Test Location 7
3. DEVICE UNDER TEST DESCRIPTION 8
4. Tx Varying Transmission Test Cases and Test Proposal 11
5. SAR Time Averageing Validation Test Procedures 14
6. Test Configurations 21
7. Time-varying Tx power measurement for below 6GHz frequency 23
8. Equipment List 34
9. Conclusion 35
Appendix A: Test Sequences 36
Appendix B: WLAN TAS Test Setup Photos 37

The report shall not be (partly) reproduced except in full without approval of the laboratory.

1. RF Exposure Limits

1.1 RF Exposure Limits for Frequencies < 6 GHz

HUMAN EXPOSURE	UNCONTROLLED ENVIRONMENT General Population (W/kg) or (mW/g)	CONTROLLED ENVIRONMENT Occupational (W/kg) or (mW/g)
SPATIAL PEAK SAR * (Partial Body)	1.6	8.0
SPATIAL AVERAGE SAR ** (Whole Body)	0.08	0.4
SPATIAL PEAK SAR *** (Hands / Feet / Ankle / Wrist)	4.0	20.0

NOTES:

* The Spatial Peak value of the SAR averaged over any 1 g of tissue (defined as a tissue volume in the shape of a cube) and over the appropriate averaging time.

** The Spatial Average value of the SAR averaged over the whole-body.

*** The Spatial Peak value of the SAR averaged over any 10 g of tissue (defined as a tissue volume in the shape of a cube) and over the appropriate averaging time.

Uncontrolled Environments are defined as locations where there is the exposure of individuals who have no knowledge or control of their exposure. The general population/uncontrolled exposure limits are applicable to situations in which the general public may be exposed or in which persons who are exposed as a consequence of their employment may not be mad fully aware of the potential for exposure or cannot exercise control over their exposure. Members of the general public would come under this category when exposure is not employment-related; for example, in the case of a wireless transmitter that exposes persons in its vicinity.

Controlled Environments are defined as locations where there is exposure that may be incurred by persons who are aware of the potential for exposure, (i.e.as a result of employment or occupation). In general, occupational/controlled exposure limits are applicable to situations in which persons are exposed as a consequence of their employment, who have been made fully aware of the potential for exposure and can exercise control over their exposure. This exposure category is also applicable when the exposure is of a transient nature due to incidental passage through a location where the exposure levels may be higher than the general population/uncontrolled limits, but the exposed person is fully aware of the potential for exposure and can exercise control over his or her exposure by leaving the area or by some other appropriate means.

The report shall not be (partly) reproduced except in full without approval of the laboratory.

1.2 Interim Guidance for Time Averaging

Per October 2018 TCB Workshop Notes, the below time averaging windows can be used for assessing time averaged exposures for devices that are capable of actively monitoring and adjusting power output over time to comply with exposure limits.

Interim Guidance	Frequency (GHz)	Maximum Averaging Time (sec)
SAR	< 3	100
	3 – 6	60
MPE	6 - 10	30
	10 - 16	14
	16 – 24	8
	24 – 42	4
	42 – 95	2

The report shall not be (partly) reproduced except in full without approval of the laboratory.

2. Test Location

2.1 Test Laboratory

Company Name	HCT Co., Ltd.
Address	74, Seoicheon-ro 578beon-gil, Majang-myeon, Icheon-si,Gyeonggi-do, 17383 KOREA
Telephone	031-645-6300
Fax.	031-645-6401

2.2 Test Facilities

Our laboratories are accredited and approved by the following approval agencies according to ISO/IEC 17025.

Korea	National Radio Research Agency (Designation No. KR0032)
	KOLAS (Testing No. KT197)

2.3 General Information of the EUT

Model Name	SM-F766B
Equipment Type	Mobile Phone
FCC ID	A3LSMF766B
Application Type	Certification
Applicant	SAMSUNG Electronics Co., Ltd.

The report shall not be (partly) reproduced except in full without approval of the laboratory.

3. DEVICE UNDER TEST DESCRIPTION

3.1 DUT specification

Device Wireless specification overview		
Band & Mode	**Operating Mode**	**Tx Frequency**
GSM850	Voice / Data	824.2 MHz ~ 848.8 MHz
GSM1900	Voice / Data	1 850.2 MHz ~ 1 909.8 MHz
UMTS Band 2	Voice / Data	1 852.4 MHz ~ 1 907.6 MHz
UMTS Band 4	Voice / Data	1 712.4 MHz ~ 1 752.6 MHz
UMTS Band 5	Voice / Data	826.4 MHz ~ 846.6 MHz
LTE FDD Band 2 (PCS)	Voice / Data	1 850.7 MHz ~ 1 909.3 MHz
LTE FDD Band 4 (AWS)	Voice / Data	1 710.7 MHz ~ 1 754.3 MHz
LTE FDD Band 5 (Cell)	Voice / Data	824.7 MHz ~ 848.3 MHz
LTE FDD Band 12	Voice / Data	699.7 MHz ~ 715.3 MHz
LTE FDD Band 13	Voice / Data	779.5 MHz ~ 784.5 MHz
LTE FDD Band 17	Voice / Data	706.5 MHz ~ 713.5 MHz
LTE FDD Band 25	Voice / Data	1 850.7 MHz ~ 1 914.3 MHz
LTE FDD Band 26	Voice / Data	814.7 MHz ~ 848.3 MHz
LTE TDD Band 41	Voice / Data	2 498.5 MHz ~ 2 687.5 MHz
LTE FDD Band 66 (AWS)	Voice / Data	1 710.7 MHz ~ 1 779.3 MHz
NR FDD Band n2 (PCS)	Voice / Data	1 852.5 MHz ~ 1 907.5 MHz
NR FDD Band n5	Voice / Data	826.5 MHz ~ 846.5 MHz
NR FDD Band n25 (PCS)	Voice / Data	1 852.5 MHz ~ 1 912.5 MHz
NR TDD Band n41	Voice / Data	2 501.01 MHz ~ 2 685 MHz
NR FDD Band n66	Voice / Data	1 712.5 MHz ~ 1 777.5 MHz
NR FDD Band n71	Voice / Data	665.5 MHz ~ 695.5 MHz
NR TDD Band n77	Voice / Data	3 705 MHz ~ 3 975 MHz
NR TDD Band n77 DoD	Voice / Data	3 445.01 MHz ~ 3 544.98 MHz
U-NII-1	Voice / Data	5 180 MHz ~ 5 240 MHz
U-NII-2A	Voice / Data	5 260 MHz ~ 5 320 MHz
U-NII-2C	Voice / Data	5 500 MHz ~ 5 720 MHz
U-NII-3	Voice / Data	5 745 MHz ~ 5 825 MHz
U-NII-4	Voice / Data	5 845 MHz ~ 5 885 MHz
U-NII-5	Voice / Data	5 935 MHz – 6 425 MHz
U-NII-6	Voice / Data	6 425 MHz – 6 525 MHz
U-NII-7	Voice / Data	6 525 MHz – 6 865 MHz
U-NII-8	Voice / Data	6 865 MHz – 7 115 MHz
2.4 GHz WLAN	Voice / Data	2 412 MHz ~ 2 472 MHz
Bluetooth / LE 5.4	Data	2 402 MHz ~ 2 480 MHz
NFC	Data	13.56 MHz
WPC	Data	110 kHz ~ 148 kHz
Device Serial Numbers	**Mode**	**Serial Number**
	WLAN 2.4G/ 5G/ 6G	YD11868M
	The manufacturer has confirmed that the devices tested have the same physical, mechanical and thermal characteristics are within operational tolerances expected for production units.	

The report shall not be (partly) reproduced except in full without approval of the laboratory.

Measurement Plot Summary Table

Test Case#	Test Scenario	Tech	Band	Antenna	DSI	Channel	Frequency	Conducted Plot No.
1	Time-varying Tx power transmission	WLAN	2.4GHz	Sub3(G)+ Sub4(H)	1	11	2462	1
2		WLAN	5GHz	Sub2(F)	1	122	5610	2
3		WLAN	6GHz	Sub2(F)	1	43	6165	3
4	*Antenna/Band Switch	WLAN	6GHz	Sub2(F)	1	43	6165	4
			2.4GHz	Sub3(G)+ Sub4(H)	1	11	2462	
5		WLAN	6GHz	Sub2(F)	1	43	6165	5
			5GHz	Sub2(F)	1	122	5610	
6	*DSI Switch	WLAN	2.4GHz	Sub3(G)+ Sub4(H)	1	11	2462	6
			2.4GHz	Sub3(G)+ Sub4(H)	0	11	2462	
7	*SAR1 vs SAR2	WLAN	5GHz	Sub2(F)	1	122	5610	7
			2.4GHz	Sub3(G)+ Sub4(H)	1	11	2462	

The report shall not be (partly) reproduced except in full without approval of the laboratory.

3.2 Test Under Dynamic Transmission Condition for RF Exposure Compliance

This device is enabled with Qualcomm Fast Connect features. These features perform their proprietary time averaging algorithms in real time to control and manage transmitting power and ensure the time-averaged RF exposure is in compliance with FCC requirements at all times.

Regulatory RF exposure limits are defined with respect to time-averaged RF exposure. Qualcomm Fast Connect TAS algorithm performs transmit power control to ensures at all times the wireless device is in compliance with the configured limit of RF exposure averaged over a defined time window denoted as TSAR for SAR.

- A 30 second time-averaging window is used by FastConnect TAS for WLAN operation in 2.4GHz, 5GHz, and 6GHz WLAN bands.
- For ICNIRP 1998, the time-averaging window for radios operating <10GHz is 360 seconds. Fast Connect TAS uses a 360s window for regions outside the U.S (e.g., ISED Canada).

The purpose of this report is to demonstrate the Qualcomm FastConnect time averaged SAR (TAS) feature RF exposure compliance under dynamic transmission scenarios. This test report provides reference to test results and plots using parameters is determined from for static SAR test and configurate in FastConnect TAS BDF for validating the FastConnect TAS feature.

WLAN 1g SAR (W/kg)		WLAN 10g SAR (W/kg)	
Total Uncertainty	1.0 dB	Total Uncertainty	1.0 dB
SAR_regulatory_limit	1.6 W/kg	SAR_regulatory_limit	4.0 W/kg
SAR_design_target	0.8 W/kg	SAR_design_target	2.0 W/kg
Averaged Time Window size	30sec		

This purpose of the Part 2 report is to demonstrate the DUT complies with FCC RF exposure requirement under Tx varying transmission scenarios, thereby validity of Qualcomm FastConnect TAS feature implementation in this device. It serves to compliment the Part 0 and Part 1 Test Reports to justify compliance per FCC

All Part 2 tests of this device were conducted according to the guidelines of the Qualcomm document 80-W2112-5 Rev. YE

■<u>Test case reduction for multiple filings</u>

Per the Guidance of the FCC and Qualcomm (Document No: 80-W2112-5 Rev. YE, Sec.4.2,)

For multiple filings with same chipset, the test case reduction proposal for Part 2 testing is:
1. Full set of tests in the first filing, i.e., both power measurement and RF exposure measurement, are required.

2. For all subsequent filings with the same chipset, only power measurement (scenarios (a) – (h)) is required. In the case of scenario (a) time-varying Tx transmission test, only one band (instead of two bands) per technology is sufficient

The report shall not be (partly) reproduced except in full without approval of the laboratory.

■ **Regulatory body configuration:**

Based on regulatory requirement for each country/regions, FCC time window/limits and/or ICNIRP 1998 time window/limits can be selected and/or combined. Additionally, Time-Averaged Exposure mode or Peak Exposure mode can be selected based on MCC for Qualcomm FastConnect TAS to operate. In Time-Averaged Exposure mode, the wireless device can instantaneously transmit at high transmit powers and exceed the Plimit for a short duration before limiting the power to maintain the time-averaged transmit power under the Plimit; while in Peak Exposure mode, the maximum instantaneous transmit power is limited to Plimit. Depending on BDF file, regulatory body configuration is different.

■ **force peak for Tx transmitting frequency**

The Qualcomm FastConnect TAS feature applies time-averaging windows when the device detects an MCC that matches Time-Averaged Exposure MCCs list. For each of the MCCs under Time-Averaged Exposure MCCs list, the Qualcomm FastConnect TAS feature can limit either maximum peak power or maximum time-average power to Plimit per tech/band/antenna/DSI. If force peak is set to '1' for a given tech/band/antenna/DSI in the BDF File, then the Qualcomm FastConnect TAS feature limits the maximum Tx power to Plimit for the selected tech/band/antenna/DSI. In other words, with force peak set to '1', under static condition (i.e., fixed tech/band/antenna/DSI) and in single active Tx scenario, Qualcomm FastConnect TAS can guarantee Tx power level of Plimit at all times.

This device was tested in part 2 of Tx Varying transmission(Time-Averaged Exposure mode) testing using DBF File of US MCC applied and BDF file of Peak mode was used to test the peak exposure mode.

4. Tx Varying Transmission Test Cases and Test Proposal

To validate time averaging feature and demonstrate the compliance in Tx varying transmission conditions, the following transmission scenarios are covered in Part 2 test:

1. Time-Varying Test Sequence: This test proves the FastConnect TAS accounts for Tx power variations in time accurately.
2. Change in antenna (applicable when the software supports SISO diversity operation): This test is to prove that FastConnect functions correctly during transitions in Plim (at different antennas) within the same WLAN band and same Antenna Group. If device supports SISO and transmission diversity between an Antenna to another antenna, then this test is applicable. If WLAN MIMO CDD is implemented, then device is always under MIMO transmission, in this case, this test is NOT applicable.
3. Change in device state (DSI) (applicable when the device supports multiple DSI): This is to prove that FastConnect TAS performs power enforcements to maintain compliance during transitions in the device state.
4. Change in WLAN band : This is to prove that the FastConnect TAS functions correctly during transitions in radios and bands.
5. Simultaneous Transmission: This is to prove that the FastConnect TAS functions in transition from 1st standalone WLAN radio to simultaneous WLAN radios and back to 2nd standalone WLAN radio.

As described in Part 0 report, the RF exposure is proportional to the Tx power for a SAR- and PD-characterized wireless device. Thus, feature validation in Part 2 can be effectively performed through conducted (for f < 6GHz) and radiated (for f ≥ 6GHz) power measurement. Therefore, the compliance demonstration under dynamic transmission conditions and feature validation are done in conducted/radiated power measurement setup for transmission scenario 1 through 5.

The report shall not be (partly) reproduced except in full without approval of the laboratory.

■Test case reduction for multiple filings

Per Qualcomm Document (80-W2112-5 Rev. YE ,Sec 4.2) , For Multiple variants which uses the same chipset. -the same chipset and Qualcomm FastConnect TAS algorithm are used in the new model- the number of test cases in Part 2 can be reduced in the case of multiple filings using same chipset (post full part 2 test on the first filing), i.e., the essential test cases in power measurement are required to ensure the Qualcomm FastConnect TAS performs as expected in the new design, but the RF exposure measurement can be excluded.

Furthermore, as described in Section 5.2.1of 80-W2112-5 Rev. YE, for scenario (a), two bands per technology are selected for time-varying Tx transmission test to provide high confidence. In this case, one band per technology can be considered as well to reduce test cases further.

The strategy for testing in Tx varying transmission condition is outlined as follows:

Demonstrate the total RF exposure averaged over FCC defined time windows does not exceed FCC's SAR limits, through time-averaged power measurements

1. Measure conducted Tx power (for *f*< 6GHz) versus time.
2. Convert it into RF exposure and divide by respective limits to get normalized exposure use equation as described in this section.
3. Perform running time-averaging over FCC defined time windows.
4.Demonstrate that the total normalized time-averaged RF exposure is less than 1 for all transmission scenarios (i.e., transmission scenarios 1, 2, 3, 4, 5) at all times.

Mathematical expression:

- For sub-6 transmission only or if regulator requires SAR for WLAN 6GHz band:

$$1g_or_10gSAR(t) = \boxed{\frac{Conducted_Tx_power\ (t)}{Conducted_Tx_power_Plim}} * 1g_or_10gSAR_\ Plim \qquad (1a)$$

$$\frac{\frac{1}{TSAR}\int_{t-TSAR}^{t} 1g_or_10gSAR(t)\,dt}{FCC\ or\ ICNIRP\ SAR\ limit} \leq 1 \qquad (1b)$$

- For frequency greater than 6GHz if regulator requires APD. (Applicable for ISED)

$$4cm^2\ PD(t) = \boxed{\frac{Conducted_Tx_power\ (t)}{Conducted_Tx_power_Plim}} * 4cm^2\ PD_\ Plim \qquad (1c)$$

$$\frac{\frac{1}{TSAR}\int_{t-TSAR}^{t} 4cm2\ PD(t)\,dt}{APD\ 4cm^2 PD\ limit} \leq 1 \qquad (1d)$$

where, $conducted_Tx_power(t)$, $conducted_Tx_power_P_{limit}$, and $1g_or_10gSAR_P_{limit}$ correspond to the measured instantaneous conducted Tx power and conducted Tx power at Plim of DUT, and $1g_or_10gSAR$ values at Plim for the worst-case radio configuration within the tested band/Antenna/DSI. Similarly, $4cm2$ PD_ $Plim$ correspond to the APD values at P_{lim} for the worst-case radio configuration within the tested band (greater than 6GHz)/Antenna/DSI.

The report shall not be (partly) reproduced except in full without approval of the laboratory.

The equations (1a) & (1b) are applicable if SAR is required by regulator to address RF exposure for the band greater than 6GHz.

NOTE: The ratio circled in red square is obtained from the measurement on the radio configuration is selected for validation test while the $1g_or_10gSAR_P_{lim}$ and $4cm^2$ PD_ $Plim$ must be from the SAR value in the worst-case radio configuration within the tested band/Antenna/DSI in static SAR report and scale to the $conducted_Tx_power_Plim$ level is measured from DUT used in validation test.

Demonstrate the total RF exposure averaged over FCC defined time windows does not exceed FCC's SAR limits, through time-averaged SAR measurements. Note as mentioned earlier, this measurement is performed for transmission scenario 1 only.

Mathematical expression:

- For sub-6 transmission only or if regulator requires SAR for WLAN 6GHz band:

$$1g_or_10gSAR(t) = \boxed{\frac{pointSAR\ (t)}{pointSAR_P_{lim}}} * 1g_or_10gSAR_Plim \qquad (2a)$$

$$\frac{\frac{1}{TSAR}\int_{t-TSAR}^{t} 1g_or_10gSAR(t)\,dt}{FCC\ or\ ICNIRP\ SAR\ limit} \leq 1 \qquad (2b)$$

- For frequency greater than 6GHz if regulator requires APD. (Applicable for ISED)

$$4cm^2\ PD(t) = \boxed{\frac{pointSAR\ (t)}{pointSAR_P_{lim}}} * 4cm^2\ PD_Plim \qquad (2c)$$

$$\frac{\frac{1}{TSAR}\int_{t-TSAR}^{t} 4cm^2\ PD(t)\,dt}{APD\ 4cm^2 PD\ limit} \leq 1 \qquad (2d)$$

where, $pointSAR(t)$, $pointSAR_P_{lim}$, and $1g_or_10gSAR_Plim$ correspond to the measured instantaneous point SAR and point SAR at P_{lim} of DUT, and $1g_or_10gSAR$ values at P_{lim} for the worst-case radio configuration within the tested band/Antenna/DSI. Similarly, $4cm^2$ PD_ $Plim$ is the APD values at P_{lim} for the worst-case radio configuration within the tested band (greater than 6GHz)/Antenna/DSI.

The equations (2a) & (2b) are applicable if SAR is required by regulator to address RF exposure for the band greater than 6GHz.

NOTE: The ratio circled in red square is obtained from the measurement on the radio configuration is selected for validation test while the $1g_or_10gSAR_Plim$ and 4cm2 PD_ $Plim$ must be from the SAR value in the worst-case radio configuration within the tested band/Antenna/DSI in static SAR report and scale to the $conducted_Tx_power_Plim$ level is measured from DUT used in validation test.

The report shall not be (partly) reproduced except in full without approval of the laboratory.

5. SAR Time Averageing Validation Test Procedures

This chapter provides the test plan and test procedure for validating Qualcomm FastConnect TAS feature for sub-6 transmissions. The 100 seconds time window for operating f< 3GHz is used as an example to detail the test procedures in this chapter. The same test plan and test procedures described in this chapter apply to 60 seconds time window for operating $f \geq$ 3GHz and 30 second time-window for all WLAN technologies operating.

5.1 Test sequence determination for validation

Following the FCC recommendation, one test sequences having time-variation in Tx power are predefined for validation:

Test sequence 1: request EUT's Tx power to be at maximum power, measured P_{max} †, for 30s, then requesting for half of the maximum power, i.e., measured $P_{max}/2$, for the rest of the time.

The details for generating these two test sequences is described and listed in Appendix A.

NOTE: For test sequence generation, "measured *Plimit*" and "measured P_{max}" are used instead of the "*Plimit*" specified in BDF entry and "P_{max}" specified for the device, because Qualcomm FastConnect TAS feature operates against the actual power level of the "*Plimit*" that was calibrated for the EUT. The "measured *Plimit*" accurately reflects what the feature is referencing to, therefore, it should be used during feature validation testing. The RF tune up and device- to-device variation are already considered in Part 0 report prior to determining *Plimit*.

5.2 Test configuration selection criteria for validating Qualcomm FastConnect TAS feature

For validating Qualcomm FastConnect TAS feature, this section provides a general guidance to select test cases. In practice, an adjustment can be made in test case selection. The justification/clarification may be provided.

5.2.1 Test configuration selection for time-varying Tx power transmission

Select one representative test channel from all the available radio configurations (band/ant(s)/DSI) that has Pmax > Plim + device uncertainty.

- If Pmax < Plim + device uncertainty for all radio configurations, then select radio configuration with largest (Pmax dBm – Plim dBm) value.
- If Pmax > Plim + device uncertainty for more than one radio configuration. Then, order of preference is given by:

1. If multiple radio configurations (band/ant(s)/DSI) meet this criteria, then SISO is preferred over MIMO due to simplified test setup.
2. After determining SISO vs. MIMO configuration, then select the configuration that has largest (Pmax dBm – Plim dBm) dB delta.

- Test to be performed at two bands for Time-Varying Test sequence test. If only one band within a configuration has Pmax > Plim and Plim > Pmax in all other configurations, then only one band needs to be tested. Test is not required if Plim > Pmax for all radio configurations.

The report shall not be (partly) reproduced except in full without approval of the laboratory.

5.2.2 Test configuration selection for change in antenna

This test scenario does not apply if SISO mode diversity is not supported. (e.g., CDD is enabled and always use MIMO). The criteria to select test configuration for Change in Antenna measurement is:

- The antennas selected for this test should be in the same antenna group.
- Whenever possible and supported by the EUT, first select antenna switch configuration within the same band/DSI (i.e., same band and DSI combination), and having different Plim, and having both Pmax > Plim + device uncertainty where possible. Otherwise, select at least one antenna having Pmax > Plim + device uncertainty.

1. If multiple radio configurations (band/DSI) meet Pmax > Plim + device uncertainty, then select the configuration that has largest (Pmax dBm – Plim dBm) dB delta.
2. If Pmax < Plim + device uncertainty for all radio configurations, then select radio configuration with largest (Pmax dBm – Plim dBm) value.

- If the EUT does not support antenna switch within the same band but has multiple transmitting antennas to support different frequency bands, then antenna switch test should be performed in combination with Change in WLAN band test scenario.
- Test for Change in Antenna is not required if all Plim > Pmax for all radio configurations.

5.2.3 Test configuration selection for change in DSI

The criteria to select a test configuration for DSI change test is Select a technology/band having the *Plimit* <*Pmax* within any technology and DSI group, and for the same technology/band having a different *Plimit* in any other DSI group. Note that the selected DSI transition need to be supported by the device.

NOTE: This test is performed with the EUT's Tx power requested to be at maximum power in selected technology/band, and DSI change is conducted during Tx power enforcement duration (i.e., during the time when EUT is forced to have Tx power at *Preserve*).

5.2.4 Test configuration selection for change in WLAN Band

The criteria to select test configuration for Change in WLAN band measurement is:

- First select both bands in a DSI having Pmax > Plim + device uncertainty where possible. Otherwise, select at least one band having Pmax > Plim + device uncertainty.
- If Pmax < Plim + device uncertainty for all radio configurations, then select radio configuration with largest (Pmax dBm – Plim dBm) value.
- If Pmax > Plim + device uncertainty for more than one radio configuration. Then, order of preference is given by:

1. If multiple radio configurations (band/ant(s)/DSI) meet this criteria and if device support SISO. Then SISO is preferred over MIMO due to simplified test setup.
2. After determining SISO vs. MIMO configuration, then select the configuration that has largest (Pmax dBm – Plim dBm) dB delta.

- The antennas corresponding to the selected bands should be in the same antenna group.
  Test for Change in WLAN band is not required if all Plim > Pmax for all radio configurations.

The report shall not be (partly) reproduced except in full without approval of the laboratory.

5.2.5 Simultaneous Transmission

The criteria to select test configuration for Simultaneous Transmission measurement is:

- The bands must be selected from supported Simultaneous Transmission configuration. (e.g., WLAN DBS and/or HBS)
- First select both bands in a DSI having Pmax > Plim + device uncertainty where possible. Otherwise, select at least one band having Pmax > Plim + device uncertainty.
- If Pmax < Plim + device uncertainty for all radio configurations, then select radio configuration with largest (Pmax dBm – Plim dBm) value.
- If Pmax > Plim + device uncertainty for more than one radio configuration. Then, order of preference is given by:

1. If multiple radio configurations (band/ant(s)/DSI) meet this criteria and if device support SISO.
Then SISO is preferred over MIMO due to simplified test setup.
2. After determining SISO vs. MIMO configuration, then select the configuration that has largest
(Pmax dBm – Plim dBm) dB delta.

- The antennas corresponding to the selected bands should be in the same antenna group.

Even if a device has Plim > Pmax for all radio configurations, then “Simultaneous Transmission” test scenario should still be performed for validation of FastConnect TAS device.

The report shall not be (partly) reproduced except in full without approval of the laboratory.

5.3 Test procedures for conducted power measurements

1. Measure Plim for modes at validation antenna ports, bands and/or DSIs with FastConnect TAS Peak Exposure Mode enabled with callbox to establish the chosen mode for test. Denote this measured power value as Conducted_Tx_power_Plim.(The measurement of Peak Exposure Mode should be performed with 70% or higher WLAN duty cycle, using iPerf to generate UL traffic).
2. Set EUT to the intended FastConnect TAS mode.
3. Establish radio link with the callbox in the selected band.
4. Request EUT to transmit in following Transition sequence

a. Time-Varying Test Sequence – Request EUT to transmit maximum power for at least 30s with 100% duty cycle and 50% duty cycle for 60s to determine time- averaged 1gSAR versus time.

b. Change in antenna – EUT operates at Antenna 1 (e.g., Main antenna port) and requests to transmit at maximum power for at least 60s. Then switch to operation on Antenna 2 (e.g., Aux antenna port), followed by at least 120s of observation.

c. Change in device state (DSI) – EUT operates at DSI 1 and requests to transmit at maximum power for at least 60s. Then switch to operation on DSI 2, followed by at least 120s of observation (observation period includes transition time).

d. Change in WLAN band – EUT operates at Band 1 and requests to transmit at maximum power for at least 60s. Then it switches to Band 2 using the same antenna port and observes another 120s (observation period includes transition time).

e. Simultaneous Transmissions: First establish WLAN connection with the callbox in radio2 configuration and request radio2 configuration to transmit at maximum duty cycle for at least 120s to test predominantly radio2 SAR exposure scenario. Then add radio1 configuration to the existing radio2 configuration call, and request both radio1 and radio2 to transmit at maximum duty cycle to test radio1 and radio2 SAR exposure scenario for at least 120s. Then drop (or request low duty cycle) for radio2 configuration to test predominantly radio1 SAR exposure scenario for another at least 120s. Record the conducted Tx powers for both radio1 and radio2 configurations for the entire duration of this test.

Note: radio1 and radio2 should operate at different band.

The report shall not be (partly) reproduced except in full without approval of the laboratory.

5. Measure and record Tx power versus time

a. Once the measurement is done, extract instantaneous Tx power versus time, and convert the conducted Tx power into 1g_or_10g SAR value, see Eq. (1a), using Step 1 result.

b. Then perform 30s moving average to determine time-averaged 1g_or_10gSAR versus time as illustrated in Figure 5-1

Figure 5-1 Time running average illustration

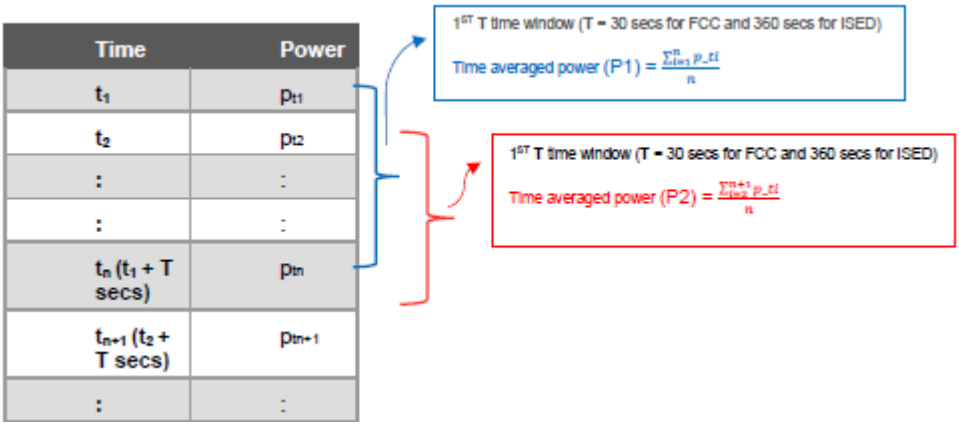

The following normalization is used to convert 1g_or_10gSAR exposure using Equation (1a) and (1c) in section 4 to validate the continuity of RF exposure limits during the transition. The procedures from step1 and step 2 in this section should be completed for each configuration under test and use below equations to validate the RF exposure during the transition.

☐ if tested with both radio configurations below 6GHz:

$$1g_or_10gSAR_1(t) = \frac{Conducted_Tx_power_1\,(t)}{Conducted_Tx_power_Plim_1} * 1g_or_10gSAR_Plim_1 \qquad (4a)$$

$$1g_or_10gSAR_2(t) = \frac{Conducted_Tx_power_2\,(t)}{Conducted_Tx_power_Plim_2} * 1g_or_10gSAR_Plim_2 \qquad (4b)$$

$$\frac{\frac{1}{TSAR}\left[\int_{t-TSAR}^{t1} 1g_or_10gSAR1(t)\,dt + \int_{t-TSAR}^{t} 1g_or_10gSAR2(t)\,dt\right]}{FCC\ or\ ICNIRP\ SAR\ limit} \leq 1 \qquad (4c)$$

where, conducted_Tx_power_1(t), conducted_Tx_power_ $Plim$ _1, and 1g_or_10gSAR_ $Plim$ _1 correspond to the instantaneous Tx power, conducted Tx power at Plim_1 of DUT, and compliance 1g_or_10gSAR values of Antenna 1 (or Band 1 or DSI1) at Plim_1; conducted_Tx_power_2(t), conducted_Tx_power_ $Plim$ _2, and 1g_or_10gSAR_ $Plim$ _2 correspond to the instantaneous Tx power, conducted Tx power at Plim_2 of DUT, and compliance 1g_or_10gSAR values of Antenna 2 (or Band 2 or DSI2) at Plim_2. Transition from the Antenna 1 (or Band 1 or DSI1) to the Antenna 2 (or Band 2 or DSI2) happens at time-instant 't1'.

The report shall not be (partly) reproduced except in full without approval of the laboratory.

☐ if tested with both radio configurations greater than 6GHz bands that are assessed using APD (e.g., applicable for ISED):

$$1g_or_10gSAR_1(t) = \frac{Conducted_Tx_power_1\,(t)}{Conducted_Tx_power_Plim_1} * 1g_or_10gSAR_Plim_1 \qquad (5a)$$

$$4cm^2\ PD_2(t) = \frac{Conducted_Tx_power_2\,(t)}{Conducted_Tx_power_Plim_2} * 4cm^2\ PD_Plim_2 \qquad (5b)$$

$$\frac{\frac{1}{TSAR}\int_{t-TSAR}^{t1} 1g_or_10gSAR(t)\,dt}{ICNIRP\ SAR\ limit} + \frac{\frac{1}{TSAR}\int_{t-TSAR}^{t} 4cm2\ PD(t)\,dt}{APD\ 4cm^2 PD\ limit} \leq 1 \qquad (5c)$$

where, conducted_Tx_power_1(t), conducted_Tx_power_ $Plim$ _1, and 4cm2 PD_ $Plim$_1 correspond to the instantaneous Tx power, conducted Tx power at Plim_1 of DUT, and compliance 4cm2 PD values (APD) of Band 1 (or Antenna 1) at Plim_1; conducted_Tx_power_2(t), conducted_Tx_power_ $Plim$ _2, and 4cm2 PD_ $Plim$_2 correspond to the instantaneous Tx power, conducted Tx power at Plim_2 of DUT, and compliance 4cm2 PD values (APD) of Antenna Band 2 (or Antenna 2) at Plim_2. Transition from the Band 1 (or Antenna 1) to the Band 2 (or Antenna 2) happens at time- instant 't1'.

6. Make another plot containing:

a. Computed time-averaged 1g_or_10gSAR (and/or 4cm2 PD) versus time from above procedure.

b. Corresponding regulatory 1g_or_10gSAR (and/or 4cm2 PD) limit.

The validation criteria is, at all times, the combined time-averaged 1g_or_10gSAR (and/or 4cm2 PD) versus time shall not exceed the regulatory 1g_or_10gSAR (and/or 4cm2 PD) limit.

The report shall not be (partly) reproduced except in full without approval of the laboratory.

5.4 Test procedure for time-varying SAR measurements

The pointSAR test is performed only with Time-Varying Test Sequence to provide high confidence in the algorithm validation. The radio configuration for this test is selected by following the selection criteria described in Section 5.2.1.

5.4.1 Test procedure

1. For a given radio configuration:

a. Enable WLAN connection with callbox in FastConnect TAS Peak Exposure Mode and enable high duty cycle Tx while performing the following steps.

b. Perform the area scan.

c. Conduct pointSAR measurement at peak location of the area scan for 120s.
This pointSAR value, $pointSAR_Plim$ corresponds to pointSAR at the measured Plim.
The measurement of Peak Exposure Mode should be performed with 70% or higher WLAN duty cycle using iPerf to generate UL traffic.

2. Set EUT to intended FastConnect Time-Averaged Exposure Mode with callbox to establish the same chosen radio configuration (mode/channel) for test.

a. Perform Time-averaged point SAR measurements at the same peak location as Peak Exposure Point SAR measurement for 120s. Note this includes initial 30s with WLAN with very low duty cycle (or WLAN is disconnected) and 90s of high duty cycle (WLAN has to be connected with high uplink traffic).
b. Once the measurement is done, extract instantaneous pointSAR versus time data, pointSAR(t)
c. Convert it into instantaneous 1gSAR versus time by using Equation (2a) and (2c) in Section 4:

$$1g_or_10gSAR(t) = \frac{pointSAR\ (t)}{pointSAR_Plim} * 1g_or_10gSAR_Plim \qquad (2a)$$

$$4cm^2\ PD(t) = \frac{pointSAR\ (t)}{pointSAR_Plim} * 4cm^2\ PD_Plim \qquad (2c)$$

where, $pointSAR_Plim$ corresponds to the value determined in Step 1, and pointSAR(t) corresponds to instantaneous pointSAR determined in Step 2 in this section.
d. Then perform 30s moving average to determine time-averaged 1gSAR versus time.

3. Make one plot containing:

a. Computed time-averaged 1g_or_10gSAR (or 4cm2 PD) versus time determined from Step 2.
b. Regulatory 1g_or_10gSAR (or 4cm2 PD) limit.
The validation criteria for pointSAR measurement is, at all times, the time averaged 1g_or_10gSAR (or 4cm2 PD) versus time shall not exceed the regulatory 1g_or_10gSAR (or 4cm2 PD) limit.

The report shall not be (partly) reproduced except in full without approval of the laboratory.

6. Test Configurations

6.1 WLAN transmission

The *Plimit* values, corresponding to 0.8 W/kg (1gSAR) and 2.0 W/kg (10gSAR) of *SAR_design_target*, for technologies and bands supported by EUT are derived in Part 0 report and summarized in Table6-1

Plim values in green indicate Plimit < Pmax			Plim values in grey indicate Plim > Pmax		
Plimit corresponding to 0.8 W/kg (1g) 2.0W/kg(10g) SAR_Design_target					Pmax
SAR Exposure Position			Head (RCV ON)	Body (BodyWorn/ Hotspot)	Maximum Tune-up Output Power (Burst Average Power) [dBm]
Averaging volume			1g	1g	
separation Distance			0 mm	5 mm	
Mode	Band	Antenna	DSI=1	DSI=0	
WLAN	2.4	G	13.5	14.5	19.0
WLAN	2.4	H	13.5	14.5	19.0
WLAN	2.4	G+H	13.5	14.5	19.0
WLAN	5	F	10.5	15.0	17.0
WLAN	5	H	10.5	15.0	17.0
WLAN	5	F+H	10.5	15.0	17.0
WLAN	6	F	10.0	10.0	16.0
WLAN	6	H	10.0	10.0	16.0
WLAN	6	F+H	10.0	10.0	16.0
Bluetooth	2.4	G	14.5	14.5	18.5
Bluetooth	2.4	H	14.5	14.5	18.5
Bluetooth	2.4	G+H	12.0	17.9	17.0

Table 6-1: *Plimit* for supported technologies and bands (*Plimit* in BDF file)

* Maximum tune up target power, *Pmax*, is configured in NV settings in EUT to limit maximum transmitting power. This power is converted into peak power in NV settings for TDD schemes. The EUT maximum allowed output power is equal to *Pmax* + 1dB device uncertainty.

Based on selection criteria described in Section 5.2.1, the selected technologies/bands for testing time-varying test sequences are highlighted in yellow in Table 6-1. As per Part 1 report, the *Reserve_power_margin*(dB) for Samsung Mobile Phone (FCC ID: A3LSMF766B) is set to calculate Preserve in BDF file, and is used in Part 2 test.

The radio configurations used in Part 2 test for selected technologies, bands, DSIs and antennas are listed in Table 6-2. The corresponding worst-case radio configuration 1gSAR or 10gSAR values for selected technology/band/DSI are extracted from Part 1 report and are listed in the last column of Table 6-2.

Based on equations (1a) and (3a), it is clear that Part 2 testing outcome is normalized quantity, which implies that it can be applied to any radio configuration within a selected technology/band/DSI. Thus, as long as applying the worst-case SAR obtained from the worst radio configuration in Part 1 testing to calculate time-varying SAR exposure in equations (1a) and (3a), the accuracy in compliance demonstration remains the same.

The report shall not be (partly) reproduced except in full without approval of the laboratory.

Table 6-2: Radio configurations selected for Tx varying transmission test

Test Case #	Test Scenario	Tech	Band	Antenna	DSI	Channel	Frequency [MHz]	Mode	SAR Exposure Scenario	Part 1 Worst Case Measured SAR at Plimit (W/kg)
1	Time-varying Tx power transmission	WLAN	2.4GHz	Sub3(G)+ Sub4(H)	1	11	2462	802.11b 1Mbps	Head, Left Tilt, 0mm	0.466
2		WLAN	5GHz	Sub2(F)	1	122	5610	802.11ac80 MCS0	Head, Right Tilt, 0mm	0.212
3		WLAN	6GHz	Sub2(F)	1	43	6165	802.11ax40 MCS0	Head, Right Touch, 0mm	0.114
4	*Antenna/Band Switch	WLAN	6GHz	Sub2(F)	1	43	6165	802.11ax40 MCS0	Head, Right Touch, 0mm	0.114
			2.4GHz	Sub3(G)+ Sub4(H)	1	11	2462	802.11b 1Mbps	Head, Left Tilt, 0mm	0.466
5		WLAN	6GHz	Sub2(F)	1	43	6165	802.11ax40 MCS0	Head, Right Touch, 0mm	0.114
			5GHz	Sub2(F)	1	122	5610	802.11ac80 MCS0	Head, Right Tilt, 0mm	0.212
6	*DSI Switch	WLAN	2.4GHz	Sub3(G)+ Sub4(H)	1	11	2462	802.11b 1Mbps	Head, Left Tilt, 0mm	0.466
			2.4GHz	Sub3(G)+ Sub4(H)	0	11	2462	802.11b 1Mbps	Open Body, Top, 5mm	0.685
7	*SAR1 vs SAR2	WLAN	5GHz	Sub2(F)	1	122	5610	802.11ac80 MCS0	Head, Right Tilt, 0mm	0.212
			2.4GHz	Sub3(G)+ Sub4(H)	1	11	2462	802.11b 1Mbps	Head, Left Tilt, 0mm	0.466

*Total time-averaged normalized RF Exposure limit

This device uses different Device State Index (DSI) to configure different time averaged power levels based on certain exposure scenarios.

Scenario	Description	SAR Test Cases
RCV on (DSI = 1)	Device positioned next to head	Head SAR per KDB Publication 248227 D01 802 11 Wi-Fi SAR
Free (DSI = 0)	Device transmits in Body / hotspot SAR [5mm] Device transmits in Phablet SAR [0mm]	Hotspot SAR per KDB Publication 248227 D01 802 11 Wi-Fi SAR

Based on the selection criteria described in Section 6.2, the radio configurations for the Tx varying transmission test cases listed in Section 6 are:

1. Technologies and bands for time-varying Tx power transmission: The test case 1~3 listed in Table 6-2 are selected to test with the test sequences defined in Section 5.2.1 in both time- varying conducted power measurement and time-varying SAR.

2. Technologies and bands for change in antenna/Band : Based on selection criteria in Section 5.2.2, 5.2.4, for a given DSI=1 (RCV On), test case 4, 5 in Table 6-2 is selected for antenna switch WLAN 6GHz, Ant Sub2 to WLAN 2.4 GHz, Ant Sub3+Sub4 or WLAN 5 GHz, Ant Sub2 in conducted power setup.

3. Technologies and bands for change in DSI: Based on selection criteria in Section 5.2.3, for a given technology and band, test case6 in Table 6-2 is selected for DSI Switch.

4. Technologies and bands for switch in SAR exposure: Based on selection criteria in Section 5.2.5 Scenario 1, test case 7 in Table 6-2 is selected for SAR exposure switching test in one of the supported simultaneous WLAN transmission scenario, i.e, WLAN radio1 and WLAN radio2 active in the same 30s time window, in conducted power setup.

The report shall not be (partly) reproduced except in full without approval of the laboratory.

7. Time-varying Tx power measurement for below 6GHz frequency

7.1 Conducted Measurement Test setup

WLAN Test Setup

The Rohde & Schwarz CMW500 callbox is used in this test. The test setup picture and schematic are shown in Figures 7-1(a) for measurements with a single antenna of EUT (see Appendix B–The test Setup Photo 1). For single antenna measurement, one port (RF3 COM) of the callbox is connected to the RF port of the EUT using a directional coupler. For antenna & technology switch measurement, two ports (RF3 COM and RF4 COM) of the callbox used for signaling two different technologies are connected to a combiner, which is in turn connected to a directional coupler. The other end of the directional coupler is connected to a splitter to connect to two RF ports of the EUT corresponding to the two antennas of interest. In both the setups, power meter is used to tap the directional coupler for measuring the conducted output power of the EUT. For time averaging validation test (Section 5.3.4.a), and DSI switch test (Section 5.3.4.c), only RF3 COM port of the callbox is used to communicate with the EUT. For Change in antenna/band test (Section. 5.3.4.d), and Switch in SAR exposure between WLAN transmitters (Section. 5.3.4.e), both RF3 COM and RF4 COM port of callbox are used to switch from one technology communicating on RF3 COM port to another technology communicating on RF4 COM port. All the path losses from RF port of EUT to the callbox RF COM port and to the power meter are calibrated and automatically entered as offsets in the callbox and the power meter via test scripts on the PC used to control callbox and power meter.

If WLAN 2.4GHz conducted port and WLAN 5GHz conducted port are same on this EUT (i.e., they share the same antenna), then low-/high-pass filter is used to separate WLAN 2.4GHz and WLAN 5GHz signals for power meter measurement via directional couplers, as shown in below Figures 7-1(b) (see Appendix B- Test setup photo-2)

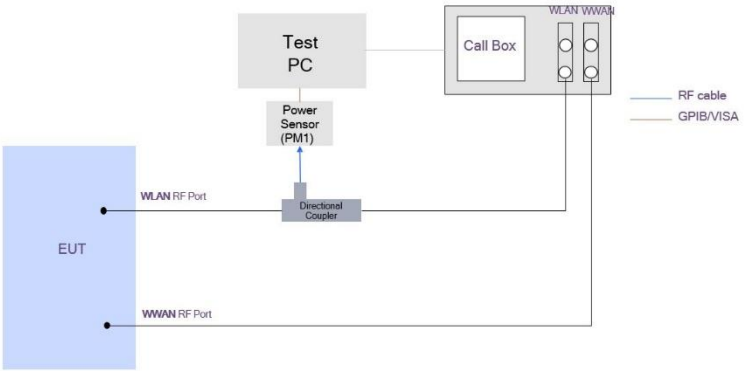

7-1(a) WLAN Time-varying Tx Power Transmission, Change in DSI

The report shall not be (partly) reproduced except in full without approval of the laboratory.

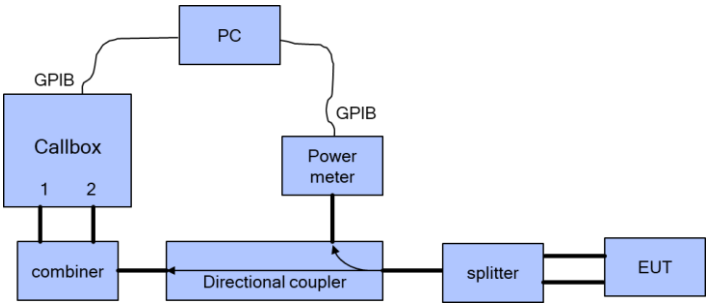

7-2(b) WLAN Change in Antenna/Band

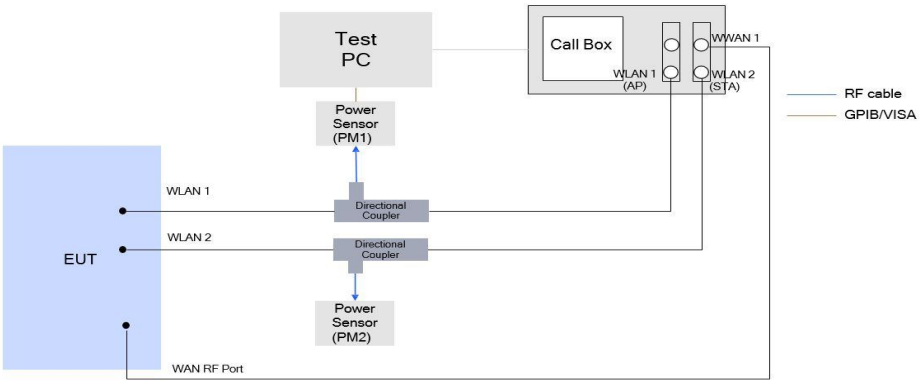

7-1(c) WLAN SAR1 vs SAR2 (DBS)/ WLAN Ant Switch

Figure 7-1 Conducted power measurement setup

Both the callbox and power meter are connected to the PC using GPIB cables. Two test scripts are custom made for automation, and the test duration set in the test scripts is 460 seconds.
For time-varying Tx power measurement, the PC runs the 1st test script to send GPIB commands to control the callbox's requested power versus time, while at the same time to record the conducted power measured at EUT RF port using the power meter. The commands sent to the callbox to request power are:

-0 dBm for 100 seconds (or 30 seconds for WLAN)
- test sequence 1 (defined in Section 5.1 and generated in Section 5.3.1), for 360 seconds (or 90s for WLAN)
- stay at the last power level of test sequence 1 for the remaining time.

Power meter readings are periodically recorded every 100ms. A running average of this measured Tx power over 100 seconds (or 30s for WLAN) is performed in the post-data processing to determine the 100s (or 30s for WLAN) -time averaged power.
For antenna switch, and DSI switch tests, after the call is established, the callbox is set to request the EUT's Tx power at 0dBm for 100 seconds (or 30 seconds for WLAN) while simultaneously starting the 2nd test script runs at the same time to start recording the Tx power measured at EUT RF port using the power meter. After the initial 100 seconds(or 30 seconds for WLAN) since starting the Tx power recording, the callbox is set to request maximum power from the EUT for the rest of the test.
Note that the call drop/re-establish, or technology/band/antenna switch or DSI switch is manually performed when the Tx power of EUT is at *Preserve* level. See Section 5.3 for detailed test procedure of call drop test, technology/band/antenna switch test and DSI switch test.

The report shall not be (partly) reproduced except in full without approval of the laboratory.

7.2 P*limit* and P*max* measurement Results

The measured *Plimit* for all the selected radio configurations given in Table 6-2 are listed in below Table 7-1. *Pmax* was also measured for radio configurations selected for testing time-varying Tx power transmission scenarios in order to generate test sequences following the test procedures in Section 5.1.

Table 7-1: Measured Plimit and Pmax of selected radio configuration

Test Case #	Test Scenario	Tech	Band	Antenna	DSI	Channel	Frequency [MHz]	Mode	SAR Exposure Scenario	Plimit Setting[dBm]	Tune Up Target Power Pmax[dBm]	Measured *Plimit* [dBm]	Measured *Pmax* [dBm]	Part 1 Worst Case Measured SAR at Plimit (W/kg)
1	Time-varying Tx power transmission	WLAN	2.4GHz	Sub3(G)+ Sub4(H)	1	11	2462	802.11b 1Mbps	Head, Left Tilt, 0mm	13.50	19.00	13.88	19.01	0.466
2		WLAN	5GHz	Sub2(F)	1	122	5610	802.11ac80 MCS0	Head, Right Tilt, 0mm	10.50	17.00	9.90	16.95	0.212
3		WLAN	6GHz	Sub2(F)	1	43	6165	802.11ax40 MCS0	Head, Right Touch, 0mm	10.00	12.00	9.85	12.86	0.114
4	*Antenna/Band Switch	WLAN	6GHz	Sub2(F)	1	43	6165	802.11ax40 MCS0	Head, Right Touch, 0mm	10.00	12.00	9.85	12.86	0.114
			2.4GHz	Sub3(G)+ Sub4(H)	1	11	2462	802.11b 1Mbps	Head, Left Tilt, 0mm	13.50	19.00	13.88	19.01	0.466
5		WLAN	6GHz	Sub2(F)	1	43	6165	802.11ax40 MCS0	Head, Right Touch, 0mm	10.00	12.00	9.85	12.86	0.114
			5GHz	Sub2(F)	1	122	5610	802.11ac80 MCS0	Head, Right Tilt, 0mm	10.50	17.00	9.90	16.95	0.212
6	*DSI Switch	WLAN	2.4GHz	Sub3(G)+ Sub4(H)	1	11	2462	802.11b 1Mbps	Head, Left Tilt, 0mm	13.50	19.00	13.88	19.01	0.466
			2.4GHz	Sub3(G)+ Sub4(H)	0	11	2462	802.11b 1Mbps	Open Body, Top, 5mm	14.50	19.00	14.76	19.01	0.685
7	*SAR1 vs SAR2	WLAN	5GHz	Sub2(F)	1	122	5610	802.11ac80 MCS0	Head, Right Tilt, 0mm	10.50	17.00	9.90	16.95	0.212
			2.4GHz	Sub3(G)+ Sub4(H)	1	11	2462	802.11b 1Mbps	Head, Left Tilt, 0mm	13.50	19.00	13.88	19.01	0.466

*Total time-averaged normalized RF Exposure limit

Note:

1. The device uncertainty of *Pmax* is +1dB/-1.5dB as provided by manufacturer.

The report shall not be (partly) reproduced except in full without approval of the laboratory.

7.3 Time-varying Tx power measurement results

The measurement setup is shown in Figures 7-1(a). The purpose of the time-varying Tx power measurement is to demonstrate the effectiveness of power limiting enforcement and that the time-averaged Tx power when represented in time-averaged 1gSAR or 10gSAR values does not exceed FCC limit as shown in Eq. (1a) and (1b), rewritten below:

$$1g_or_10gSAR(t) = \frac{conducted_Tx_power(t)}{conducted_Tx_power_P_{limit}} * 1g_or_10gSAR_P_{limit} \qquad (1a)$$

$$\frac{\frac{1}{T_{SAR}}\int_{t-T_{SAR}}^{t} 1g_or_10gSAR(t)dt}{FCC\ SAR\ limit} \leq 1 \qquad (1b)$$

where, conducted_Tx_Power(t), conducted_Tx_Plimit, and 1g_or_10g SAR_Plimit$1g_or_10gSAR_Plimit$ correspond to the measured instantaneous conducted Tx power, measured conducted Tx power at *Plimit*, and measured *1gSAR* and *10gSAR* values at *Plimit* reported in Part 1 test (listed in Table6-2 of this report as well).

Following the test procedure in Section 5.3, the conducted Tx power measurement for all selected configurations are reported in this section. In all the conducted Tx power plots, the dotted line represents the requested power by callbox (test sequence 1 or test sequence 2), the blue curve represents the instantaneous conducted Tx power measured using power meter, the green curve represents time-averaged power and red line represents the conducted power limit that corresponds to FCC limit of 1.6 W/kg for 1gSAR or 4.0 W/kg for 10gSAR.

Similarly, in all the 1g or 10gSAR plots (when converted using Eq. (1a)), the green curve represents the 30s/30s time averaged 1gSAR or 10gSAR value calculated based on instantaneous 1gSAR or 10gSAR; and the red line limit represents the FCC limit of 1.6 W/kg for 1gSAR or 4.0 W/kg for 10gSAR.

Time-varying Tx power measurements were conducted on test cases #1 ~ #2 in Table 7-1, by generating test sequence 1 given in Appendix A using measured *Plimit* and measured *Pmax* for each of these test cases. Measurement results for test cases #1 ~ #2 are given in Sections 7.3.1 - 7.3.3

The report shall not be (partly) reproduced except in full without approval of the laboratory.

7.3.1 WLAN 2.4 GHz (test case 1 in Table 7-1)

Conducted Plot No. 1

Test result for test sequence 1

Above time-averaged conducted Tx power is converted/calculated into time-averaged 1gSAR using Equation (1a) and plotted below to demonstrate that the time-averaged 1gSAR versus time does not exceed the FCC limit of 1.6 W/kg for 1gSAR:

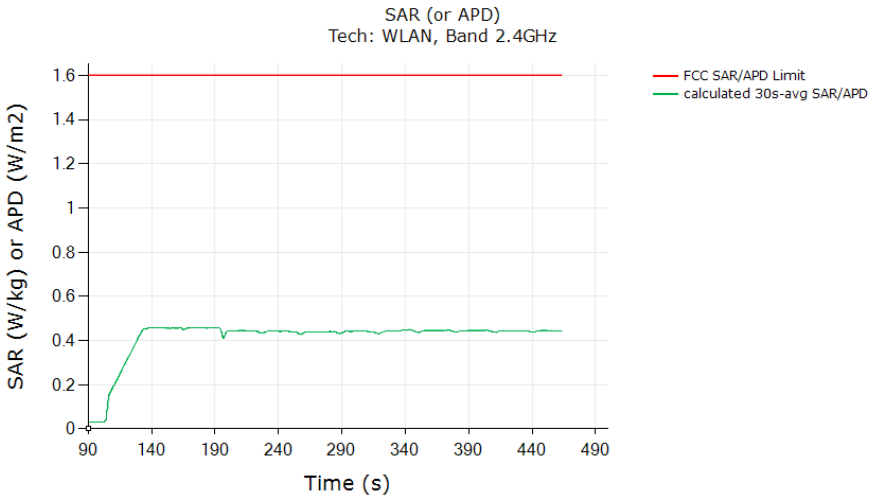

FCC 1g SAR Limit [W/kg]	1.6 W/kg
Max 30s-time averaged 1gSAR (green curve)	0.457W/kg
Validated: Max time averaged SAR (green curve) is within 1dB device uncertainty of measured SAR at *Plimit* (last column in Table 7-1).	

The report shall not be (partly) reproduced except in full without approval of the laboratory.

7.3.2 WLAN 5GHz (test case 2 in Table 7-1)

Conducted Plot No. 2

Test result for test sequence 1

Above time-averaged conducted Tx power is converted/calculated into time-averaged 1gSAR using Equation (1a) and plotted below to demonstrate that the time-averaged 1gSAR versus time does not exceed the FCC limit of 1.6 W/kg for 1gSAR:

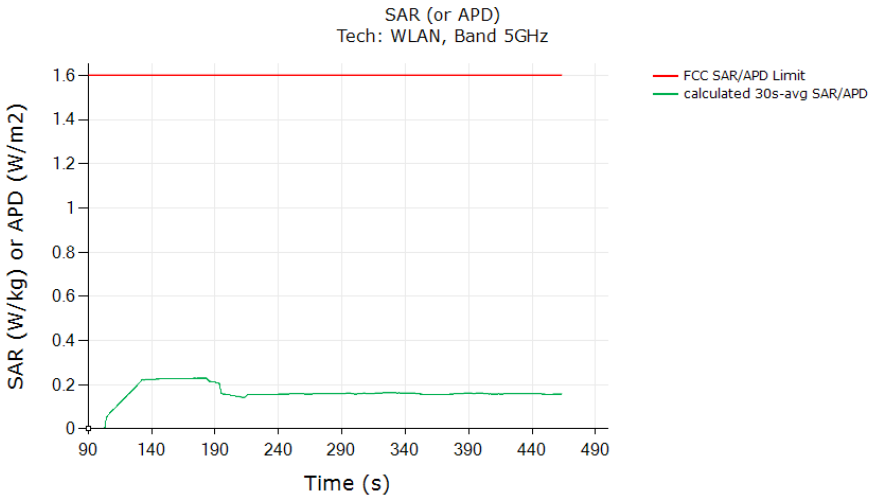

FCC 1g SAR Limit [W/kg]	1.6 W/kg
Max 30s-time averaged 1gSAR (green curve)	0.229 W/kg
Validated: Max time averaged SAR (green curve) is within 1dB device uncertainty of measured SAR at *Plimit* (last column in Table 7-1).	

The report shall not be (partly) reproduced except in full without approval of the laboratory.

7.3.3 WLAN 6GHz (test case 3 in Table 7-1)

Conducted Plot No. 3

Test result for test sequence 1

Above time-averaged conducted Tx power is converted/calculated into time-averaged 1gSAR using Equation (1a) and plotted below to demonstrate that the time-averaged 1gSAR versus time does not exceed the FCC limit of 1.6 W/kg for 1gSAR:

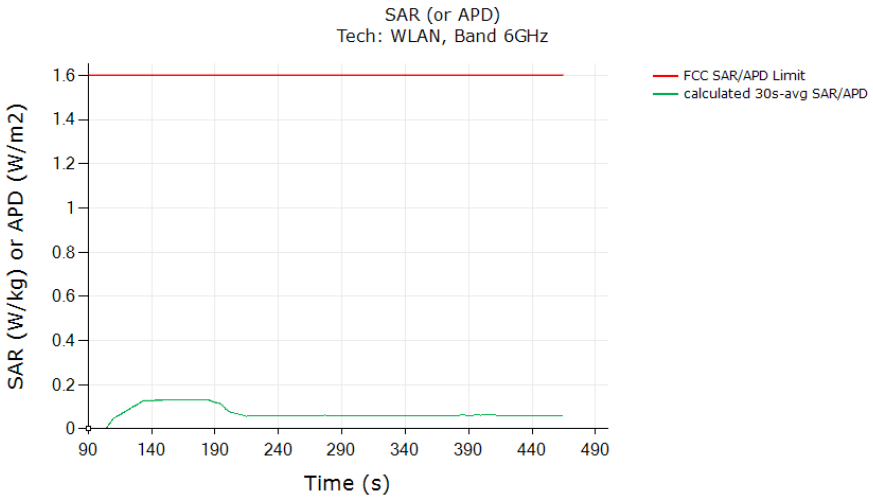

FCC 1g SAR Limit [W/kg]	1.6 W/kg
Max 30s-time averaged 1gSAR (green curve)	0.132 W/kg
Validated: Max time averaged SAR (green curve) is within 1dB device uncertainty of measured SAR at *Plimit* (last column in Table 7-1).	

The report shall not be (partly) reproduced except in full without approval of the laboratory.

7.4 Change in Antenna/Band Test results (test case 4 in Table 7-1)

This test was conducted with callbox requesting maximum power, and with Antenna/Bnad switch from WLAN 6 GHz, DSI = 1 (RCV On) to WLAN 2.4GHz, DSI =1 (RCV On). Following procedure detailed in Section 5.3 3)b, 5.3 4)c, and using the measurement setup shown in Figure 7-1(b).

the technology/band switch was performed when the EUT is transmitting at Preserve level as shown in the plot below

Conducted Plot No. 4

Test result for change in technology/band:

All the time-averaged conducted Tx power measurement results were converted into time-averaged normalized SAR values using Equation (4a), (4b) and (4c), and plotted below to demonstrate that the time-averaged normalized SAR versus time does not exceed the normalized FCC limit of 1.0:

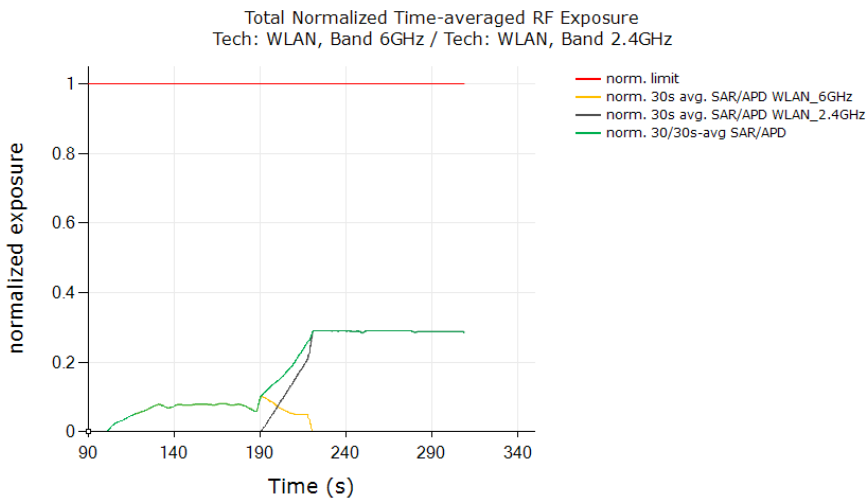

FCC normalized SAR limit	1.0
Max 30s-time averaged normalized SAR(green curve)	0.291
Validated:	

The test result validated the continuity of power limiting in technology/band switch scenario.

The report shall not be (partly) reproduced except in full without approval of the laboratory.

7.5 Change in Antenna/Band Test results (test case 5 in Table 7-1)

This test was conducted with callbox requesting maximum power, and with Antenna/Bnad switch from WLAN 6 GHz, DSI = 1 (RCV On) to WLAN 5 GHz, DSI =1 (RCV On). Following procedure detailed in

Section 5.3 4)b, 5.3 4)c, and using the measurement setup shown in Figure 7-1(b).

the technology/band switch was performed when the EUT is transmitting at Preserve level as shown in the plot below

Conducted Plot No. 5

Test result for change in technology/band:

All the time-averaged conducted Tx power measurement results were converted into time-averaged normalized SAR values using Equation (4a), (4b) and (4c), and plotted below to demonstrate that the time-averaged normalized SAR versus time does not exceed the normalized FCC limit of 1.0:

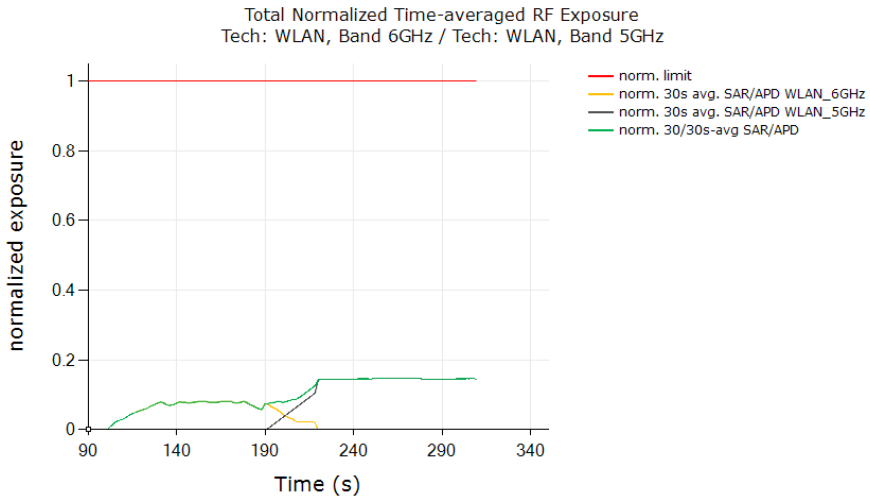

FCC normalized SAR limit	1.0
Max 30s-time averaged normalized SAR(green curve)	0.147
Validated:	

The test result validated the continuity of power limiting in technology/band switch scenario.

The report shall not be (partly) reproduced except in full without approval of the laboratory.

7.6 Change in DSI test results (test case 6 in Table 7-1)

This test was conducted with callbox requesting maximum power, and with DSI switch from WLAN 2.4 GHz DSI = 1 (RCV ON) to DSI = 0 (Free). Following procedure detailed in Section 5.3 4)c, using the measurement setup shown in Figure 7-1(a).

Conducted Plot No.6

Test result for change in DSI:

All the time-averaged conducted Tx power measurement results were converted into time-averaged normalized SAR values using Equation (4a), (4b) and (4c), and plotted below to demonstrate that the time-averaged normalized SAR versus time does not exceed the normalized FCC limit of 1.0:

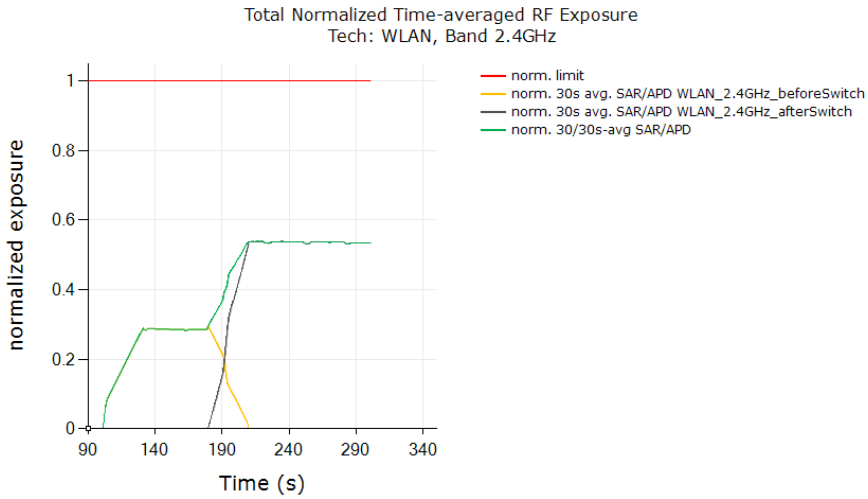

FCC normalized SAR limit	1.0
Max 30s-time averaged normalized SAR(green curve)	0.539
Validated:	

The report shall not be (partly) reproduced except in full without approval of the laboratory.

7.7 Switch in SAR exposure test results (test case 7 in Table 7-1)

This test was conducted with callbox set to request maximum duty cycle, and with the EUT in WLAN 2.4GHz + WLAN 5GHz. Here, WLAN 2.4GHz Ant Sub3+Sub4, DSI = 1(RCV On) (30s window, Plimit = 13.5 dBm, Pmax = 19.0 dBm, measured Plimit = 14.01 dBm), and WLAN 5GHz Ant Sub2+Sub4, DSI = 1(RCV On) (30s window, *Plimit* = 10.5 dBm, *Pmax* = 17.0 dBm, measured *Plimit* = 9.58 dBm). Following procedure detailed in Section 5.3.4.e, and using the measurement setup shown in Figure 7-1(b) The WLAN DBS SAR exposure switch measurement is performed with the EUT in various SAR exposure scenarios.

Conducted Plot No.7

All the conducted Tx power measurement results were converted into time-averaged normalized SAR values using Equation (7a), (7b) and (7c), and plotted below to demonstrate that the time-averaged normalized SAR versus time does not exceed the FCC limit of 1 unit. Equation (7a) is used to convert the WLAN Tx power of device to obtain 30s-averaged normalized SAR in WLAN 5GHz, Ant Sub2+Sub4 as shown in black curve. Similarly, equation (7b) is used to obtain 30s-averaged normalized SAR in WLAN 2.4GHz, Ant Sub3+Sub4 as shown in orange curve. Equation (7c) is used to obtain total time-averaged normalized SAR as shown in green curve (i.e., sum of black and orange curves).

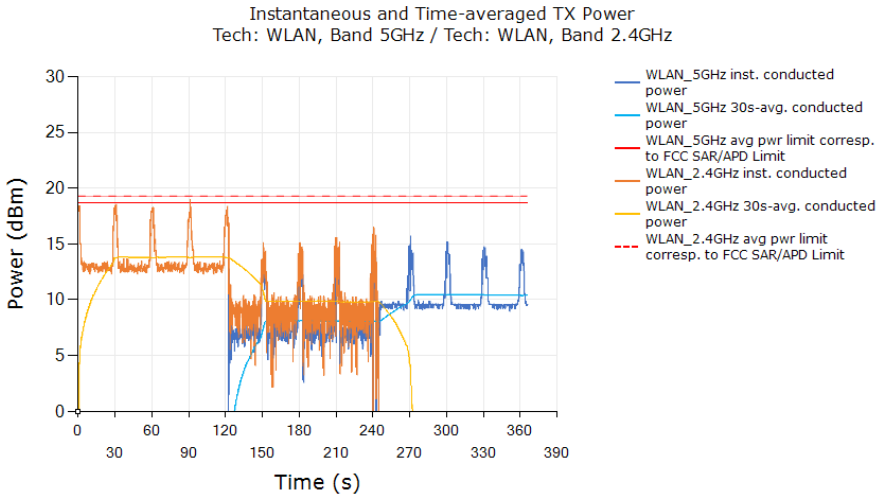

FCC normalized total exposure limit	1.0
Max Norm. Total time-avg. SAR (green curve) (green curve)	0.288
Validated:	

In this test, the total time-averaged normalized RF exposure (green curve) did not exceed normalized limit of 1.0 at all times, the above test result validated the continuity of power limiting in SAR exposure switch scenario.

The report shall not be (partly) reproduced except in full without approval of the laboratory.

8. Equipment List

Manufacturer	Type / Model	S/N	Calib. Date	Calib.Interval	Calib.Due
R&S	Wireless Communication Test Set/ CMW500	167916	09/11/2024	Annual	09/11/2025
R&S	Radio Communication Tester/ CMX500	100325	10/14/2024	Annual	10/14/2025
R&S	Power Sensor/NRP8S	104617	06/25/2024	Annual	06/25/2025
R&S	Power Sensor/NRP8S	104636	06/25/2024	Annual	06/25/2025
Narda	Directional Coupler/4216-10	01489	11/22/2024	Annual	11/22/2025
Narda	Directional Coupler/4216-10	2090710	06/25/2024	Annual	06/25/2025
WEINWRIGHT INSTRUMENTS	High Pass Filter/WHKX12-2805	61	02/19/2025	Annual	02/19/2026
MICRO LAB	LP Filter / LA-30N	-	09/11/2024	Annual	09/11/2025
RFcorea	2Way Spliter	473841	12/09/2024	Annual	12/09/2025
RFcorea	2Way Spliter	473842	12/09/2024	Annual	12/09/2025

The report shall not be (partly) reproduced except in full without approval of the laboratory.

9. Conclusion

Qualcomm FastConnect TAS feature employed in Samsung Mobile Phone (FCC A3LSMF766B) has been validated through the conducted/radiated power measurement.

As demonstrated in this report, the power limiting enforcement is effective and the totalnormalized time-averaged RF exposure does not exceed 1.0 for all the transmission scenarios described in Section 4.

Therefore, the EUT complies with FCC RF exposure requirement.
.

The report shall not be (partly) reproduced except in full without approval of the laboratory.

Appendix A: Test Sequences

1. Test sequence is generated based on below parameters of the EUT:

a. Measured maximum power (P_{max})

b. Measured Tx_power_at_SAR_design_target (P_{limit})

c. Reserve_power_margin (dB)

$P_{reserve}$ (dBm) = measured P_{limit}(dBm) – Reserve_power_margin (dB)

If only WLAN technology is managed under FastConnect TAS: Reserve_power_margin (dB) = –10*log10(TOTAL_MIN_RES_RATIO)

d. FCC SAR_time_window (100s for f < 3GHz, 60s for 3GHz < f ≤ 6GHz and 30s for 6GHz < f ≤ 10GHs)

2. Test Sequence 1 Waveform:

Based on the parameters above, the Test Sequence 1 is generated with one transition between high and low Tx powers. Here, high power = Pmax; low power = Pmax/2, and the transition occurs after 80 seconds at high power Pmax. As long as the power enforcement is taking into effective during one 100s/60s time window, the validation test with this defined test sequence 1 is valid, otherwise, select other radio configuration (band/DSI within the same technology group) having lower Plimit for this test. The Test sequence 1 waveform is shown below:

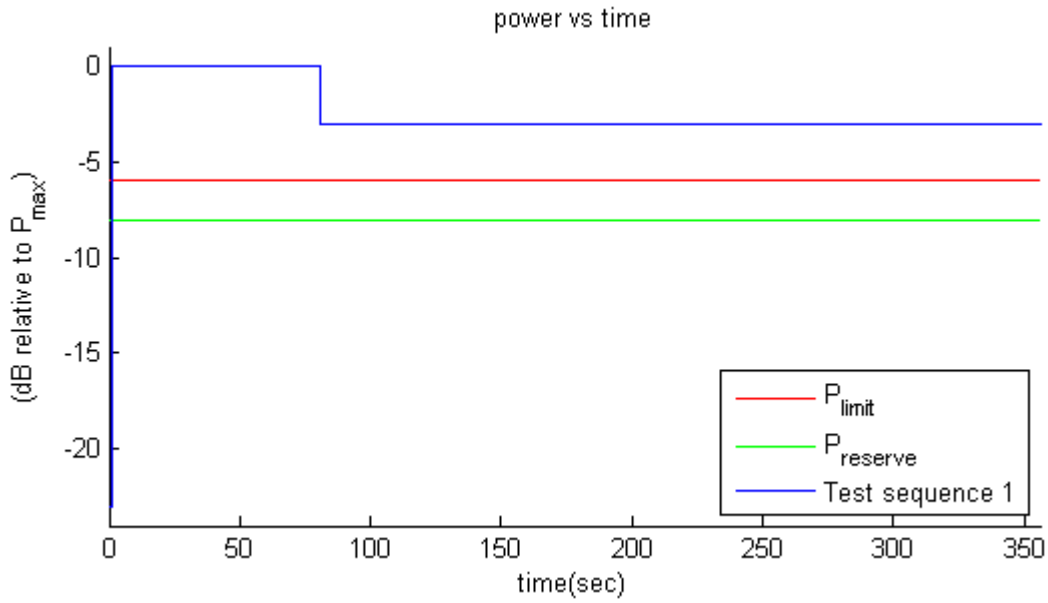

Figure 1 Test sequence 1 waveform

The report shall not be (partly) reproduced except in full without approval of the laboratory.

Appendix B: WLAN TAS Test Setup Photos

Please refer to test setup photo file no. as follows:

Report No.
HCT-SR-2505-FC010-P

The report shall not be (partly) reproduced except in full without approval of the laboratory.