TEST REPORT

FCC DFS Test for SM-F766U
Certification

APPLICANT
SAMSUNG Electronics Co., Ltd.

REPORT NO.
HCT-RF-2504-FC033-R1

DATE OF ISSUE
May 23, 2025

Tested by
Jin Mo Sung

Technical Manager
Jong Seok Lee

HCT CO., LTD.
BongJai Huh / CEO

The report shall not be (partly) reproduced except in full without approval of the laboratory.
HCT CO., LTD. 2-6, 73, 74, Seoicheon-ro 578beon-gil, Majang-myeon, Icheon-si, Gyeonggi-do, Republic of Korea Tel. +82 31 645 6300 Fax. +82 31 645 6401

HCT CO.,LTD.
2-6, 73, 74, Seoicheon-ro 578beon-gil, Majang-myeon, Icheon-si, Gyeonggi-do, Republic of Korea
Tel. +82 31 645 6300 Fax. +82 31 645 6401

TEST REPORT

REPORT NO.
HCT-RF-2504-FC033-R1

DATE OF ISSUE
May 23, 2025

Additional Model
SM-F766U1

Applicant	SAMSUNG Electronics Co., Ltd. 129, Samsung-ro, Yeongtong-gu, Suwon-si, Gyeonggi-do, 16677, Rep. of Korea
Product Name Model Name	Mobile Phone SM-F766U
FCC ID	A3LSMF766U
Date of Test	February 23, 2025 ~ April 22, 2025
Test Results	PASS
FCC Classification	Unlicensed National Information Infrastructure(NII)
Test Standard Used	FCC Rule Part(s): Part 15.407(DFS)
Location of Test	■ Permanent Testing Lab ☐ On Site Testing Lab (Address: 74, Seoicheon-ro 578beon-gil, Majang-myeon, Icheon-si, Gyeonggi-do, Republic of Korea)

The report shall not be (partly) reproduced except in full without approval of the laboratory.

REVISION HISTORY

The revision history for this test report is shown in table.

Revision No.	Date of Issue	Description
0	April 22, 2025	Initial Release
1	May 23, 2025	Revised the Power Supply Voltage. (DC 3.88 V → DC 3.90 V)

Notice

Content
Engineering Statement: The measurements shown in this report were made in accordance with the procedures indicated, and the emissions from this equipment were found to be within the limits applicable. I assume full responsibility for the accuracy and completeness of these measurements, and for the qualifications of all persons taking them. It is further stated that upon the basis of the measurements made, the equipment tested is capable of operation in accordance with the requirements of the FCC Rules under normal use and maintenance. The results shown in this test report only apply to the sample(s), as received, provided by the applicant, unless otherwise stated. The test results have only been applied with the test methods required by the standard(s). The laboratory is not accredited for the test results marked *. Information provided by the applicant is marked **. Test results provided by external providers are marked ***. When confirmation of authenticity of this test report is required, please contact www.hct.co.kr The test results in this test report are not associated with the ((KS Q) ISO/IEC 17025) accreditation by KOLAS (Korea Laboratory Accreditation Scheme) / A2LA (American Association for Laboratory Accreditation) that are under the ILAC (International Laboratory Accreditation Cooperation) Mutual Recognition Agreement (MRA).

The report shall not be (partly) reproduced except in full without approval of the laboratory.

CONTENTS

1. GENERAL INFORMATION 5
EUT DESCRIPTION 5
Max. RF Output Power 6
2. SCOPE 7
3. INSTRUMENT CALIBRATION 7
4. FACILITIES AND ACCREDITATIONS 7
FACILITIES 7
EQUIPMENT 7
5. SUMMARY OF TEST RESULTS 8
6. DESCRIPTION OF DYNAMIC FREQUENCY SELECTION TEST 9
6.1 Requirements 9
6.2 Limit 10
6.3 DFS detection threshold values 11
6.4 DFS test signals 12
6.5 Test and measurement system 13
6.6 TEST RESULT 15
7. LIST OF TEST EQUIPMENT 19
8. ANNEX A_ TEST SETUP PHOTO 20

The report shall not be (partly) reproduced except in full without approval of the laboratory.

1. GENERAL INFORMATION

EUT DESCRIPTION

Model	SM-F766U
Additional Model	SM-F766U1
EUT Type	Mobile Phone
Power Supply	DC 3.90 V
Modulation Type	OFDM : 802.11a, 802.11n, 802.11ac OFDMA : 802.11ax, 802.11be
Operating mode	Slave Device without radar detection
Frequency Range	5250 – 5350 MHz (UNII-2A Band) 5470 – 5725 MHz (UNII-2C Band)
Test Procedure	FCC KDB 905462 D02 v02
Architecture	802.11a/n/ac/ax/be
Channel Bandwidth(MHz)	20, 40, 80, 160
Channel puncturing	Not Supported
Serial number	Conducted : R3CY30SC51D

Note:

1. TPC is not required since the maximum EIRP is less than 500 mW(27 dBm).
2. WLAN traffic that meets or exceeds the minimum required loading was generated by transferring a data stream from the controller/server PC to the EUT using Streaming Video.
3. Overview of Master Device

: The Master Device is a ASUS Access Point, FCC ID: MSQ-RTAXJF00.

The rated output power of the Master unit is > 23 dBm (EIRP). Therefore the required interference threshold level is –64 dBm.

The calibrated radiated DFS Detection Threshold level is set to –64 dBm.

The tested level is lower than the required level hence it provides a margin to the limit

The report shall not be (partly) reproduced except in full without approval of the laboratory.

Max. RF Output Power

Band	Mode	Ant1 Power		Ant2 Power		MIMO_CDD(Ant1+Ant2)	
		(dBm)	(W)	(dBm)	(W)	(dBm)	(W)
UNII2A	802.11a	17.51	0.056	16.32	0.043	19.97	0.099
	802.11n (HT20)	17.57	0.057	16.38	0.043	20.03	0.101
	802.11n (HT40)	17.93	0.062	17.29	0.054	20.63	0.116
	802.11ac (VHT20)	17.56	0.057	16.39	0.044	20.03	0.101
	802.11ac (VHT40)	17.95	0.062	17.32	0.054	20.66	0.116
	802.11ac (VHT80)	16.33	0.043	15.37	0.034	18.89	0.077
	802.11ac (VHT160)	15.80	0.038	15.65	0.037	18.74	0.075
	802.11be(EHT20)	17.69	0.059	16.65	0.046	20.21	0.105
	802.11be(EHT40)	17.48	0.056	16.55	0.045	20.05	0.101
	802.11be(EHT80)	17.80	0.060	16.57	0.045	20.24	0.106
	802.11be(EHT160)	17.79	0.060	17.18	0.052	20.51	0.112
UNII2C	802.11a	17.12	0.051	16.62	0.046	19.89	0.097
	802.11n (HT20)	17.21	0.053	16.70	0.047	19.97	0.099
	802.11n (HT40)	17.58	0.057	17.71	0.059	20.66	0.116
	802.11ac (VHT20)	17.19	0.052	16.67	0.046	19.95	0.099
	802.11ac (VHT40)	17.62	0.058	17.70	0.059	20.67	0.117
	802.11ac (VHT80)	17.34	0.054	17.56	0.057	20.46	0.111
	802.11ac (VHT160)	15.76	0.038	15.26	0.034	18.53	0.071
	802.11be(EHT20)	17.48	0.056	16.88	0.049	20.20	0.105
	802.11be(EHT40)	17.26	0.053	17.11	0.051	20.20	0.105
	802.11be(EHT80)	17.49	0.056	17.11	0.051	20.32	0.108
	802.11be(EHT160)	17.60	0.057	17.00	0.050	20.32	0.108

The report shall not be (partly) reproduced except in full without approval of the laboratory.

2. SCOPE

This report has been prepared to demonstrate compliance with the requirements for Dynamic Frequency Selection(DFS) as stated in KDB 905462 D02 v02. Testing was performed in accordance with the measurement procedure described in FCC KDB 905462 D02 v02.

3. INSTRUMENT CALIBRATION

The measuring equipment, which was utilized in performing the tests documented herein, has been calibrated in accordance with the manufacturer's recommendations for utilizing calibration equipment's, which is traceable to recognized national standards.
Especially, all antenna for measurement is calibrated in accordance with the requirements of C63.5 (Version : 2017).

4. FACILITIES AND ACCREDITATIONS

FACILITIES

The SAC(Semi-Anechoic Chamber) and conducted measurement facility used to collect the radiated data are located at the 74, Seoicheon-ro 578beon-gil, Majang-myeon, Icheon-si, Gyeonggi-do, 17383, Rep. of KOREA. The site is constructed in conformance with the requirements of ANSI C63.4. (Version :2014) and CISPR Publication 22.
Detailed description of test facility was submitted to the Commission and accepted dated March 11, 2024 (Registration Number: KR0032).

EQUIPMENT

Radiated emissions are measured with one or more of the following types of Linearly polarized antennas: tuned dipole, bi-conical, log periodic, bi-log, and/or ridged waveguide, horn. Spectrum analyzers with pre-selectors and quasi-peak detectors are used to perform radiated measurements. Conducted emissions are measured with Line Impedance Stabilization Networks and EMI Test Receivers. Calibrated wideband preamplifiers, coaxial cables, and coaxial attenuators are also used for making measurements.
All receiving equipment conforms to CISPR Publication 16-1, "Radio Interference Measuring Apparatus and Measurement Methods."

The report shall not be (partly) reproduced except in full without approval of the laboratory.

5. SUMMARY OF TEST RESULTS

Band	Parameter	Limit	Result
UNII-2A	Channel Move Time	10 seconds	NT[Note2]
	Channel Closing Transmission Time	200 ms + aggregate of 60 ms over remaining 10 second period	NT[Note2]
	Non-occupancy Period	30 minutes	NT[Note2]
UNII-2C	Channel Move Time	10 seconds	PASS
	Channel Closing Transmission Time	200 ms + aggregate of 60 ms over remaining 10 second period	PASS
	Non-occupancy Period	30 minutes	PASS

Note:

1. NT = Not Tested, NA = Not Applicable
2. The KDB905462 D02 v02 : One of the frequencies (widest BW) between UNII-2A and UNII-2C was tested.

Therefore, We performed the only UNII-2C test.

The report shall not be (partly) reproduced except in full without approval of the laboratory.

6. DESCRIPTION OF DYNAMIC FREQUENCY SELECTION TEST

6.1 Requirements

KDB905462 D02 v02(04/08/2016) the following are the requirements for Client Devices:

a) A Client Device will not transmit before having received appropriate control signals from a Master Device.

b) A Client Device will stop all its transmissions whenever instructed by a Master Device to which it is associated and will meet the Channel Move Time and Channel Closing Transmission Time requirements.
The Client Device will not resume any transmissions until it has again received control signals from a Master Device.

c) If a Client Device is performing In-Service Monitoring and detects a Radar Waveform above the DFS Detection Threshold, it will inform the Master Device. This is equivalent to the Master Device detecting the Radar Waveform and d) through f) of section 5.1.1(KDB905462 D02 v02) apply.

d) Irrespective of Client Device or Master Device detection the Channel Move Time and Channel Closing Transmission Time requirements remain the same.

e) The client test frequency must be monitored to ensure no transmission of any type has occurred for 30 minutes. Note: If the client moves with the master, the device is considered compliant if nothing appears in the client non-occupancy period test. For devices that shut down (rather than moving channels), no beacons should appear.

The report shall not be (partly) reproduced except in full without approval of the laboratory.

6.2 Limit

Parameter	Value
Non-occupancy period	Minimum 30 minutes
Channel Availability Check Time	60 seconds
Channel Move Time	10 seconds See Note 1.
Channel Closing Transmission Time	200 milliseconds + an Aggregate of 60 milliseconds over Remaining 10 second period. See Notes 1 and 2.
U-NII Detection Bandwidth	Minimum 100 % of the U-NII 99 % transmission Power bandwidth. See Note 3.

Note 1:

Channel Move Time and the Channel Closing Transmission Time should be performed with Radar Type 0. The measurement timing begins at the end of the Radar Type 0 burst.

Note 2:

The Channel Closing Transmission Time is comprised of 200 milliseconds starting at the beginning of
The Channel Move Time plus any additional intermittent control signals required to facilitate a Channel move
(an aggregate of 60 milliseconds) during the remainder of the 10 second period. The aggregate duration
of control signals will not count quiet periods in between transmissions.

Note3:

During the U-NII Detection Bandwidth detection test, radar type 0 should be used.
For each frequency step the minimum percentage of detection is 90 %. Measurements are performed
With no data traffic.

The report shall not be (partly) reproduced except in full without approval of the laboratory.

6.3 DFS detection threshold values

The DFS detection thresholds are defined for Master devices and Client Devices with In-service monitoring. These detection thresholds are listed in the following table.

Maximum Transmit Power	Value (See Notes 1 and 2)
≥ 200 milliwatt	-64 dBm
< 200 milliwatt	-62 dBm

Note 1:
This is the level at the input of the receiver assuming a 0 dBi receive antenna.

Note 2:
Throughout these test procedures an additional 1 dB has been added to the amplitude of the test transmission waveforms to account for variations in measurement equipment. This will ensure that the test signal is at or above the detection threshold level to trigger a DFS response.

The report shall not be (partly) reproduced except in full without approval of the laboratory.

6.4 DFS test signals

As the EUT is a Client Device with no Radar Detection only one type radar pulse is required for the testing. Radar Pulse type 0 was used in the evaluation of the Client device for the purpose of measuring the Channel Move Time and the Channel Closing Transmission Time.

Radar Type	Pulse Width (μsec)	PRI (μsec)	Number Of Pulses	Minimum Percentage of Successful Detection	Minimum Number of Trials
0	1	1428	18	See Note 1	See Note 1
1	1	Test A: 15 unique PRI values Randomly selected From the list of 23 PRI values in Table 5a	$\text{Roundup}\left\{\left[\frac{1}{360}\right], \left[\frac{19\cdot 10^6}{\text{PRI}_{\mu sec}}\right]\right\}$	60%	30
		Test B: 15 unique PRI values Randomly selected within the range of 518-3066 μ sec, with a minimum increment of 1 μ sec, excluding PRI values selected in Test A			
2	1-5	150-230	23-29	60%	30
3	6-10	200-500	16-18	60%	30
4	11-20	200-500	12-16	60%	30
Aggregate (Radar Types 1-4)				80%	120

Note1:
Short pulse Radar Type 0 should be used for the detection bandwidth test, channel move time, and channel closing time tests.

The report shall not be (partly) reproduced except in full without approval of the laboratory.

6.5 Test and measurement system

General Test Setup Procedure:

1. Connect FCC approved Master AP to a network, via wired Ethernet, that allows connection to an FTP server.
2. Associate the EUT with the Master AP.
3. Launch the FTP application on the EUT.
4. Connect to the FTP server application to the FTP server hosting the file
5. Initiate an FTP download of the file from the host.
6. Monitor the channel loading during transfer.
7. Reduce the maximum allowed data rate for the Master AP, using the AP's GUI interface.
8. Repeat steps 4-6 until the channel loading is as close to 20 % as possible.
9. Record the data rate setting on the Master AP and the channel loading.
10. While the system is performing an FTP transfer using the settings form item 8 above, perform the Channel Closing Transmission Time and Channel Move Time Measurements as required by KDB905462 D02 v02 using a conducted test.

System calibrations

A-50-ohm load is connected in place of the spectrum analyzer, and the spectrum analyzer is connected to a coaxial cable. The signal generator is set to CW mode. The amplitude of the signal generator is adjusted to yield a level of - 62 dBm as measured on the spectrum analyzer.

Without changing any of the instrument settings, the spectrum analyzer is reconnected to the common port of the spectrum analyzer combiner or divider.

The spectrum analyzer displays the level of the signal generator higher than the client TX level. Because we can not search the signal generator in the spectrum analyzer when the signal generator level is - 62 dBm. The spectrum analyzer will still indicate the level higher than the client TX level.

The report shall not be (partly) reproduced except in full without approval of the laboratory.

Procedure

The KDB905462 D02 v02 describes a radiated test setup and a conducted test setup.
A Conducted test setup was used for this testing. Figure 7-1 shows the typical test setup.
One of the frequencies (widest BW) between UNII-2A and UNII-2C was tested.

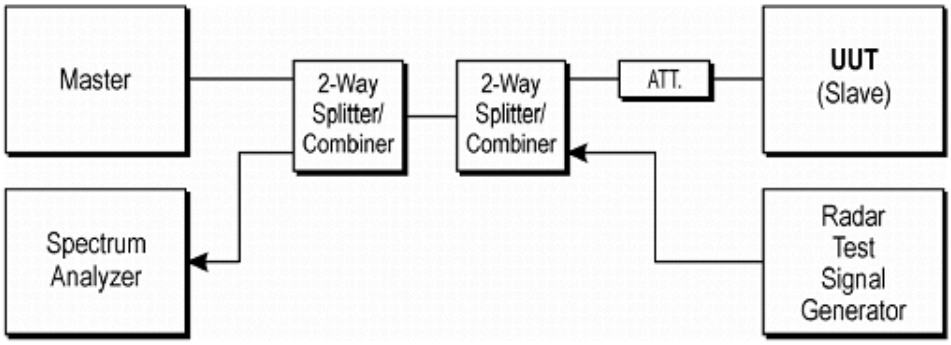

Figure 7-1. Test Setup

1. The radar pulse generator is setup to provide a pulse at the frequency that the Master and Client are operating. A Type 0 radar pulse with a 1 µs pulse width and a 1428 µs PRI is used for the testing.

2. The vector signal generator is adjusted to provide the radar burst (18 pulses) at a level of approximately -62 dBm at the antenna of the Master device.

3. The Client Device (EUT) is set up per the diagram in Figure 7-1 and communications between the Master device and the Client is established.

4. The MPEG file specified by the FCC (*"6½ Magic Hours"*) is streamed from the "file computer" through the Master to the Slave Device and played in full motion video using Media Player Classic Ver.6.4.8.6 in order to properly load the network.

5. The spectrum analyzer is set to record about 15 sec window to any transmissions occurring up to and after 10 sec.

6. The system is again setup and the monitoring time is shortened in order to capture the Channel Closing Transmission Time. This time is measured to insure that the Client ceases transmission within 200 ms and the aggregate of emissions occurring after 200 ms up to 10 sec do not exceed 60 ms.
   (Note: the channel may be different since the Master and Client have changed channels due to the detection of the initial radar pulse.)

7. After the initial radar burst the channel is monitored for 30 minutes to insure no transmissions or beacons occur. A second monitoring setup is used to verify that the Master and Client have both moved to different channels.

The report shall not be (partly) reproduced except in full without approval of the laboratory.

6.6 TEST RESULT

Type0 : PRI

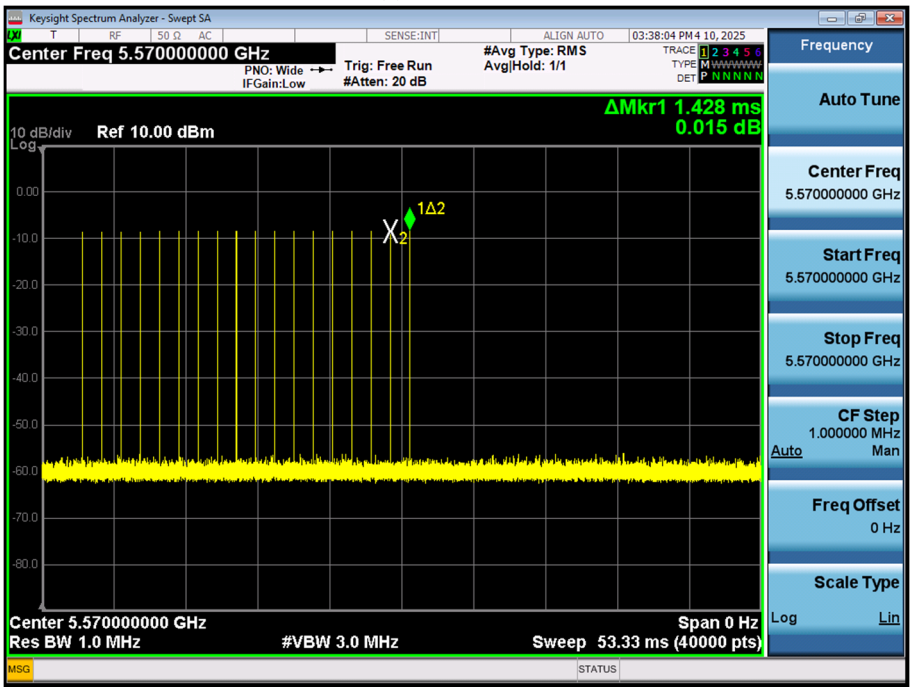

Type0 : Radar Pulse Number

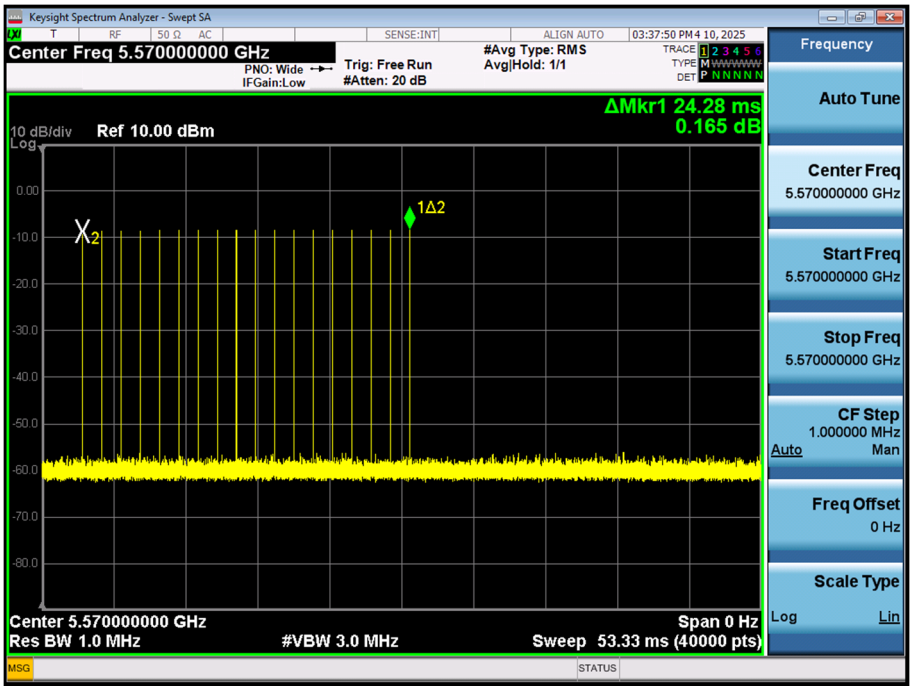

Marker Descriptions:

Number of Pulse Form : 18

The report shall not be (partly) reproduced except in full without approval of the laboratory.

Time Display, Non WLAN Channel Traffic

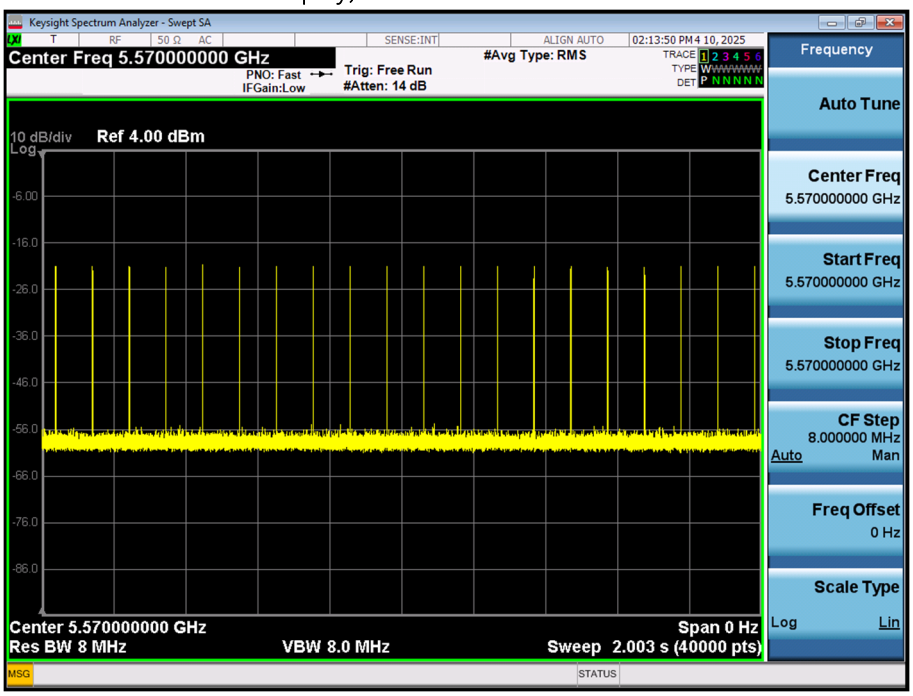

Time Display, WLAN Channel Traffic (Streaming Video)

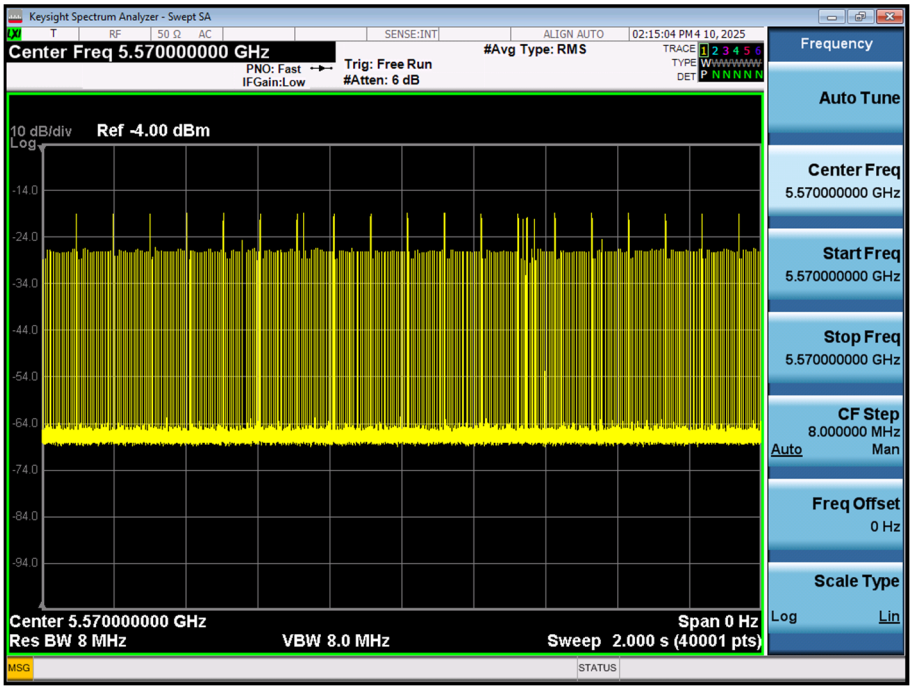

The report shall not be (partly) reproduced except in full without approval of the laboratory.

Channel Move Time & Channel Closing Transmission Time

Note:

1. Test BW : 802.11be(EHT160)
2. Test Channel : 114 Channel
3. Channel Move Time : 0.937159 s (Limit : 10 s)
4. Channel Closing Transmission Time, Aggregate Time After 200 ms : 0.003703 s (Limit : 60 ms)

The report shall not be (partly) reproduced except in full without approval of the laboratory.

Non-occupancy Period – Monitoring live time spectrum analyzer – Elapse time 30 minutes

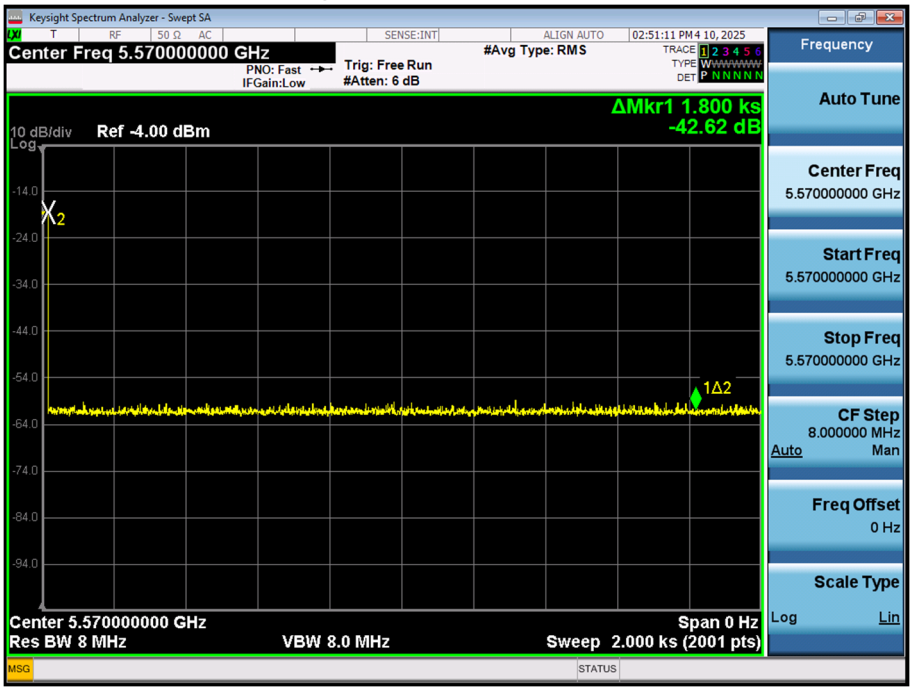

The report shall not be (partly) reproduced except in full without approval of the laboratory.

7. LIST OF TEST EQUIPMENT

Equipment	Model	Manufacturer	Serial No.	Due to Calibration	Calibration Interval
Wireless AP	GT-AXE11000	ASUS	M6IAJF201782 (FCC ID : MSQ-RTAXJF00)	N/A	N/A
DFS Measurement System(S/G)	PXI	ADLINK	302581/735	02/05/2026	Annual
DFS Measurement System(S/A)	PXI	ADLINK	303582/113	02/05/2026	Annual
4 Way Power Divider	4456-4	NARDA	01640	05/02/2025	Annual
Step Attenuator(70 dB)	8495B	Agilent	MY41110293	08/01/2025	Annual
Step Attenuator(11 dB)	8494B	HP	2812A19007	08/01/2025	Annual
Signal Analyzer	N9030A	Keysight	MY55410508	08/23/2025	Annual

The report shall not be (partly) reproduced except in full without approval of the laboratory.

8. ANNEX A_ TEST SETUP PHOTO

Please refer to test setup photo file no. as follows;

No.	Description
1	HCT-RF-2504-FC033-P

The report shall not be (partly) reproduced except in full without approval of the laboratory.