SAMSUNG

Unlicensed Band Antenna Gain

Model: SM-F776B

FCC ID: A3LSMF776B

BT/WIFI #1_2.4GHz (SUB3), WIFI Ant#1_5 / 6 GHz (SUB2)

Freq. [Hz]	Peak. [dBi]
2,400,000,000 Hz	-6.50 dBi
2,412,000,000 Hz	-6.09 dBi
2,437,000,000 Hz	-6.00 dBi
2,442,000,000 Hz	-6.20 dBi
2,450,000,000 Hz	-6.30 dBi
2,462,000,000 Hz	-5.90 dBi
2,472,000,000 Hz	-6.10 dBi
2,484,000,000 Hz	-6.20 dBi
2,500,000,000 Hz	-6.01 dBi
5,150,000,000 Hz	-5.04 dBi
5,200,000,000 Hz	-4.54 dBi
5,220,000,000 Hz	-4.84 dBi
5,250,000,000 Hz	-4.74 dBi
5,280,000,000 Hz	-5.54 dBi
5,300,000,000 Hz	-5.43 dBi
5,350,000,000 Hz	-5.44dBi
5,400,000,000 Hz	-5.44 dBi
5,500,000,000 Hz	-4.84 dBi
5,600,000,000 Hz	-4.84 dBi
5,700,000,000 Hz	-7.14 dBi
5,785,000,000 Hz	-8.00 dBi
5,800,000,000 Hz	-8.11 dBi
5,805,000,000 Hz	-8.01 dBi
5,850,000,000 Hz	-7.50 dBi
5,885,000,000 Hz	-7.81 dBi
5,895,000,000 Hz	-7.80 dBi
5,925,000,000 Hz	-10.64 dBi
6,025,000,000 Hz	-10.07 dBi
6,125,000,000 Hz	-11.19 dBi
6,225,000,000 Hz	-10.35 dBi
6,325,000,000 Hz	-10.55 dBi
6,425,000,000 Hz	-11.50 dBi
6,525,000,000 Hz	-10.37 dBi
6,625,000,000 Hz	-10.67 dBi
6,725,000,000 Hz	-11.48 dBi
6,825,000,000 Hz	-11.80 dBi
6,925,000,000 Hz	-11.43 dBi
7,025,000,000 Hz	-10.50 dBi
7,125,000,000 Hz	-10.63 dBi

This Document can not be used without Samsung's authorization | Samsung Electronics

BT/WIFI #2_2.4GHz(MAIN3), WIFI Ant#2_5 / 6 GHz (SUB5)

Freq. [Hz]	Peak. [dBi]
2,400,000,000 Hz	-9.4 dBi
2,412,000,000 Hz	-8.4 dBi
2,437,000,000 Hz	-8.8 dBi
2,442,000,000 Hz	-7.7 dBi
2,450,000,000 Hz	-7.7 dBi
2,462,000,000 Hz	-8.2 dBi
2,472,000,000 Hz	-7.8 dBi
2,484,000,000 Hz	-7.7 dBi
2,500,000,000 Hz	-7.7 dBi
5,150,000,000 Hz	-7.4 dBi
5,200,000,000 Hz	-6.9 dBi
5,220,000,000 Hz	-6.6 dBi
5,250,000,000 Hz	-6.5 dBi
5,280,000,000 Hz	-5.5 dBi
5,300,000,000 Hz	-5.8 dBi
5,350,000,000 Hz	-5.9 dBi
5,400,000,000 Hz	-5.9 dBi
5,500,000,000 Hz	-6.5 dBi
5,600,000,000 Hz	-6.7 dBi
5,700,000,000 Hz	-7.6 dBi
5,785,000,000 Hz	-7.6 dBi
5,800,000,000 Hz	-7.7 dBi
5,805,000,000 Hz	-7.8 dBi
5,850,000,000 Hz	-7.3 dBi
5,885,000,000 Hz	-7.5 dBi
5,895,000,000 Hz	-7.5 dBi
5,925,000,000 Hz	-10.2 dBi
6,025,000,000 Hz	-10.4 dBi
6,125,000,000 Hz	-9.7 dBi
6,225,000,000 Hz	-10.4 dBi
6,325,000,000 Hz	-10.4 dBi
6,425,000,000 Hz	-10.5 dBi
6,525,000,000 Hz	-10.3 dBi
6,625,000,000 Hz	-10.5 dBi
6,725,000,000 Hz	-10.9 dBi
6,825,000,000 Hz	-10.8 dBi
6,925,000,000 Hz	-10.2 dBi
7,025,000,000 Hz	-10.3 dBi
7,125,000,000 Hz	-10.1 dBi

Radiation Pattern Test

Antennas tested for Gain and Efficiency must be assembled into the enclosure and tested in the fully assembled and operating SM-F776B handset. The antenna is tested in free space in the anechoic chamber in the H, E1 and, E2 planes. The radiation patterns are measured at the center of transmit and receive bands.

A picture showing the geometry for this device is included in the test setup photos.

Chamber Information

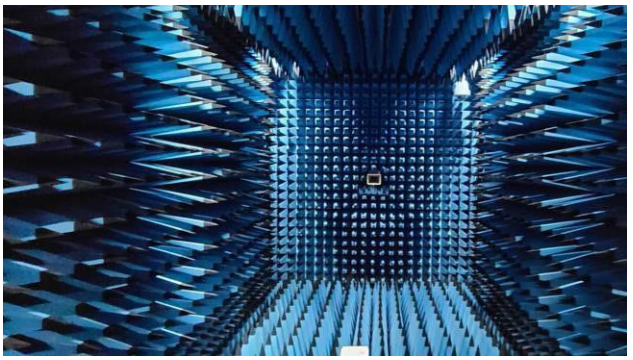

Figure 2: Geometry of Anechoic Chamber for Radiation patterns.

- ✓ Location : Samsung R&D Center R5 bld.
- ✓ Size : 4m x 2.5 x 2.5m (L x W x H)
- ✓ Frequency : 600 MHz -18GHz
- ✓ TX Antenna : 2GHz –18GHz Dual Polarization
- ✓ Quiet zone : 22cm @ 6GHz (Far-Field Length 2m)
- ✓ 2-axis DUT positioner -360°continuous rotation

Antenna Gain Measurement Procedure

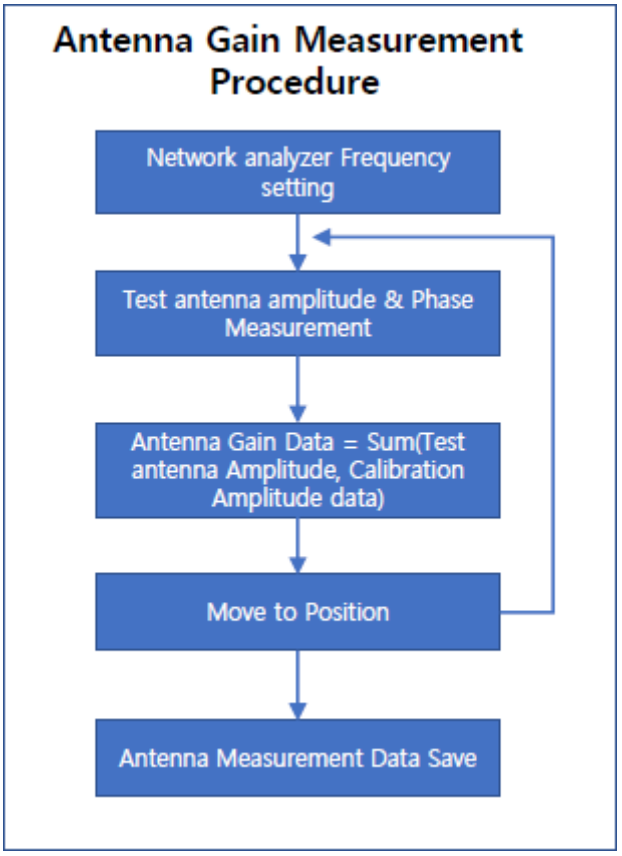

Detail antenna description

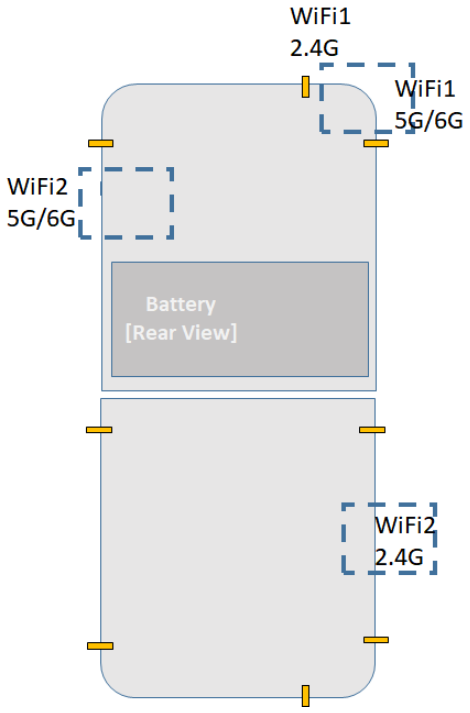

The antennas can be seen in the internal photos.

Table of calibrated equipment

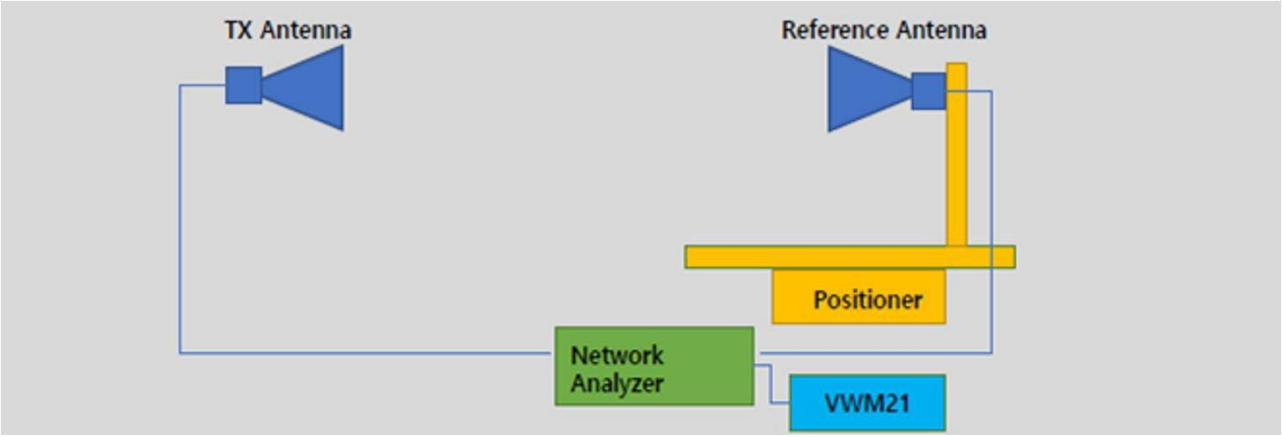

Part	Model Name	Specification	Cal date	Serial number
Tx Antenna	QRH-006M-006G	600MHz to 6GHz	Calibrated date :2025.12.23 / Cal. Due : 2026.12.22	-
	QRH-002G-018G	2GHz to 18GHz	Calibrated date :2025.12.23 / Cal. Due : 2026.12.22	-
Reference Antenna	BBHA9120LFA	680MHz to 6500MHz	Calibration Frequency(680MHzto 6GHz) Calibrated date :2025.12.23 / Cal. Due : 2026.12.22	9120LF-365
	BBHA9120C	2GHz to 18GHz	Calibration Frequency(2GHz to 8.5GHz) Calibrated date :2025.12.23 / Cal. Due : 2026.12.22	BBHA9120C#714
Network Analyzer	Agilent 5071B	300KHz to 8.5GHz	Calibrated date :2025.12.23 / Cal. Due : 2026.12.22	C000026236
Measurement Software	VWM21		MTG Visual Wave-Mobile(Ver.2.1)	-

Test dates

2026.04.01

Names of test personnel

Sung-koo Park

Names of commercial test software being used

MTG Visual Wave-Mobile (Ver.2.1)

Test setup photos

The antenna gain report test setup photos includes pictures of the measurement setup.
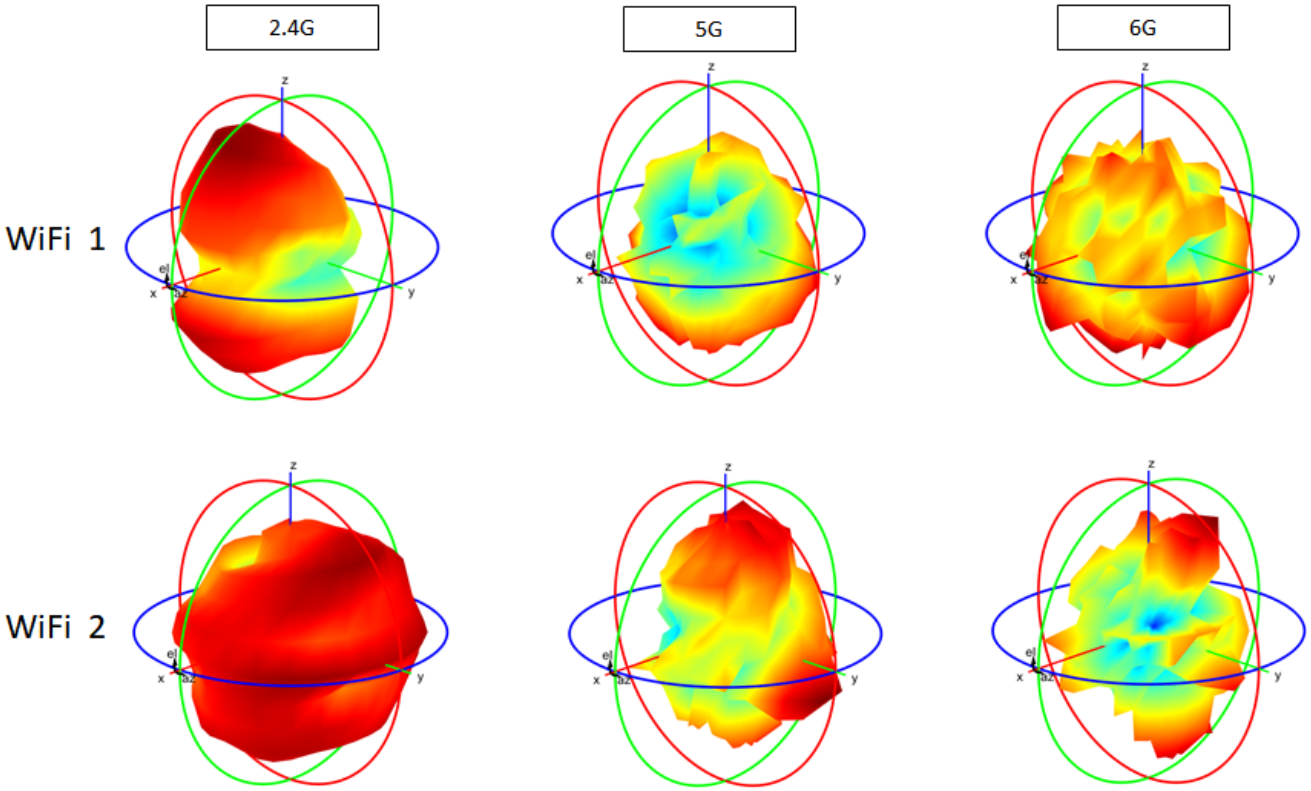
Radiation plots for max gain plane (3D)