FCC 47 CFR § 2.1093
RF EXPOSURE EVALUATION REPORT
(Part 2: Test Under Dynamic Transmission Condition)

FOR

GSM/WCDMA/LTE/5G NR Phone + BT/BLE, DTS/UNII a/b/g/n/ac/ax/be, NFC, UWB and WPT

MODEL NUMBER: SM-F968U1

FCC ID: A3LSMF968U

REPORT NUMBER: S-4791963822-S1V2

ISSUE DATE: 2025-11-26

Prepared for
SAMSUNG ELECTRONICS CO., LTD.
129 SAMSUNG-RO, YEONGTONG-GU, SUWON-SI,
GYEONGGI-DO, 16677, KOREA

Prepared by

UL Korea, Ltd.

26th floor, 152, Teheran-ro, Gangnam-gu Seoul, 06236, Korea

Suwon Test Site: UL Korea, Ltd. Suwon Laboratory
218 Maeyeong-ro, Yeongtong-gu,
Suwon-si, Gyeonggi-do, 16675, Korea
TEL: (031) 337-9902
FAX: (031) 213-5433

IAS ACCREDITED

Testing Laboratory

TL-637

Revision History

Rev.	Date	Revisions	Revised By
V1	2025-11-22	Initial Issue	--
V2	2025-11-26	Revised EFS-Plimit table in Table 4-1	Juyeon Choi

This report shall not be reproduced except in full, without the written approval of UL Korea, Ltd.

Table of Contents

Attestation of Test Results **5**

1. Introduction **6**

1.1 Part.2 Test Case Reduction for Multiple filings **6**

2. Tx Varying Transmission Test Cases and Test Proposal **7**

3. SAR Time Averaging Validation Test Procedures **9**

3.1. Test sequence determination for validation *9*

3.2. Test configuration selection criteria for validation Smart Transmit feature *9*

3.2.1 Test configuration selection for time-varying Tx power transmission *10*

3.2.2 Test configuration selection for change in call *10*

3.2.3 Test configuration selection for change in technology/band *11*

3.2.4 Test configuration selection for change in antenna *11*

3.2.5 Test configuration selection for change in DSI *11*

3.2.6 Test configuration selection for change in time window *12*

3.2.7 Test configuration selection for SAR exposure switching *12*

3.2.8 Test configuration selection for system level compliance continuity *13*

3.2.9 Test configuration selection for Exposure Category Switch *13*

3.3. Test procedures for conducted power measurements *14*

3.3.1 Time-varying Tx power transmission scenario *14*

3.3.2 Change in call scenario *16*

3.3.3 Change in technology and band *16*

3.3.4 Change in antenna *18*

3.3.5 Change in DSI *18*

3.3.6 Change in time window *18*

3.3.7 SAR exposure switching *20*

3.3.8 System level compliance continuity *21*

3.3.9 Exposure Category Switch *23*

4. Test Configurations **25**

4.1. WWAN (sub-6) & WLAN/BT transmission *25*

5. Conducted Power Test Results for Sub-6 Smart Transmit Feature Validation **29**

5.1. Measurement setup *29*

5.2. P_{limit} and P_{max} measurement results *34*

5.3. Time-varying Tx power measurement results (test case 1- 4 &10 in Table 5-1) *35*

5.3.1. GSM Band 1900 36

5.3.2. WCDMA Band II 37

This report shall not be reproduced except in full, without the written approval of UL Korea, Ltd.

5.3.3. LTE Band 48 38
5.3.4. NR Band n77 39
5.3.5. 5GHz SISO (802.11ac) 40
5.4. Change in Call Test Results (test case 5 in Table 5-1) 41
5.5. Change in DSI (test case 6 in Table 5-1) 42
5.6. Change in technology/band test results (test case 7 in Table 5-1) 43
5.7. Change in Window/Antenna test results (test case 8 in Table 5-1) 44
5.8. Switch in SAR exposure test result 45
5.8.1. WWAN (EN-DC : LTE+NR) (test case 9 in Table 5-1) 45
5.8.2. WLAN (DBS : 2.4GHz Radio+5GHz Radio) (test case 11 in Table 5-1) 46
5.9. System Level Compliance Continuity test results 47
5.9.1. WWAN/WLAN/BT System Level Compliance Continuity (test case 12 in Table 5-1) 47
5.10. Exposure Category Switch test results (test case 13 in Table 5-1) 48

6. Test Equipment 49

7. Conclusions 49

Section A. Test Sequences 50

Section B. Test Procedures for LTE + Sub6 NR 52

Appendixes 53

S-4791963822-S1 FCC SAR Part2 App A Photos 53

This report shall not be reproduced except in full, without the written approval of UL Korea, Ltd.

Attestation of Test Results

Applicant Name	SAMSUNG ELECTRONICS CO.,LTD.		
FCC ID	A3LSMF968U		
Model Number	SM-F968U1		
Applicable Standards	FCC 47 CFR § 2.1093		
Test samples	1	R3CY20KCG2F	Main Conducted
	2	R3CY20KCHCT	Main/WLAN Conducted
	3	R3CY20kcg1l	Main/WLAN Conducted
Date Tested	2025-10-20 to 2025-11-22		
Test Results	Pass		

UL Korea, Ltd. tested the above equipment in accordance with the requirements set forth in the above standards. All indications of Pass/Fail in this report are opinions expressed by UL Korea, Ltd. based on interpretations and/or observations of test results. Measurement Uncertainties were not taken into account and are published for informational purposes only. The test results show that the equipment tested is capable of demonstrating compliance with the requirements as documented in this report.

Note: The results documented in this report apply only to the tested sample, under the conditions and modes of operation as described herein. This document may not be altered or revised in any way unless done so by UL Korea, Ltd. and all revisions are duly noted in the revisions section. Any alteration of this document not carried out by UL Korea, Ltd. will constitute fraud and shall nullify the document. This report must not be used by the client to claim product certification, approval, or endorsement by IAS, any agency of the Federal Government, or any agency of any government.

Approved & Released By:	Prepared By:
Justin Park Operations Leader UL Korea, Ltd. Suwon Laboratory	Juyeon Choi Laboratory Engineer UL Korea, Ltd. Suwon Laboratory

This report shall not be reproduced except in full, without the written approval of UL Korea, Ltd.

1. Introduction

The equipment under test (EUT) is SM-F968U1(FCC ID : A3LSMF968U), it contains the Qualcomm modems supporting 2G/3G/4G/5G-Sub6 technologies and WLAN/BT technologies. But UWB/NFC technology is not support Qualcomm Smart Transmit. These modems are enabled with Qualcomm Smart Transmit feature to control and manage transmitting power in real time and to ensure at all times the time-averaged RF exposure is in compliance with the FCC requirement.

DUT contains embedded file system (EFS) version 23 configured for the 2rd Generation phase VI (GEN2.6).

EFS version Verification

Per Qualcomm's 80-w2112-5 document, embedded file system (EFS) products are required to be verified for Smart Tx generation for relevant MCC setting. It was confirmed that this DUT contains embedded file system (EFS) version 23 configured for Smart Tx the 2rd Generation phase VI (GEN2.6) for transmitters with MCC settings for the US market.

EFS v23 Generation	MCC
GEN2_SUB6	310

This purpose of the Part 2 report is to demonstrate the EUT complies with FCC RF exposure requirement under Tx varying transmission scenarios, thereby validity of Qualcomm Smart Transmit feature for FCC equipment authorization of A3LSMF968U.

Refer to Compliance summary report for product description and terminology used in this report.

1.1 Part.2 Test Case Reduction for Multiple filings

The number of test cases in Part 2 can be reduced in the case of multiple filings using same chipset and same EFS version (post full part 2 test on the first filing(FCC ID : A3LSMF966U)), the essential test cases in power measurement are required to ensure the Smart Transmit performs as expected in the new design, but the RF exposure measurement can be excluded.

So, This models used a same chipset and EFS version that had fully tested to Part.2 on first filing. Therefore, This model follow Part.2 Test case reduction procedures according to Qualcomm document (80-W2112-5). Please refer to section.4.1 for test case reduction scenarios.

This report shall not be reproduced except in full, without the written approval of UL Korea, Ltd.

2. Tx Varying Transmission Test Cases and Test Proposal

To validate time averaging feature and demonstrate the compliance in Tx varying transmission conditions, the following transmission scenarios are covered in Part 2 test:

1. During a time-varying Tx power transmission: To prove that the Smart Transmit feature accounts for Tx power variations in time accurately.

2. During a call disconnected and re-establish scenario: To prove that the Smart Transmit feature accounts for history of past Tx power transmissions accurately.

3. During technology/band handover: To prove that the Smart Transmit feature functions correctly during transitions in technology/band.

4. During antenna (or beam) switch: To prove that the Smart Transmit feature functions correctly during transitions in antenna (Such as AsDiv scenario) or beams (different antenna array configurations).

5. During change in device state: To prove that the Smart Transmit feature functions correctly during transitions in device state, say, from body-worn state to hotspot, or say, from extremity mode to body-worn state, etc. Devices state here refers to all the device configurations required to be tested by FCC, for example, head position, body-worn position, hotspot mode, and extremity.

6. During time window switch: To prove that the Smart Transmit feature correctly handles the transition from one time window to another specified by FCC, and maintains the normalized time-averaged RF exposure to be less than normalized FCC limit of 1.0 at all times.

7. SAR exposure switching between sub6 radios favor modes: To prove that the Smart Transmit feature functions correctly and ensures total RF exposure compliance when exposure varies among SAR_radio1 only, SAR_radio1 + SAR_radio2, and SAR_radio2 only scenarios.

8. System level compliance continuity :
   a) Within terrestrial networks (WWAN, WLAN, BT, etc.): To demonstrate the time averaged RF exposure compliance continuity during technology transition in both single-radio and multi-radio transmission scenarios and under both modes of WWAN modem while the USB is disconnected.

9. Exposure Category Switch : To prove that the Smart Transmit feature correctly during transitions from head to body-worn or vice versa. The exposure continuity is handled in two categories: Head exposure and non-head exposure.

As described in Part 0 report (QRD SAR Char and PD Char for Qualcomm Smart Transmit, Using Combination of Simulation and Measurement (80-W2112-2), the RF exposure is proportional to the Tx power for a SAR wireless device. Thus, time-averaging algorithm validation can be effectively performed through conducted/radiated power measurement. To have high confidence in this validation, but also be practical, the strategy for the validation including both power measurement and RF exposure measurement is outlined as follows:

This report shall not be reproduced except in full, without the written approval of UL Korea, Ltd.

Conducted power measurement:

- Measure conducted Tx power for *f* < 6GHz
- Convert it into RF exposure and divide by respective FCC limits to get normalized exposure
- Perform time-averaging over predefined time windows
- Demonstrate that the total normalized time-averaged RF exposure is less than 1.0 for all transmission scenarios (i.e., previous scenarios 1 to 9);

  - For sub-6 transmission only:

$$1g_or_10gSAR(t) = \frac{conducted_Tx_power(t)}{conducted_Tx_power_P_{limit}} * 1g_or_10gSAR_P_{limit} \quad (1a)$$

$$\frac{\frac{1}{T_{SAR}}\int_{t-T_{SAR}}^{t} 1g_or_10gSAR(t)dt}{FCC\ SAR\ limit} \leq 1 \quad (1b)$$

  - For sub-6 + mmW transmission:

$$1g_or_10gSAR(t) = \frac{conducted_Tx_power(t)}{conducted_Tx_power_P_{limit}} * 1g_or_10gSAR_P_{limit} \quad (2a)$$

$$1g_or_10gSAR(t) = \frac{radiated_Tx_power(t)}{radiated_Tx_power_input.power.limit} * 4cm^2PD_input.power.limit \quad (2b)$$

$$\frac{\frac{1}{T_{SAR}}\int_{t-T_{SAR}}^{t} 1g_or_10gSAR(t)dt}{FCC\ SAR\ limit} + \frac{\frac{1}{T_{PD}}\int_{t-T_{PD}}^{t} 4cm^2PD(t)dt}{FCC4cm^2PD\ limit} \leq 1 \quad (2c)$$

Where, *conducted_Tx_power (t)*, *conducted_Tx_power_P*$_{limit}$, and *1g_or_10gSAR_P*$_{limit}$ correspond to the measured instantaneous conducted Tx power, measured conducted Tx power at *P*$_{limit}$, and measured *1gSAR or 10gSAR* values at *P*$_{limit}$ for the worst-case radio configuration within the tested technology/band/Antenna/DSI. Similarly, *radiated_Tx_power(t)*, *radiated_Tx_power_input.power.limit*, and 4cm^{2}PD*_input,power.limit* correspond to the measured instantaneous radiated Tx power, radiated Tx power at *input.power.limit*, and 4cm^{2}PD value at *input.power.limit*. T_{SAR} is the time window for *f* < 6GHz radio defined by FCC; T_{PD} is the time window for *f* >= 6GHz radio defined by FCC.

Since it is possible to use two different units for Part1 and Part2 testing, *1g_or_10gSAR_P*$_{limit}$ in equations (1a) and (2a) refers to *1g_or_10gSAR* value corresponding to measured *P*$_{limit}$ of Part2 device. This can be calculated from reported SAR in Part1 report as shown below:

$$1g_or_10gSAR_P_{limit} = \frac{Part2_conducted_Tx_power_P_{limit}}{Part1_reported_P_{limit}} * Part1_reported_1gSAR$$

Peak Exposure Mode :

When Smart Transmit is configured for peak exposure mode, the Power operates Plimit level.

This report shall not be reproduced except in full, without the written approval of UL Korea, Ltd.

3. SAR Time Averaging Validation Test Procedures

This chapter provides the test plan and test procedures for validating Qualcomm Smart Transmit feature for sub-6 transmission. The 100 seconds time window for operating f < 3GHz is used as an example to detail the test procedures in this chapter. The same test plan and test procedures described in this chapter apply to 60 seconds time window for 3 GHz =< *f* > 6 GHz.

3.1. Test sequence determination for validation

Following the FCC recommendation, two test sequences having time-variation in Tx power are predefined for sub-6 (f < 6GHz) validation:

- Test sequence 1 : request EUT's Tx power to be at maximum power, measured P_{max}, for 80s, then requesting for half of the maximum power, i.e., measured $P_{max}/2$, for the rest of the time.
- Test sequence 2 : request EUT's Tx power to vary with time. This sequence is generated relative to measured P_{max}, measured P_{limit} and Calcuated $P_{reserve}$ (= measured P_{limit} in dBm – *Reserve_power_margin* in dB) of EUT based on measured P_{limit}.

For WLAN, Since WLAN radios do not have closed loop power control, average Tx power level of WLAN radios is indirectly varied by transmitting at varying duty cycles. Test sequence #1 described previously can be converted into duty cycle at P_{max}, i.e., duty cycle for an arbitrary Tx power level = (Tx power level / P_{max}). Test sequence #2 is not achieviable due to current test capability. Therefore, in the interim, it is exempt.

For BT, Smart Transmit with EFS version 19 (or Higher) does not allow instantaneous Tx power of BT radio to exceed P_{limit} at any time instance, therefore, BT is not needed to be included in time-varying test.

The details for generating these Sub-6's two test sequences & WLAN's test sequence are described and listed in Section A.

Note: For test sequence generation, "measured P_{limit}" and "measured P_{max}" are used instead of the "P_{limit}" specified in EFS entry and "P_{max}" specified for the devise, because Smart Transmit feature operates against the actual power level of the "P_{limit}" that was calibrated for the EUT. The "measured P_{limit}" accurately reflects what the feature is referencing to, therefore, it should be used during feature validation testing. The RF tune up and device-to-device variation are already considered in Part 0 report prior to determining P_{limit}.

3.2. Test configuration selection criteria for validation Smart Transmit feature

For validating Smart Transmit feature, this section provides a general guidance to select test cases. In practice, an adjustment can be made in test case selection. The justification/clarification may be provided.

This report shall not be reproduced except in full, without the written approval of UL Korea, Ltd.

3.2.1 Test configuration selection for time-varying Tx power transmission

The Smart Transmit time averaging feature operation is independent of bands, modes, and channels for a given technology. Hence, validation of Smart Transmit on one band/mode/channel per technology is sufficient. Two bands per technology are proposed and selected for this testing to provide high confidence in this validation.

The criteria for the selection are based on the P_{limit} values determined in Part 0 report. Select two bands* in each supported technology that correspond to least** and highest*** P_{limit} values that are less than P_{max} for validating Smart Transmit.

***** If one P_{limit} level applies to all the bands within a technology, then only one band needs to be tested. In this case, within the bands having the same P_{limit}, the radio configuration (e.g., # of RBs, channel#) and devise position that correspond to the highest *measured 1g or 10gSAR* at P_{limit} shown in Part 1 report is selected.

****** In case of multiple bands having the same least P_{limit} within the technology, then select the band having the largest difference between P_{max} and $P_{limit.}$

******* The band having a higher P_{limit} needs to be properly selected so that the power limiting enforced by Smart Transmit can be validated using the pre-defined test sequences. If the highest P_{limit} in a technology is too high where the power limiting enforcement is not needed when testing with the pre-defined test sequences, then the next highest level is checked. This process is continued within the technology until second band for validation test is determined.

3.2.2 Test configuration selection for change in call

The criteria to select a test configuration for call-drop measurement is:

- Select technology/band with least P_{limit} among all supported technologies/bands, and select the radio configuration (e.g., # of RBs, channel#) in this technology/band that corresponds to the highest *measured 1g or 10gSAR* at P_{limit} listed in Part 1 report.
- In case of multiple bands having same least P_{limit}, then select the band having the highest *measured 1g or 10gSAR* at P_{limit} in Part 1 report.
- Test for change in call is not required if all $P_{limit} > P_{max}$

This test is performed with the EUT's Tx power requested to be at maximum power, the above band selection will result in Tx power enforcement (i.e., during the time when EUT is forced to have Tx power at $P_{reserve}$) for longest duration in one FCC defined window. The call change (call drop/reestablish) is performed during the Tx power enforcement duration (i.e., during the time when EUT is forced to have Tx power at $P_{reserve}$). One test is sufficient as the feature operation is independent of technology and band.

This report shall not be reproduced except in full, without the written approval of UL Korea, Ltd.

3.2.3 Test configuration selection for change in technology/band

The selection criteria for this measurement is, for a given antenna, to have EUT switch from a technology/band with lowest P_{limit} within the technology group (in case of multiple bands having the same P_{limit}, then select the band with highest *measured 1g or 10gSAR* at P_{limit}) to a technology/band with highest P_{limit} within the technology group, in case of multiple bands having the same P_{limit}, then select the band with lowest *measured 1g or 10gSAR* at P_{limit} in Part 1 report, or vice versa.

This test is performed with the EUT's Tx power requested to be at maximum power, the technology/band switch is performed during Tx power enforcement duration (i.e., during the time when EUT is forced to have Tx power at $P_{reserve}$).

3.2.4 Test configuration selection for change in antenna

The criteria to select a test configuration for antenna switch measurement is:

- Whenever possible and supported by the EUT, first antenna switch configuration within the same technology/band (i.e., same technology and band combination).
- Then, select any technology/band that supports multiple Tx antennas, and has the highest difference in P_{limit} among all supported antennas.
- In case of multiple bands having same difference in P_{limit} among supported antennas, then select the band having the highest *measured 1g or 10gSAR* at P_{limit} in Part 1 report.

This test is performed with the EUT's Tx power requested to be at maximum power in selected technology/band, and antenna change is conducted during Tx power enforcement duration (i.e., during the time when EUT is forced to have Tx power at $P_{reserve}$).

3.2.5 Test configuration selection for change in DSI

The criteria to select a test configuration for DSI change test is:

- Select a technology/band having the $P_{limit} < P_{max}$ within any technology and DSI group, and for same technology/band having a different P_{limit} in any other DSI group. Note that the selected DSI transition need to be supported by the device.

This test is performed with the EUT's Tx power requested to be at maximum power in selected technology/band, and DSI change is conducted during Tx power enforcement duration (i.e., during the time when EUT is forced to have Tx power at $P_{reserve}$).

Note(s):

Selected DSIs should be under the same exposure category (i.e., both selected DSIs are either under head exposure category or under non-head exposure category) if DUT is enabled with Smart Transmit version 18 or higher.

This report shall not be reproduced except in full, without the written approval of UL Korea, Ltd.

3.2.6 Test configuration selection for change in time window

FCC specifies different time window for time averaging based on operation frequency. The criteria to select a test configuration for validating Smart Transmit feature and demonstrating the compliance during the change in time window is:

- Select any technology/band that has operation frequency classified in a different time window defined by FCC (such as 100-seconds time window), and its corresponding P_{limit} is less than P_{max} if possible.
- Select the 2nd technology/band that has operation frequency classified in a different time window defined by FCC (such as 60-seconds time window), and its corresponding P_{limit} is less than P_{max} if possible.
- Note it is preferred both P_{limit} values of two selected technology/band less than corresponding P_{max}, but if not possible, at least one of technologies/bands has its P_{limit} less than Pmax.

This test is performed with the EUT's Tx power requested to be at maximum power in selected technology/band. Test for one pair of time windows selected is sufficient as the feature operation is the same.

3.2.7 Test configuration selection for SAR exposure switching

If supported, the test configuration for SAR exposure switching should cover:

1. SAR exposure switch when two active radios are in the same time window
2. SAR exposure switch when two active radios are in different time windows. One test with two active radios in any two different time windows is sufficient as Smart Transmit operation is the same for RF exposure switch in any combination of two different time windows.

The Smart Transmit time averaging operation is independent of the source of SAR exposure (for example, LTE vs. Sub6 NR) and ensures total time-averaged RF exposure compliance. Hence, validation of Smart Transmit in any one simultaneous SAR transmission scenario (i.e., one combination for LTE + Sub6 NR transmission) is sufficient, where the SAR exposure varies among SAR_{radio1} only, SAR_{radio1} + SAR_{radio2}, and SAR_{radio2} only scenarios.

The criteria to select a test configuration for validating Smart Transmit feature during SAR exposure switching scenarios is:

- Select any two < 6GHz technologies/bands that the EUT supports simultaneous transmission (for example, LTE + Sub NR)
- Among all supported simultaneous transmission configurations, the selection order is
  1. Select one configuration where both P_{limit} of radio1 and radio2 is less than their corresponding P_{max}, preferably, with different P_{limits}. If this configuration is not available, then,
  2. Select one configuration that has P_{limit} less than its P_{max} for at least one radio. If this cannot be found, then.
  3. Select one configuration that has P_{limit} of radio1 and radio2 greater than P_{max} but with least (P_{limit} – P_{max}) delta.

Test for one simultaneous transmission scenario is sufficient as the feature operation is the same. Additional details for testing for LTE+Sub6 NR non-standalone is provided in Section.B.

This report shall not be reproduced except in full, without the written approval of UL Korea, Ltd.

3.2.8 Test configuration selection for system level compliance continuity

3.2.8.1 Selection criteria for WWAN/WLAN/BT system level test

The purpose of system level compliance test is to demonstrate the compliance continuity in the following scenarios while the USB is disconnected:

1. Across technology switch
2. During transition from single technology to multi-technology
3. In transition when WWAN went from On to airplane mode
4. Active WLAN radio and/or Bluetooth (BT) radio with WWAN in airplane mode
5. Time window transition when WWAN in airplane mode
6. In transition when WWAN went from airplane mode to ON.

Note: Technology in this section refers to WWAN, WLAN or BT

The selection criteria for radios to be tested is to select a radio which has the largest P_{max} / P_{limit} Ratio among all configurations supported (including SISO, MIMO, DBS, SISO+MIMO or DBS+MIMO whichever appropriate) within each technology and within the same antenna group.

3.2.9 Test configuration selection for Exposure Category Switch

The purpose of this test is to demonstrate that Smart Transmit ensures time-averaged RF exposure compliance when the EUT exposure category changes. For this purpose, there are two tests performed:

(a) Start with head exposure and switch to non-head exposure and switch back to head exposure,
(b) Start with non-head exposure and switch to head exposure and switch back to non-head exposure.

The criteria to select a test configuration for exposure category switch measurement is:

1. If the device's intended exposure mode is configured for time averaged exposure mode operation then:
   - If Plimit < Pmax for at least one radio of all supported technology/band/antenna/DSI, then:

     (a) Out of all head exposure DSIs, select a technology/band/antenna/DSI having the least Plimit (<Pmax), furthermore, having the largest difference between Pmax and Plimit (Plimit < Pmax) should be considered in the selection. Then, select a second DSI in the non-head exposure category DSI that has the least Plimit among all the non-head DSIs for the same technology/band/antenna. This technology/band/antenna and selected DSIs are used for head to non-head to head exposure switch test. If the Plimit > Pmax for all supported technology/band/antenna/DSI in head exposure category, then this test is not required.
     (b) Similarly, out of all non-head exposure DSIs, select a technology/band/antenna/DSI having the least Plimit (<Pmax), furthermore, having the largest difference between Pmax and Plimit (Plimit < Pmax) should be considered in the selection. Then, select a second DSI in the head exposure category DSI that has the least Plimit among all the head DSIs for the same technology/band/antenna. This technology/band/antenna and selected DSIs are used for non-head to head to non-head exposure switch test. If the Plimit > Pmax for all supported technology/band/antenna/DSI in non-head exposure category, then this test is not required.

   The validation criteria are, at all times, the combined time-averaged 1gSAR or 10gSAR versus time determined in Step 6c shall not exceed the regulatory *1g or 10gSAR*$_{limit}$ limit.

This report shall not be reproduced except in full, without the written approval of UL Korea, Ltd.

3.3. Test procedures for conducted power measurements

This section provides general conducted power measurement procedures to perform compliance test under dynamic transmission scenarios described in Section 2. In practice, an adjustment can be made in these procedures. The justification/clarification may be provided.

3.3.1 Time-varying Tx power transmission scenario

This test is performed with the two pre-defined test sequences described in Section 3.1 for all the technologies and bands selected in Section 3.2.1. The purpose of the test is to demonstrate the effectiveness of power limiting enforcement and that the time-averaged SAR (corresponding time averaged Tx power) does not exceed the FCC limit at all times (see Eq. (1a) and (1b)).

Test procedure:

1. Measure P_{max}, measure P_{limit} and calculate Preserve (= measured P_{limit} in dBm – *Reserve_power_margin* in dB) and follow Section 3.1 to generate the test sequences for all the technologies and bands selected in Section 3.2.1. Both test sequence 1 and test sequency 2 are created based on measured P_{max} and measured P_{limit} of the EUT. Test condition to measure P_{max} and P_{limit} is:

   - Measure P_{max} with Smart Transmit <u>disable</u> and callbox set to request maximum power.
   - Measure P_{limit} with Smart Transmit <u>enable</u> and *Reserve_power_margin* set to 0 dB (Peak exposure mode); callbox set to request maximum power.

2. Set *Reserve_power_margin* to actual (intended) value (3dB for this EUT based on Part 1 report) and reset power on EUT to enable Smart Transmit, establish radio link in desired radio configuration, with callbox requesting the EUT's Tx power to be at pre-defined test sequence 1, measure and record Tx power versus time, and then convert the conducted Tx power into 1gSAR or 10gSAR value (see Eq. (1a)) using measured P_{limit} from above Step 1. Perform running time average to determine time-averaged power and 1gSAR or 10gSAR versus time as illustrated in Figure A-1 where using 100-secnods time window as an example.

   Note: In Eq.(1a), instantaneous Tx power is converted into instantaneous 1gSAR or 10gSAR value by applying the measured worst-case 1gSAR or 10gSAR value at P_{limit} for the corresponding technology/band/antenna/DSI reported in Part 1 report.

   Note: For an easier computation of the running time average, 0 dBm can be added at the beginning of the test sequences the length of the responding time window, for example, add 0 dBm for 100-seconds so the running time average can be directly performed starting with the first 100-seconds data using excel spreadsheet. This technique applies to all tests performed in this Part 2 report for easier time-averaged computation using excel spreadsheet.

This report shall not be reproduced except in full, without the written approval of UL Korea, Ltd.

Time	Power/SAR
t_1	P_{t1} or SAR_{t1}
t_2	P_{t2} or SAR_{t2}
:	:
:	:
t_n (t_1+100s)	P_{tn} or SAR_{tn}
t_{n+1} (t_2+100s)	P_{tn+1} or SAR_{tn+1}
:	:

1st 100s time window

$$time\ averaged\ P1\ or\ SAR1 = \frac{\sum_{i=1}^{n} P_{ti}\ or\ SAR_{ti}}{n}$$

2nd 100s time window

$$time\ averaged\ P2\ or\ SAR2 = \frac{\sum_{i=2}^{n+1} P_{ti}\ or\ SAR_{ti}}{n}$$

Figure A-1 100s running average illustration

3. Make one plot containing:
   a. Computed time-averaged 1gSAR or 10gSAR versus time determined in Step 2
   b. Corresponding regulatory *1g or 10gSAR*$_{limit}$ limit.

4. Repeated Steps 2 ~ 3 for pre-defined test sequence 2.

5. Repeat Steps 2 ~ 4 for all the selected technologies and bands.

The validation criteria is, at all times, the time-averaged 1gSAR or 10gSAR versus time shown in Step 2 (and plotted in Step 4) shall not exceed regulatory *1g or 10gSAR*$_{limit}$ limit.

This report shall not be reproduced except in full, without the written approval of UL Korea, Ltd.

3.3.2 Change in call scenario

This test is to demonstrate that Smart Transmit feature accurately accounts for the past Tx powers during time-averaging when a new call is established.

The call disconnects and re-establishment needs to be performed during power limit enforcement, i.e., when the EUT's Tx power is at $P_{reserve}$ level, to demonstrate the continuity of RF exposure management and limiting in call change scenario. In other words, the RF exposure averaged over any FCC defined time window (including the time windows containing the call change) doesn't exceed regulatory *1g or* $10gSAR_{limit}$ limit.

Test procedure:

1. Measure P_{limit} for the technology/band selected in Section 3.2.2. measure P_{limit} with Smart Transmit enable and *Reserve_power_margin* set to 0 dB (Peak exposure mode); callbox set to request maximum power.
2. Set *Reserve_power_margin* to actual (intended) value and reset power on EUT to enable Smart Transmit.
3. Establish radio link with callbox in the selected technology/band.
4. Request EUT's Tx power at 0 dBm for at least one time window specified for the selected technology/band, followed by requesting EUT's Tx power to be at maximum power for about ~60 seconds, and then drop the call for ~10 seconds. Afterwards, re-establish another call in the same radio configuration (i.e., same technology/band/channel) and continue callbox requesting EUT's Tx power to be at maximum power for the remaining time of at least another full duration of the specified time window. Measure and record Tx power versus time.
5. Once the measurement is done, extract instantaneous Tx power versus time, and convert the conducted Tx power into 1g or 10gSAR value using Step 1 result, and then perform one time window specified running average to determine time-averaged 1g or 10gSAR value versus time.
6. Make one plot containing: (a) computed time-averaged 1g or 10gSAR versus time determine in Step 4 for the first call, (b) computed time-averaged 1g or 10gSAR versus time determine in Step 4 for the second call, (c) computed time-averaged 1g or 10gSAR of the first call and second call versus time and (d) corresponding regulatory *1g or* $10gSAR_{limit}$ limit.

The validation criteria are, at all times, the combined time-averaged 1gSAR or 10gSAR versus time determined in Step 6c shall not exceed the regulatory *1g or* $10gSAR_{limit}$ limit.

3.3.3 Change in technology and band

This test is to demonstrate the correct power control by Smart Transmit during technology and/or band handovers.

Similar to the change in call test in Section 3.3.2, to validate the continuity of RF exposure limiting during the transition, the technology and band handover needs to be performed when EUT's Tx power is at $P_{reserve}$ level (i.e., during Tx power enforcement) to make sure that the EUT's Tx power from previous $P_{reserve}$ level to the new $P_{reserve}$ level (corresponding to new technology/band). Since the P_{limit} could vary with technology and band, Eq.(1a) can be written as follows to convert the instantaneous Tx power in 1gSAR or 10gSAR exposure for the two given radios, respectively:

This report shall not be reproduced except in full, without the written approval of UL Korea, Ltd.

$$1g_or_10gSAR_1(t) = \frac{conducted_Tx_power_1(t)}{conducted_Tx_power_P_{limit_1}} * 1g_or_10gSAR_P_{limit_1} \quad (3a)$$

$$1g_or_10gSAR_2(t) = \frac{conducted_Tx_power_2(t)}{conducted_Tx_power_P_{limit_2}} * 1g_or_10gSAR_P_{limit_2} \quad (3b)$$

$$\frac{\frac{1}{T_{SAR}}\left[\int_{t-T1_{SAR}}^{t_1} 1g_or_10gSAR_1(t)dt + \int_{t-T2_{SAR}}^{t} 1g_or_10gSAR_2(t)dt\right]}{1g_or_10gSAR_{limit}} \leq 1 \quad (3c)$$

where, *conducted_Tx_power_1(t)*, *conducted _Tx_power_P*$_{limit_1}$, and *1g_or_1gSAR_P*$_{limit_1}$ correspond to the measured instantaneous conducted Tx power, measured conducted Tx power at P_{limit}, and measured *1g SAR* or *10gSAR* value at technology1/band1; *conducted_Tx_power_2(t)*, *conducted _Tx_power_P*$_{limit_2}$, and *1g_or_10gSAR_P*$_{limit_2}$ correspond to the measured instantaneous conducted Tx power, measured conducted Tx power at P_{limit}, and measured *1gSAR* or *10gSAR* value at P_{limit} of technology2/band2. Transition from technology1/band1 to the technology2/band2 happens at time-instant 't_1'.

Test procedure:

1. Measure P_{limit} for both the technologies and bands selected in Section 3.2.3. Measure P_{limit} with Smart Transmit <u>enabled</u> and *Reserve_power_margin* set to 0 dB (Peak exposure mode); callbox set to request maximum power.
2. Set *Reserve_power_margin* to actual(intended) value and reset power on EUT to enable Smart Transmit.
3. Establish radio link with callbox in first technology/band selected.
4. Request EUT's Tx power at 0 dBm for at least one time window specified for the selected technology/band, followed by requesting EUT's Tx power to be at maximum power for about ~60 second, and then switch to second technology/band selected. Continue with callbox requesting EUT's Tx power to be at maximum power for the remaining time of least another full duration of the specified time window. Measure and record Tx power versus time for the full duration of the test.
5. Once the measurement is done, extract instantaneous Tx power versus time, and convert the conducted Tx power into 1gSAR or 10gSAR value using Eq.(3a) and (3b) and corresponding measured P_{limit} values from Step 1 of this section. Perform the running time average to determine time-averaged power and 1gSAR or 10gSAR versus time.
   Note: In Eq.(3a) & (3b), instantaneous Tx power is converted into instantaneous 1gSAR or 10gSAR value by applying the measured the measured worst-case 1gSAR or 10gSAR value at P_{limit} for the corresponding technology/band reported in Part 1 report.
6. Make one plot containing: (a) computed time-averaged 1gSAR or 10gSAR of the first technology/band versus time determined in Step 5, (b) computed time-averaged 1gSAR or 10gSAR of the second technology/band versus time determined in Step 5, (c) combined time-averaged 1g or 10gSAR of the first technology/band and second technology/band versus time determined in Step 5 and (d) corresponding regulatory *1g or 10gSAR*$_{limit}$ limit.

The validation criteria are, at all times, the combined time-averaged 1gSAR or 10gSAR versus time determined in Step 6c shall not exceed the regulatory *1g or 10gSAR*$_{limit}$ limit.

This report shall not be reproduced except in full, without the written approval of UL Korea, Ltd.

3.3.4 Change in antenna

This test is to demonstrate the correct power control by Smart Transmit during antenna switches from primary to diversity. The test procedure is identical to Section 3.3.3, with switching antenna instead of technology/band. The validation criteria are, at all times, the time-average 1gSAR or 10gSAR versus time shall not exceed the regulatory *1g or 10gSAR*$_{limit}$ limit.

Note: If the EUT does not support multiple transmitting WWAN antennas, the compliance plot for change in antenna should be similar to the plot for change in technology/band.

3.3.5 Change in DSI

This test is to demonstrate the correct power control by Smart Transmit during DSI switches from one DSI to another. The test procedure is identical to Section 3.3.3, with changing device state instead of technology/band. The validation criteria is, at all times, the time-averaged 1gSAR or 10gSAR versus time shall not exceed the regulatory *1g or 10gSAR*$_{limit}$ limit.

Note: If the EUT does not support multiple device states, the compliance plot for change in device state should be similar to the plot for change in technology/band.

3.3.6 Change in time window

This test is to demonstrate the correct power control by Smart Transmit during the change in averaging time window when a specific band handover occurs. FCC specifies time-averaging window of 100s for Tx frequency < 3GHz, and 60s for Tx frequency between 3GHz and 6Ghz. To validate the continuity of RF exposure limiting during the transition, the band handover test needs to be performed when EUT handovers from operation band less than 3GHz to greater than 3GHz and vice versa. The equations (3a) and (3b) in Section 2 can be written as follows for transmission scenario having change in time window:

$$1g_or_10gSAR_1(t) = \frac{conducted_Tx_power_1(t)}{conducted_Tx_power_P_{limit_1}} * 1g_or_10gSAR_P_{limit_1} \quad (3a)$$

$$1g_or_10gSAR_2(t) = \frac{conducted_Tx_power_2(t)}{conducted_Tx_power_P_{limit_2}} * 1g_or_10gSAR_P_{limit_2} \quad (3b)$$

$$\frac{\frac{1}{T_{SAR}}\left[\int_{t-T1_{SAR}}^{t_1} 1g_or_10gSAR_1(t)dt + \int_{t-T2_{SAR}}^{t} 1g_or_10gSAR_2(t)dt\right]}{1g_or_10gSAR_{limit}} \leq 1 \quad (3c)$$

Where, *conducted_Tx_power_1(t)*, *conducted_Tx_power_P*$_{limit_1}$*(t)*, and *1g_ or 10g_SAR_P*$_{limit_1}$ correspond to the instantaneous Tx power, conducted Tx power at Plimit, and compliance *1g_ or 10g_SAR* values at P_{limit_1} of band1 with time-averaging window '$T1_{SAR}$'; *conducted_Tx_power_2(t)*, Conducted Tx power at P_{limit} , and compliance *1g_ or 10g_SAR* values at P_{limit_2} of Band2 with time-averaging window '$T2_{SAR}$'. One of the two bands is less than 3GHz, another is greater than 3GHz. Transition from first band with time-averaging window '$T1_{SAR}$' to the second band with time-averaging window '$T2_{SAR}$' happens at time-instant 't_1'.

This report shall not be reproduced except in full, without the written approval of UL Korea, Ltd.

Test procedure:

1. Measure P_{limit} for both the technologies and bands selected in Section 3.2.6 Measure P_{limit} with Smart Transmit enabled and *Reserve_power_margin* set to 0 dB(Peak exposure mode), callbox set to request maximum power.
2. Set *Reserve_power_margin* to actual (intended) value and enable Smart Transmit.

Transition from 100s time window to 60s time window, and vice versa

3. Establish radio link with callbox in the technology/band having 100s time window selected in Section 3.2.6.
4. Request EUT's Tx power to be at 0 dBm for at least 100 seconds, followed by requesting EUT's Tx power to be at maximum power for about ~140 seconds, and then switch to second technology/band (having 60s time window) selected in Section 3.2.6. Continue with callbox requesting EUT's Tx power to be at maximum power for at least another 100s. Measure and record Tx power versus time for the entire duration of the test.
5. Once the measurement is done, extract instantaneous Tx power versus time, and convert the conducted Tx power into 1gSAR or 10gSAR value (see Eq.(3a) and (3b)) using corresponding technology/band Step 1 result, and then perform 100s average to determine time-averaged 1gSAR or 10gSAR versus time. Note that in Eq.(3a) & (3b), instantaneous Tx power is converted into instantaneous 1gSAR or 10gSAR value by applying the worst-case 1gSAR or 10gSAR value tested in Part 1 for the selected technologies/bands at P_{limit}.
6. Make one plot containing: (a) computed time-averaged 1g or 10gSAR of the first technology/band (having 100s time window) versus time determined in Step 5, (c) computed time-averaged 1g or 10gSAR of the second technology/band (having 60s time window) versus time determined in Step 5, (c) combined time-averaged 1g or 10gSAR of (a) and (b), and (d) corresponding regulatory *1g* or $10gSAR_{limit}$ limit.

Transition from 60s time window to 100s time window, and vice versa

7. Establish radio link with callbox in the technology/band having 60s time window selected in Section 3.2.6.
8. Request EUT's Tx power to be at 0 dBm for at least 60 seconds, followed by requesting EUT's Tx power to be at maximum power for about ~80 seconds, and then switch to second technology/band (having 100s time window) selected in Section 3.2.6. Continue with callbox requesting EUT's Tx power to transmit at maximum power for about 100s in this second technology/band, and then switch back to the first technology/band. Continue with callbox requesting EUT to transmit at maximum Tx power for at least another 140s. Measure and record Tx power versus time for the entire duration of the test.
9. Repeat above Step 5~6 procedures to generate the corresponding plots

The validation criteria is, at all times, the time-averaged 1gSAR or 10gSAR versus time shall not exceed the regulatory *1g* or $10gSAR_{limit}$ limit.

This report shall not be reproduced except in full, without the written approval of UL Korea, Ltd.

3.3.7 SAR exposure switching

This test is to demonstrate that Smart Transmit feature is accurately accounts for switching in exposures among SAR from radio1 only, SAR from both radio1 and radio2, and SAR from radio2 only scenarios, and ensures total time-averaged RF exposure complies with the FCC limit. The detailed test procedure for SAR exposure switching in the case of LTE + Sub6 NR non-standalone mode transmission scenarios is provided in Section.B.

Test procedure:

1. Measure conducted Tx power corresponding to P_{limit} for radio 1 and radio 2 in selected band. Test condition to measure conducted P_{limit} is:
   - Establish device in call with the callbox for radio1 technology/band. Measure conducted Tx power corresponding to radio 1 P_{limit} with Smart Transmit enable and *Reserve_Power_margin* set to 0 dB(Peak exposure mode), callbox set to request maximum power.
   - Repeat above step to measure conducted Tx power corresponding to radio2 P_{limit}. If radio2 is dependent on radio1 (for example, non-standalone mode of Sub6 NR requiring radio1 LTE as anchor), then establish radio1 + radio2 call with callbox, and request all down bits for radio1 LTE. In this scenario, with callbox requesting maximum power from radio2 Sub6 NR, measured conducted Tx power corresponds to radio2 P_{limit} (as radio1 LTE is at all-down bits)
2. Set *Reserve_power_margin* to actual (intended) value, with EUT setup for radio1 + radio2 call. In this description, it is assumed that radio2 has lower priority than radio1. Establish device in radio1 + radio2 call, and request all-down bits or low power on radio1, with callbox requesting EUT's Tx power to be at maximum power in radio2 for at least one time window. After one time window, set callbox to request EUT's Tx power to be at maximum power on radio1, i.e., all-up bits. Continue radio1 + radio2 call with both radios at maximum power for at least one time window, and drop (or request all-down bits on) radio2. Continue radio1 at maximum power for at least one time window. Record the conducted Tx power for both radio1 and radio2 for the entire duration of this test.
3. Once the measurement is done, extract instantaneous Tx power versus time for both radio1 and radio2 links. Convert the conducted Tx power for both theses radios into 1gSAR or 10gSAR value (see Eq.(6a) and (6b)) using corresponding technology/band P_{limit} measured in Step 1, and then perform the running time average to determine time-averaged 1gSAR or 10gSAR versus time.
4. Make one plot containing: (a) computed time-averaged 1g or 10gSAR versus time determined in Step 3, and combined time-averaged 1g or 10gSAR versus time, and (b) corresponding regulatory *1g* or $10gSAR_{limit}$ limit.

The validation criteria is, at all times, the time-averaged 1gSAR or 10gSAR versus time shall not exceed the regulatory *1g* or $10gSAR_{limit}$ limit.

Note: If multi_Tx_factor is set to > 1.0 with EFS version 19 (or higher), then in single Tx transmission scenarios, Smart Transmit ensures time-averaged RF exposure is ≤ ($SAR_design_target * 10^{(+\text{sub6 device uncertainty} / 10)}$) < regulatory RF exposure limit for sub6 radio managed by Smart Transmit.
In simultaneous Tx transmission scenarios, Smart Transmit ensures time-averaged RF exposure is ≤ ($SAR_design_target * multi_Tx_factor * 10^{(+\text{sub6 device uncertainty} / 10)}$) < regulatory RF exposure limit for sub6 radios managed by Smart Transmit. These simultaneous transmission scenarios are listed below:

- 2-or-more radio scenarios within WWAN like EN-DC, LTE ULCA, etc.
- 2-or-more-radio across technologies such as WWAN+WLAN, WWAN+BT, WLAN+BT and WWAN+WLAN+BT transmission scenarios (if WLAN/BT radios are also managed by Smart Transmit).

This report shall not be reproduced except in full, without the written approval of UL Korea, Ltd.

3.3.8 System level compliance continuity

3.3.8.1 WWAN/WLAN/BT radio system level compliance continuity

Below is the test flow outline of the system level compliance test. The test contains 6 sections and 5 transitions: Start with WWAN radio transmission (Section A), transition to WLAN transmission (Section B), transition to simultaneous transmission of WWAN + WLAN + BT (Section C), then drop off WWAN radio and set WWAN to airplane mode, at the same time transition to WLAN + BT transmission simultaneously (Section D), transition to BT only transmission (Section E), transition to WLAN only transmission (Section F) and finally transition back to simultaneous transmission of WWAN + WLAN + BT with modem online while the USB is disconnected.

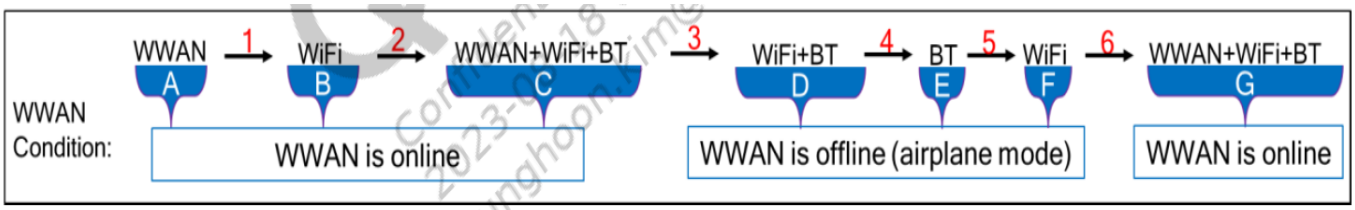

Figure S-1 Schematic of technology transitions for system level compliance continuity test.

It is recommended for OEMs to demonstrate compliance at system level, i.e., demonstrate compliance continuity across technologies, i.e., across WWAN, WLAN, BT, etc. In this regard, a new test case is designed to test the time-averaged RF exposure compliance continuity in the following scenarios with 6 transitions while the USB is disconnected:

1. Across technology switch
2. During transition from single technology to multiple technology
3. In transition when WWAN went from ON to airplane mode
4. Active WLAN radio and/or BT radio without WWAN
5. Time window transition between WLAN and BT when WWAN is in airplane mode (this segment of test is not needed for ICNIRP as both WLAN and BT operate in same time averaging window)
6. In transition when WWAN went from airplane mode to On.

Above Figure S-1 shows the above 6 transitions.

Test configuration selection criteria:

If the device supports simultaneous transmission of WWAN, WLAN and BT, then the selection criteria for system level compliance continuity test is:

- For a given DSI and antenna group, select band/antenna configurations for WWAN, WLAN and BT technologies that have the largest ($P_{max} – P_{limit}$) delta. In case of multiple bands/antennas having the same difference between P_{max} and P_{limit} within a given technology, then select any one band/antenna out of them.

Note: The antennas corresponding to the selected technologies/bands for the system level compliance continuity test case should be in the same antenna group.

For this test, WLAN radio configuration is selected different from 2.4GHz band so as to not interfere with BT measurements. Therefore, select least P_{limit} configuration for WLAN outside the 2.4GHz band.

This report shall not be reproduced except in full, without the written approval of UL Korea, Ltd.

Test procedure:

1. Measure conducted Tx power corresponding to P_{limit} for all three (WWAN, WLAN & BT) technologies in the selected radio configurations. Test condition to measure conducted P_{limit} for each tech is :

   - Establish device in call with the callbox for the first technology in desired band. Measure conducted Tx power corresponding to the first technology P_{limit} with Smart Transmit Peak exposure mode enabled and callbox set to request maximum power (or maximum duty cycle in case of WLAN/BT).

   - Repeat above step to measure conducted Tx power corresponding to the remaining two technologues' P_{limit}. In the case of BT, measured conducted Tx power is compensated by tested duty cycle and *BT_STANDALONE* EFS parameter, i.e., measured P_{limit} = conducted power measured in BT standalone condition / *BT_STANDALONE* / *BT_duty_cycle*.

   Note: (*BT_duty_cycle* compensation applies only to EFS version 20 (or lower). In EFS version 21, compensation is not required according to Qualcomm document (80-W5690-1).)

2. Set EUT to the intended Smart Transmit exposure mode.

3. As depicted in Figure S-1, first

   i. Section A: Establish WWAN connection with the callbox in selected WWAN radio configuration. Request EUT to transmit at 0 dBm for at least one WWAN time window (100s or 60s), followed by requesting EUT to transmit at maximum Tx power for {one WWAN time window (T_{WWAN} = 100s if f < 3GHz or 60s if 3GHz < f < 6GHz for FCC, 360s for ICNIRP) + the maximum high power duration allowed in one T_{WWAN}}, denoted as T_{A_WWAN}.

   ii. Section B: After T_{A_WWAN}, drop WWAN connection and establish WLAN connection with the callbox in selected WLAN radio configuration and request EUT to transmit at maximum duty cycle (and maximum power) for {one WLAN time-window duration (T_{WLAN} = 30s for all WLAN frequency bands for FCC, 360s for ICNIRP) + the maximum high power duration allowed in one T_{WLAN}}, denoted T_{B_WLAN}.

   iii. Section C: After T_{B_WLAN}, add the selected WWAN and BT radios to have the simultaneous transmission of WWAN + WLAN + BT. Request WWAN radio to transmit at maximum power and request WLAN & BT radios to transmit at maximum duty cycle (and maximum power) for at least one max {T_{A_WWAN}, T_{B_WLAN}, T_{BT}}, where, T_{BT} = 100s for FCC, 360s for ICNIRP.

   iv. Section D: Drop WWAN connection and set WWAN modem into airplane mode. Continue requesting WLAN & BT radios to transmit at maximum duty cycle (and maximum power) for at least two times the max { T_{WLAN}, T_{BT}}.

   v. Section E: Drop WLAN connection. Continue requesting BT radio to transmit at maximum duty cycle (and maximum power). Continue the test for at least one T_{BT}.

   vi. Section F: In the case of FCC time windows, after at least one T_{BT}, drop BT connection and establish back WLAN connection in selected radio configuration. Continue requesting WLAN radio to transmit at maximum duty cycle (and maximum power). Continue the test for at least one max { T_{WLAN}, T_{BT}}. In the case of ICNIRP time windows, Section F is not required.

   vii. Section G: Disable airplane mode and add WWAN and BT connections after Section F in the case of FCC time windows (Disable airplane mode and add WWAN and WLAN connections after Section E in the case of ICNIRP time windows) to have the simultaneous transmission of WWAN + WLAN + BT. Request WWAN radio to transmit at maximum power and request WLAN & BT radios to transmit at maximum duty cycle (and maximum power) for at least one max { T_{A_WWAN}, T_{B_WLAN}, T_{BT}}, where, T_{BT} = 100s for FCC, 360s for ICNIRP.

This report shall not be reproduced except in full, without the written approval of UL Korea, Ltd.

4. Once the measurement is done, extract instantaneous Tx power versus time for all WWAN, WLAN and BT radios in selected configurations. Similar to technology/band switch test in Section 3.3.3, convert the conducted Tx power for both these radios into 1g_or_10gSAR value (see Eq. (6a) and (6b)) using corresponding technology/band Plimit measured in Step 1, and then perform running average over corresponding time-windows (i.e., 100s/60s for WWAN radio, 30s for WLAN radio and 100s for BT radio in case of FCC time-windows, and 360s for all of them in case of ICNIRP time-windows) to determine time-averaged 1g_or_10gSAR versus time as illustrated in Figure A-1.

5. Make one plot containing: (a) computed normalized time-averaged 1g_or_10gSAR for WWAN radio configuration versus time determined in Step 4, (b) computed normalized time-averaged 1g_or_10gSAR for WLAN radio configuration versus time determined in Step 4, (c) computed normalized time-averaged 1g_or_10gSAR for BT radio configuration versus time determined in Step 4, (d) computed total normalized time-averaged 1g_or_10gSAR versus time (sum of Steps (5.a), (5.b)) determined in Step 5, and (e) corresponding normalized regulatory 1g_or_10gSAR$_{limit}$ limit of 1.0.

The validation criteria is, at all times, the time-averaged 1g_or_10gSAR versus time shall not exceed the regulatory 1g_or_10gSAR$_{limit}$ limit.

Note: If multi_Tx_factor is set to > 1.0 with EFS version 19 (or higher), then in single Tx transmission scenarios, Smart Transmit ensures time-averaged RF exposure is ≤ (*SAR_design_target* * $10^{(+\text{sub6 device uncertainty} / 10)}$) < regulatory RF exposure limit for sub6 radio managed by Smart Transmit.

In simultaneous Tx transmission scenarios, Smart Transmit ensures time-averaged RF exposure is ≤ (*SAR_design_target* * *multi_Tx_factor* * $10^{(+\text{sub6 device uncertainty} / 10)}$) < regulatory RF exposure limit for sub6 radios managed by Smart Transmit. These simultaneous transmission scenarios are listed below:

- 2-or-more radio scenarios within WWAN like EN-DC, LTE ULCA, etc.
- 2-or-more-radio across technologies such as WWAN+WLAN, WWAN+BT, WLAN+BT and WWAN+WLAN+BT transmission scenarios (if WLAN/BT radios are also managed by Smart Transmit).

<u>With EFS version 21 or higher:</u> multi_Tx factor also applies to multi-WLAN radio transmission scenarios (e.g., 2.4GHz + 5GHz). The applicability of multi_Tx_factor in other transmission scenarios is the same as EFS version 19.

3.3.9 Exposure Category Switch

This test is to demonstrate that Smart Transmit feature is accurately accounts for switching in exposures among SAR from radio1 only, SAR from both radio1 and radio2, and SAR from radio2 only scenarios, and ensures total time-averaged RF exposure complies with the FCC limit. The detailed test procedure for SAR exposure switching in the case of LTE + Sub6 NR non-standalone mode transmission scenarios is provided in Section.B.

This test is performed with the EUT being requested to transmit at maximum power in selected technology/band/antenna/DSI. The change in exposure category is preferably performed during Tx power enforcement (i.e., EUT forced to transmit at a sustainable level). One test is sufficient as this feature operation is independent of technology, band and antenna.

This report shall not be reproduced except in full, without the written approval of UL Korea, Ltd.

Test procedure:

In case of head to non-head to head exposure switch test, ‘first DSI’ in below test procedure refers to head DSI and ‘second DSI’ refers to non-head DSI. Similarly, in case of non-head to head to non-head exposure switch test, ‘first DSI’ in below test procedure refers to non-head DSI and ‘second DSI’ refers to head DSI.

1. Measure Plimit for all the technology(s)/band(s)/antenna(s)/DSI(s) selected following the above selection criteria. Measure Plimit with Smart Transmit Peak exposure mode enabled and callbox set to request maximum power.
2. Set EUT to intended Smart Transmit exposure mode.
3. Establish radio link with first DSI and with callbox in the selected technology(s)/band(s)/antenna(s).
4. Request EUT to transmit at 0 dBm for at least 100 seconds, followed by requesting EUT to transmit at maximum Tx power for the active radio(s) for half of the regulatory time window, and then switch to the second DSI for ~10s, and switch back to the first DSI for at least one time window. Throughout this test, when switching between DSIs (i.e., switching between exposure categories), continue with callbox requesting EUT to transmit at maximum Tx power for the active radio(s). Measure and record Tx power versus time for the entire duration of the test.
5. Once the measurement is done, extract instantaneous Tx power versus time, and convert the conducted Tx power into 1g_or_10gSAR value (see Eq. (3a) and (3b)) using the corresponding Plimit measured in Step 1 and 1g_or_10gSAR value measured in 80-W2112-4 Part 1 report, and then perform 100s running average to determine time-averaged 1g_or_10gSAR versus time as illustrated in Figure 5-1. Note that in Eq.(3a) & (3b), instantaneous Tx power is converted into instantaneous 1g_or_10gSAR value by applying the worst-case 1gSAR value for the selected technologies/bands at Plimit as reported in 80-W2112-4 Part 1 report.
6. Make one plot containing: (a) computed time-averaged normalized 1g_or_10gSAR of the selected technology(s)/band(s)/antenna(s) versus time determined in Step 5 for exposure under first DSI , (b) total time-averaged normalized exposure for exposure under first DSI if simultaneous transmission scenario was tested, and (c) normalized regulatory limit of 1.0.
7. Make another plot containing: (a) computed time-averaged 1g_or_10gSAR of the selected technology(s)/band(s)/antenna(s) versus time determined in Step 5 for exposure under second DSI, (b) total time-averaged normalized exposure for exposure under second DSI if simultaneous transmission scenario was tested, and (c) normalized regulatory limit of 1.0.

The validation criteria is, at all times, the time-averaged normalized exposure versus time shall not exceed the normalized limit of 1.0 for both first & second DSIs (i.e., both head exposure category and non-head exposure category).

This report shall not be reproduced except in full, without the written approval of UL Korea, Ltd.

4. Test Configurations

4.1. WWAN (sub-6) & WLAN/BT transmission

This P_{limit} values, corresponding to 1.0 or 2.5 W/kg (1-g or 10-g respectively) of *SAR_design_target*, for technologies and bands supported by EUT are derived in Sec.6.4 of 0/1 report and summarized in Table 4-1. Note all P_{limit} power levels entered in Table 5-1 correspond to average power levels plus tolerance after accounting for duty cycle in the case of TDD modulation schemes (for e.g., GSM, LTE TDD).

Table 4-1 : P_{limit} for supported technologies and bands (P_{limit} in EFS file)

Exposure conditions			Folder Close				Folder Open		P_{Max} (Maximum tune-up Power) (dBm)
			Body-worn	Hotspot	Product Specific 10-g SAR	Head (RCV)	Head (RCV)	Standalone	
Spatial-average			1g	1g	10g	1g	1g	1g	
Test distance (mm)			5	5 / 10	0	0	0	5	
DSI :			1			3	2	0	
RF Air Interface	Antenna	Antenna Group	P_{Limit} corresponding to 1.0 W/kg (SAR_design_target) (1g) / 2.5 W/kg (SAR_design_target) (10g)						
GSM 850	Ant.A	AG0	20.5	20.5	20.5	35.1	26.2	20.5	25.3
GSM 850	Ant.D	AG1	28.8	28.8	28.8	38.7	26.3	25.7	25.3
GSM 1900	Ant.B	AG0	17.8	17.8	17.8	33.8	31.2	17.8	22.1
WCDMA Band IV	Ant.B	AG0	18.0	18.0	18.0	31.7	33.9	18.0	23.5
WCDMA Band II	Ant.B	AG0	17.5	17.5	17.5	31.4	29.7	17.5	23.8
WCDMA Band V	Ant.A	AG0	20.5	20.5	20.5	33.5	30.8	20.5	24.5
WCDMA Band V	Ant.D	AG1	26.3	26.3	26.3	36.3	25.5	24.5	24.5
LTE Band 71	Ant.A	AG0	25.8	25.8	26.8	33.1	27.6	22.0	24.0
LTE Band 71	Ant.D	AG1	27.8	27.8	27.8	36.4	25.0	28.2	24.0
LTE Band 12	Ant.A	AG0	25.2	25.2	26.9	32.5	26.2	21.0	24.2
LTE Band 12	Ant.D	AG1	26.8	26.8	26.8	35.2	25.2	27.5	24.2
LTE Band 13	Ant.A	AG0	25.5	25.5	27.5	32.5	25.4	21.5	24.5
LTE Band 13	Ant.D	AG1	26.2	26.2	26.2	35.6	25.5	23.5	24.5
LTE Band 14	Ant.A	AG0	25.5	25.5	27.4	32.4	25.5	21.5	24.5
LTE Band 14	Ant.D	AG1	26.7	26.7	26.7	35.7	25.5	23.5	24.5
LTE Band 26(5)	Ant.A	AG0	25.5	25.5	26.3	32.4	25.5	20.5	24.5
LTE Band 26(5)	Ant.D	AG1	25.9	25.9	25.9	36.1	25.5	24.5	24.5
LTE Band 66(4)	Ant.B	AG0	18.0	18.0	18.0	32.7	34.8	18.0	24.0
LTE Band 66(4)	Ant.E	AG1	17.0	17.0	17.0	20.0	15.0	17.0	24.0
LTE Band 25(2)	Ant.B	AG0	17.5	17.5	17.5	32.1	30.5	17.5	24.0
LTE Band 25(2)	Ant.E	AG1	17.0	17.0	17.0	22.5	15.5	17.0	24.0
LTE Band 30	Ant.B	AG0	19.0	19.0	19.0	32.6	27.2	17.0	24.0
LTE Band 30	Ant.E	AG1	18.0	18.0	18.0	27.1	18.5	18.0	23.5
LTE Band 7	Ant.B	AG0	19.0	19.0	19.0	32.5	26.0	17.5	24.0
LTE Band 7	Ant.E	AG1	18.0	18.0	18.0	26.4	20.0	18.0	23.0
LTE Band 41(38)	Ant.B	AG0	18.0	18.0	18.0	33.1	28.1	18.0	22.0
LTE Band 41(38)	Ant.E	AG1	18.0	18.0	18.0	21.5	20.0	16.5	22.0
LTE Band 48	Ant.E	AG1	18.0	18.0	18.0	20.0	20.0	15.0	21.0
NR Band n71	Ant.A	AG0	25.0	25.0	26.0	32.9	28.1	22.0	24.0
NR Band n71	Ant.D	AG1	27.7	27.7	27.7	36.6	25.0	27.6	24.0
NR Band n12	Ant.A	AG0	23.5	23.5	23.5	32.3	25.4	20.5	24.0
NR Band n12	Ant.D	AG1	27.7	27.7	27.7	35.6	25.0	27.5	24.0
NR Band n14	Ant.A	AG0	26.5	26.5	30.7	34.2	26.4	23.0	24.0
NR Band n14	Ant.D	AG1	25.7	25.7	25.7	36.3	25.0	24.0	24.0
NR Band n26(5)	Ant.A	AG0	22.5	22.5	22.5	32.4	26.4	18.5	24.0
NR Band n26(5)	Ant.D	AG1	27.0	27.0	27.0	36.5	25.0	24.6	24.0
NR Band n7	Ant.B	AG0	19.0	19.0	19.0	33.7	20.0	19.0	23.0
NR Band n7	Ant.E	AG1	18.0	18.0	18.0	20.0	20.0	18.0	23.0
NR Band n66	Ant.B	AG0	18.0	18.0	18.0	32.9	43.2	18.0	24.0
NR Band n66	Ant.E	AG1	17.0	17.0	17.0	19.5	15.5	17.0	24.0
NR Band n25(2)	Ant.B	AG0	17.5	17.5	17.5	32.5	34.6	17.5	24.0
NR Band n25(2)	Ant.E	AG1	17.0	17.0	17.0	19.5	17.0	17.0	24.0
NR Band n30	Ant.B	AG0	19.0	19.0	19.0	33.8	28.5	17.5	23.0
NR Band n30	Ant.E	AG1	18.0	18.0	18.0	18.5	18.5	18.0	23.0
NR Band n70	Ant.B	AG0	19.5	19.5	19.5	34.3	35.8	19.5	23.5
NR Band n70	Ant.E	AG1	17.0	17.0	17.0	19.0	17.5	17.0	23.5
NR Band n41(38) SRS1 PC2	Ant.B	AG0	18.0	18.0	18.0	32.9	20.0	18.0	26.0
NR Band n41 SRS 2 PC2	Ant.E	AG1	18.0	18.0	18.0	32.7	25.2	18.0	25.0
NR Band n41 SRS 3 PC2	Ant.C	AG0	15.0	15.0	15.0	15.0	15.0	15.0	20.5
NR Band n41 SRS 4 PC2	Ant.I	AG1	15.0	15.0	15.0	15.0	15.0	15.0	19.0
NR Band n41(38) SRS1 PC2 Switching	Ant.E	AG1	18.0	18.0	18.0	N/A	N/A	18.0	26.0
NR Band n41 SRS 2 PC2 - Switching	Ant.B	AG0	18.0	18.0	18.0	39.4	27.9	18.0	19.5
NR Band n41 SRS 3 PC2 - Switching	Ant.I	AG1	15.0	15.0	15.0	15.0	15.0	15.0	19.5
NR Band n41 SRS 4 PC2 - Switching	Ant.C	AG0	15.0	15.0	15.0	15.0	15.0	15.0	21.0
NR Band n48 SRS 1	Ant.E	AG1	18.5	18.5	18.5	20.5	17.5	15.5	23.0
NR Band n48 SRS 2	Ant.C	AG0	21.3	21.3	22.6	40.3	26.6	18.5	17.5
NR Band n48 SRS 3	Ant.F	AG1	15.5	15.5	15.5	15.5	15.5	12.5	22.0
NR Band n48 SRS 4	Ant.A	AG0	15.5	15.5	15.5	15.5	15.5	15.5	19.5
NR Band n77(78) SRS 1 PC2	Ant.E	AG1	16.5	16.5	16.5	20.5	16.0	14.0	26.0
NR Band n77(78) SRS 2 PC2	Ant.C	AG0	15.5	15.5	15.5	15.5	15.5	15.5	19.0
NR Band n77(78) SRS 3 PC2	Ant.F	AG1	15.0	15.0	15.0	15.0	15.0	15.0	25.0
NR Band n77(78) SRS 4 PC2	Ant.A	AG0	15.5	15.5	15.5	15.5	15.5	15.5	21.5

This report shall not be reproduced except in full, without the written approval of UL Korea, Ltd.

Exposure conditions			Folder Close				Folder Open		P_{Max} (Maximum tune-up Power) (dBm)
			Body-worn	Hotspot	Product Specific 10-g SAR	Head (RCV)	Head (RCV)	Standalone	
Spatial-average			1g	1g	10g	1g	1g	1g	
Test distance (mm)			5	5 / 10	0	0	0	5	
DSI :			1			3	2	0	
RF Air Interface	Antenna	Antenna Group	P_{Limit} corresponding to 1.0 W/kg (SAR_design_target) (1g) / 2.5 W/kg (SAR_design_target) (10g)						
Bluetooth SISO Ant.1	Ant. G	AG1	17.2	17.2	17.2	36.4	21.4	17.2	19.5
Bluetooth SISO Ant.2	Ant. F	AG1	17.2	17.2	17.2	27.8	23.1	17.2	19.5
Bluetooth MIMO 1	Ant. G+F	AG1	18.6	18.6	18.6	25.3	17.3	17.8	13.5
Bluetooth MIMO 2	Ant. G+F	AG1	18.6	18.6	18.6	26.9	17.3	19.3	15.5
DTS SISO Ant. 1	Ant. G	AG1	16.0	16.0	16.0	35.4	20.8	16.0	19.0
DTS SISO Ant. 2	Ant. F	AG1	16.0	16.0	16.0	26.8	21.0	16.0	19.0
DTS MIMO	Ant. G+F	AG1	16.0	16.0	16.0	26.3	20.8	16.0	17.0
UNII-2A SISO Ant. 1	Ant. E	AG1	15.5	15.5	15.5	25.7	18.5	15.5	17.5
UNII-2A SISO Ant. 2	Ant. H	AG1	15.5	15.5	15.5	28.8	23.6	15.5	17.5
UNII-2A MIMO	Ant. E+H	AG1	15.5	15.5	15.5	24.7	17.7	15.5	17.5
UNII-2C SISO Ant. 1	Ant. E	AG1	15.5	15.5	15.5	25.3	17.8	15.5	17.5
UNII-2C SISO Ant. 2	Ant. H	AG1	15.5	15.5	15.5	34.0	25.4	15.5	17.5
UNII-2C MIMO	Ant. E+H	AG1	15.5	15.5	15.5	25.0	18.2	15.5	17.5
UNII-3 SISO Ant. 1	Ant. E	AG1	15.5	15.5	15.5	27.0	19.2	15.5	17.5
UNII-3 SISO Ant. 2	Ant. H	AG1	15.5	15.5	15.5	35.2	23.6	15.5	17.5
UNII-3 MIMO	Ant. E+H	AG1	15.5	15.5	15.5	24.8	18.1	15.5	17.5
UNII-4 SISO Ant. 1	Ant. E	AG1	15.5	15.5	15.5	24.8	19.5	15.5	17.5
UNII-4 SISO Ant. 2	Ant. H	AG1	15.5	15.5	15.5	35.4	20.3	15.5	17.5
UNII-4 MIMO	Ant. E+H	AG1	15.5	15.5	15.5	25.1	18.9	15.5	17.5
WIFI 6E SISO Ant. 1	Ant. E	AG1	10.0	10.0	10.0	10.0	10.0	10.0	16.0
WIFI 6E SISO Ant. 2	Ant. H	AG1	10.0	10.0	10.0	10.0	10.0	10.0	16.0
WIFI 6E MIMO	Ant. E+H	AG1	10.0	10.0	10.0	10.0	10.0	10.0	16.0

* Maximum Tune-up Target Power, P_{max} is configured in NV settings in DUT to limit maximum average transmitting power. The DUT maximum allowed output power is equal to P_{max} + 1.0 dB device uncertainty.

The technologies/bands selected for testing, listed in Table 4-2 are highlighted in Table 4-1. During Part 2 testing, the *Reserve_power_margin* (dB) is set in EFS according to the manufacturer guide.

As Part 1 and Part 2 testing took place in parallel the selected technologies/bands were chosen based upon anticipated values encountered during pretesting before Tx powers were finalized.

The radio configurations used in Part 2 test for selected technologies, bands, DSIs and antennas are listed in Table 4-2. The corresponding worst-case radio configuration 1g SAR or 10g SAR values for selected technology/band/DSI are extracted from Part 1 report and are listed in the last column of Table 4-2.

Based on equations (1a), (2a), (3a) and (4a), it is clear that Part 2 testing outcome is normalized quantity, which implies that it can be applied to any radio configuration within a selected technology/band/DSI. Thus, as long as applying the worst-case SAR obtained from the worst radio configuration in Part 1 testing to calculate time-varying SAR exposure in equations (1a), (2a), (3a) and (4a), the accuracy in compliance demonstrate remains the same.

If DSI's Plimit is higher than Pmax, then Plimit is operate as Pmax power.

This report shall not be reproduced except in full, without the written approval of UL Korea, Ltd.

Table 4-2 : WWAN/WLAN/BT Radio configurations selected for Part 2 test

Test Case	Test Scenario	Tech	Band	Ant.	DSI	Channel	Freq. (MHz)	RB/RB Offset /Bandwidth (MHz)	Mode	SAR Exposure Scenario	Part 1 Worst configuration		
											Test configuration	Part1 Measured SAR	Part1 Reported SAR
1	Test Sequence 1	GSM	1900	B	0	661	1880.0	-	GPRS 4 slots	Standalone	Bottom - 5mm	0.944	1.216
	Test Sequence 2												
2	Test Sequence 1	WCDMA	2	B	0	9400	1880.0	-	Rel 99	Standalone	Bottom - 5mm	0.921	1.234
	Test Sequence 2												
3	Test Sequence 1	LTE	B48	E	0	56640	3690.0	1/0/20 MHz	QPSK	Standalone	Top - 5mm	0.867	1.183
	Test Sequence 2												
4	Test Sequence 1	NR	Bn77 (pc2)	E	0	662000	3930.0	1/271/100 MHz	DFT-s OFDM QPSK	Standalone	Top - 5mm	0.878	0.930
	Test Sequence 2												
5	Change in Call	NR	Bn77 (pc2)	E	0	662000	3930.0	1/271/100 MHz	DFT-s OFDM QPSK	Standalone	Top - 5mm	0.878	0.930
6	DSI Switch	LTE	B48	E	1	56640	3690.0	1/99/20 MHz	QPSK	Bodyworn & Hotspot	Rear - 5mm	0.612	0.788
					0	56640	3690.0	1/0/20 MHz	QPSK	Standalone	Top - 5mm	0.867	1.183
7	Tech/Band Switch	LTE	B71	A	0	133297	680.5	1/49/20 MHz	QPSK	Standalone	Right - 5mm	0.982	1.040
		WCDMA	5	A	0	4132	826.4	-	Rel 99	Standalone	Right - 5mm	0.939	0.997
8	Time Window Switch Antenna Switch	LTE	B12	D	0	23095	707.5	1/0/10 MHz	QPSK	Standalone	Right - 5mm	0.416	0.569
		LTE	B48	E	0	56640	3690.0	1/0/20 MHz	QPSK	Standalone	Top - 5mm	0.867	1.183
9	SAR1 vs SAR2 (EN-DC)	LTE	B12	A	1	23095	707.5	1/25/10 MHz	QPSK	Bodyworn & Hotspot	Rear - 5mm	0.986	1.140
		NR	Bn25	B	1	376500	1882.5	1/107/40 MHz	DFT-s OFDM QPSK	Bodyworn & Hotspot	Rear - 5mm	0.459	0.571
10	Time-varying (test sequence 1)	WLAN	5GHz	E	0	138	5690.0	80MHz	802.11ac	Standalone	Rear-5mm	0.995	1.193
11	DBS SAR vs SAR	WLAN	2.4GHz	G	0	6	2437.0	20 MHz	802.11n	Standalone	Rear-5mm	0.476	0.508
		WLAN	5GHz	E	0	149	5745.0	20 MHz	802.11ac	Standalone	Rear-5mm	0.688	0.922
12	System Level Compliance Continuity	LTE	B25	E	0	26140	1860.0	1/49/20 MHz	QPSK	Standalone	Top - 5mm	0.910	1.028
		WLAN	5GHz	E	0	149	5745.0	20 MHz	802.11ac	Standalone	Rear-5mm	0.688	0.922
		BT	BT	G	0	0	2402.0	-	EDR	Standalone	Right - 5mm	0.157	0.220
13	Exposure Category Switch	NR	Bn30	E	3	462000	2310.0	1/1/10 MHz	DFT-s OFDM QPSK	Head	Left Tilt - 0mm	0.128	0.148
					1	462000	2310.0	1/1/10 MHz	DFT-s OFDM QPSK	Bodyworn & Hotspot	Rear - 5mm	0.380	0.441

This report shall not be reproduced except in full, without the written approval of UL Korea, Ltd.

Reported SAR values in Part 1 SAR report are tested at P_{limit} + tolerance. Therefore, 100s(or 60s) average SAR is shown to be ± 1.0 dB from SAR design target of WWAN bands.

Based on the selection criteria described in Section 3.2, the radio configurations for the Tx varying transmission test cases listed in Section 2 are:

1. Technologies and bands for time-varying Tx power transmission: The test case 1 ~ 4 listed in Table 4-2 are selected to test with the test sequences defined in Section 3.1 in time-varying conducted power measurement.
2. Technology and band for change in call test: Based on selection criteria in Section 3.2.2, NR Band n77 having the lowest P_{limit} among all technologies and bands (test case 5 in Table 4-2) is selected for performing the call drop test in conducted power setup.
3. Technologies and bands for change in DSI: Based on selection criteria in Section 3.2.5, for a giver technology and band, test case 6 in Table 4-2 is selected for DSI switch test by establishing a call in LTE Band 48 in DSI=1, and then handing over to DSI=0 exposure scenario in conducted power setup.
4. Technologies and bands for change in technology/band test: Following the guidelines in Section 3.2.3, test case 7 in Table 4-2 is selected for handover test from a technology/band in within one technology group (LTE Band 71, DSI=0, Ant. A), to a technology/band in the same DSI within another technology group (WCDMA Band 5, DSI=0, Ant. A) in conducted power setup.
5. Technologies and bands for change in time-window/antenna: Based on selection criteria in Section 3.2.4 and Section 3.2.6 for a given in DSI =0, test case 8 in Table 4-2 is selected for time window switch between 100s window(LTE Band 12, DSI=0, Ant. D) and 60s window (LTE Band 48, DSI=0, Ant. E) in conducted power setup.
6. Technologies and bands for switch in SAR exposure (EN-DC): Based on selection criteria in Section 3.2.7, test case 9 in Table 4-2 is selected for SAR exposure switching test in one of the supported simultaneous WWAN transmission scenario, i.e., LTE + Sub6 NR active in the same 100s time window, in conducted power setup.
7. Technologies and bands for change in Exposure category: Based on selection criteria in Section 3.2.9, for a given technology and band, test case 13 in Table 4-2 is selected for exposure category switch from Head DSI(NR Band n30, DSI=3, Ant. E) to non-Head DSI(NR Band n30, DSI=1, Ant. E) and vice versa, in conducted power setup.

Reported SAR values in Part 1 SAR report are tested at P_{limit} + tolerance. Therefore, 30s average SAR is shown to be ± 1.0 dB from SAR design target of WLAN bands.

Based on the selection criteria described in Section 3.2, the radio configurations for the Tx varying transmission test cases listed in Section 2 are:

8. Technologies and bands for time-varying Tx power transmission: The test case 10 listed in Table 4-2 are selected to test with the test sequences defined in Section 3.1 in time-varying conducted power measurement.
9. Technologies and bands for switch in SAR exposure (DBS): Based on selection criteria in Section 3.2.7, test case 11 in Table 4-2 is selected for SAR exposure switching test in one of the supported simultaneous WLAN transmission scenario, i.e., DBS(2.4GHz Radio+5GHz Radio) active in the same 30s time window, in conducted power setup.
10. System Level Compliance Continuity test (WWAN+WLAN+BT): Based on selection criteria in Section 3.2.8, test case 12 in Table 4-2 is selected for System Level Compliance Continuity test in one of the supported simultaneous WWAN+WLAN+BT transmission scenario.

This report shall not be reproduced except in full, without the written approval of UL Korea, Ltd.

5. Conducted Power Test Results for Sub-6 Smart Transmit Feature Validation

5.1. Measurement setup

WWAN Bands Measurement setup

GSM / WCDMA / LTE test setup using The Rohde & Schwarz CMW500 callbox

The Rohde & Schwarz CMW500 callbox is used in this test.

Test setup Schematic	Test item(s)	Description(s)	Test setup photo
Figure B-1(a)	Time-varying Tx power transmission test (Section 3.3.1)	Single antenna measurement, one port(RF1 COM) of callbox	A.1
	Change in DSI test (Section 3.3.5)		
	Change in tech/band test (Section 3.3.3)		
Figure B-1(b)	Change in time window test (Section 3.3.6)	Two antenna measurement, one port(RF1 COM) of callbox	A.2
	Change in antenna test (Section 3.3.4)		

Sub6 NR(SA mode) / LTE + Sub6 NR(NSA mode) test setup using The UXM callbox

The UXM callbox is used in this test.

Test setup Schematic	Test item(s)	Description(s)	Test setup photo
Figure B-1(a)	Time-varying Tx power transmission test (Section 3.3.1)	Single antenna measurement, One port(RF1 COM) of callbox	A.3
	Change in call scenario test (Section 3.3.2)		
	Exposure category switch test (Section 3.3.9)		
Figure B-1(c)	SAR exposure switch test (EN-DC) (Section 3.3.7)	Two antenna measurement, two ports(RF1 & RF8 COM) of callbox	A.4

All the path losses from RF port of DUT to the callbox RF COM port and to the power meter are calibrated and automatically entered as offsets in the callbox and the power meter via test scripts on the PC used to control callbox and power meter.

Setup photos of Test setup Schematic are list in Appendix A.

This report shall not be reproduced except in full, without the written approval of UL Korea, Ltd.

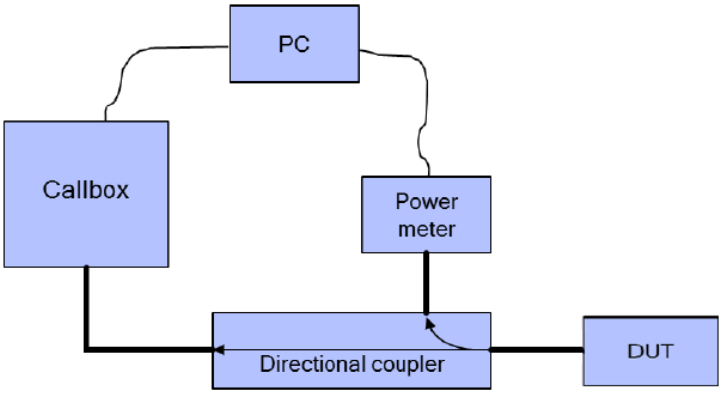

Figure B-1 (a)

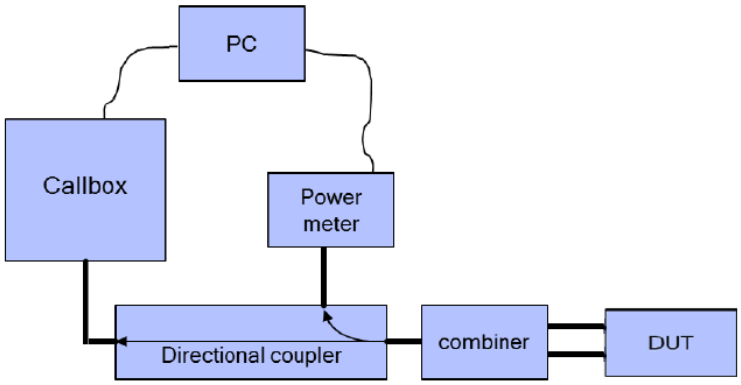

Figure B-1 (b)

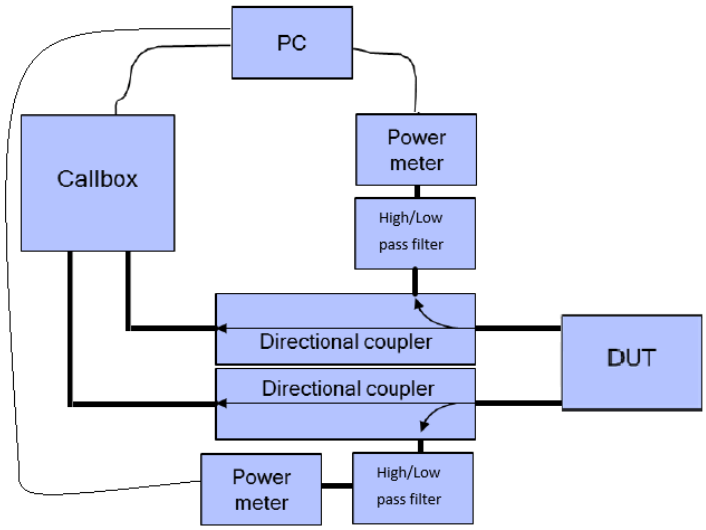

Figure B-1 (c)

This report shall not be reproduced except in full, without the written approval of UL Korea, Ltd.

WLAN Bands Measurement setup

WLAN test setup using The Rohde & Schwarz CMW500 callbox

The Rohde & Schwarz CMW500 callbox is used in this test.

Test setup Schematic	Test item(s)	Description(s)	Test setup photo
Figure C-1(a)	Time-varying Tx power transmission test (Section 3.3.1)	Two antenna measurement, two port (RF1 & RF3 COM) of callbox	**A.5**
Figure C-1(b)	SAR exposure switch test (DBS) (Section 3.3.7)	Three antenna measurement, three port (RF1 & RF 3 & RF4 COM) of callbox	**A.6**
Figure C-1(c)	System level compliance continuity (Section 3.3.8)	Two antenna measurement, two port (RF1 & RF3 COM) of callbox	**A.7**

All the path losses from RF port of DUT to the callbox RF COM port and to the power meter are calibrated and automatically entered as offsets in the callbox and the power meter via test scripts on the PC used to control callbox and power meter.

Setup photos of Test setup Schematic are list in Appendix A.

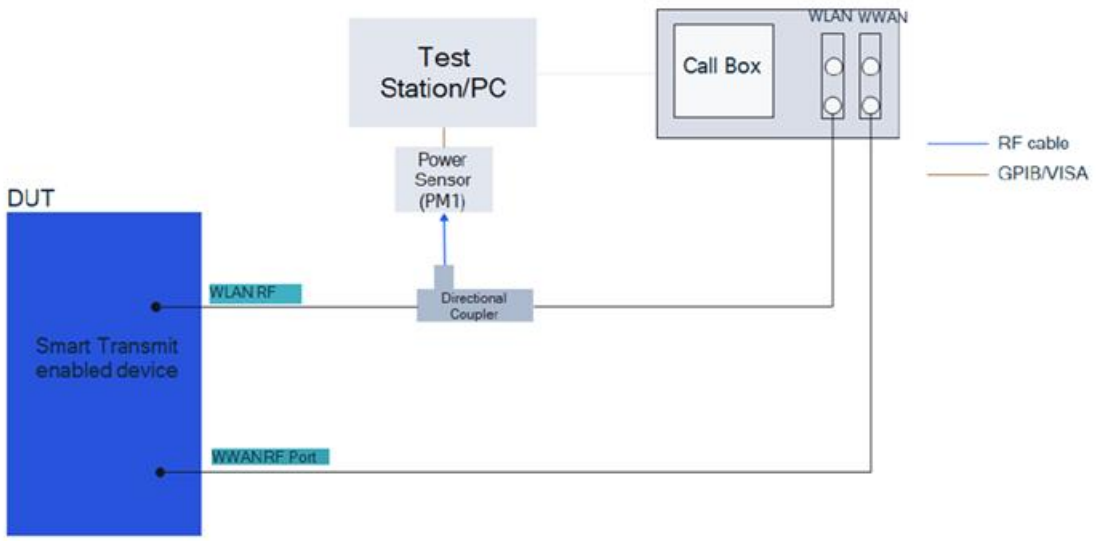

Figure C-1 (a)

This report shall not be reproduced except in full, without the written approval of UL Korea, Ltd.

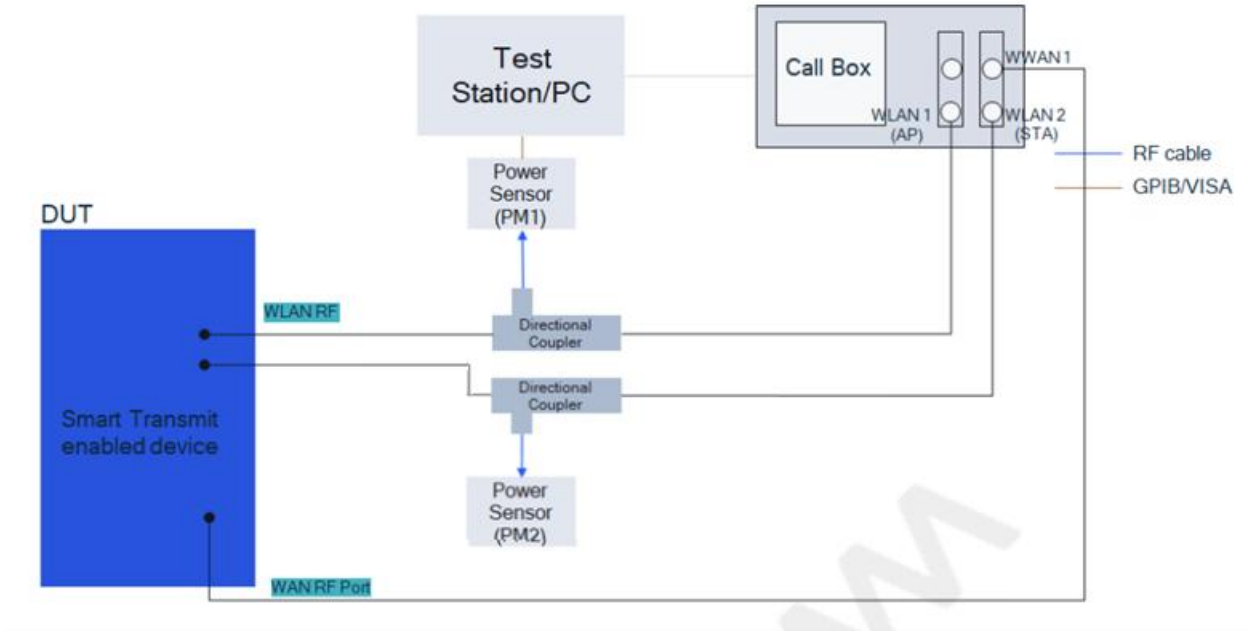

Figure C-1 (b)

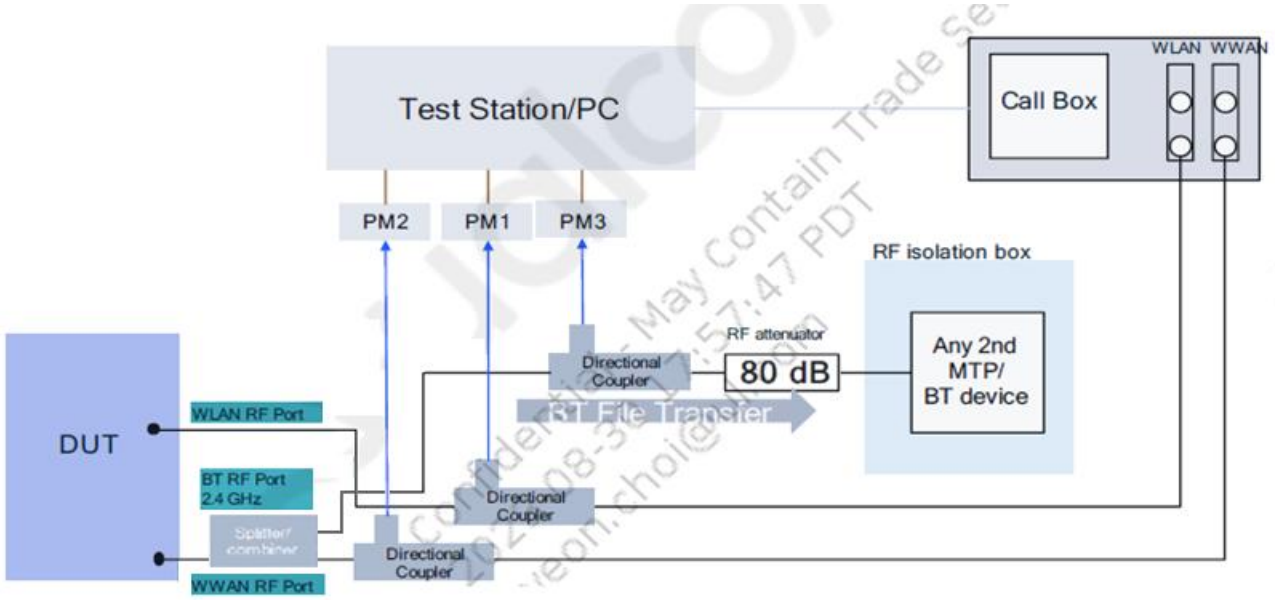

Figure C-1 (c)

This report shall not be reproduced except in full, without the written approval of UL Korea, Ltd.

Both the callbox and power meter are connected to the PC using LAN port. Two test scripts are custom made for automation, and the test duration set in the test scripts is about 500 seconds. For time-varying Tx power measurement, the PC runs the 1st test script to send LAN commands to control the callbox's requested power versus time, while at the same time to record the conducted power measured at EUT RF port using the power meter. The commands sent to the callbox to request power are:

WWAN Band measurement

- 0 dBm for 100 seconds
- Test sequence 1 or test sequence 2 (defined in Section 3.1 and generated in Section 3.2.1), For 360 seconds
- Stay at the last power level of test sequence 1 or sequence 2 for the remaining time.

WLAN Band measurement

- 0 dBm for 100 seconds
- Test sequence #1 (defined in Section 3.1 and generated in Section 3.2.1), For 200 seconds
- Stay at the last power level of test sequence #1 for the remaining time.

Power meter readings are periodically recorded every 100ms. A running average of this measured Tx power over 100 seconds is performed in the post-data processing to determine the 100s-time averaged power of WWAN Bands (the 30s-time averaged power of WLAN Bands).

For call drop, technology/band/antenna switch, and DSI switch tests, after the call is established, the callbox is set to request the EUT's Tx power at 0dBm for 100 seconds while simultaneously starting the 2nd test script runs at the same time to start recording the Tx power measured at EUT RF port using the power meter. After the initial 100 seconds since starting the Tx power recording, the callbox is set to request maximum power from the EUT for the rest of the test. Note that the call drop/re-establish, or technology/band/antenna switch or DSI switch is manually performed when the Tx power of EUT is at $P_{reserve}$ level. See Section 3.3 for detailed test procedure of call drop test, technology/band/antenna switch test and DSI switch test.

This report shall not be reproduced except in full, without the written approval of UL Korea, Ltd.

5.2. P_{limit} and P_{max} measurement results

This measured Plimit for all the selected radio configurations given in Table 4-2 are listed in below Table 5-1. Pmax was also measured for radio configurations selected for testing time-varying Tx power transmission scenarios in order to generate test sequences following the test procedures in Section 3.1.

Table 5-1 : Measured P_{limit} and P_{max} of selected Radio configurations

Note: the device uncertainty of P_{max} is +1.0dB/-1.5dB as provided by manufacturer.

Test Case	Test Scenario	Tech	Band	Ant.	DSI	Channel	Freq. (MHz)	RB/RB Offset /Bandwidth (MHz)	Mode	SAR Exposure Scenario	Part 1 Worst configuration			Plimit (dBm)	measured Plimit (dBm)	Tune-up Pmax (dBm)	Measured Pmax (dBm)
											Test configuration	Part1 Measured SAR	Part1 Reported SAR				
1	Test Sequence 1	GSM	1900	B	0	661	1880.0	-	GPRS 4 slots	Standalone	Bottom - 5mm	0.944	1.216	17.8	17.93	21.3	20.69
	Test Sequence 2																
2	Test Sequence 1	WCDMA	2	B	0	9400	1880.0	-	Rel 99	Standalone	Bottom - 5mm	0.921	1.234	17.5	17.77	23.8	23.90
	Test Sequence 2																
3	Test Sequence 1	LTE	B48	E	0	56640	3690.0	1/0/20 MHz	QPSK	Standalone	Top - 5mm	0.867	1.183	15.0	15.52	21.0	21.23
	Test Sequence 2																
4	Test Sequence 1	NR	Bn77 (pc2)	E	0	662000	3930.0	1/271/100 MHz	DFT-s OFDM QPSK	Standalone	Top - 5mm	0.878	0.930	14.0	14.69	22.1	20.89
	Test Sequence 2																
5	Change in Call	NR	Bn77 (pc2)	E	0	662000	3930.0	1/271/100 MHz	DFT-s OFDM QPSK	Standalone	Top - 5mm	0.878	0.930	14.0	14.69	22.1	20.89
6	DSI Switch	LTE	B48	E	1	56640	3690.0	1/99/20 MHz	QPSK	Bodyworn & Hotspot	Rear - 5mm	0.612	0.788	18.0	18.54	21.0	21.23
					0	56640	3690.0	1/0/20 MHz	QPSK	Standalone	Top - 5mm	0.867	1.183	15.0	15.52	21.0	21.23
7	Tech/Band Switch	LTE	B71	A	0	133297	680.5	1/49/20 MHz	QPSK	Standalone	Right - 5mm	0.982	1.040	22.0	21.88	24.0	23.88
		WCDMA	5	A	0	4132	826.4	-	Rel 99	Standalone	Right - 5mm	0.939	0.997	20.5	20.57	24.5	24.47
8	Time Window Switch Antenna Switch	LTE	B12	D	0	23095	707.5	1/0/10 MHz	QPSK	Standalone	Right - 5mm	0.416	0.569	24.2	24.14	24.2	24.15
		LTE	B48	E	0	56640	3690.0	1/0/20 MHz	QPSK	Standalone	Top - 5mm	0.867	1.183	15.0	15.52	21.0	21.23
9	SAR1 vs SAR2 (EN-DC)	LTE	B12	A	1	23095	707.5	1/25/10 MHz	QPSK	Bodyworn & Hotspot	Rear - 5mm	0.986	1.140	24.2	23.80	24.2	23.81
		NR	Bn25	B	1	376500	1882.5	1/107/40 MHz	DFT-s OFDM QPSK	Bodyworn & Hotspot	Rear - 5mm	0.459	0.571	17.5	17.82	24.0	24.21
10	Time-varying (test sequence 1)	WLAN	5GHz	E	0	138	5690.0	80MHz	802.11ac	Standalone	Rear-5mm	0.995	1.193	15.5	14.65	17.0	16.28
11	DBS SAR vs SAR	WLAN	2.4GHz	G	0	6	2437.0	20 MHz	802.11n	Standalone	Rear-5mm	0.476	0.508	16.0	15.62	17.0	16.73
		WLAN	5GHz	E	0	149	5745.0	20 MHz	802.11ac	Standalone	Rear-5mm	0.688	0.922	15.5	14.54	17.5	16.47
12	System Level Compliance Continuity	LTE	B25	E	0	26140	1860.0	1/49/20 MHz	QPSK	Standalone	Top - 5mm	0.910	1.028	17.0	16.63	24.0	23.81
		WLAN	5GHz	E	0	149	5745.0	20 MHz	802.11ac	Standalone	Rear-5mm	0.688	0.922	15.5	14.54	17.5	16.47
		BT	BT	G	0	0	2402.0	-	EDR	Standalone	Rear - 5mm	0.157	0.220	15.5	14.55		
13	Exposure Category Switch	NR	Bn30	E	3	462000	2310.0	1/1/10 MHz	DFT-s OFDM QPSK	Head	Left Tilt - 0mm	0.128	0.148	18.5	18.89	23.0	23.42
					1	462000	2310.0	1/1/10 MHz	DFT-s OFDM QPSK	Bodyworn & Hotspot	Rear - 5mm	0.380	0.441	18.0	18.29	23.0	23.42
Multi _Tx factor												1.1					

BT Plimit calculation Results

Bluetooth (DSI 0)	
Measured_BT_power (as measured test tree)	14.33
BT_STANDALONE	0.95
Measured BT Plimit (dBm)	14.55

Notes:

1. For GSM, LTE/NR TDD Bands, Tests including duty-cycle transmit are normalized to frame average.
2. NR TDD Pmax and Plimit are measured at 40% duty cycle in call box.
3. BT Plimit calculation follows Sec.9.9.5 in Qualcomm document (80-W5690-1).
4. For Test Scenario.12 (System Level Compliance Continuity), BT mode was connected EDR mode during test. Therefore, Plimit was measured at EDR mode.

This report shall not be reproduced except in full, without the written approval of UL Korea, Ltd.

5.3. Time-varying Tx power measurement results (test case 1- 4 &10 in Table 5-1)

The measured P_{max} and measured P_{limit} of each selected radio configuration are used for generation of test sequences following the test plan in Section 3.3.1. The purpose of the time varying transmit power measurement is to demonstrate the effectiveness of power limiting enforcement and that the time averaged transmit power when converted into 1gSAR values does not exceed the regulatory limit.

The conducted Tx power measurement results after following the test procedure in Section 3.3.1 for all technologies and bands listed in Table 5-1 are reported in this section. In all the 1gSAR Plots, the green curve represents the 100s/60s/30s-time averaged 1g/10g SAR value calculated based on conducted Tx power measurement; and the red line limit represents the regulatory limit of 1.6W/kg/4.0W/kg.

As can be seen, the power limiting enforcement is effective in all the tests, and the time-averaged 1g/10g SAR does not exceed the regulatory limit of 1.6W/kg/4.0W/kg for all the tested technologies/bands. Therefore, Smart Transmit time averaging feature is validated.

This report shall not be reproduced except in full, without the written approval of UL Korea, Ltd.

5.3.1. GSM Band 1900

Test parameters

Parameters	Values
Tech/band/antenna/DSI	GSM 1900/Ant.B/DSI 0
meas. P_{max}	20.69 dBm
meas. P_{limit}	17.93 dBm
Meas. 1gSAR at P_{limit}	0.944 W/kg
Time window	100 s
Test setup schematic	Figure B-1(a)

Test result for test sequence 1:

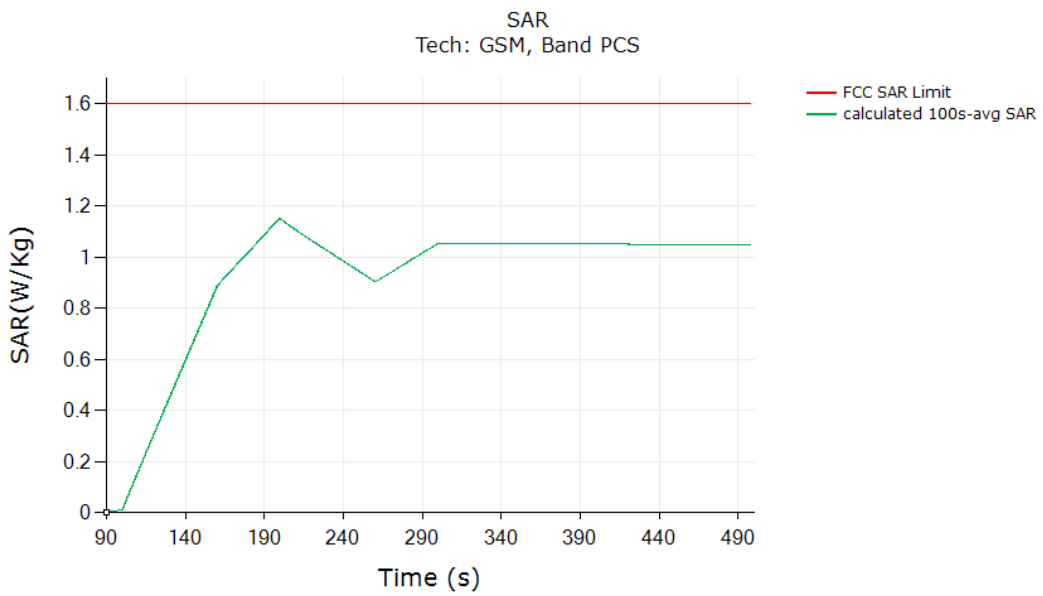

Test result for test sequence 2:

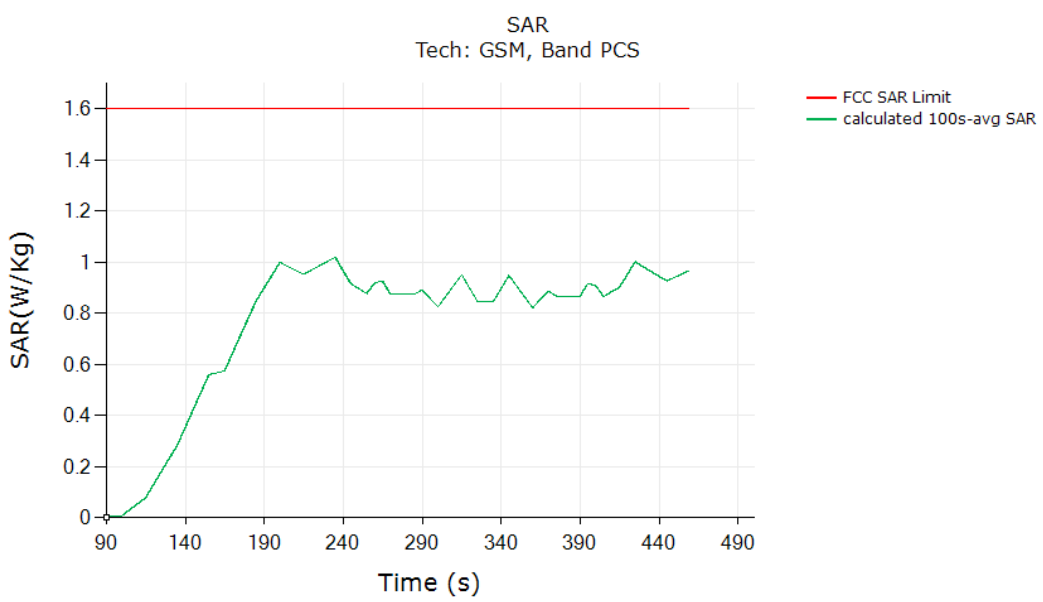

	Test Seq 1	Test Seq 2	(W/kg)
Max 100s-time averaged 1gSAR (green curve)	1.153	1.019	
Validated.			

This report shall not be reproduced except in full, without the written approval of UL Korea, Ltd.

5.3.2. WCDMA Band II

Test parameters

Parameters	Values
Tech/band/antenna/DSI	WCDMA 2/Ant.B/DSI 0
meas. P_{max}	23.90 dBm
meas. P_{limit}	17.77 dBm
Meas. 1gSAR at P_{limit}	0.921 W/kg
Time window	100 s
Test setup schematic	Figure B-1(a)

Test result for test sequence 1:

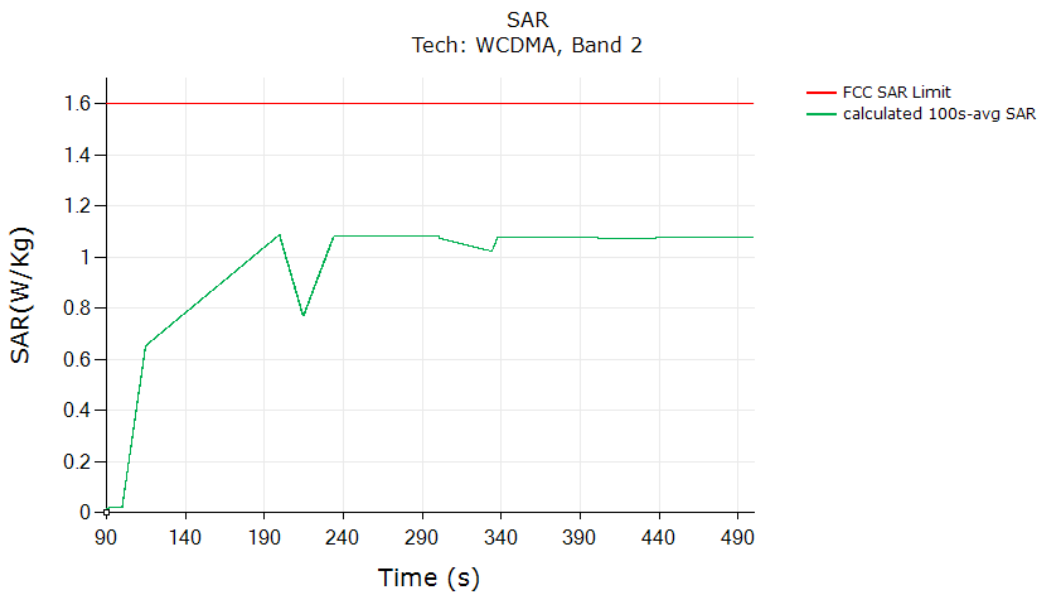

Test result for test sequence 2:

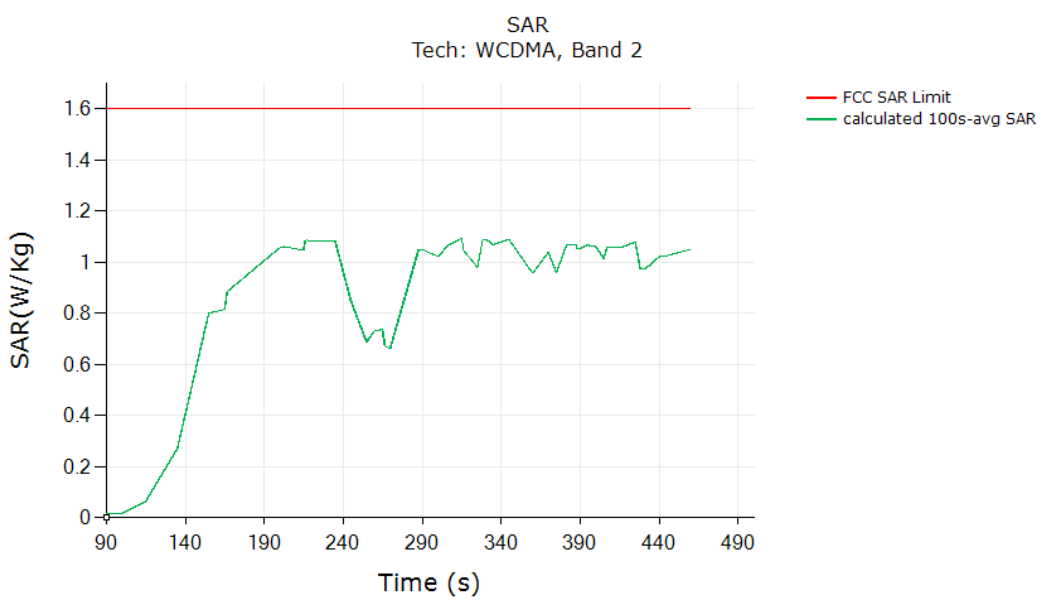

	Test Seq 1	Test Seq 2	(W/kg)
Max 100s-time averaged 1gSAR (green curve)	1.088	1.092	
Validated.			

This report shall not be reproduced except in full, without the written approval of UL Korea, Ltd.

5.3.3. LTE Band 48

Test parameters

Parameters	Values
Tech/band/antenna/DSI	LTE B48/Ant.E/DSI 0
meas. P_{max}	21.23 dBm
meas. P_{limit}	15.52 dBm
Meas. 1gSAR at P_{limit}	0.867 W/kg
Time window	60 s
Test setup schematic	Figure B-1(a)

Test result for test sequence 1:

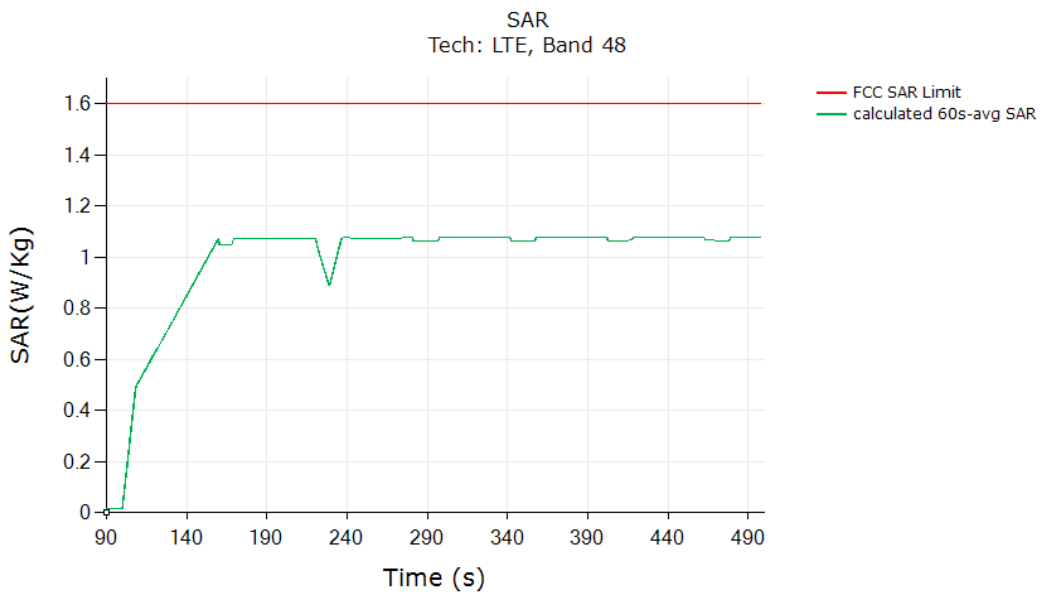

Test result for test sequence 2:

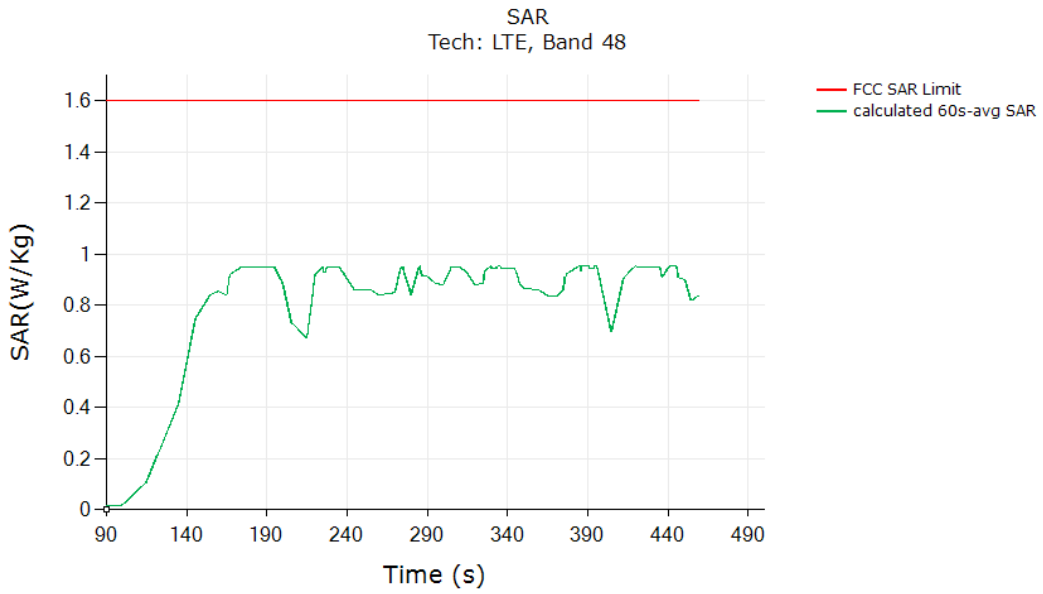

	Test Seq 1	Test Seq 2	(W/kg)
Max 60s-time averaged 1gSAR (green curve)	1.078	0.955	
Validated.			

This report shall not be reproduced except in full, without the written approval of UL Korea, Ltd.

5.3.4. NR Band n77

Test parameters

Parameters	Values
Tech/band/antenna/DSI	NR Bn77/Ant.E/DSI 0
meas. P_{max}	20.89 dBm
meas. P_{limit}	14.69 dBm
Meas. 1gSAR at P_{limit}	0.878 W/kg
Time window	60 s
Test setup schematic	Figure B-1(a)

Test result for test sequence 1:

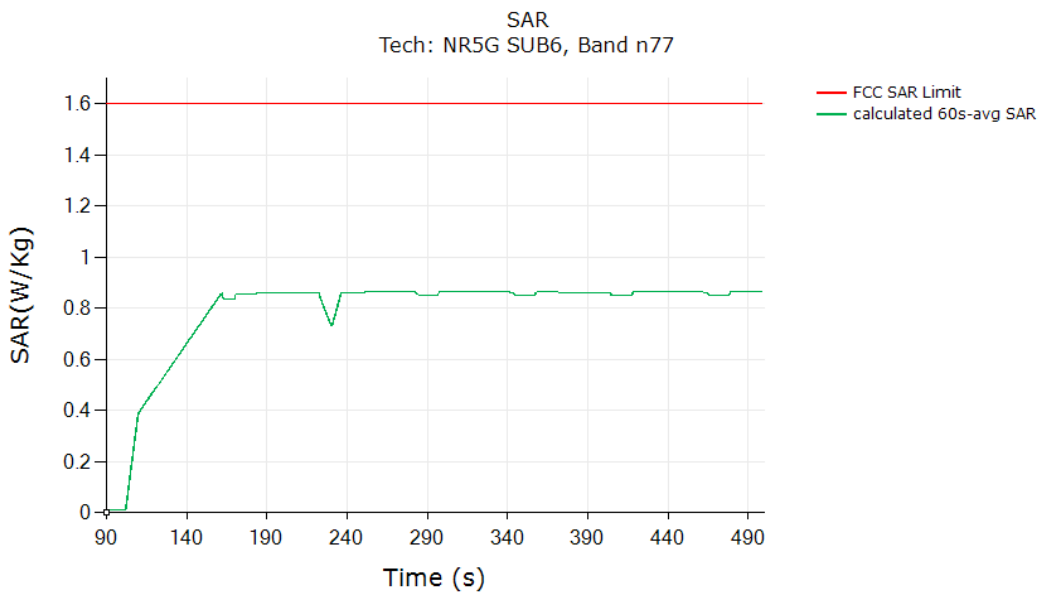

Test result for test sequence 2:

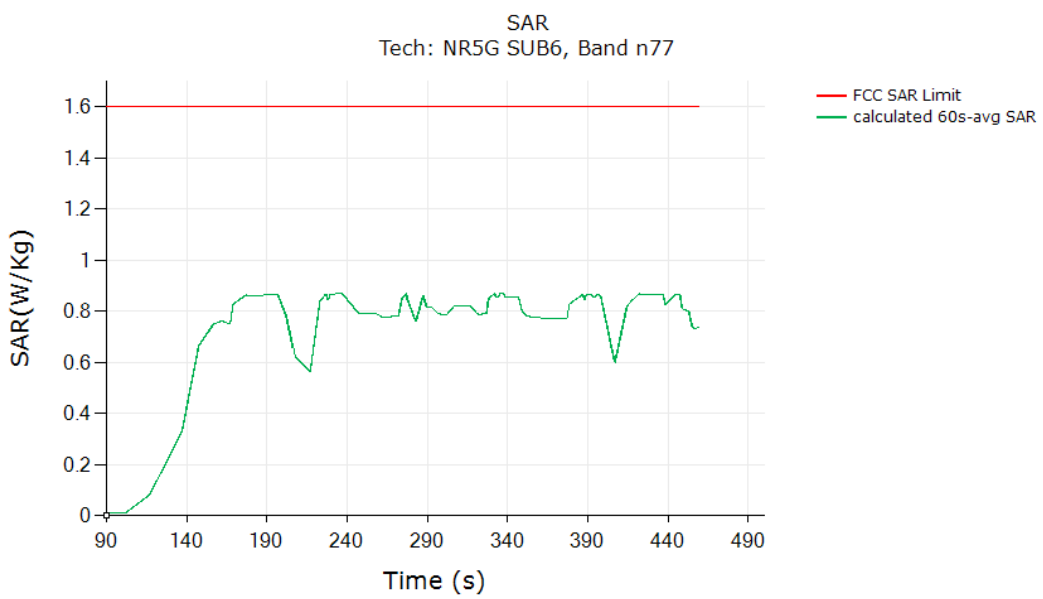

	Test Seq 1	Test Seq 2	(W/kg)
Max 60s-time averaged 1gSAR (green curve)	0.864	0.869	
Validated.			

This report shall not be reproduced except in full, without the written approval of UL Korea, Ltd.

5.3.5. 5GHz SISO (802.11ac)

Test parameters

Parameters	Values
Tech/band/antenna/DSI	5GHz/Ant.E/DSI 0
meas. P_{max}	16.28 dBm
meas. P_{limit}	14.65 dBm
Meas. 1gSAR at P_{limit}	0.995 W/kg
Time window	30 s
Test setup schematic	Figure C-1(a)

Test result for test sequence #1:

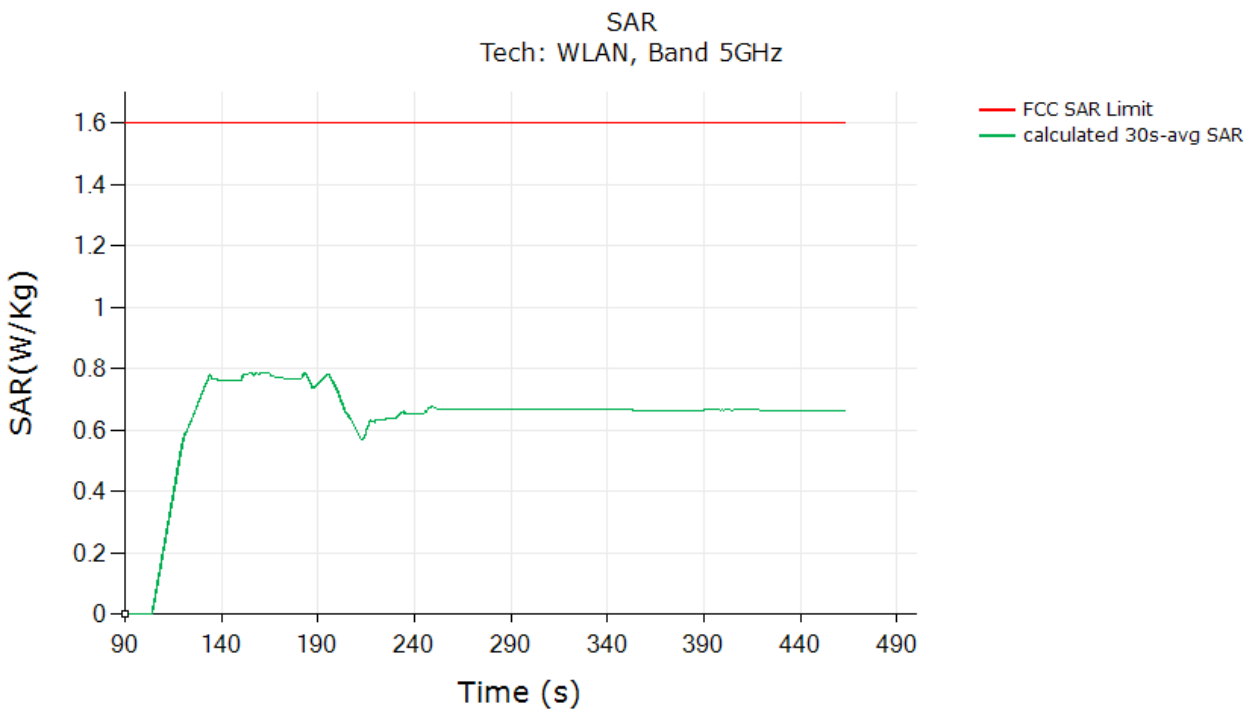

	Test Seq #1	(W/kg)
Max 30s-time averaged 1gSAR (green curve)	0.785	
Validated.		

This report shall not be reproduced except in full, without the written approval of UL Korea, Ltd.

5.4. Change in Call Test Results (test case 5 in Table 5-1)

The detailed test procedures is described in Section 3.3.2.

Test parameters

Parameters	Values
Tech/band/antenna/DSI	NR Bn77/Ant.E/DSI 0
meas. P_{max}	20.89 dBm
meas. P_{limit}	14.69 dBm
Meas. 1gSAR at P_{limit}	0.878 W/kg
Time window	60 s
Call drop time instant	120 s
Test setup schematic	Figure B-1(a)

Call drop test result:

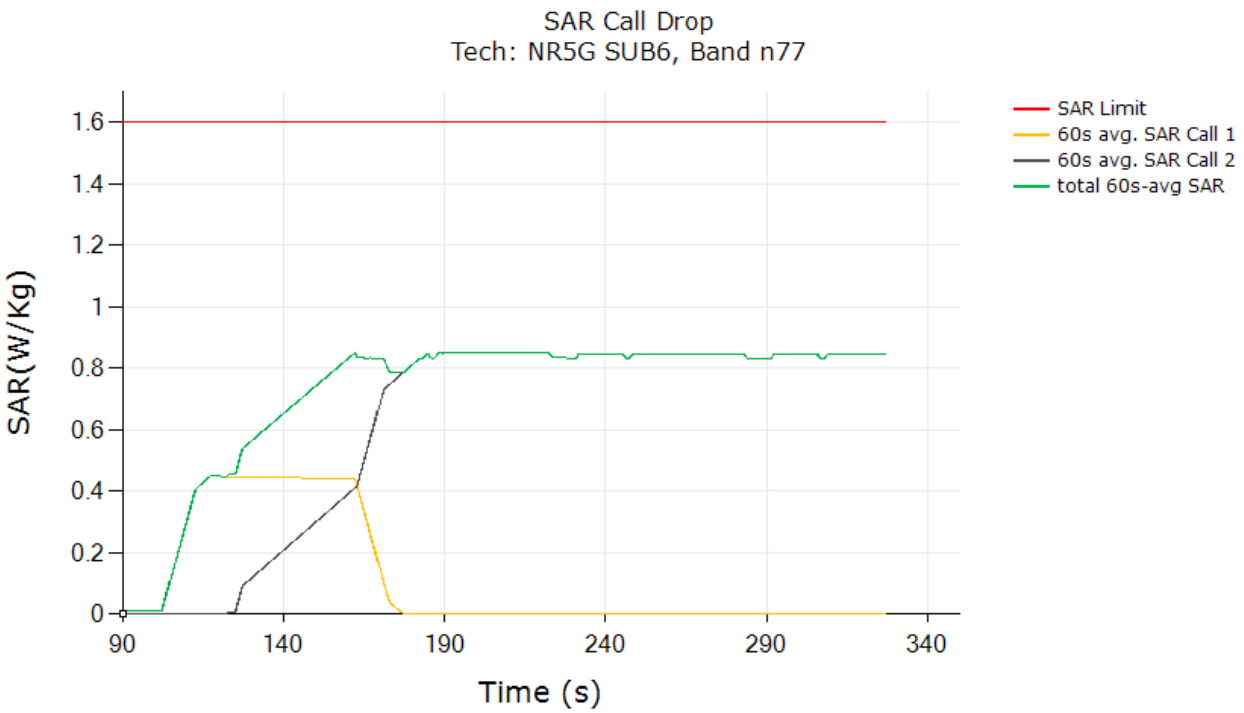

	(W/kg)
Max 60s-time averaged 1gSAR (green curve)	0.850
Validated.	

The test result validated the continuity of power limiting in call change scenario.

This report shall not be reproduced except in full, without the written approval of UL Korea, Ltd.

5.5. Change in DSI (test case 6 in Table 5-1)

The detailed test procedures is described in Section 3.3.5.

Test parameters

Tech/band/antenna/DSI	Parameters	Values
LTE B48/Ant.E/DSI 1	meas. P_{max}	21.23 dBm
	meas. P_{limit}	18.54 dBm
	Meas. 1gSAR at P_{limit}	0.612 W/kg
	Time window	60 s
	switch time instant	138 s
LTE B48/Ant.E/DSI 0	meas. P_{max}	21.23 dBm
	meas. P_{limit}	15.52 dBm
	Meas. 1gSAR at P_{limit}	0.867 W/kg
	Time window	60 s
Test setup schematic		Figure B-1(a)

Test result for change in DSI:

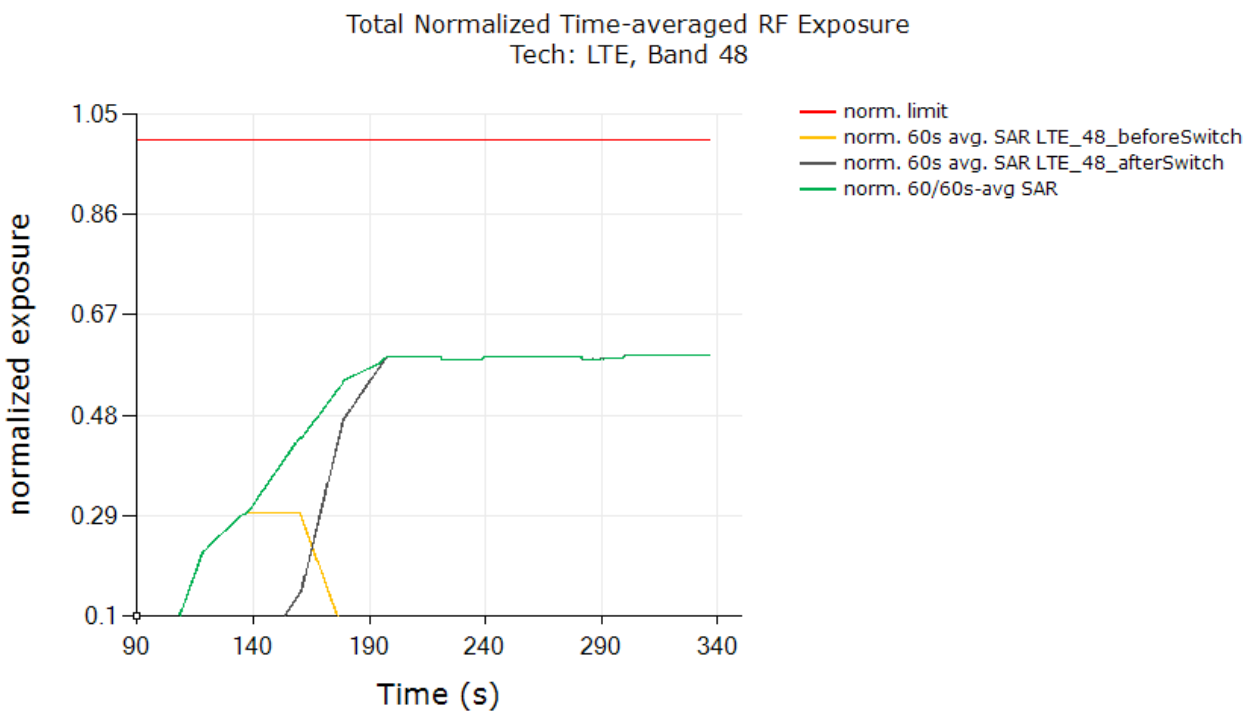

	(W/kg)
Max time averaged normalized SAR (green curve)	0.593
Validated.	

The test result validated the continuity of power limiting in DSI change scenario.

This report shall not be reproduced except in full, without the written approval of UL Korea, Ltd.

5.6. Change in technology/band test results (test case 7 in Table 5-1)

The detailed test procedures is described in Section 3.3.3.

Test parameters

Tech/band/antenna/DSI	Parameters	Values
LTE B71/Ant.A/DSI 0	meas. P_{max}	23.88 dBm
	meas. P_{limit}	21.88 dBm
	Meas. 1gSAR at P_{limit}	0.982 W/kg
	Time window	100 s
	switch time instant	160 s
WCDMA 5/Ant.A/DSI 0	meas. P_{max}	24.47 dBm
	meas. P_{limit}	20.57 dBm
	Meas. 1gSAR at P_{limit}	0.939 W/kg
	Time window	100 s
Test setup schematic		Figure B-1(a)

Test result for change in technology/band:

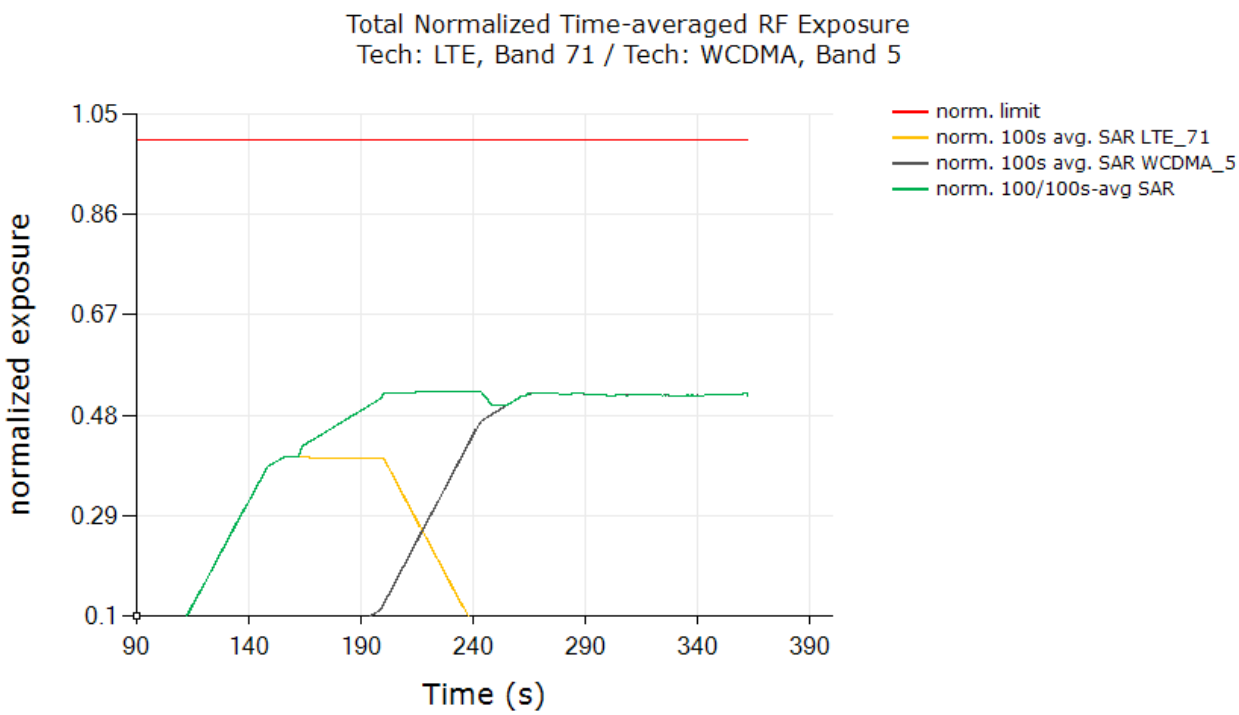

Normalized SAR limit	1.0
Max time averaged normalized SAR (green curve)	0.526
Validated.	

The test result validated the continuity of power limiting in technology/band switch scenario.

This report shall not be reproduced except in full, without the written approval of UL Korea, Ltd.

5.7. Change in Window/Antenna test results (test case 8 in Table 5-1)

The detailed test procedures is described in Section 3.3.4 and Section 3.3.6.

Test parameters

Tech/band/antenna/DSI	Parameters	Values	Tech/band/antenna/DSI	Parameters	Values
LTE B12/Ant.D/DSI 0	meas. P_{max}	24.15 dBm	LTE B48/Ant.E/DSI 0	meas. P_{max}	21.23 dBm
	meas. P_{limit}	24.14 dBm		meas. P_{limit}	15.52 dBm
	meas. 1g SAR at P_{limit}	0.416 W/kg		meas. 1g SAR at P_{limit}	0.867 W/kg
	Time window	100 s		Time window	60 s
Test setup schematic		Figure B-1(b)			

Test case.1 result for change in time-window [Band1(100s) to Band2(60s), then back to Band1(100s)]:

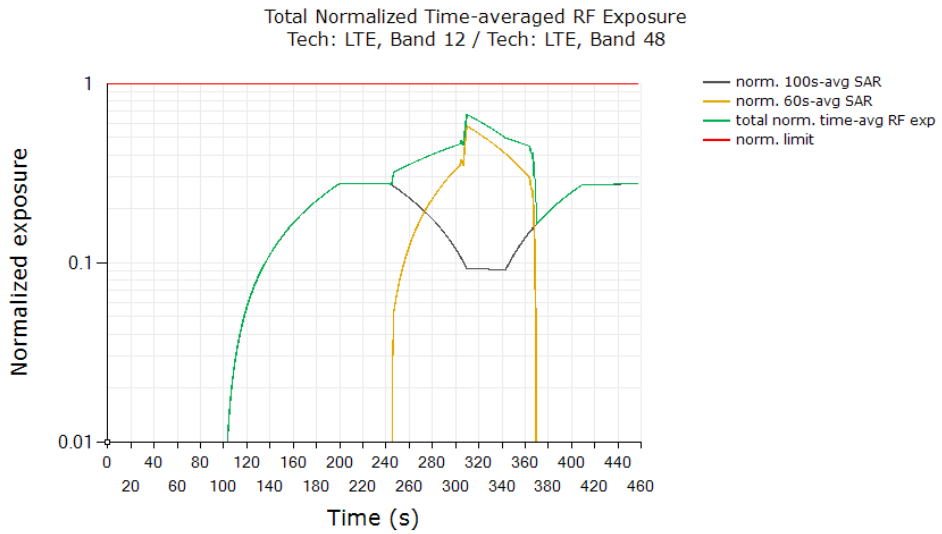

Test case.2 result for change in time-window [Band2(60s) to Band1(100s), then back to Band2(60s)]:

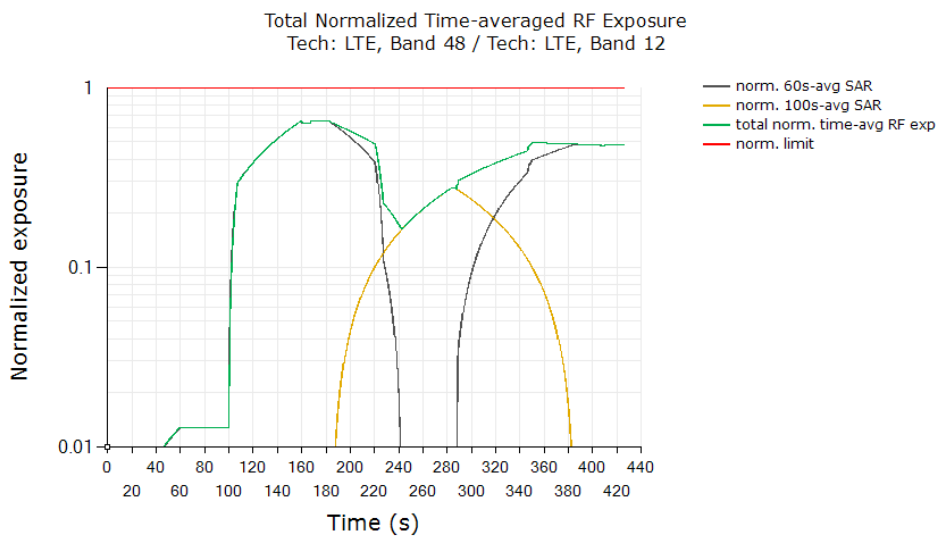

	Test case.1	Test case.2
Normalized SAR limit	1.0	1.0
Max time averaged normalized SAR (green curve)	0.673	0.655
Validated.		

The test result validated the continuity of power limiting in time-window/antenna switch scenario.

This report shall not be reproduced except in full, without the written approval of UL Korea, Ltd.

5.8. Switch in SAR exposure test result

The detailed test procedures is described in Section 3.3.7.

5.8.1. WWAN (EN-DC : LTE+NR) (test case 9 in Table 5-1)

Test parameters

Tech/band/antenna/DSI	Parameters	Values
LTE B12/Ant.A/DSI 1	meas. P_{max}	23.81 dBm
	meas. P_{limit}	23.80 dBm
	meas. 1g SAR at P_{limit}	0.986 W/kg
	Time window	100 s
NR Bn25/Ant.B/DSI 1	meas. P_{max}	24.21 dBm
	meas. P_{limit}	17.82 dBm
	meas. 1g SAR at P_{limit}	0.459 W/kg
	Time window	100 s
Test setup schematic		Figure B-1(c)

Test result for switch in SAR exposure (EN-DC):

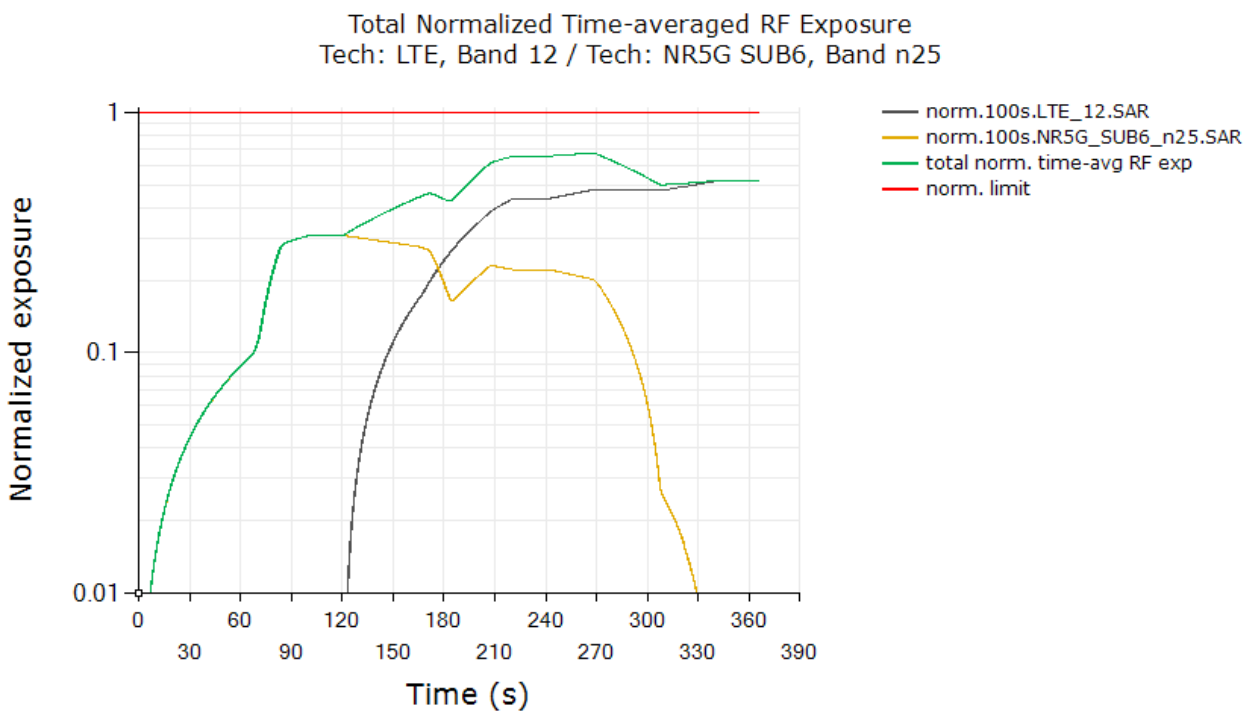

Normalized SAR limit	1.0
Max time averaged normalized SAR (green curve)	0.677
Validated.	

In this test, the total time-averaged normalized RF exposure (green curve) did not exceed normalized limit of 1.0 at all times, the above test result validated the continuity of power limiting in SAR exposure switch scenario.

This report shall not be reproduced except in full, without the written approval of UL Korea, Ltd.

5.8.2. WLAN (DBS : 2.4GHz Radio+5GHz Radio) (test case 11 in Table 5-1)

Test parameters

Tech/band/antenna/DSI	Parameters	Values
2.4GHz/Ant.G/DSI 0	meas. P_{max}	16.73 dBm
	meas. P_{limit}	15.62 dBm
	meas. 1g SAR at P_{limit}	0.476 W/kg
	Time window	30 s
5GHz/Ant.E/DSI 0	meas. P_{max}	16.47 dBm
	meas. P_{limit}	14.54 dBm
	meas. 1g SAR at P_{limit}	0.688 W/kg
	Time window	30 s
Test setup schematic		Figure C-1(b)

Test result for switch in SAR exposure (DBS):

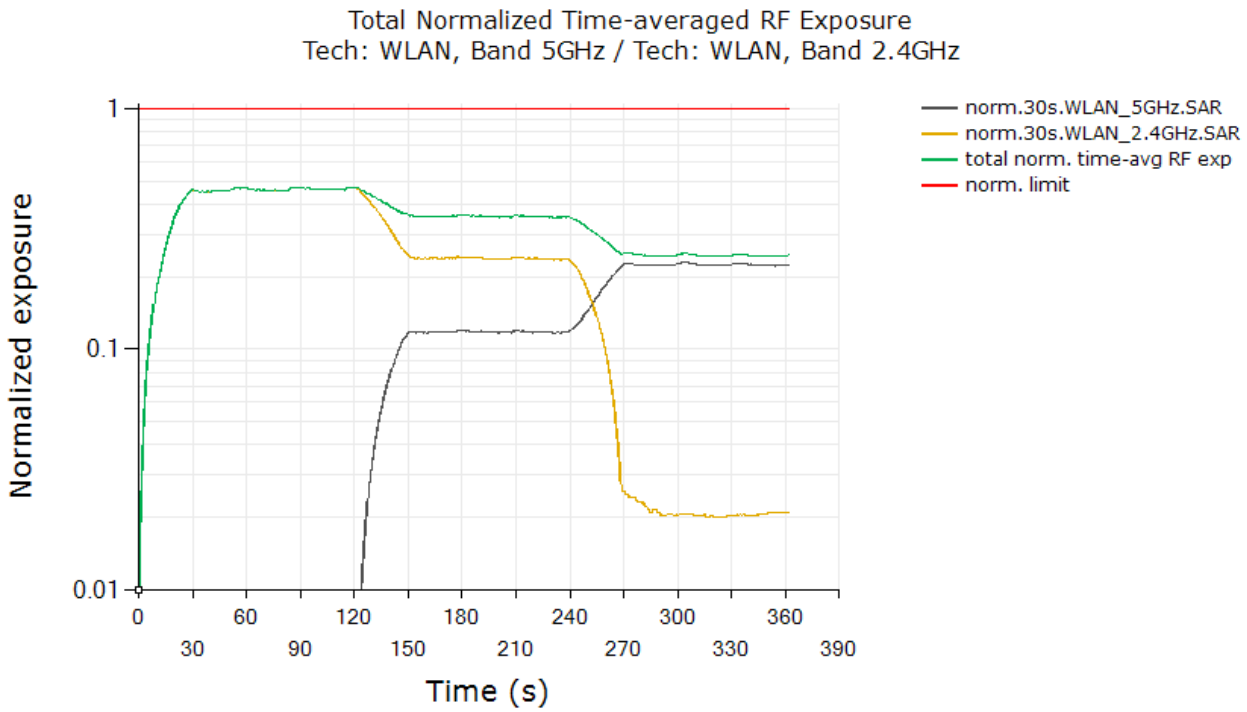

Normalized SAR limit	1.0
Max time averaged normalized SAR (green curve)	0.471
Validated.	

In this test, the total time-averaged normalized RF exposure (green curve) did not exceed normalized limit of 1.0 at all times, the above test result validated the continuity of power limiting in SAR exposure switch scenario.

This report shall not be reproduced except in full, without the written approval of UL Korea, Ltd.

5.9. System Level Compliance Continuity test results

5.9.1. WWAN/WLAN/BT System Level Compliance Continuity (test case 12 in Table 5-1)

The detailed test procedures is described in Section 3.3.8.

Test parameters

Tech/Band/Ant/DSI	Parameters	Values
LTE Band 25 Ant.E (DSI=0)	meas. P_{max}	23.81 dBm
	meas. P_{limit}	16.63 dBm
	meas. 1gSAR at P_{limit}	0.910 W/kg
	Time window applied for averaging	100s
5GHz SISO Ant.E (802.11ac) (DSI=0)	meas. P_{max}	16.47 dBm
	meas. P_{limit}	14.54 dBm
	meas. 1gSAR at P_{limit}	0.688 W/kg
	Time window applied for averaging	30s
BT Ant.G (DSI=0)	meas. P_{limit}	14.55 dBm
	meas. 1gSAR at P_{limit}	0.157 W/kg
	Time window applied for averaging	100s
Test setup schematic		Figure C-1(c)

Test result for System level compliance continuity:

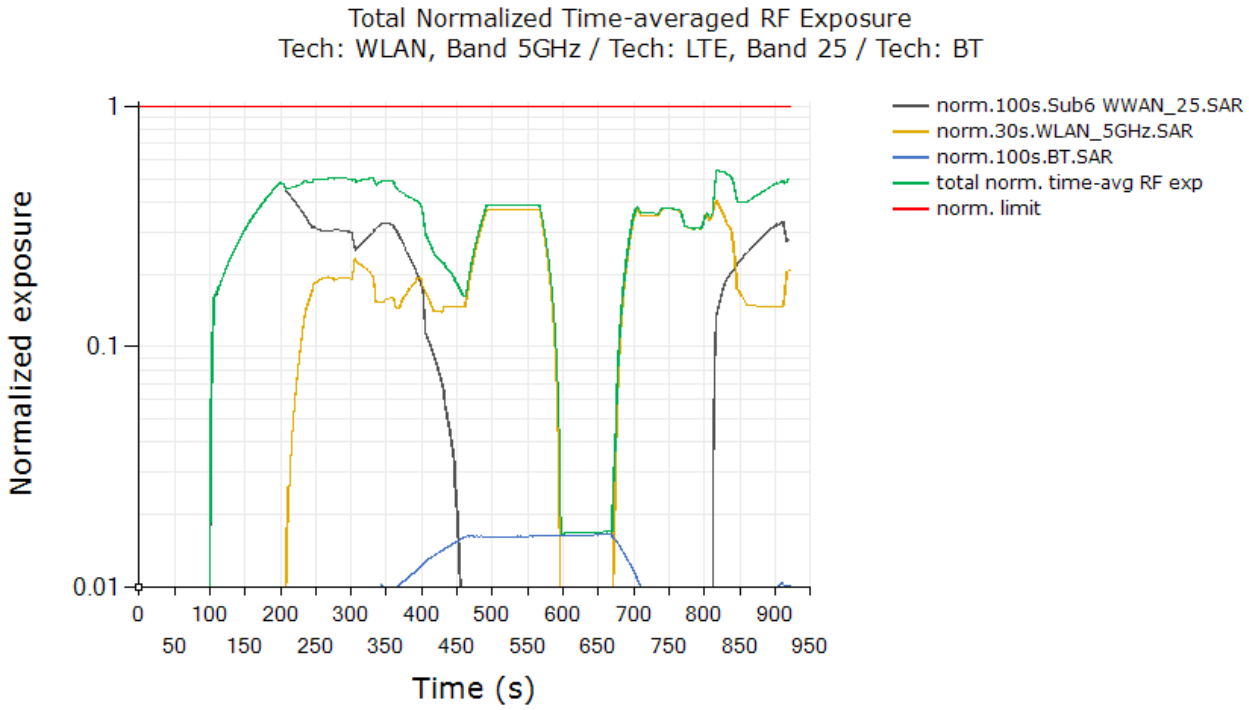

Normalized SAR limit	1.0
Max total time averaged normalized SAR (green curve)	0.543
Validated.	

In this test, the total time-averaged normalized RF exposure (green curve) did not exceed normalized limit of 1.0 at all times, the above test result validated the total RF exposure compliance in system level compliance continuity test scenario.

This report shall not be reproduced except in full, without the written approval of UL Korea, Ltd.

5.10. Exposure Category Switch test results (test case 13 in Table 5-1)

The detailed test procedures is described in Section 3.3.9.

Test parameters

Tech/band/antenna/DSI	Parameters	Values	Tech/band/antenna/DSI	Parameters	Values
NR Bn30/Ant.E/DSI 3	meas. P_{max}	23.42 dBm	NR Bn30/Ant.E/DSI 1	meas. P_{max}	23.42 dBm
	meas. P_{limit}	18.89 dBm		meas. P_{limit}	18.29 dBm
	meas. 1g SAR at P_{limit}	0.128 W/kg		meas. 1g SAR at P_{limit}	0.38 W/kg
	Time window	100 s		Time window	100 s
Test setup schematic		Figure B-1(a)			

Test case.1 result for Exposure Category Switch (head to non-head, then back to head):

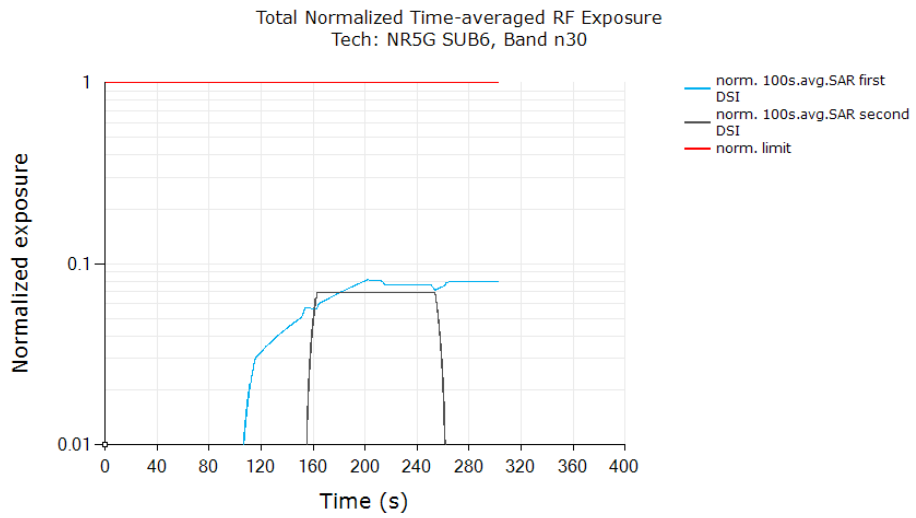

Test case.2 result for Exposure Category Switch (non-head to head, then back to non-head):

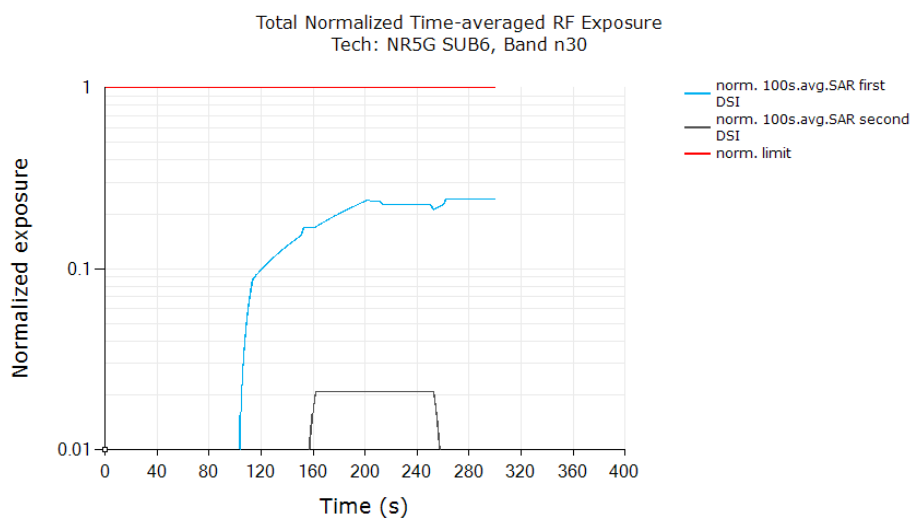

	Test case.1	Test case.2
Normalized SAR limit	1.0	1.0
Max total time averaged normalized SAR (blue curve)	0.129	0.375
Validated.		

In this test, the time-averaged normalized RF exposure in each exposure DSIs did not exceed normalized limit of 1.0 at all times.

This report shall not be reproduced except in full, without the written approval of UL Korea, Ltd.

6. Test Equipment

The measuring equipment used to perform the tests documented in this report has been calibrated in accordance with the manufacturers' recommendations, and is traceable to recognized national standards.

Conducted test

Name of Equipment	Manufacturer	Type/Model	Serial No.	Cal. Due Date
Base Station Simulator	R & S	CMW500	169803	2026-01-02
Base Station Simulator	R & S	CMW500	169801	2026-01-02
UXM 5G Wireless Test Platform	KEYSIGHT	E7515B	MY58120110	2026-01-02
Band Pass Filter	MINI-CIRCUITS	VBFZ-2000-S+	S0239	2026-01-03
Band Pass Filter	MINI-CIRCUITS	VBFZ-5500-S+	S0253	2026-07-22
Power Sensor	R & S	NRP8S	104520	2026-07-22
Power Sensor	R & S	NRP8S	104521	2026-07-22
Power Sensor	R & S	NRP8S	113937	2026-07-22
Directional Coupler	MINI-CIRCUITS	ZUDC20-183+	N/A	2026-07-22
Directional Coupler	MINI-CIRCUITS	ZUDC20-183+	N/A	2026-07-22
Directional Coupler	MINI-CIRCUITS	ZMDC10-83-S+	2316	2026-01-02
Step Attenuator	KEYSIGHT	8494B	MY42155321	2026-07-22
Step Attenuator	KEYSIGHT	8496B	MY42149783	2026-07-22
Resistive Power Splitter	WEINSCHEL	1534	S0246	2026-07-23
Semi-anechoic chamber	TESCOM	TC-5299BU	5922BU000161	N/A

7. Conclusions

Qualcomm Smart Transmit feature employed in Samsung device (FCC ID: A3LSMF968U) has been validated through the conducted/radiated power measurement.

As demonstrated in this report, the power limiting enforcement is effective and the total normalized time-averaged RF exposure does not exceed 1.0 for all the transmission scenarios described in Section 2. Therefore, the EUT complies with FCC RF exposure requirement.

This report shall not be reproduced except in full, without the written approval of UL Korea, Ltd.

Section A. Test Sequences

Sub.6 radio.

1. Test sequence is generated based on below parameters of the EUT:
   a. Measured maximum power (P_{max})
   b. Measured Tx_power_at_SAR_design_target (P_{limit})
   c. Reserve_power_margin (dB)
      - $P_{reserve}$ (dBm) = measured P_{limit} (dBm) – *Reserve_power_margin* (dB)
   d. SAR_time_window (100s for FCC)

2. **Sub.6 radio_Test Sequence 1** Waveform:

   Based on the parameter above, the Test Sequence 1 is generated with one transmission between high and low Tx powers. Here, high power = P_{max}; low power = $P_{max}/2$, and the transition occurs after 80 seconds at high power P_{max}. As long as the power enforcement is taking into effective during one 100s/60s time window, the validation test with this defined test sequence 1 is valid, otherwise, select other radio configuration (band/DSI within the same technology group) having lower P_{limit} for this test. The test sequence 1 waveform is shown below:

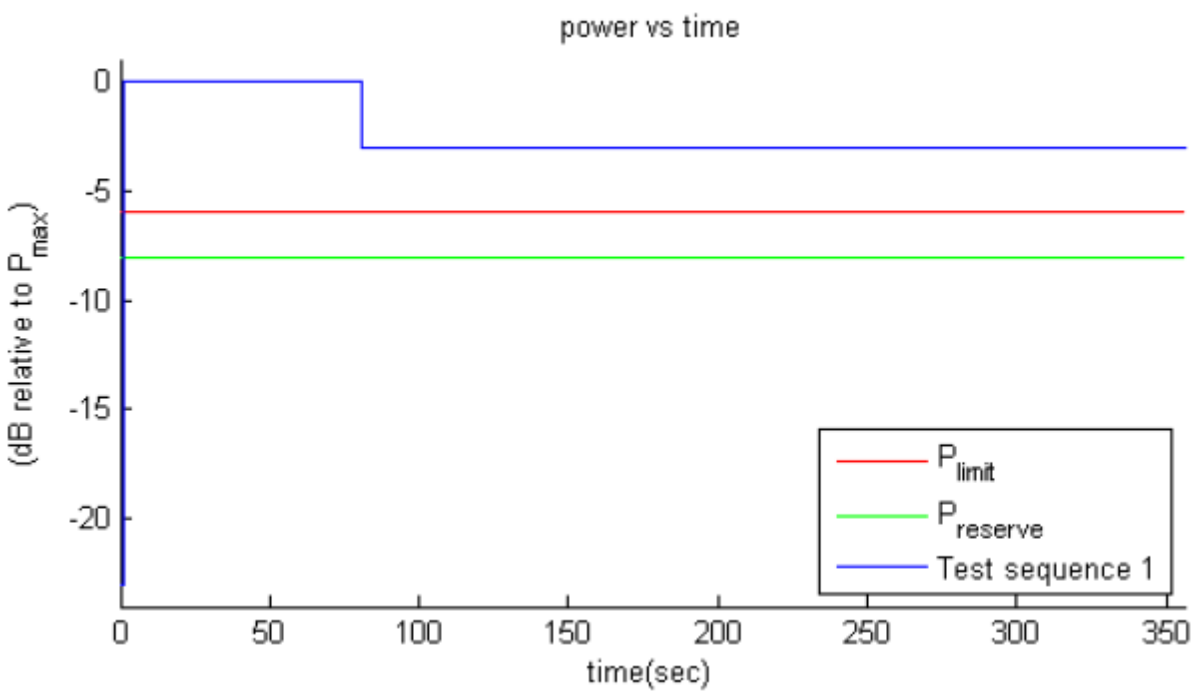

Figure A-1: Test sequence 1 waveform

This report shall not be reproduced except in full, without the written approval of UL Korea, Ltd.

3. **Sub.6 radio_Test Sequence 2** Waveform:

Based on the parameters in Figure A-1, the Test Sequence 2 is generated as described in Table A-1, which contains two 170 second-long sequences (yellow and green highlighted rows) that are mirrored around the center row of 20s, resulting in a total duration of 360 seconds:

Table A-1: Test sequence 2

Time duration (seconds)	dB relative to P_{limit} or $P_{reserve}$
15	$P_{reserve} - 2$
20	P_{limit}
20	$(P_{limit} + P_{max})/2$ averaged in mW and rounded to nearest 0.1 dB step
10	$P_{reserve} - 6$
20	P_{max}
15	P_{limit}
15	$P_{reserve} - 5$
20	P_{max}
10	$P_{reserve} - 3$
15	P_{limit}
10	$P_{reserve} - 4$
20	$(P_{limit} + P_{max})/2$ averaged in mW and rounded to nearest 0.1 dB step
10	$P_{reserve} - 4$
15	P_{limit}
10	$P_{reserve} - 3$
20	P_{max}
15	$P_{reserve} - 5$
15	P_{limit}
20	P_{max}
10	$P_{reserve} - 6$
20	$(P_{limit} + P_{max})/2$ averaged in mW and rounded to nearest 0.1 dB step
20	P_{limit}
15	$P_{reserve} - 2$

The test Sequence 2 waveform is shown in Figure A-2.

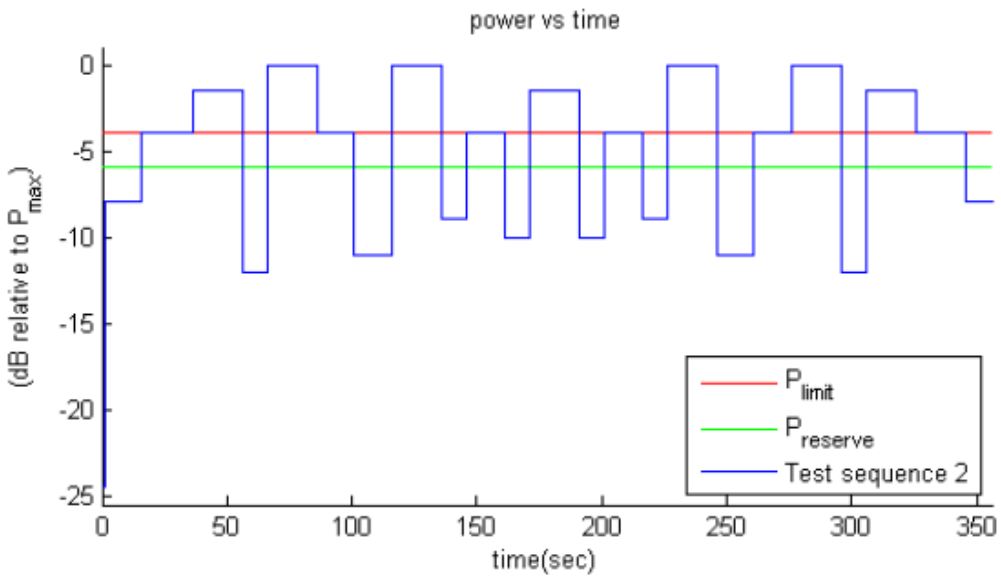

Figure A-2: Test sequence 2 waveform

WLAN radio_Test Sequence 1

Time duration (seconds)	Duty cycle (%)
80	**100%**
120	**50%**

This report shall not be reproduced except in full, without the written approval of UL Korea, Ltd.

Section B. Test Procedures for LTE + Sub6 NR

Section B provides the test procedures for validating Qualcomm Smart Transmit feature for LTE + Sub6 NR non-standalone (NSA) mode transmission scenario, where sub-6GHz LTE link acts as an anchor, and Sub6 NR standalone mode (SA) transmission scenario.

B.1 Time-varying Tx power test for sub6 NR in NSA mode and SA mode

Follows Section 3.2.1 to select test configurations for time-varying test. This test in performed with two pre-defined test sequences (described in Section 3.1) applied to Sub6 NR (with LTE on all-down bits or low power for the entire test after establishing the LTE + Sub6 NR call with the callbox). Follow the test procedures described in Section 3.3.1 to demonstrate the effectiveness of power limiting enforcement and that the time averaged Tx power of Sub6 NR when converted into 1g or 10gSAR values does not exceed the regulatory limit at all times (See Eq. (1a) and (1b)). Sub6 NR response to test sequence 1 and test sequence 2 will be similar to other technologies (say, LTE), and are shown in Sections 6.3.7 and 6.3.8.

B.2 Switch in SAR exposure between LTE vs. Sub6 NR during transmission

This test is to demonstrate that Smart Transmit feature accurately accounts for switching in exposures among SAR for LTE radio only, SAR from both LTE radio and sub6 NR, and SAR from sub6 NR only scenarios, and ensures total time-averaged RF exposure compliance with FCC limit.

Test procedure:

1. Measure conducted Tx power corresponding to P_{limit} for LTE and sub6 NR in selected band. Test condition to measure conducted P_{limit} is:
    - Establish device in call with the callbox for LTE in desired band. Measure conducted Tx power corresponding to LTE P_{limit} with Smart Transmit <u>enable</u> and *Reserve_power_margin* set to 0 dB, callbox set to request maximum power.
    - Repeat above step to measure conducted Tx power corresponding to Sub6 NR P_{limit}. If testing LTE + Sub6 NR in non-standalone mode, then establish LTE + Sub6 NR call with callbox and request all down bits for radio1 LTE. In this scenario, with callbox requesting maximum power from Sub6 NR, measured conducted Tx power corresponds to radio2 P_{limit} (as radio1 LTE is at all-down bits).

2. Set *Reserve_power_margin* to actual (intended) value with EUT setup for LTE _Sub6 NR call. First, establish LTE connection in all-up bits with the callbox, and then Sub6 NR connection is added with callbox requesting UE to transmit at maximum power in Sub6 NR. As soon as the Sub6 NR connection is established, request all-down bits on LTE link (otherwise, Sub6 NR will not have sufficient RF exposure margin to sustain the call with LTE in all-up bits). Continue LTE(all-down bits) + Sub6 NR transmission for more than one time-window duration to test predominantly Sub6 NR SAR exposure scenario (as SAR exposure is negligible from all-down bits in LTE). After at least one time-window, request LTE to go all-up bits to test LTE SAR and Sub6 NR SAR exposure scenario. After as least one more time-window, drop (or request all-down bits) Sub6 NR transmission to test predominantly LTE SAR exposure scenario. Continue the test for at least one more time-window. Record the conducted Tx powers for both LTE and Sub6 NR for the entire duration of this test.

This report shall not be reproduced except in full, without the written approval of UL Korea, Ltd.

3. Once the measurement is done, extract instantaneous Tx power versus time for both LTE and Sub6 NR links. Similar to technology/band switch test in Section 3.3.3, convert the conducted Tx power for both these radios into 1g or 10gSAR value (see Eq. (6a) and (6b)) using corresponding technology/band P_{limit} measured in Step 1, and then perform 100s running average to determine time-averaged 1g or 10gSAR versus time as illustrated in Figure A-1. Note that here it is assumed both radios have Tx frequencies < 3GHz, otherwise, 60s running average should be performed for radios having Tx frequency between 3GHz and 6GHz.

4. Make one plot containing: (a) instantaneous 1g or 10gSAR versus time determined in Step 3, (b) computed time-averaged 1g or 10gSAR versus time determined in Step 3, and (c) corresponding regulatory $1g\ or\ 10gSAR_{limit}$ of 1.6 W/kg or 4.0 W/kg, and (d) corresponding normalized regulatory $1g\ or\ 10gSAR_{limit}$ of 1.0.

The validation criteria is, at all times, the time-averaged 1g or 10gSAR versus time shall not exceed the regulatory $1g\ or\ 10gSAR_{limit}$ limit.

Appendixes

Refer to separated files for the following appendixes.

S-4791963822-S1 FCC SAR Part2 App A Photos

End OF REPORT

This report shall not be reproduced except in full, without the written approval of UL Korea, Ltd.