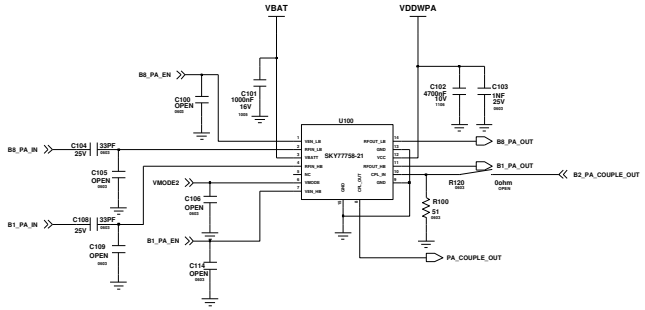

3G PAM

CONTROL	B8_PA_EN	B1_PA_EN	VMODE2
B8_HIGH POWER	1		0
B8_LOW POWER	1		1
B1_HIGH POWER		1	0
B8_LOW POWER		1	1

3G POWER CONTROL LOGIC

CONTROL		GSM_PA_EN	PA_MODE	BS1
STAND BY		0	0	0
GSM850		1	1	1
GSM1800/1900 RX		1	0	1
W900 TRX /G900RX		0	0	1
W2100 TRX		0	1	1
GSM850/900 TX		1	0	0
DCS/PCS TX		1	1	0

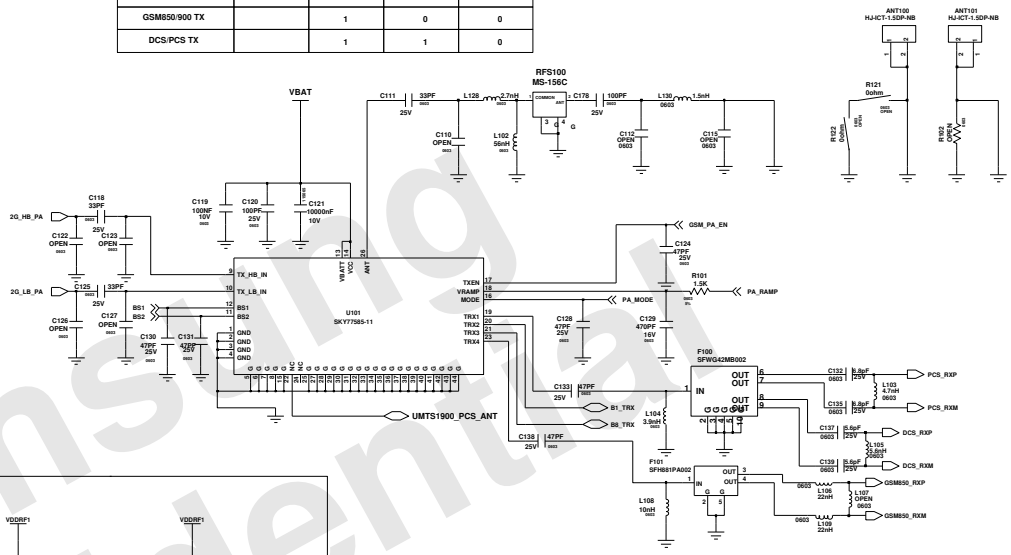

WGPRS Tx Module

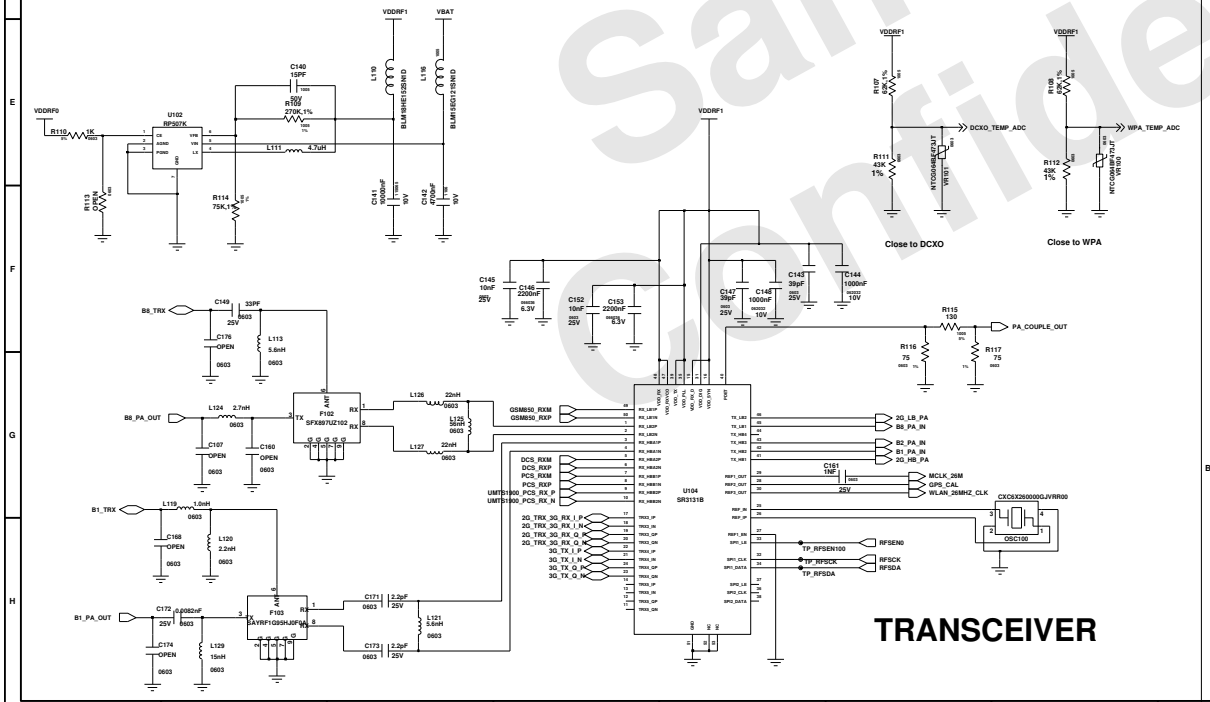

TRANSCEIVER

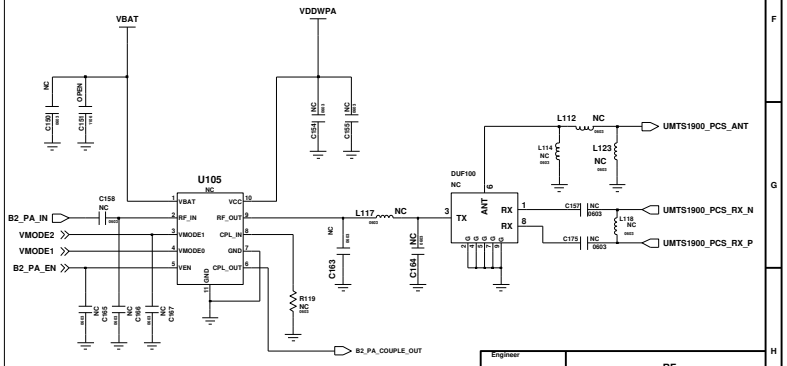

3G PA(LA BAND2)

Engineer	RF		
Drawn by			
R&D CHK	TITLE		Size A2
DOC CTRL CHK	SM-G130HN REV1.1		
MFG ENGR CHK			
Changed by	Date Changed	Time Changed	QA CHK
REV 1.1	Drawing Number	Sheet 1 of 5	

Samsung Confidential

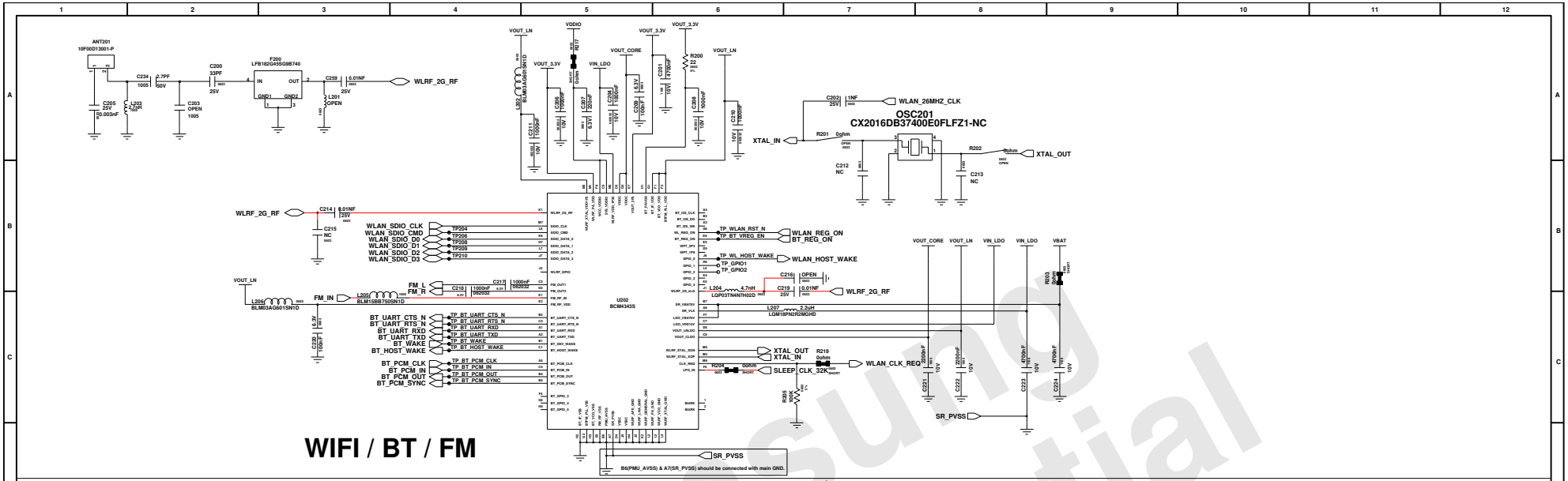

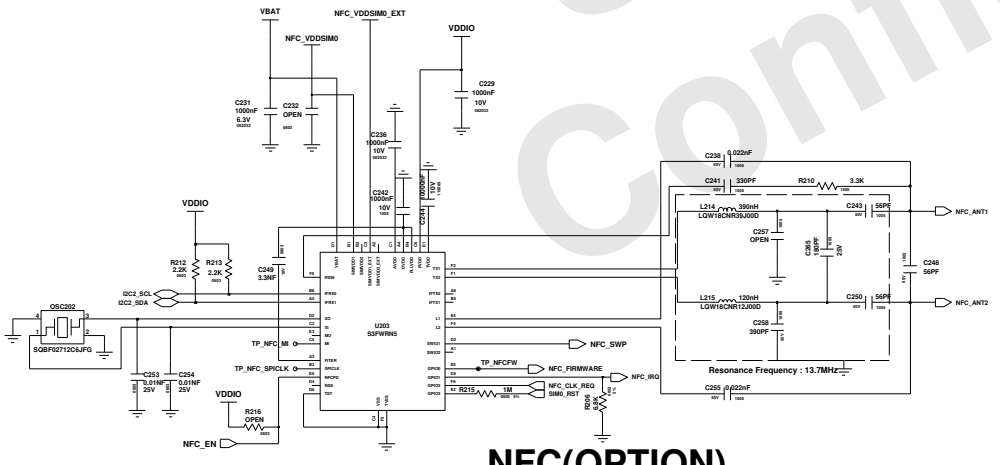

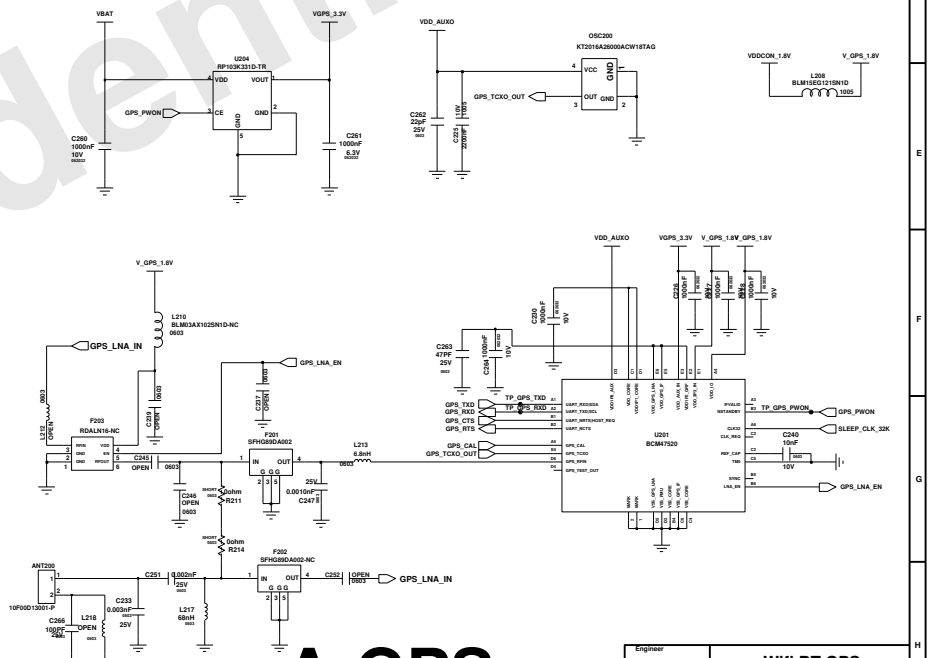

Changed by	Date Changed	Time Changed	QA CHK	REV 1.1	Drawing Number	Sheet 2 of 5	

Engineer
Drawn by YOUNG
R&D CHK
DOC CTRL CHK
MFG ENGR CHK

TITLE: Wifi BT GPS
SM-G130HN REV1.1
Size A2

Samsung Confidential

SAMSUNG CONFIDENTIAL
THIS DOCUMENT CONTAINS CONFIDENTIAL PROPRIETARY INFORMATION THAT IS SAMSUNG ELECTRONICS CO'S PROPERTY. DO NOT DISCLOSE TO OR DUPLICATE FOR OTHERS EXCEPT AS AUTHORIZED BY SAMSUNG.

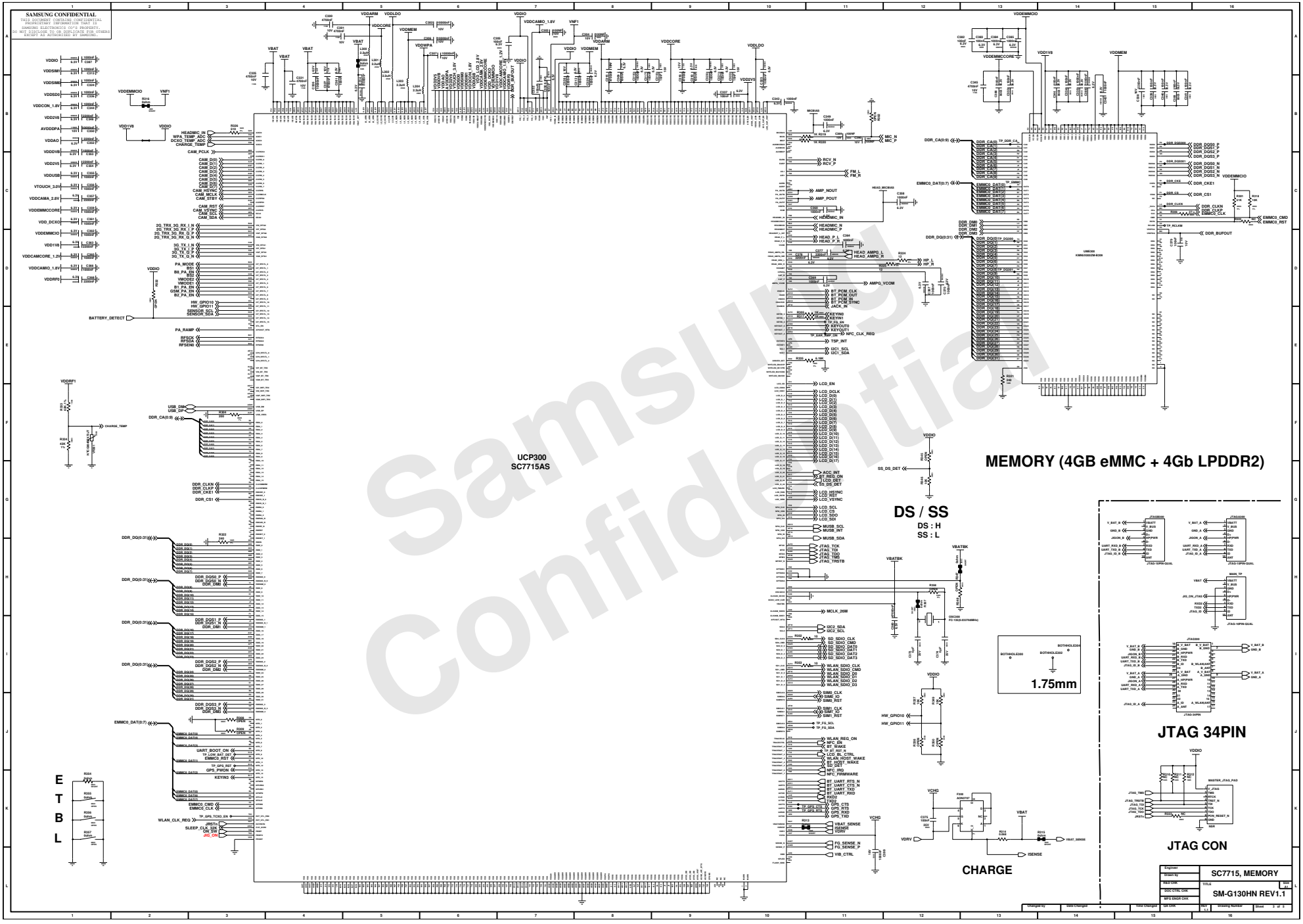

Samsung Confidential

SAMSUNG CONFIDENTIAL
THIS DOCUMENT CONTAINS CONFIDENTIAL PROPRIETARY INFORMATION THAT IS SAMSUNG ELECTRONICS CO'S PROPERTY. DO NOT DISCLOSE TO OR DUPLICATE FOR OTHERS EXCEPT AS AUTHORIZED BY SAMSUNG.

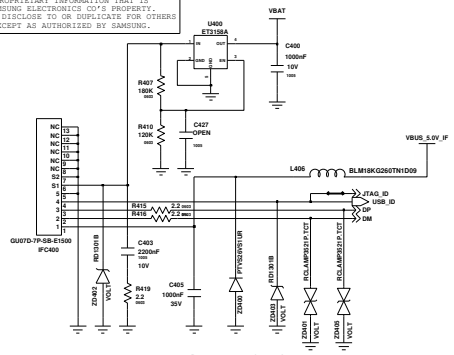

microUSB CON

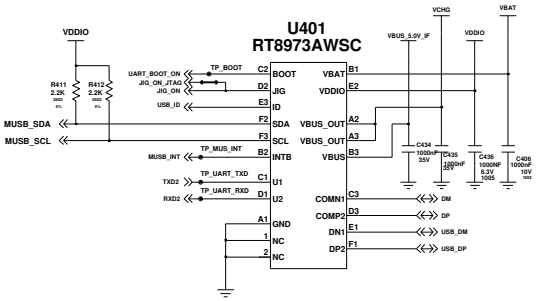

MUIC

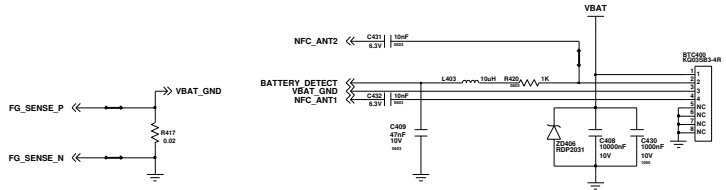

BATT CON

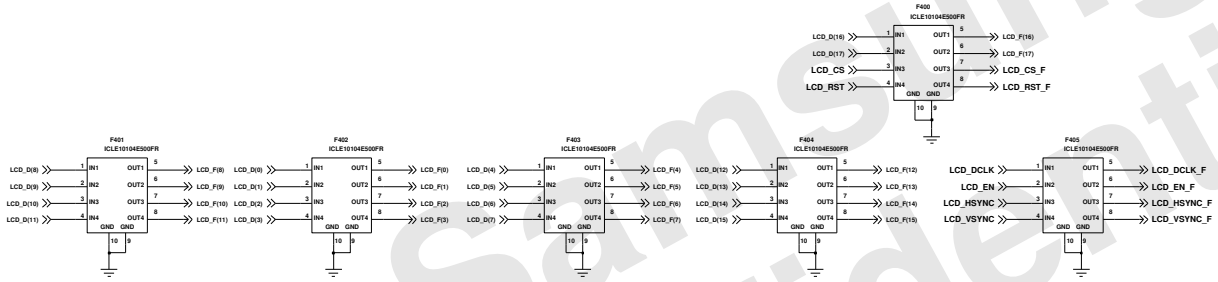

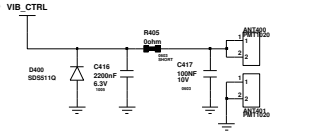

MOTOR_PAD

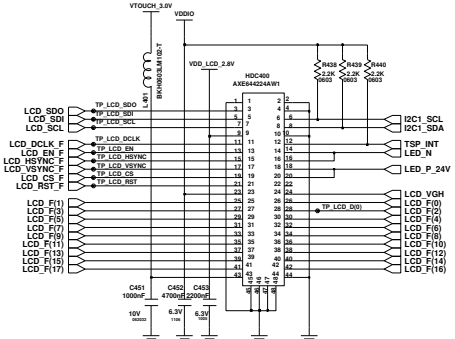

3.5'' HVGA TFT LCD

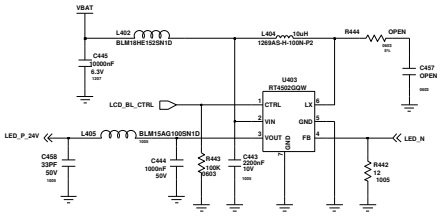

LCD_LED DRIVER IC

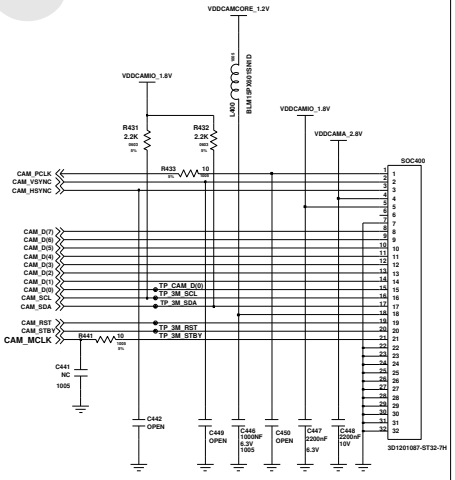

3M CAM SOCKET

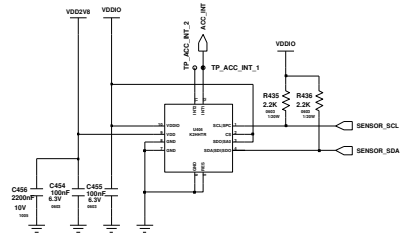

Accelero SENSOR

Engineer	
rt19	
Drawn by	
rt19	
R&D CHK	TITLE
DOC CTRL CHK	SM-G130HN REV1.1
MFG ENGR CHK	

Size A2

Changed by	Date Changed	Time Changed	QA CHK	REV 1.1	Drawing Number	Sheet 4 of 5

Samsung Confidential

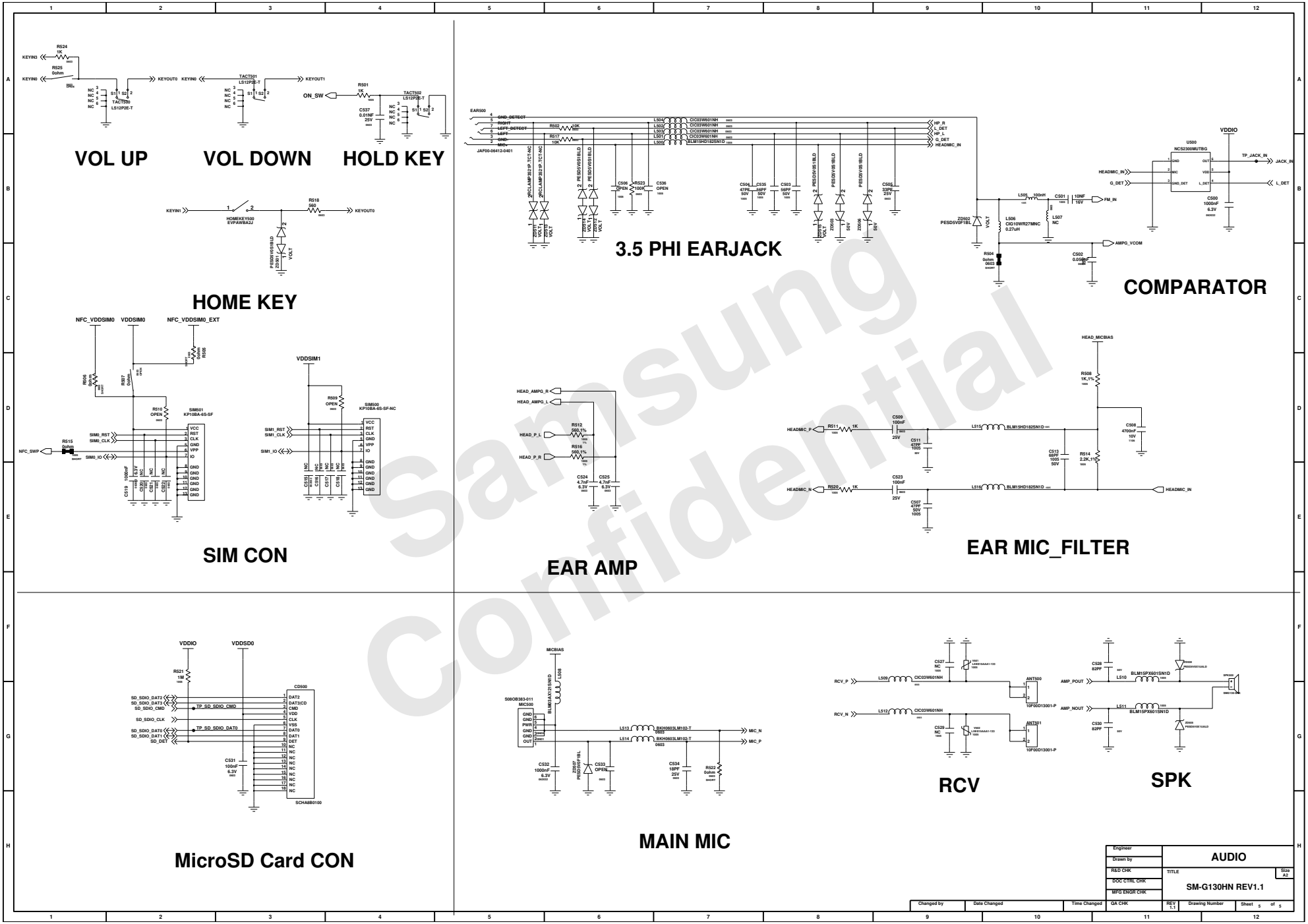

Samsung Confidential

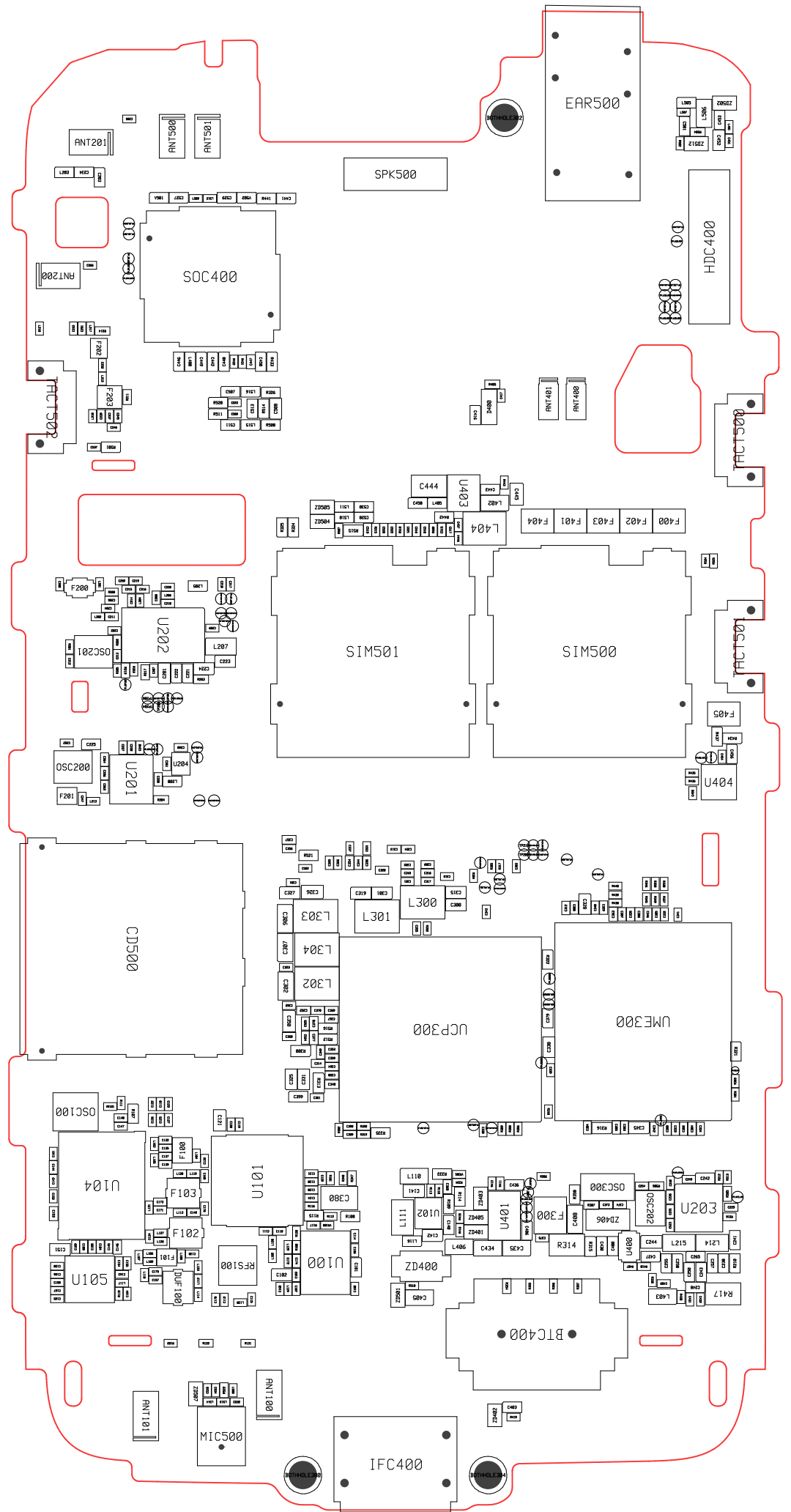
EAR500
SPK500
HDC400
SOC400
ANT201
ANT500
ANT501
ANT200
ANT101
ANT100
ANT400
ANT401
TACT500
TACT501
TACT502
SIM501
SIM500
U202
U201
U404
U403
L404
CD500
UCP300
UME300
L300
L301
L302
L303
L304
U104
U101
U100
U105
U401
U203
U402
OSC200
OSC201
OSC100
OSC202
OSC300
F100
F101
F102
F103
F200
F201
F202
F203
F300
F400
F401
F402
F403
F404
F405
DUF100
RFS100
MIC500
IFC400
BTC400
BATTHOLE302
BATTHOLE303
BATTHOLE304

HOMEKEY500
MW21E6_TLIAT_BAD
KEY1
KEY2
KEY3
KEY4
U2501
U2502
U2503
U2504
U2505
U2506
U2507
U2508
U2509
U2510
U2511
U2512
U2513
U2514