FCC CFR47 PART 22 SUBPART H
FCC CFR47 PART 24 SUBPART E

CERTIFICATION TEST REPORT

FOR

GSM Phone + Bluetooth and WLAN 2.4GHz b/g/n

MODEL NUMBER: SM-G360H/DS

FCC ID: A3LSMG360H

REPORT NUMBER: 14I18763-E1 REVISION A

ISSUE DATE: SEPTEMBER 23, 2014

Prepared for

SAMSUNG ELECTRONICS CO., LTD.
416, MAETAN 3-DONG, YEONGTONG-GU
SUWON-CITY, GYEONGGI-DO 443-742, SOUTH KOREA

Prepared by

UL VERIFICATION SERVICES INC.
47173 BENICIA STREET
FREMONT, CA 94538, U.S.A.
TEL: (510) 771-1000
FAX: (510) 661-0888

NVLAP LAB CODE 200065-0

Revision History

Rev.	Issue Date	Revisions	Revised By
--	9/12/14	Initial issue	P. Zhang
A	9/23/14	Update page 9 & 18	D.Coronia

UL VERIFICATION SERVICES INC. FORM NO: CCSUP4701I
47173 BENICIA STREET, FREMONT, CA 94538, USA TEL: (510) 771-1000 FAX: (510) 661-0888

This report shall not be reproduced except in full, without the written approval of UL Verification Services Inc.

TABLE OF CONTENTS

1. ATTESTATION OF TEST RESULTS 5
2. TEST METHODOLOGY 6
3. FACILITIES AND ACCREDITATION 6
4. CALIBRATION AND UNCERTAINTY 6
4.1. MEASURING INSTRUMENT CALIBRATION 6
4.2. SAMPLE CALCULATION 6
4.3. MEASUREMENT UNCERTAINTY 7
5. EQUIPMENT UNDER TEST 8
5.1. DESCRIPTION OF EUT 8
5.2. MAXIMUM OUTPUT POWER 8
5.3. DESCRIPTION OF AVAILABLE ANTENNAS 9
5.4. DESCRIPTION OF TEST SETUP 10
6. TEST AND MEASUREMENT EQUIPMENT 13
7. Summary Table 14
8. RF POWER OUTPUT VERIFICATION 15
8.1. GSM/GPRS/EDGE 15
10. LIMITS AND CONDUCTED RESULTS 19
10.1. OCCUPIED BANDWIDTH 19
10.1.1. OCCUPIED BANDWIDTH RESULTS 20
10.1.1. OCCUPIED BANDWIDTH PLOTS 21
11. BAND EDGE EMISSIONS 22
11.1.1. BAND EDGE PLOTS 23
11.2. OUT OF BAND EMISSIONS 25
11.2.1. OUT OF BAND EMISSIONS RESULT 26
11.2.2. OUT OF BAND EMISSIONS PLOTS 27
11.3. FREQUENCY STABILITY 29
11.3.1. FREQUENCY STABILITY RESULTS 30
12. RADIATED TEST RESULTS 32
12.1. RADIATED POWER (ERP & EIRP) 32
12.1.1. ERP/EIRP Results 32

UL VERIFICATION SERVICES INC. FORM NO: CCSUP4701I
47173 BENICIA STREET, FREMONT, CA 94538, USA TEL: (510) 771-1000 FAX: (510) 661-0888

This report shall not be reproduced except in full, without the written approval of UL Verification Services Inc.

12.1.2. ERP/EIRP DATA 34
12.2. FIELD STRENGTH OF SPURIOUS RADIATION 36
12.2.1. SPURIOUS RADIATION DATA 37
13. SETUP PHOTOS 39

UL VERIFICATION SERVICES INC. FORM NO: CCSUP4701I
47173 BENICIA STREET, FREMONT, CA 94538, USA TEL: (510) 771-1000 FAX: (510) 661-0888

This report shall not be reproduced except in full, without the written approval of UL Verification Services Inc.

1. ATTESTATION OF TEST RESULTS

COMPANY NAME:	SAMSUNG ELECTRONICS CO., LTD
EUT DESCRIPTION:	GSM Phone + Bluetooth & WLAN 2.4GHz b/g/n
MODEL:	SM-G360H/DS
SERIAL NUMBER:	R31F801R93W (conducted), R31F808G6SJ (radiated)
DATE TESTED:	September 8 - 12, 2014

APPLICABLE STANDARDS	
STANDARD	**TEST RESULTS**
FCC PART 22H and 24E	PASS

UL Verification Services Inc. tested the above equipment in accordance with the requirements set forth in the above standards. All indications of Pass/Fail in this report are opinions expressed by UL Verification Services Inc. based on interpretations and/or observations of test results. Measurement Uncertainties were not taken into account and are published for informational purposes only. The test results show that the equipment tested is capable of demonstrating compliance with the requirements as documented in this report.

Note: The results documented in this report apply only to the tested sample, under the conditions and modes of operation as described herein. This document may not be altered or revised in any way unless done so by UL Verification Services Inc. and all revisions are duly noted in the revisions section. Any alteration of this document not carried out by UL Verification Services Inc. will constitute fraud and shall nullify the document. This report must not be used by the client to claim product certification, approval, or endorsement by NVLAP, NIST, any agency of the Federal Government, or any agency of any government.

Approved & Released For
UL Verification Services Inc. By:

PENG ZHANG
CONSUMER TECHNOLOGY DIVISION
PROJECT LEAD
UL Verification Services Inc.

Tested By:

STEVEN TRAN
CONSUMER TECHNOLOGY DIVISION
LAB ENGINEER
UL Verification Services Inc.

UL VERIFICATION SERVICES INC. FORM NO: CCSUP4701I
47173 BENICIA STREET, FREMONT, CA 94538, USA TEL: (510) 771-1000 FAX: (510) 661-0888

This report shall not be reproduced except in full, without the written approval of UL Verification Services Inc.

2. TEST METHODOLOGY

The tests documented in this report were performed in accordance with TIA-603-C, FCC CFR 47 Part 22 and FCC CFR Part 24.

3. FACILITIES AND ACCREDITATION

The test sites and measurement facilities used to collect data are located at 47173 and 47266 Benicia Street, Fremont, California, USA. Line conducted emissions are measured only at the 47173 address. The following table identifies which facilities were utilized for radiated emission measurements documented in this report. Specific facilities are also identified in the test results sections.

47173 Benicia Street	47266 Benicia Street
☒ Chamber A	☐ Chamber D
☒ Chamber B	☐ Chamber E
☒ Chamber C	☐ Chamber F

UL Verification Services Inc. is accredited by NVLAP, Laboratory Code 200065-0. The full scope of accreditation can be viewed at http://ts.nist.gov/standards/scopes/2000650.htm.

4. CALIBRATION AND UNCERTAINTY

4.1. MEASURING INSTRUMENT CALIBRATION

The measuring equipment utilized to perform the tests documented in this report has been calibrated in accordance with the manufacturer's recommendations, and is traceable to recognized national standards

4.2. SAMPLE CALCULATION

Where relevant, the following sample calculation is provided:

EIRP = PSA reading with EUT worst orientation (dBm) + Path loss (dB) – cable loss(between the SG and substitution antenna) + Substitution Antenna Factor (dBi)

ERP = PSA reading with EUT worst orientation (dBm) + Path loss (dB) – cable loss(between the SG and substitution antenna)

(Path loss = Signal generator output – PSA reading with substitution antenna)

UL VERIFICATION SERVICES INC. FORM NO: CCSUP4701I
47173 BENICIA STREET, FREMONT, CA 94538, USA TEL: (510) 771-1000 FAX: (510) 661-0888

This report shall not be reproduced except in full, without the written approval of UL Verification Services Inc.

4.3. MEASUREMENT UNCERTAINTY

Where relevant, the following measurement uncertainty levels have been estimated for tests performed on the apparatus:

PARAMETER	UNCERTAINTY
Conducted Disturbance, 0.15 to 30 MHz	3.52 dB
Radiated Disturbance, 30 to 26000 MHz	4.94 dB

Uncertainty figures are valid to a confidence level of 95%.

UL VERIFICATION SERVICES INC. FORM NO: CCSUP4701I
47173 BENICIA STREET, FREMONT, CA 94538, USA TEL: (510) 771-1000 FAX: (510) 661-0888

This report shall not be reproduced except in full, without the written approval of UL Verification Services Inc.

5. EQUIPMENT UNDER TEST

5.1. DESCRIPTION OF EUT

The EUT is a GSM Phone + Bluetooth and WLAN 2.4GHz b/g/n.

5.2. MAXIMUM OUTPUT POWER

The transmitter has a maximum peak conducted and radiated ERP / EIRP output powers as follows:

FCC Part 22/24						
Band	Frequency Range(MHz)	Modulation	Conducted		Radiated	
		Peak	Avg	mW	Avg	mW
GSM850	824~849	GMSK	32.4	1737.80		
	824~849	GPRS	32.4	1737.80	30.7	1174.89
GSM1900	1850~1910	GMSK	29.6	912.01		
	1850~1910	GPRS	29.6	912.01	23.35	216.27

UL VERIFICATION SERVICES INC. FORM NO: CCSUP4701I
47173 BENICIA STREET, FREMONT, CA 94538, USA TEL: (510) 771-1000 FAX: (510) 661-0888

This report shall not be reproduced except in full, without the written approval of UL Verification Services Inc.

5.3. DESCRIPTION OF AVAILABLE ANTENNAS

The radio utilizes a PIFA antenna for the [List the bands supported] with a maximum peak gain as follow:

Frequency (MHz)	Peak Gain (dBi)
GSM850, 824~849MHz	-2.15
GSM1900, 1850~1910MHz	0.24

UL VERIFICATION SERVICES INC. FORM NO: CCSUP4701I
47173 BENICIA STREET, FREMONT, CA 94538, USA TEL: (510) 771-1000 FAX: (510) 661-0888

This report shall not be reproduced except in full, without the written approval of UL Verification Services Inc.

5.4. DESCRIPTION OF TEST SETUP

SUPPORT EQUIPMENT

Support Equipment List				
Description	Manufacturer	Model	Serial Number	FCC ID
AC Adapter	Samsung	ETA0U10IBE	N/A	N/A
Headset	Samsung	N/A	N/A	N/A

I/O CABLES (CONDUCTED SETUP)

I/O Cable List						
Cable No	Port	# of identical ports	Connector Type	Cable Type	Cable Length (m)	Remarks
1	RF Out	1	Spectrum Analyzer	Shielded	None	NA
2	Antenna Port	1	EUT	Shielded	0.1m	NA
3	RF In/Out	1	Communication Test Set	Shielded	1m	NA

I/O CABLES (RADIATED SETUP)

I/O CABLE LIST						
Cable No.	Port	# of Identical Ports	Connector Type	Cable Type	Cable Length	Remarks
1	USB	1	AC Adapter	Un-shielded	1.2m	No
2	Jack	1	Headset	Shielded	1m	No
3	RF In/out	1	Communication Test Set	Un-shielded	2m	Yes

TEST SETUP

The EUT is continuously communicated to the call box during the tests.

UL VERIFICATION SERVICES INC. FORM NO: CCSUP4701I
47173 BENICIA STREET, FREMONT, CA 94538, USA TEL: (510) 771-1000 FAX: (510) 661-0888

This report shall not be reproduced except in full, without the written approval of UL Verification Services Inc.

SETUP DIAGRAM FOR TESTS (CONDUCTED TEST SETUP)

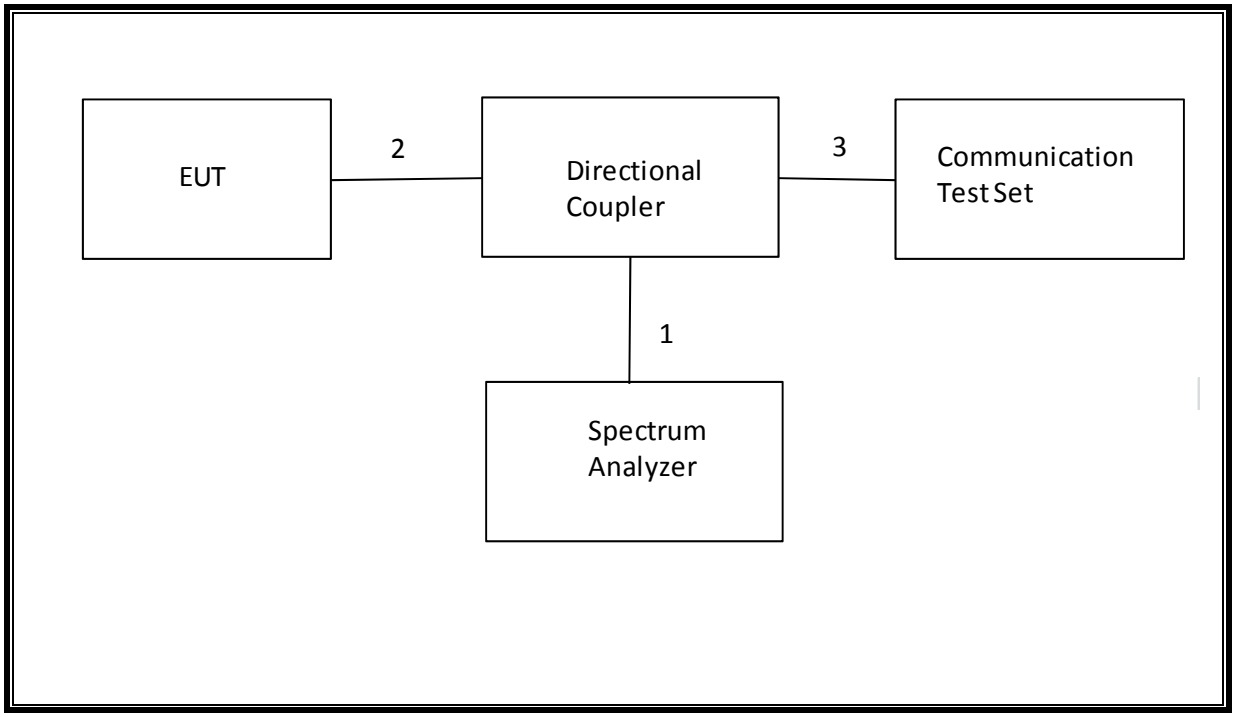

SETUP DIAGRAM FOR TESTS (RADIATED TEST SETUP)

UL VERIFICATION SERVICES INC. FORM NO: CCSUP4701I
47173 BENICIA STREET, FREMONT, CA 94538, USA TEL: (510) 771-1000 FAX: (510) 661-0888

This report shall not be reproduced except in full, without the written approval of UL Verification Services Inc.

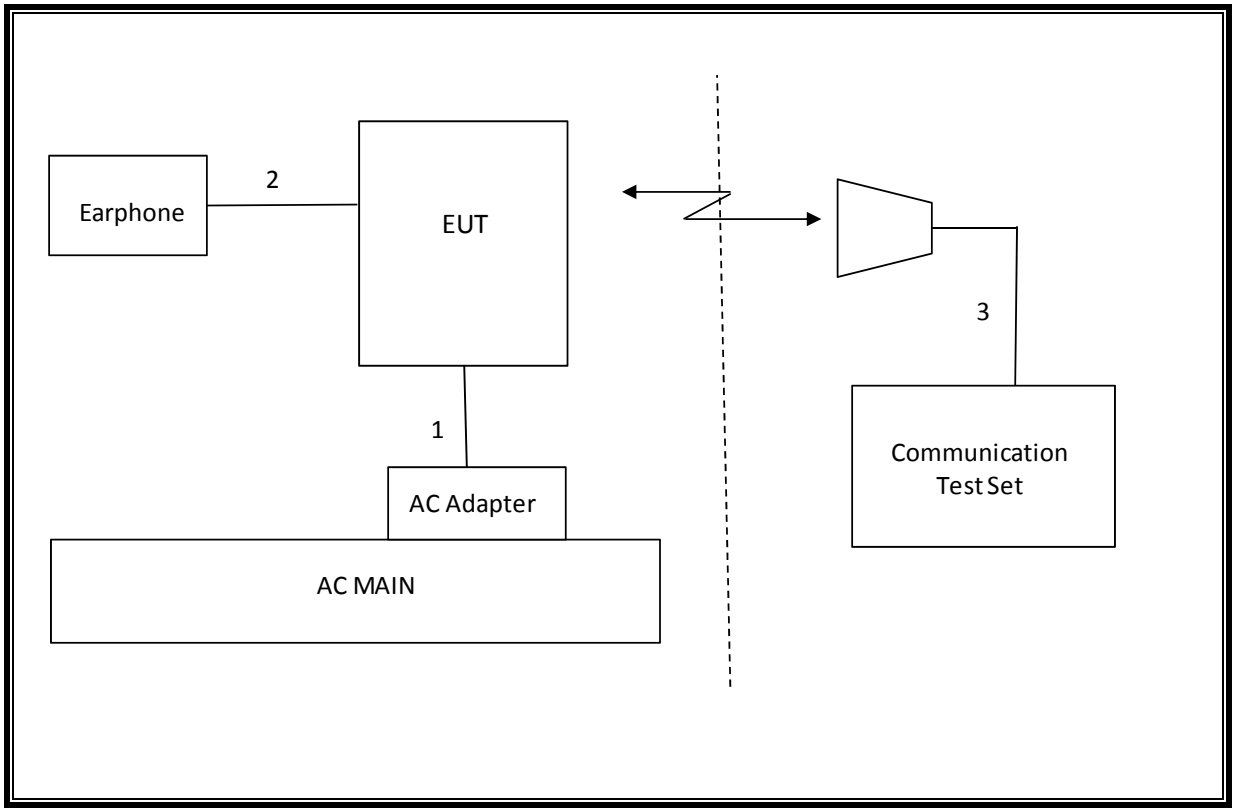

UL VERIFICATION SERVICES INC. FORM NO: CCSUP4701I
47173 BENICIA STREET, FREMONT, CA 94538, USA TEL: (510) 771-1000 FAX: (510) 661-0888

This report shall not be reproduced except in full, without the written approval of UL Verification Services Inc.

6. TEST AND MEASUREMENT EQUIPMENT

The following test and measurement equipment was utilized for the tests documented in this report:

TEST EQUIPMENT LIST				
Description	**Manufacturer**	**Model**	**Asset**	**Cal Due**
Spectrum Analyzer, 44 GHz	Agilent / HP	E4446A	C01179	02/26/15
Antenna, Bilog, 2 GHz	Sunol Sciences	JB1	C01011	08/14/15
Antenna, Horn, 18 GHz	EMCO	3115	C00783	10/25/14
Antenna, Horn, 18 GHz	EMCO	3115	C00784	10/25/14
Highpass Filter, 2.7 GHz	Micro-Tronics	HPM13194	N02687	CNR
Highpass Filter, 1.5 GHz	Micro-Tronics	HPM13193	N02688	CNR
Temperature / Humidity Chamber	Thermotron	SE 600-10-10	C00930	01/09/15
Communications Test Set	R&S	CMW500	T159	07/02/15
DC power supply, 8 V @ 3 A or 15 V	Agilent / HP	E3610A	None	CNR
Vector signal generator, 6 GHz	Agilent / HP	E4438C	None	07/06/15
Antenna, Tuned Dipole 400~1000	ETS	3121C DB4	C00993	02/14/15
Directional Coupler	RF-Lambda	RFDC5M06G15	None	CNR
Antenna, Horn, 26.5 GHz	ARA	MWH-1826/B	C00589	12/17/14

UL VERIFICATION SERVICES INC. FORM NO: CCSUP4701I
47173 BENICIA STREET, FREMONT, CA 94538, USA TEL: (510) 771-1000 FAX: (510) 661-0888

This report shall not be reproduced except in full, without the written approval of UL Verification Services Inc.

7. Summary Table

FCC Part Section	RSS Section(s)	Test Description	Test Limit	Test Condition	Test Result	Worst case
2.1049	N/A	Occupied Band width (99%)	N/A	Conducted	Pass	247.5 kHz
22.917(a) 24.238(a)	RSS-132(4.5.1) RSS-133(6.5.1) RSS-139(6.5.1)	Band Edge / Conducted Spurious Emission	-13dBm		Pass	-17.6 dBm
2.1046	N/A	Conducted output power	N/A		Pass	32.4 dBm
22.355 24.235	RSS-132(4.3) RSS-133(6.3) RSS-139(6.3) RSS-199(4.3)	Frequency Stability	2.5PPM		Pass	0.79 PPM
22.913(a)(2)	RSS-132(4.4)	Effective Radiated Power	38 dBm	Radiated	Pass	30.70 dBm
24.232(c)	RSS-133(6.4) RSS-199(4.4)	Equivalent Isotropic Radiated Power	33dBm		Pass	23.35 dBm
22.917(a) 24.238(a)	RSS-132(4.5.1) RSS-133(6.5.1) RSS-139(6.5.1)	Radiated Spurious Emission	-13dBm		Pass	-30.3 dBm

UL VERIFICATION SERVICES INC. FORM NO: CCSUP4701I
47173 BENICIA STREET, FREMONT, CA 94538, USA TEL: (510) 771-1000 FAX: (510) 661-0888

This report shall not be reproduced except in full, without the written approval of UL Verification Services Inc.

8. RF POWER OUTPUT VERIFICATION

8.1. GSM/GPRS/EDGE

Function: Menu select > GSM Mobile Station > GSM 850/900/1800/1900

Press Connection control to choose the different menus

Press RESET > choose all to reset all settings

Connection Press Signal Off to turn off the signal and change settings

Network Support > GSM+GPRS or GSM+EGPRS

Main Service > Packet Data

Service selection > Test Mode A – Auto Slot Config. off

MS Signal Press Slot Config bottom on the right twice to select and change the number of time slots and power setting

> Slot configuration > Uplink/Gamma

> 33 dBm for GPRS 850/900

> 30 dBm for GPRS1800/1900

BS Signal Enter the same channel number for TCH channel (test channel) and BCCH channel

Frequency Offset > + 0 Hz

Mode > BCCH and TCH

BCCH Level > -85 dBm (May need to adjust if link is not stable)

BCCH Channel > choose desire test channel [Enter the same channel number for TCH channel (test channel) and BCCH channel]

Channel Type > Off

P0> 4 dB

Slot Config > Unchanged (if already set under MS Signal)

TCH > choose desired test channel

Hopping > Off

Main Timeslot > 3 (Default)

Network Coding Scheme > CS4 (GPRS) and MCS5 ~ MCS9 (EGPRS)

Bit Stream > 2E9-1PSR Bit Pattern

AF/RF Enter appropriate offsets for Ext. Att. Output and Ext. Att. Input

Connection Press Signal On to turn on the signal and change settings

UL VERIFICATION SERVICES INC. FORM NO: CCSUP4701I
47173 BENICIA STREET, FREMONT, CA 94538, USA TEL: (510) 771-1000 FAX: (510) 661-0888

This report shall not be reproduced except in full, without the written approval of UL Verification Services Inc.

8.1.1. GSM OUTPUT POWER RESULT

Band	Mode	Ch.	f(MHz)	1 time slot	2 time slot	3 time slot	4 time slot
				Peak (dBm)	Peak (dBm)	Peak (dBm)	Peak (dBm)
GSM850	GMSK	128	824.2	32.3			
		190	836.6	32.4			
		251	848.8	32.4			
	GPRS	128	824.2	32.3	31.0	28.8	26.6
		190	836.6	32.4	31.0	28.9	26.7
		251	848.8	32.4	31.0	28.9	26.7
	EGPRS	128	824.2				
		190	836.6				
		251	848.8				
GSM1900	GMSK	512	1850.2	29.6			
		661	1880	29.6			
		810	1909.8	29.5			
	GPRS	512	1850.2	29.6	27.5	25.8	23.7
		661	1880	29.6	27.5	25.9	23.7
		810	1909.8	29.5	27.5	25.8	23.6
	EGPRS	512	1850.2				
		661	1880				
		810	1909.8				

UL VERIFICATION SERVICES INC. FORM NO: CCSUP4701I
47173 BENICIA STREET, FREMONT, CA 94538, USA TEL: (510) 771-1000 FAX: (510) 661-0888

This report shall not be reproduced except in full, without the written approval of UL Verification Services Inc.

9. PEAK TO AVERAGE RATIO

Test Procedure

Per KDB 971168 D01 Power Meas License Digital Systems v02r01

Test Spec

In addition, when the transmitter power is measured in terms of average value, the peak-to-average ratio of the power shall not exceed 13 dB.

UL VERIFICATION SERVICES INC. FORM NO: CCSUP4701I
47173 BENICIA STREET, FREMONT, CA 94538, USA TEL: (510) 771-1000 FAX: (510) 661-0888

This report shall not be reproduced except in full, without the written approval of UL Verification Services Inc.

9.1. CONDUCTED PEAK TO AVERAGE RESULT

Band GSM 1900	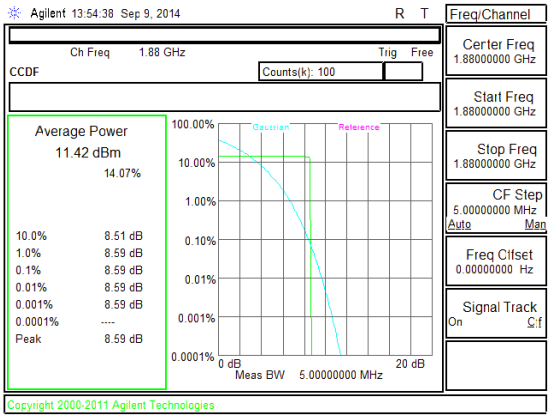 Mid channel
Band GSM 850	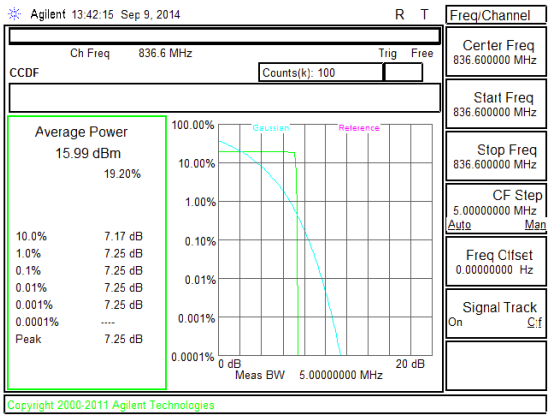 Mid channel

UL VERIFICATION SERVICES INC.
47173 BENICIA STREET, FREMONT, CA 94538, USA
TEL: (510) 771-1000
FORM NO: CCSUP4701I
FAX: (510) 661-0888

This report shall not be reproduced except in full, without the written approval of UL Verification Services Inc.

10. LIMITS AND CONDUCTED RESULTS

10.1. OCCUPIED BANDWIDTH

RULE PART(S)

FCC: §2.1049

LIMITS

For reporting purposes only

TEST PROCEDURE

The transmitter output was connected to a calibrated coaxial cable and coupler, the other end of which was connected to a spectrum analyzer. The occupied bandwidth was measured with the spectrum analyzer at the low, middle and high channel in each band. The -26dB bandwidth was also measured and recorded.

(KDB 971168 D01 Power Meas License Digital Systems v02r01 - 06/07/2013)

UL VERIFICATION SERVICES INC. FORM NO: CCSUP4701I
47173 BENICIA STREET, FREMONT, CA 94538, USA TEL: (510) 771-1000 FAX: (510) 661-0888

This report shall not be reproduced except in full, without the written approval of UL Verification Services Inc.

10.1.1. OCCUPIED BANDWIDTH RESULTS

Band	Mode	Channel	f (MHz)	99% BW (KHz)	-26dB BW (KHz)
GSM850	GMSK	128	824.2		
		190	836.6		
		251	848.8		
	GPRS	128	824.2	245.8	314.9
		190	836.6	247.5	317.9
		251	848.8	246.6	320.4
GSM1900	GMSK	512	1850.2		
		661	1880		
		810	1909.8		
	GPRS	512	1850.2	245.1	311.0
		661	1880	243.0	316.6
		810	1909.8	244.4	319.0

UL VERIFICATION SERVICES INC. FORM NO: CCSUP4701I
47173 BENICIA STREET, FREMONT, CA 94538, USA TEL: (510) 771-1000 FAX: (510) 661-0888

This report shall not be reproduced except in full, without the written approval of UL Verification Services Inc.

10.1.1. OCCUPIED BANDWIDTH PLOTS

Band GSM 1900 GPRS	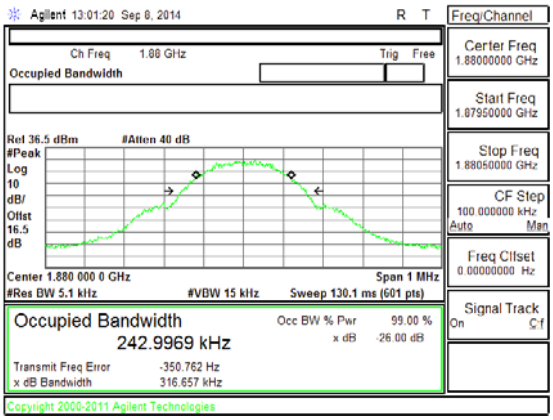 Band GSM1900 GPRS OBW Mid channel
Band GSM 850 GPRS	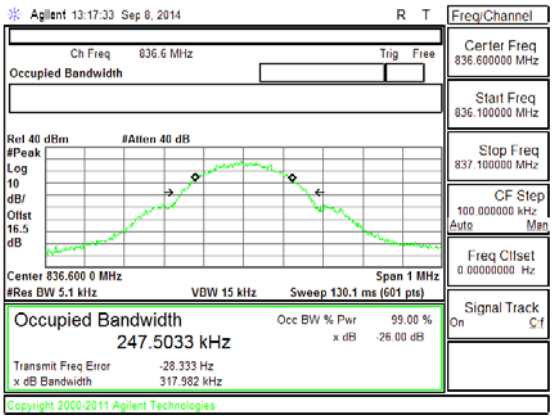 Band GSM850 GPRS OBW Mid channel

This report shall not be reproduced except in full, without the written approval of UL Verification Services Inc.

11. BAND EDGE EMISSIONS

RULE PART(S)

FCC: §22.359 and §24.238

LIMITS

The power of any emission outside of the authorized operating frequency ranges must be attenuated below the transmitting power (P) by a factor of at least 43 + 10 log (P) dB.

TEST PROCEDURE

Per KDB 971168 D01 Power Meas License Digital Systems v02r01
The transmitter output was connected to an Agilent 8960 or a CMW500 Test Set and configured to operate at maximum power. The band edge emissions were measured at the required operating frequencies in each band on the Spectrum Analyzer.

UL VERIFICATION SERVICES INC. FORM NO: CCSUP4701I
47173 BENICIA STREET, FREMONT, CA 94538, USA TEL: (510) 771-1000 FAX: (510) 661-0888

This report shall not be reproduced except in full, without the written approval of UL Verification Services Inc.

11.1.1. BAND EDGE PLOTS

Band GSM 1900 GPRS	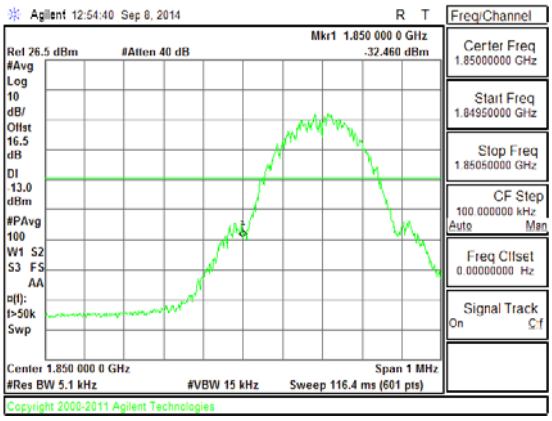 Band GSM1900 GPRS CBE Low channel	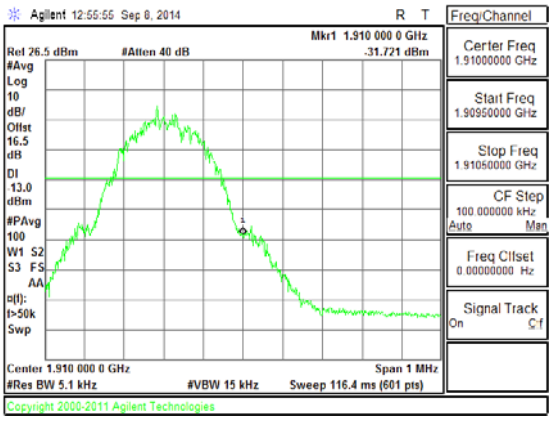 Band GSM1900 GPRS CBE High channel

This report shall not be reproduced except in full, without the written approval of UL Verification Services Inc.

Band GSM 850 GPRS	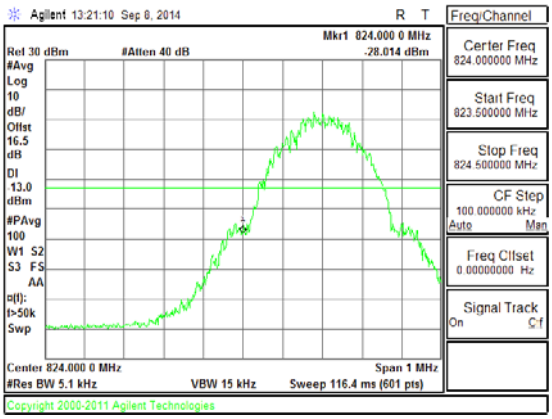 Band GSM850 GPRS CBE Low channel	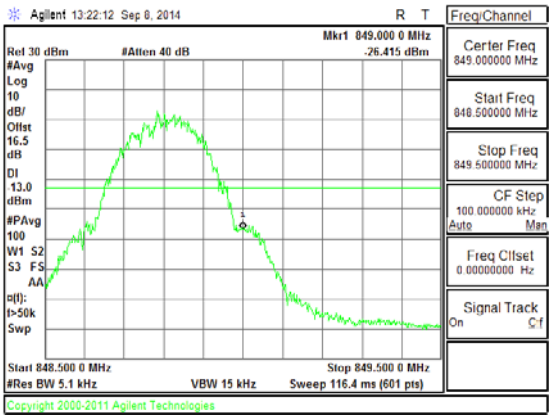 Band GSM850 GPRS CBE High channel

This report shall not be reproduced except in full, without the written approval of UL Verification Services Inc.

11.2. OUT OF BAND EMISSIONS

RULE PART(S)

FCC: §2.1051, §22.901, §22.917, and §24.238

LIMITS

The power of any emission outside of the authorized operating frequency ranges must be attenuated below the transmitting power (P) by a factor of at least 43 + 10 log (P) dB.

TEST PROCEDURE

Per KDB 971168 D01 Power Meas License Digital Systems v02r01

The RF output of the transmitter was connected to a spectrum analyzer through a calibrated coaxial cable. Sufficient scans were taken to show the out-of-band Emissions, if any, up to 10th harmonic. Multiple sweeps were recorded in maximum hold mode using a peak detector to ensure that the worst-case emissions were caught.

RESULTS

UL VERIFICATION SERVICES INC. FORM NO: CCSUP4701I
47173 BENICIA STREET, FREMONT, CA 94538, USA TEL: (510) 771-1000 FAX: (510) 661-0888

This report shall not be reproduced except in full, without the written approval of UL Verification Services Inc.

11.2.1. OUT OF BAND EMISSIONS RESULT

Band	Mode	f (MHz)	Spur (dBm)	Spec (dBm)	Delta (dB)
GSM850	GMSK	824.2			
		836.6			
		848.8			
	GPRS	824.2	-17.9	-13	-4.9
		836.6	-18.1	-13	-5.1
		848.8	-17.9	-13	-4.9
GSM1900	GMSK	1850.2			
		1880			
		1909.8			
	GPRS	1850.2	-18.2	-13	5.2
		1880	-17.6	-13	-4.6
		1909.8	-18.3	-13	-5.3

UL VERIFICATION SERVICES INC. FORM NO: CCSUP4701I
47173 BENICIA STREET, FREMONT, CA 94538, USA TEL: (510) 771-1000 FAX: (510) 661-0888

This report shall not be reproduced except in full, without the written approval of UL Verification Services Inc.

11.2.2. OUT OF BAND EMISSIONS PLOTS

Band GSM 1900 GPRS	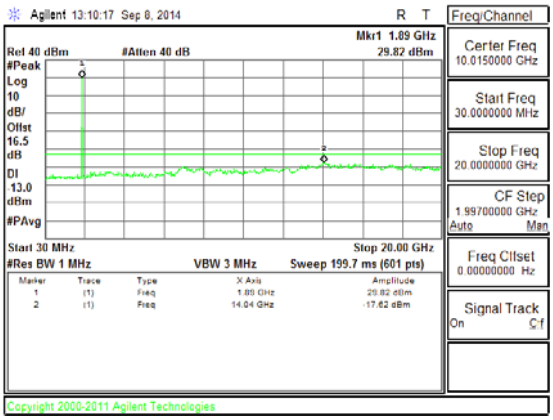 Band GSM1900 GPRS CSE Mid channel

This report shall not be reproduced except in full, without the written approval of UL Verification Services Inc.

Band GSM 850 GPRS	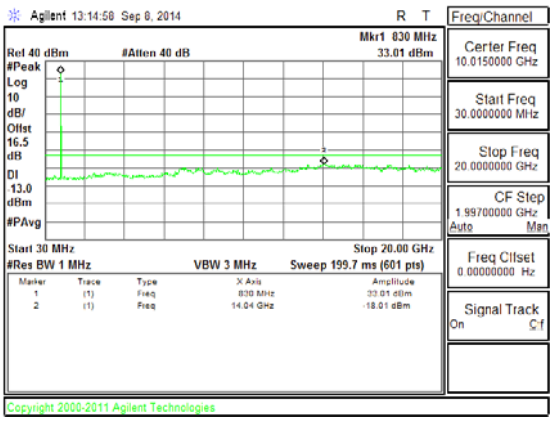 Band GSM850 GPRS CSE Mid channel

This report shall not be reproduced except in full, without the written approval of UL Verification Services Inc.

11.3. FREQUENCY STABILITY

RULE PART(S)

FCC: §2.1055, §22.355 and §24.235

LIMITS

§22.355 - The carrier frequency shall not depart from the reference frequency in excess of ±2.5 ppm for mobile stations.

§24.235 - The frequency stability shall be sufficient to ensure that the fundamental emission stays within the authorized frequency block.

TEST PROCEDURE

Per KDB 971168 D01 Power Meas License Digital Systems v02r01

RESULTS

See the following pages.

UL VERIFICATION SERVICES INC. FORM NO: CCSUP4701I
47173 BENICIA STREET, FREMONT, CA 94538, USA TEL: (510) 771-1000 FAX: (510) 661-0888

This report shall not be reproduced except in full, without the written approval of UL Verification Services Inc.

11.3.1. FREQUENCY STABILITY RESULTS

GSM850, Channel 162, Freq: 837MHz – MID CHANNEL

Reference Frequency: Cell Mid Channel 837.0 MHz @ 20ºC Limit: +- 2.5 ppm = 2092.500 Hz				
Power Supply (Vdc)	Environment Temperature (*C)	Frequency Deviation Measureed with Time Elapse (MHz)	Delta (ppm)	Limit (ppm)
3.80	50	837.000021	0.007	2.5
3.80	40	837.000017	0.012	2.5
3.80	30	836.999983	0.052	2.5
3.80	***20***	***837.000027***	***0***	***2.5***
3.80	10	837.000014	0.016	2.5
3.80	0	837.000027	0.000	2.5
3.80	-10	837.000026	0.001	2.5
3.80	-20	837.000046	-0.023	2.5
3.80	-30	837.000037	-0.012	2.5

Reference Frequency: Mid Channel 837 MHz @ 20ºC Limit: +- 2.5 ppm = 2092.500 Hz				
Power Supply (Vdc)	Environment Temperature (*C)	Frequency Deviation Measureed with Time Elapse	Delta (ppm)	Limit (ppm)
3.80	***20***	***837.000027***	***0.00000***	***2.5***
4.30	20	836.999991	*0.04243*	2.5
3.4(end volt)	20	837.000015	*0.01392*	2.5

UL VERIFICATION SERVICES INC. FORM NO: CCSUP4701I
47173 BENICIA STREET, FREMONT, CA 94538, USA TEL: (510) 771-1000 FAX: (510) 661-0888

This report shall not be reproduced except in full, without the written approval of UL Verification Services Inc.

GSM1900, Channel 600 Freq: 1880MHz– MID CHANNEL

Reference Frequency: PC S Mid Channel 1880MHz @ 20°C Limit: to stay +- 2.5 ppm = 4700.000 Hz				
Power Supply (Vdc)	Environment Temperature (°C)	Frequency Deviation Measureed with Time Elapse		
		(MHz)	Delta (ppm)	Limit (ppm)
3.80	50	1879.999943	0.005	2.5
3.80	40	1879.999942	0.005	2.5
3.80	30	1879.999949	0.002	2.5
3.80	***20***	***1879.999952***	***0***	***2.5***
3.80	10	1880.000047	-0.051	2.5
3.80	0	1880.0001	-0.079	2.5
3.80	-10	1879.999947	0.003	2.5
3.80	-20	1880.000052	-0.053	2.5
3.80	-30	1880.000052	-0.053	2.5

Reference Frequency: PCS Mid Channel 1880 MHz @ 20°C Limit: to stay +- 2.5 ppm = 4700.000 Hz				
Power Supply (Vdc)	Environment Temperature (°C)	Frequency Deviation Measureed with Time Elapse		
		(MHz)	Delta (ppm)	Limit (ppm)
3.80	***20***	***1879.999952***	***0***	***2.5***
4.30	20	***1879.999956***	*-0.002*	2.5
3.4(end volt)	20	1880.000029	*-0.041*	2.5

UL VERIFICATION SERVICES INC. FORM NO: CCSUP4701I
47173 BENICIA STREET, FREMONT, CA 94538, USA TEL: (510) 771-1000 FAX: (510) 661-0888

This report shall not be reproduced except in full, without the written approval of UL Verification Services Inc.

12. RADIATED TEST RESULTS

12.1. RADIATED POWER (ERP & EIRP)

RULE PART(S)

FCC: §2.1046, §22.913 and §24.232.

LIMITS

22.913(a) - The ERP of mobile transmitters and auxiliary test transmitters must not exceed 7 Watts.

24.232(c) - Mobile/portable stations are limited to 2 watts e.i.r.p. peak power and the equipment must employ means to limit the power to the minimum necessary for successful communications.

In addition, when the transmitter power is measured in terms of average value, the peak-to-average ratio of the power shall not exceed 13dB.

TEST PROCEDURE

ANSI / TIA / EIA 603C Clause 2.2.17; PSA setting reference to 971168 D01 v02r01

For peak power measurement with a PSA:

a) Set the RBW ≥ OBW; b) Set VBW ≥ 3 × RBW; c) Set span ≥ 2 x RBW; d) Sweep time = auto couple; e) Detector = peak; f) Ensure that the number of measurement points ≥ span/RBW; g) Trace mode = max hold;

For average power measurement with a PSA:

a) Set span to at least 1.5 times the OBW; b) Set RBW = 1-5% of the OBW, not to exceed 1 MHz; c) Set VBW ≥ 3 x RBW; d) Set number of points in sweep ≥ 2 × span / RBW; e) Sweep time = auto-couple; f) Detector = RMS (power averaging); g) Use free run trigger If burst duty cycle ≥ 98; h) Use trigger to capture bursts If burst duty cycle < 98; i) Trace average at least 100 traces in power averaging (*i.e.*, RMS) mode. j) Compute the power by integrating the spectrum across the OBW of the signal using the instrument's band power measurement function.

TEST RESULTS

12.1.1. ERP/EIRP Results

UL VERIFICATION SERVICES INC. FORM NO: CCSUP4701I
47173 BENICIA STREET, FREMONT, CA 94538, USA TEL: (510) 771-1000 FAX: (510) 661-0888

This report shall not be reproduced except in full, without the written approval of UL Verification Services Inc.

Band	Mode	Channel	f(MHz)	ERP / EIRP	
				dBm	mW
GSM1900	GMSK	512	1850.2		
		661	1880		
		810	1909.8		
	GPRS	512	1850.2	23.35	216.27
		661	1880	22.62	182.81
		810	1909.8	21.77	150.31

Band	Mode	Channel	f(MHz)	ERP / EIRP	
				dBm	mW
GSM850	GMSK	128	824.2		
		190	836.6		
		251	848.8		
	GPRS	128	824.2	29.261	843.53
		190	836.6	29.675	927.9
		251	848.8	30.701	1175.17

UL VERIFICATION SERVICES INC. FORM NO: CCSUP4701I
47173 BENICIA STREET, FREMONT, CA 94538, USA TEL: (510) 771-1000 FAX: (510) 661-0888

This report shall not be reproduced except in full, without the written approval of UL Verification Services Inc.

12.1.2. ERP/EIRP DATA

Band

GSM

1900

GPRS

High Frequency Substitution Measurement
UL Verification Services, Inc. Chamber B

Company: Samsung
Project #: 14I18763
Date: 09/08/14
Test Engineer: K.Kedida
Configuration: EUT only(S/N R31F83G6JE)
Mode: GPRS 1900

Test Equipment:
Receiving: Horn T345, and Chamber B SMA Cables
Substitution: Horn T961 Substitution, 4ft SMA Cable Warehouse

f MHz	SG reading (dBm)	Ant. Pol. (H/V)	Cable Loss (dB)	Antenna Gain (dBi)	EIRP (dBm)	Limit (dBm)	Margin (dB)	Notes
Low								
1850.20	12.10	V	0.85	9.20	20.45	33.0	-12.6	
1850.20	15.00	H	0.85	9.20	23.35	33.0	-9.7	
Mid								
1880.00	11.03	V	0.85	9.00	19.18	33.0	-13.8	
1880.00	14.47	H	0.85	9.00	22.62	33.0	-10.4	
High								
1909.80	10.25	V	0.85	8.85	18.25	33.0	-14.8	
1909.80	13.77	H	0.85	8.85	21.77	33.0	-11.2	

Rev. 3.17.11
Note: For Band 4 EIRP limit is 30dBm

UL VERIFICATION SERVICES INC. FORM NO: CCSUP4701I
47173 BENICIA STREET, FREMONT, CA 94538, USA TEL: (510) 771-1000 FAX: (510) 661-0888

This report shall not be reproduced except in full, without the written approval of UL Verification Services Inc.

Band

GSM

850

GPRS

High Frequency Substitution Measurement
UL Verification Services, Inc. Chamber B

Company: Samsung
Project #: 14I18763
Date: 09/08/14
Test Engineer: K.Kedida
Configuration: EUT only(S/N R31F83G6JE)
Mode: GPRS850

Test Equipment:
Receiving: Sunol T243, and 5m Chamber B N-type Cable
Substitution: Dipole T416, 8ft SMA Cable Warehouse.

f MHz	SG reading (dBm)	Ant. Pol. (H/V)	Cable Loss (dB)	Antenna Gain (dBd)	ERP (dBm)	Limit (dBm)	Margin (dB)	Notes
Low Ch								
824.20	19.36	V	0.9	0.0	18.46	38.5	-20.0	
824.20	30.16	H	0.9	0.0	29.26	38.5	-9.2	
Mid Ch								
836.60	20.20	V	0.9	0.0	19.30	38.5	-19.1	
836.60	30.57	H	0.9	0.0	29.68	38.5	-8.8	
High Ch								
848.80	20.30	V	0.9	0.0	19.40	38.5	-19.0	
848.80	31.60	H	0.9	0.0	30.70	38.5	-7.7	

Rev. 3.17.11
Note: For Band 13/17 ERP limit is 34.77dBm; For Band 26 limit is 50dBm

UL VERIFICATION SERVICES INC.
47173 BENICIA STREET, FREMONT, CA 94538, USA
TEL: (510) 771-1000
FORM NO: CCSUP4701I
FAX: (510) 661-0888

This report shall not be reproduced except in full, without the written approval of UL Verification Services Inc.

12.2. FIELD STRENGTH OF SPURIOUS RADIATION

RULE PART(S)

FCC: §2.1053, §22.917 and §24.238

LIMIT

The power of any emission outside of the authorized operating frequency ranges must be attenuated below the transmitting power (P) by a factor of at least 43 + 10 log (P) dB.

TEST PROCEDURE

For Cellular equipment - Compliance with these rules is based on the use of measurement instrumentation employing a resolution bandwidth of 100 kHz or greater. In the 1 MHz bands immediately outside and adjacent to the frequency block a resolution bandwidth of at least one percent of the emission bandwidth of the fundamental emission of the transmitter may be employed. A narrower resolution bandwidth is permitted in all cases to improve measurement accuracy provided the measured power is integrated over the full required measurement bandwidth (i.e. 100 kHz or 1 percent of emission bandwidth, as specified). The emission bandwidth is defined as the width of the signal between two points, one below the carrier center frequency and one above the carrier center frequency, outside of which all emissions are attenuated at least 26 dB below the transmitter power.

For PCS equipment - Compliance with these rules is based on the use of measurement instrumentation employing a resolution bandwidth of 1 MHz or greater. However, in the 1 MHz bands immediately outside and adjacent to the frequency block a resolution bandwidth of at least one percent of the emission bandwidth of the fundamental emission of the transmitter may be employed. A narrower resolution bandwidth is permitted in all cases to improve measurement accuracy provided the measured power is integrated over the full required measurement bandwidth (i.e. 1 MHz or 1 percent of emission bandwidth, as specified). The emission bandwidth is defined as the width of the signal between two points, one below the carrier center frequency and one above the carrier center frequency, outside of which all emissions are attenuated at least 26 dB below the transmitter power.

RESULTS

UL VERIFICATION SERVICES INC. FORM NO: CCSUP4701I
47173 BENICIA STREET, FREMONT, CA 94538, USA TEL: (510) 771-1000 FAX: (510) 661-0888

This report shall not be reproduced except in full, without the written approval of UL Verification Services Inc.

12.2.1. SPURIOUS RADIATION DATA

Compliance Certification Services
Above 1GHz High Frequency Substitution Measurement

Company: Samsung
Project #: 14I18763
Date: 09/08/14
Test Engineer: K. Kedida
Configuration: EUT w/ AC charger, headset(Sample 1950050)
Mode: GPRS 1900

Chamber	Pre-amplifer	Filter	Limit
5m Chamber B	T34 8449B	Filter 1	Part 24

Band	f GHz	SG reading (dBm)	Ant. Pol. (H/V)	Distance (m)	Preamp (dB)	Filter (dB)	EIRP (dBm)	Limit (dBm)	Delta (dB)	Notes
	Low Ch, 1850.2MHz									
GSM	3.705	-15.1	V	3.0	35.4	1.0	-49.5	-13.0	-36.5	
	5.557	-14.3	V	3.0	34.7	1.0	-48.0	-13.0	-35.0	
1900	7.410	-12.8	V	3.0	34.9	1.0	-46.7	-13.0	-33.7	
	3.705	-13.1	H	3.0	35.4	1.0	-47.5	-13.0	-34.5	
	5.557	-13.1	H	3.0	34.7	1.0	-46.8	-13.0	-33.8	
GPRS	7.410	-12.3	H	3.0	34.9	1.0	-46.2	-13.0	-33.2	
	Mid Ch, 1880MHz									
	3.760	-14.5	V	3.0	35.3	1.0	-48.8	-13.0	-35.8	
	5.640	-13.6	V	3.0	34.7	1.0	-47.3	-13.0	-34.3	
	7.520	-12.4	V	3.0	34.9	1.0	-46.3	-13.0	-33.3	
	3.760	-12.9	H	3.0	35.3	1.0	-47.2	-13.0	-34.2	
	5.640	-14.3	H	3.0	34.7	1.0	-48.0	-13.0	-35.0	
	7.520	-12.4	H	3.0	34.9	1.0	-46.4	-13.0	-33.4	
	High Ch, 1909.8MHz									
	3.815	-13.0	V	3.0	35.3	1.0	-47.3	-13.0	-34.3	
	5.723	-14.3	V	3.0	34.7	1.0	-48.0	-13.0	-35.0	
	7.630	-13.8	V	3.0	34.9	1.0	-47.7	-13.0	-34.7	
	3.815	-13.9	H	3.0	35.3	1.0	-48.2	-13.0	-35.2	
	5.723	-12.9	H	3.0	34.7	1.0	-46.7	-13.0	-33.7	
	7.630	-11.7	H	3.0	34.9	1.0	-45.6	-13.0	-32.6	

Rev. 03.03.09
Note: No other emissions were detected above the system noise floor.

UL VERIFICATION SERVICES INC. FORM NO: CCSUP4701I
47173 BENICIA STREET, FREMONT, CA 94538, USA TEL: (510) 771-1000 FAX: (510) 661-0888

This report shall not be reproduced except in full, without the written approval of UL Verification Services Inc.

Compliance Certification Services
Above 1GHz High Frequency Substitution Measurement

Company: Samsung
Project #: 14I18763
Date: 09/08/14
Test Engineer: K. Kedida
Configuration: EUT w/ AC charger, headset(Sample 1950050)
Mode: GPRS850

Chamber	Pre-amplifer	Filter	Limit
5m Chamber B	T34 8449B	Filter 1	Part 24

Band

GSM

850

GPRS

f GHz	SG reading (dBm)	Ant. Pol. (H/V)	Distance (m)	Preamp (dB)	Filter (dB)	EIRP (dBm)	Limit (dBm)	Delta (dB)	Notes
Low Ch, 824.2MHz									
1.648	-4.8	V	3.0	37.4	1.0	-41.1	-13.0	-28.1	
2.473	-20.4	V	3.0	36.4	1.0	-55.8	-13.0	-42.8	
3.297	-19.5	V	3.0	35.8	1.0	-54.3	-13.0	-41.3	
1.648	6.1	H	3.0	37.4	1.0	-30.3	-13.0	-17.3	
2.473	-19.8	H	3.0	36.4	1.0	-55.2	-13.0	-42.2	
3.297	-16.5	H	3.0	35.8	1.0	-51.3	-13.0	-38.3	
Mid Ch, 836.6MHz									
1.673	-8.2	V	3.0	37.3	1.0	-44.5	-13.0	-31.5	
2.510	-17.9	V	3.0	36.4	1.0	-53.2	-13.0	-40.2	
3.346	-18.2	V	3.0	35.8	1.0	-52.9	-13.0	-39.9	
1.673	2.7	H	3.0	37.3	1.0	-33.7	-13.0	-20.7	
2.510	-19.8	H	3.0	36.4	1.0	-55.2	-13.0	-42.2	
3.346	-17.1	H	3.0	35.8	1.0	-51.8	-13.0	-38.8	
High Ch, 848.8MHz									
1.698	-9.9	V	3.0	37.3	1.0	-46.2	-13.0	-33.2	
2.546	-21.2	V	3.0	36.3	1.0	-56.5	-13.0	-43.5	
3.395	-15.0	V	3.0	35.7	1.0	-49.7	-13.0	-36.7	
1.698	0.0	H	3.0	37.3	1.0	-36.3	-13.0	-23.3	
2.546	-18.1	H	3.0	36.3	1.0	-53.4	-13.0	-40.4	
3.395	-15.1	H	3.0	35.7	1.0	-49.8	-13.0	-36.8	

Rev. 03.03.09
Note: No other emissions were detected above the system noise floor.

UL VERIFICATION SERVICES INC. FORM NO: CCSUP4701I
47173 BENICIA STREET, FREMONT, CA 94538, USA TEL: (510) 771-1000 FAX: (510) 661-0888

This report shall not be reproduced except in full, without the written approval of UL Verification Services Inc.