Attachment 8.

- DUT Antenna Information and SAR Test SETUP PHOTOGRAPHS

- DUT Antenna Information

* Antenna pattern (FCC Band)

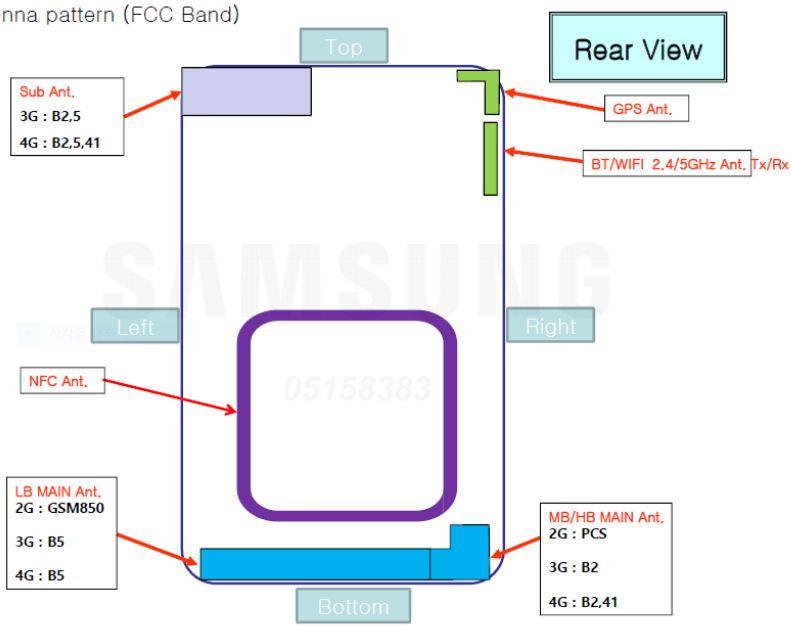

* Distance between Main antenna and edge

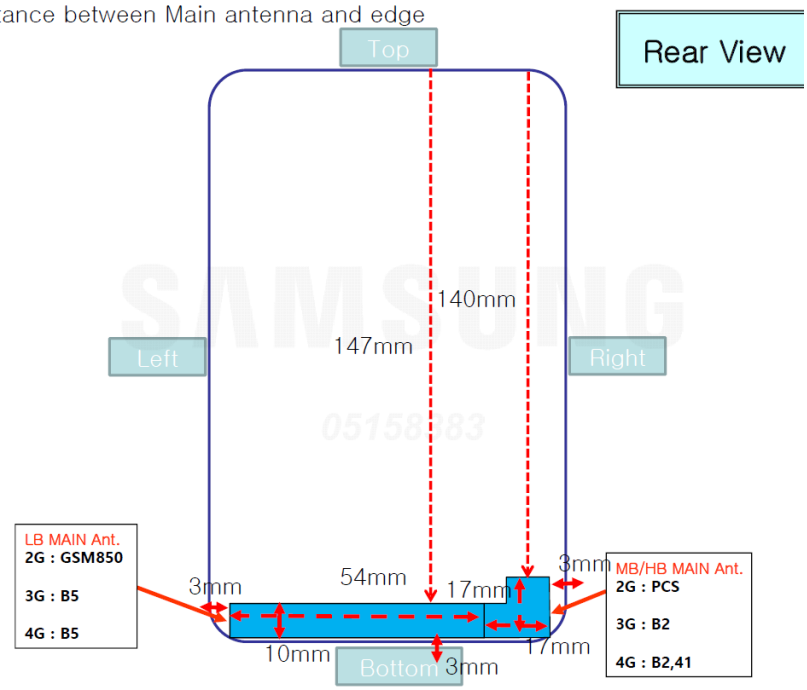

* Distance between Bluetooth & WLAN antenna and edge

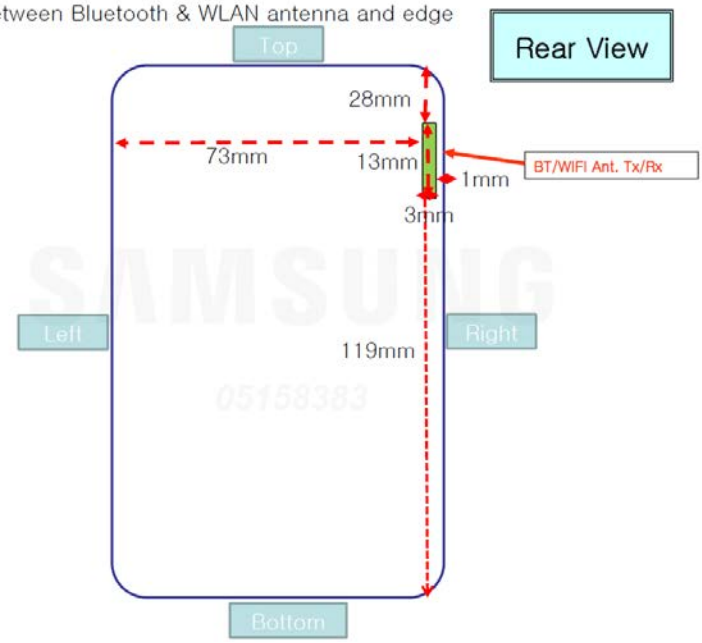

* Diagonal dimension of LCD and device

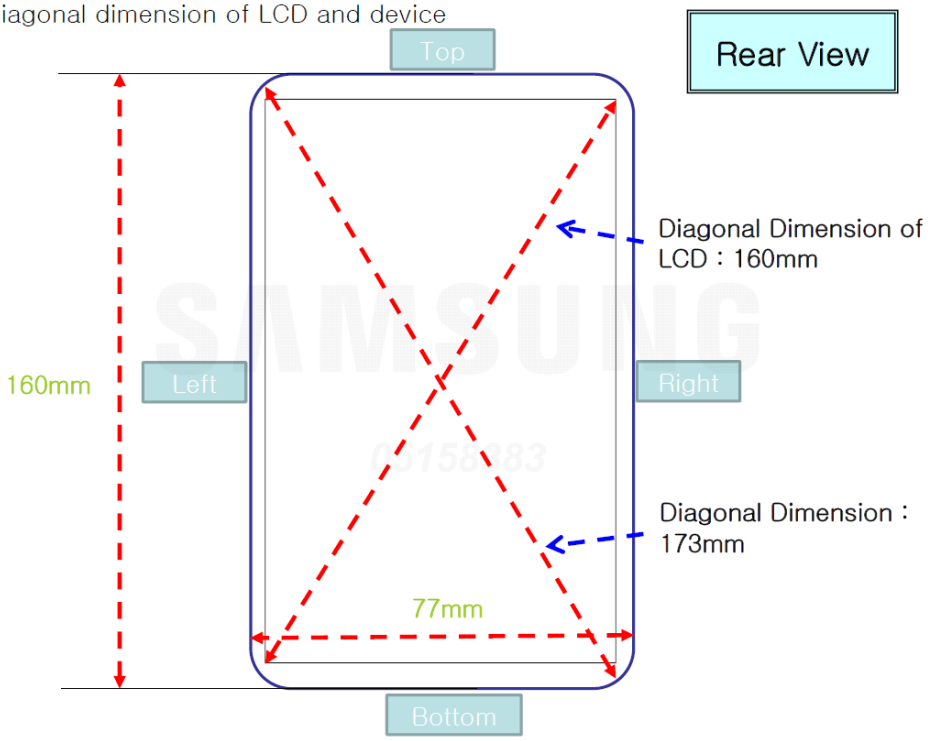

1. Head

1.1 Left All

1.2 Left Touch / Left Tilt

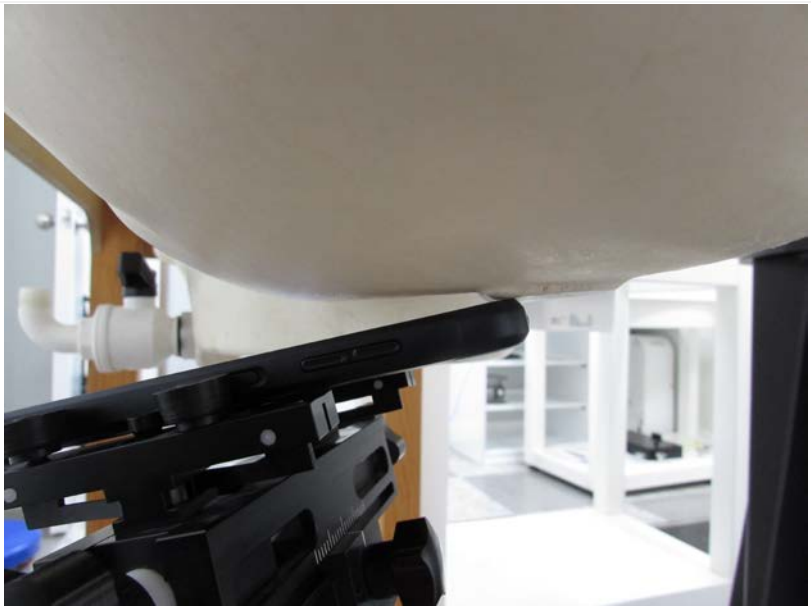

1.3 Right All

1.4 Right Touch / Right Tilt

2. Body

2.1 Body All

2.2 Body Rear

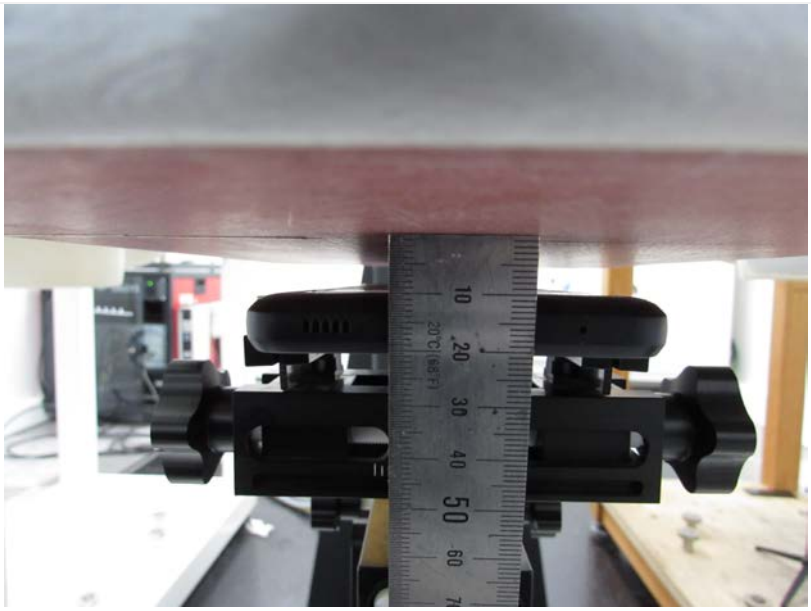

Distance of 10 mm from the EUT

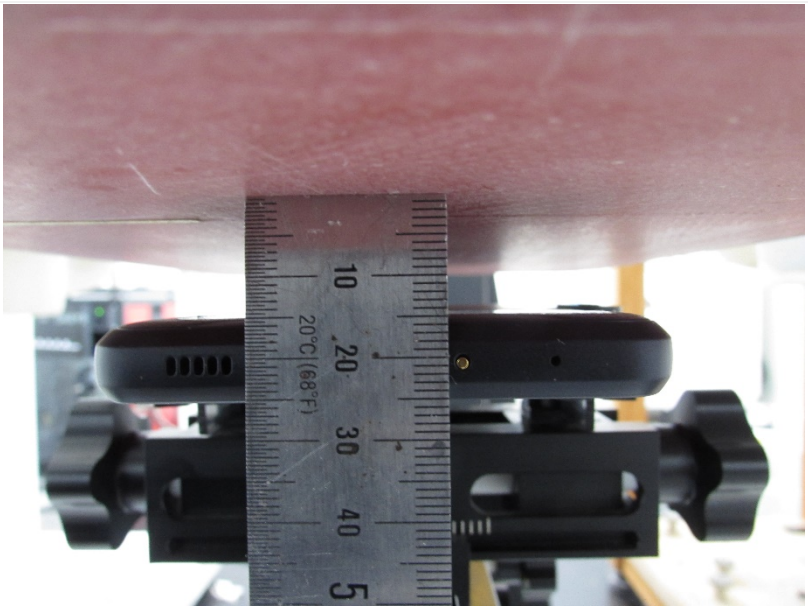

Distance of 15 mm from the EUT

2.3 Body Front

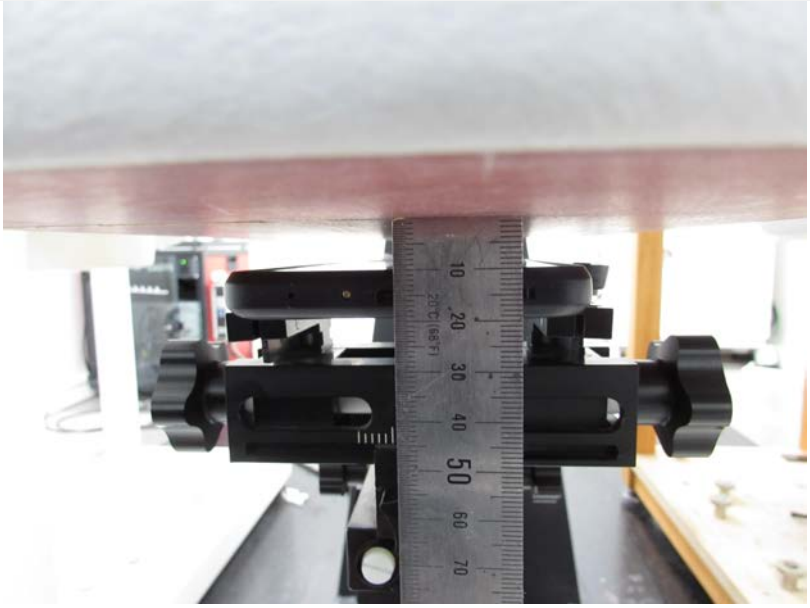

Distance of 10 mm from the EUT

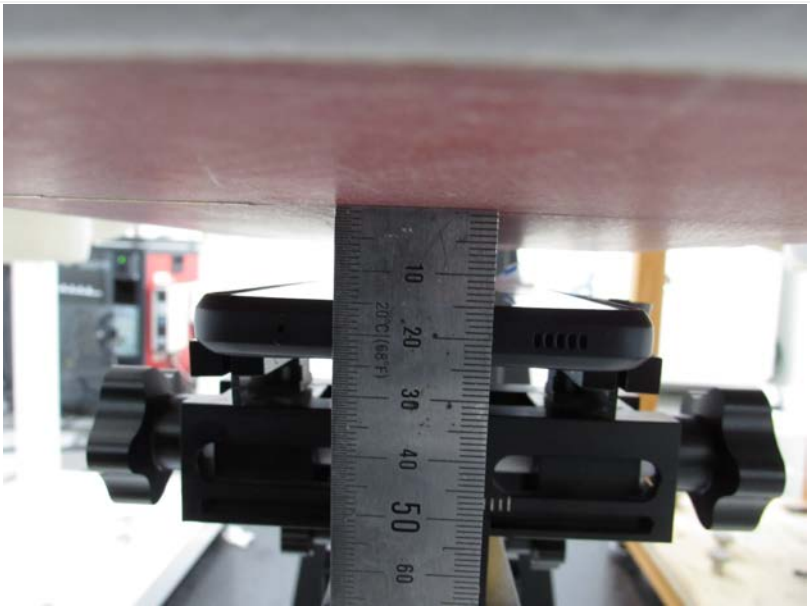

Distance of 15 mm from the EUT

2.4 Body Left

Distance of 10 mm from the EUT

2.5 Body Right

Distance of 10 mm from the EUT

2.6 Body Bottom

Distance of 10 mm from the EUT

3. Phablet

3.1 Phablet SAR Test Setup Rear

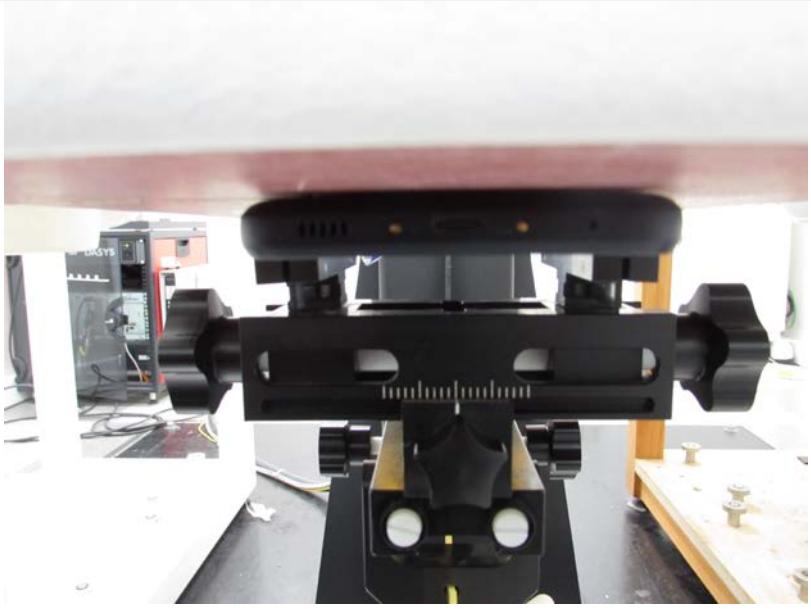

Distance of 0 mm from the EUT

3.2 Phablet SAR Test Setup Front

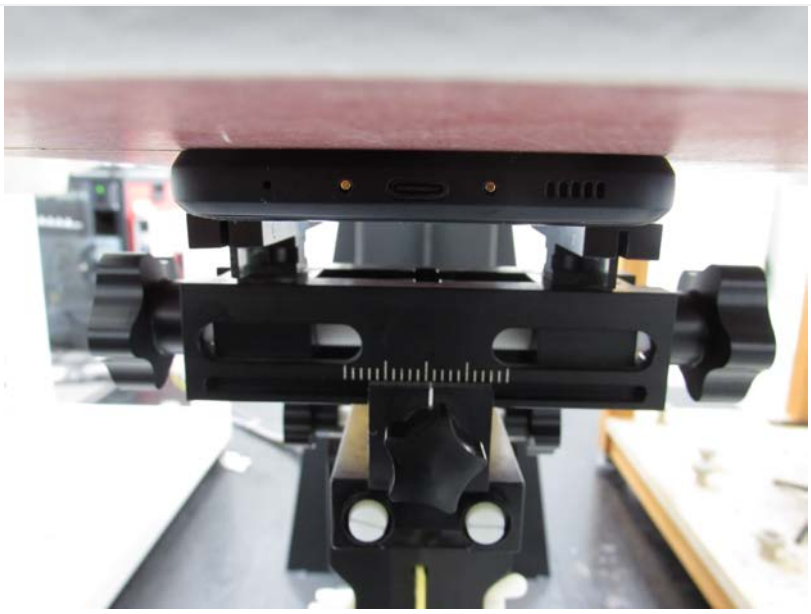

Distance of 0 mm from the EUT

3.3 Phablet SAR Test Setup Left

Distance of 0 mm from the EUT

3.4 Phablet SAR Test Setup Right

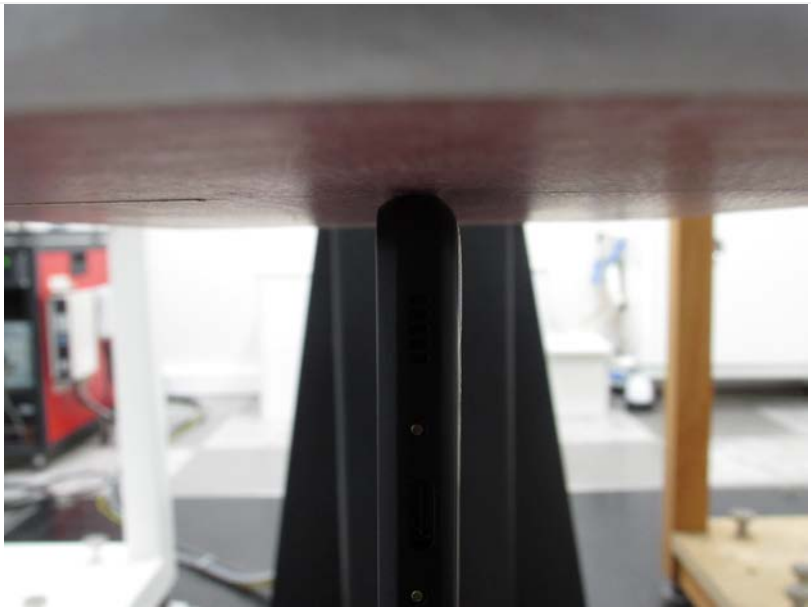

Distance of 0 mm from the EUT