PCTEST ENGINEERING LABORATORY, INC.
7185 Oakland Mills Road, Columbia, MD 21046 USA
Tel. +1.410.290.6652 / Fax +1.410.290.6654
http://www.pctestlab.com

SAR EVALUATION REPORT

Applicant Name:
Samsung Electronics, Co. Ltd.
129, Samsung-ro, Maetan dong,
Yeongtong-gu, Suwon-si
Gyeonggi-do 443-742, Korea

Date of Testing:
06/17/14 - 06/23/14
Test Site/Location:
PCTEST Lab, Columbia, MD, USA
Document Serial No.:
0Y1406161277.A3L

FCC ID: A3LSMG800H

APPLICANT: SAMSUNG ELECTRONICS, CO. LTD.

DUT Type: Portable Handset
Application Type: Certification
FCC Rule Part(s): CFR §2.1093
Model(s): SM-G800H/DS, SM-G800H

Equipment Class	Band & Mode	Tx Frequency	SAR		
			1 gm Head (W/kg)	1 gm Body-Worn (W/kg)	1 gm Hotspot (W/kg)
PCE	GSM/GPRS/EDGE 850	824.20 - 848.80 MHz	0.30	0.42	0.45
PCE	GSM/GPRS/EDGE 1900	1850.20 - 1909.80 MHz	0.73	0.49	0.60
PCE	UMTS 850	826.40 - 846.60 MHz	0.24	0.34	0.34
PCE	UMTS 1900	1852.4 - 1907.6 MHz	0.89	0.60	0.88
DTS	2.4 GHz WLAN	2412 - 2462 MHz	0.56	0.17	0.17
DTS	5.8 GHz WLAN	5745 - 5825 MHz	0.11	0.13	
NII	5.2 GHz WLAN	5180 - 5240 MHz	< 0.1	< 0.1	
NII	5.3 GHz WLAN	5260 - 5320 MHz	< 0.1	0.10	
NII	5.5 GHz WLAN	5500 - 5700 MHz	< 0.1	0.10	
DSS/DTS	Bluetooth	2402 - 2480 MHz	N/A		
Simultaneous SAR per KDB 690783 D01v01r02:			1.07	0.77	0.95

This wireless portable device has been shown to be capable of compliance for localized specific absorption rate (SAR) for uncontrolled environment/general population exposure limits specified in ANSI/IEEE C95.1-1992 and has been tested in accordance with the measurement procedures specified in Section 1.7 of this report; for North American frequency bands only.

I attest to the accuracy of data. All measurements reported herein were performed by me or were made under my supervision and are correct to the best of my knowledge and belief. I assume full responsibility for the completeness of these measurements and vouch for the qualifications of all persons taking them. Test results reported herein relate only to the item(s) tested.

Randy Ortanez
President

ACCREDITED
TESTING LABORATORY
CERTIFICATE #2041.01

© 2014 PCTEST Engineering Laboratory, Inc.

TABLE OF CONTENTS

1 DEVICE UNDER TEST 3

2 INTRODUCTION 7

3 DOSIMETRIC ASSESSMENT 8

4 DEFINITION OF REFERENCE POINTS 9

5 TEST CONFIGURATION POSITIONS FOR HANDSETS 10

6 RF EXPOSURE LIMITS 14

7 FCC MEASUREMENT PROCEDURES 15

8 RF CONDUCTED POWERS 18

9 SYSTEM VERIFICATION 22

10 SAR DATA SUMMARY 24

11 FCC MULTI-TX AND ANTENNA SAR CONSIDERATIONS 29

12 SAR MEASUREMENT VARIABILITY 32

13 EQUIPMENT LIST 33

14 MEASUREMENT UNCERTAINTIES 34

15 CONCLUSION 36

16 REFERENCES 37

APPENDIX A: SAR TEST PLOTS

APPENDIX B: SAR DIPOLE VERIFICATION PLOTS

APPENDIX C: PROBE AND DIPOLE CALIBRATION CERTIFICATES

APPENDIX D: SAR TISSUE SPECIFICATIONS

APPENDIX E: SAR SYSTEM VALIDATION

APPENDIX F: SAR TEST SETUP PHOTOGRAPHS

© 2014 PCTEST Engineering Laboratory, Inc.

1 DEVICE UNDER TEST

1.1 Device Overview

Band & Mode	Operating Modes	Tx Frequency
GSM/GPRS/EDGE 850	Voice/Data	824.20 - 848.80 MHz
GSM/GPRS/EDGE 1900	Voice/Data	1850.20 - 1909.80 MHz
UMTS 850	Voice/Data	826.40 - 846.60 MHz
UMTS 1900	Voice/Data	1852.4 - 1907.6 MHz
2.4 GHz WLAN	Data	2412 - 2462 MHz
5.8 GHz WLAN	Data	5745 - 5825 MHz
5.2 GHz WLAN	Data	5180 - 5240 MHz
5.3 GHz WLAN	Data	5260 - 5320 MHz
5.5 GHz WLAN	Data	5500 - 5700 MHz
Bluetooth	Data	2402 - 2480 MHz

1.2 Nominal and Maximum Output Power Specifications

This device operates using the following maximum and nominal output power specifications. SAR values were scaled to the maximum allowed power to determine compliance per KDB Publication 447498 D01v05.

Mode / Band		Voice (dBm)	Burst Average GMSK (dBm)				Burst Average 8-PSK (dBm)			
		1 TX Slot	*1 TX Slots*	*2 TX Slots*	*3 TX Slots*	*4 TX Slots*	*1 TX Slots*	*2 TX Slots*	*3 TX Slots*	*4 TX Slots*
GSM/GPRS/EDGE 850	Maximum	**33.5**	**33.5**	**31.0**	**29.5**	**28.0**	**27.5**	**27.0**	**25.0**	**24.5**
	Nominal	**33.0**	**33.0**	**30.5**	**29.0**	**27.5**	**27.0**	**26.5**	**24.5**	**24.0**
GSM/GPRS/EDGE 1900	Maximum	**31.5**	**31.5**	**28.5**	**26.5**	**25.0**	**27.5**	**27.0**	**24.5**	**24.0**
	Nominal	**31.0**	**31.0**	**28.0**	**26.0**	**24.5**	**27.0**	**26.5**	**24.0**	**23.5**

Mode / Band		Modulated Average (dBm)			
		3GPP WCDMA Rel 99	*3GPP HSDPA Rel 5*	*3GPP HSUPA Rel 6*	*3GPP DC-HSDPA Rel 8*
UMTS Band 5 (850 MHz)	Maximum	**23.0**	**22.0**	**22.0**	**22.0**
	Nominal	**22.5**	**21.5**	**21.5**	**21.5**
UMTS Band 2 (1900 MHz)	Maximum	**23.0**	**22.5**	**22.5**	**22.5**
	Nominal	**22.5**	**22.0**	**22.0**	**22.0**

Mode / Band		Modulated Average (dBm)
IEEE 802.11b (2.4 GHz)	Maximum	**17.5**
	Nominal	**17.0**
IEEE 802.11g (2.4 GHz)	Maximum	**13.5**
	Nominal	**13.0**
IEEE 802.11n (2.4 GHz)	Maximum	**9.5**
	Nominal	**9.0**
IEEE 802.11a (5 GHz)	Maximum	**10.5**
	Nominal	**10.0**
IEEE 802.11n - 20 MHz BW (5 GHz)	Maximum	**10.5**
	Nominal	**10.0**
IEEE 802.11n - 40 MHz BW (5 GHz)	Maximum	**8.5**
	Nominal	**8.0**
Bluetooth	Maximum	**7.5**
	Nominal	**7.0**
Bluetooth LE	Maximum	**1.5**
	Nominal	**1.0**

© 2014 PCTEST Engineering Laboratory, Inc.

1.3 DUT Antenna Locations

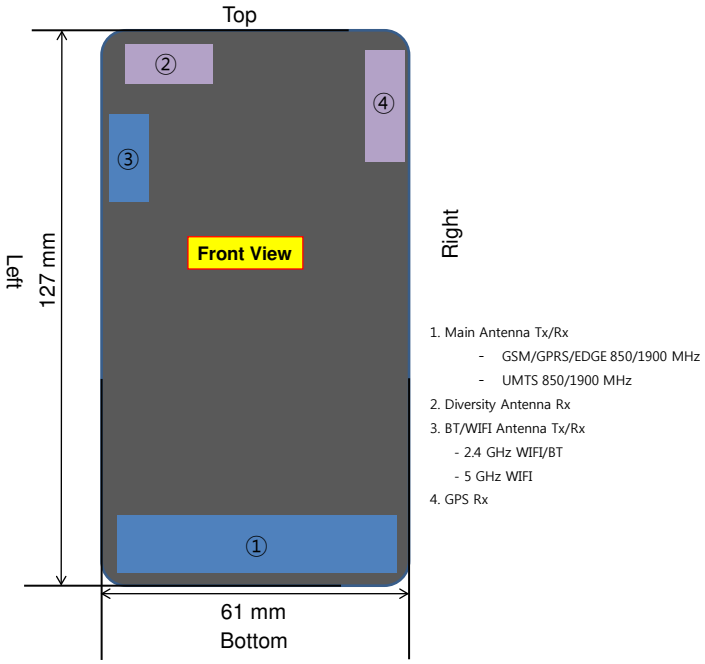

Note: Exact antenna dimensions and separation distances are shown in the Technical Descriptions in the FCC Filing.

Figure 1-1
DUT Antenna Locations

Table 1-1
Mobile Hotspot Sides for SAR Testing

Mobile Hotspot Sides for SAR Testing						
Mode	Back	Front	Top	Bottom	Right	Left
GPRS 850	Yes	Yes	No	Yes	Yes	Yes
GPRS 1900	Yes	Yes	No	Yes	Yes	Yes
UMTS 850	Yes	Yes	No	Yes	Yes	Yes
UMTS 1900	Yes	Yes	No	Yes	Yes	Yes
2.4 GHz WLAN	Yes	Yes	Yes	No	No	Yes

Note: Particular DUT edges were not required to be evaluated for Wireless Router SAR if the edges were greater than 2.5 cm from the transmitting antenna according to FCC KDB Publication 941225 D06v01 guidance, page 2. When the wireless router mode is enabled, all 5 GHz bands are disabled. Therefore 5 GHz WIFI is not considered in this section.

© 2014 PCTEST Engineering Laboratory, Inc.

1.4 Simultaneous Transmission Capabilities

According to FCC KDB Publication 447498 D05v01, transmitters are considered to be transmitting simultaneously when there is overlapping transmission, with the exception of transmissions during network hand-offs with maximum hand-off duration less than 30 seconds.
This device contains multiple transmitters that may operate simultaneously, and therefore requires a simultaneous transmission analysis according to FCC KDB Publication 447498 D01v05 3) procedures.

Table 1-2
Simultaneous Transmission Scenarios

No.	Capable Transmit Configuration	Head	Body-Worn Accessory	Wireless Router	Notes
1	GSM voice + 2.4 GHz WI-FI	Yes	Yes	N/A	
2	GSM voice + 5 GHz WI-FI	Yes	Yes	N/A	
3	GSM voice + 2.4 GHz Bluetooth	N/A	Yes	N/A	
4	UMTS + 2.4 GHz WI-FI	Yes	Yes	Yes	
5	UMTS + 5 GHz WI-FI	Yes	Yes	N/A	
6	UMTS + 2.4 GHz Bluetooth	N/A	Yes	N/A	
7	GPRS/EDGE + 2.4 GHz WI-FI	N/A	N/A	Yes	
8	GPRS/EDGE + 5 GHz WI-FI	N/A	N/A	N/A	Not supported by SW

Notes:
1. 2.4 GHz WLAN, 2.4 GHz Bluetooth, and 5 GHz WLAN share the same antenna path and cannot transmit simultaneously
2. GSM/GPRS/EDGE and UMTS share the same antenna path and cannot transmit simultaneously.
3. When the user utilizes multiple services in UMTS 3G mode it uses multi-Radio Access Bearer or multi-RAB. The power control is based on a physical control channel (Dedicated Physical Control Channel [DPCCH]) and power control will be adjusted to meet the needs of both services. Therefore, the UMTS+WLAN scenario also represents the UMTS Voice/DATA + WLAN Hotspot scenario.
4. Per the manufacturer, WIFI Direct is not expected to be used in conjunction with a held-to-ear or body-worn accessory voice call. Therefore, there are no simultaneous transmission scenarios involving WIFI direct beyond that listed in the above table.
5. When wireless router mode is enabled, all 5GHz bands are disabled.

1.5 SAR Test Exclusions Applied

(A) WIFI/BT

Since Wireless Router operations are not allowed by the chipset firmware using 5 GHz WIFI, only 2.4 GHz WIFI Hotspot SAR tests and combinations are considered for SAR with respect to Wireless Router configurations according to FCC KDB 941225 D06v01.

Per FCC KDB 447498 D01v05, the SAR exclusion threshold for distances <50mm is defined by the following equation:

$$\frac{Max\ Power\ of\ Channel\ (mW)}{Test\ Separation\ Dist\ (mm)} * \sqrt{Frequency(GHz)} \leq 3.0$$

Based on the maximum conducted power of Bluetooth (rounded to the nearest mW) and the antenna to user separation distance, Bluetooth SAR was not required; [(6/10)* √2.441] = 0.9< 3.0. Per KDB Publication 447498 D01v05, the maximum power of the channel was rounded to the nearest mW before calculation.

This device supports 20 MHz and 40 MHz Bandwidths for IEEE 802.11n for 5 GHz WIFI only. IEEE 802.11n was not evaluated for SAR since the average output power of 20 MHz and 40 MHz bandwidths was not more than 0.25 dB higher than the average output power of IEEE 802.11a.

© 2014 PCTEST Engineering Laboratory, Inc.

(B) Licensed Transmitter(s)

GSM/GPRS/EDGE DTM is not supported for US bands. Therefore, the GSM Voice modes in this report do not transmit simultaneously with GPRS/EDGE Data.

This device is only capable of QPSK HSUPA in the uplink. Therefore, no additional SAR tests are required beyond that described for devices with HSUPA in KDB 941225 D01v02.

1.6 Power Reduction for SAR

There is no power reduction used for any band/mode implemented in this device for SAR purposes.

1.7 Guidance Applied

- IEEE 1528-2003
- FCC KDB Publication 941225 D01-D06 (2G/3G and Hotspot)
- FCC KDB Publication 248227 D01v01r02 (SAR Considerations for 802.11 Devices)
- FCC KDB Publication 447498 D01v05 (General SAR Guidance)
- FCC KDB Publication 865664 D01-D02 (SAR Measurements up to 6 GHz)
- October 2013 TCB Workshop Notes (GPRS Testing Considerations)

1.8 Device Serial Numbers

Several samples with identical hardware were used to support SAR testing. The manufacturer has confirmed that the device(s) tested have the same physical, mechanical and thermal characteristics and are within operational tolerances expected for production units.

	Head Serial Number	Body-Worn Serial Number	Hotspot Serial Number
GSM/GPRS/EDGE 850	FL-243-B	FL-243-B	FL-243-B
GSM/GPRS/EDGE 1900	FL-243-B	FL-243-A	FL-243-A
UMTS 850	FL-243-B	FL-243-B	FL-243-B
UMTS 1900	FL-243-B	FL-243-A	FL-243-A
2.4 GHz WLAN	FL-243-E	FL-243-B	FL-243-B
5 GHz WLAN	FL-243-C	FL-243-B	-

© 2014 PCTEST Engineering Laboratory, Inc.

2 INTRODUCTION

The FCC and Industry Canada have adopted the guidelines for evaluating the environmental effects of radio frequency (RF) radiation in ET Docket 93-62 on Aug. 6, 1996 and Health Canada Safety Code 6 to protect the public and workers from the potential hazards of RF emissions due to FCC-regulated portable devices. [1]

The safety limits used for the environmental evaluation measurements are based on the criteria published by the American National Standards Institute (ANSI) for localized specific absorption rate (SAR) in IEEE/ANSI C95.1-1992 Standard for Safety Levels with Respect to Human Exposure to Radio Frequency Electromagnetic Fields, 3 kHz to 300 GHz [3] and Health Canada RF Exposure Guidelines Safety Code 6 [22]. The measurement procedure described in IEEE/ANSI C95.3-2002 Recommended Practice for the Measurement of Potentially Hazardous Electromagnetic Fields - RF and Microwave [4] is used for guidance in measuring the Specific Absorption Rate (SAR) due to the RF radiation exposure from the Equipment Under Test (EUT). These criteria for SAR evaluation are similar to those recommended by the International Committee for Non-Ionizing Radiation Protection (ICNIRP) in Biological Effects and Exposure Criteria for Radiofrequency Electromagnetic Fields," Report No. Vol 74. SAR is a measure of the rate of energy absorption due to exposure to an RF transmitting source. SAR values have been related to threshold levels for potential biological hazards.

2.1 SAR Definition

Specific Absorption Rate is defined as the time derivative (rate) of the incremental energy (dU) absorbed by (dissipated in) an incremental mass (dm) contained in a volume element (dV) of a given density (ρ). It is also defined as the rate of RF energy absorption per unit mass at a point in an absorbing body (see Equation 2-1).

Equation 2-1
SAR Mathematical Equation

$$SAR = \frac{d}{dt}\left(\frac{dU}{dm}\right) = \frac{d}{dt}\left(\frac{dU}{\rho dv}\right)$$

SAR is expressed in units of Watts per Kilogram (W/kg).

$$SAR = \frac{\sigma \cdot E^2}{\rho}$$

where:

σ = conductivity of the tissue-simulating material (S/m)
ρ = mass density of the tissue-simulating material (kg/m^3)
E = Total RMS electric field strength (V/m)

NOTE: The primary factors that control rate of energy absorption were found to be the wavelength of the incident field in relation to the dimensions and geometry of the irradiated organism, the orientation of the organism in relation to the polarity of field vectors, the presence of reflecting surfaces, and whether conductive contact is made by the organism with a ground plane.[6]

© 2014 PCTEST Engineering Laboratory, Inc.

3 DOSIMETRIC ASSESSMENT

3.1 Measurement Procedure

The evaluation was performed using the following procedure compliant to FCC KDB Publication 865664 D01v01 and IEEE 1528-2013:

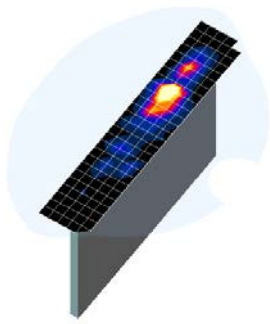

Figure 3-1
Sample SAR Area Scan

1. The SAR distribution at the exposed side of the head or body was measured at a distance no greater than 5.0 mm from the inner surface of the shell. The area covered the entire dimension of the device-head and body interface and the horizontal grid resolution was determined per FCC KDB Publication 865664 D01v01 (See Table 3-1) and IEEE 1528-2013.
2. The point SAR measurement was taken at the maximum SAR region determined from Step 1 to enable the monitoring of SAR fluctuations/drifts during the 1g/10g cube evaluation. SAR at this fixed point was measured and used as a reference value.
3. Based on the area scan data, the peak of the region with maximum SAR was determined by spline interpolation. Around this point, a volume was assessed according to the measurement resolution and volume size requirements of FCC KDB Publication 865664 D01v01 (See Table 3-1) and IEEE 1528-2013. On the basis of this data set, the spatial peak SAR value was evaluated with the following procedure (see references or the DASY manual online for more details):

   a. SAR values at the inner surface of the phantom are extrapolated from the measured values along the line away from the surface with spacing no greater than that in Table 3-1. The extrapolation was based on a least-squares algorithm. A polynomial of the fourth order was calculated through the points in the z-axis (normal to the phantom shell).

   b. After the maximum interpolated values were calculated between the points in the cube, the SAR was averaged over the spatial volume (1g or 10g) using a 3D-Spline interpolation algorithm. The 3D-spline is composed of three one-dimensional splines with the "Not a knot" condition (in x, y, and z directions). The volume was then integrated with the trapezoidal algorithm. One thousand points (10 x 10 x 10) were obtained through interpolation, in order to calculate the averaged SAR.

   c. All neighboring volumes were evaluated until no neighboring volume with a higher average value was found.
4. The SAR reference value, at the same location as step 2, was re-measured after the zoom scan was complete to calculate the SAR drift. If the drift deviated by more than 5%, the SAR test and drift measurements were repeated.

Table 3-1
Area and Zoom Scan Resolutions per FCC KDB Publication 865664 D01v01*

Frequency	Maximum Area Scan Resolution (mm) (Δx_{area}, Δy_{area})	Maximum Zoom Scan Resolution (mm) (Δx_{zoom}, Δy_{zoom})	Maximum Zoom Scan Spatial Resolution (mm)			Minimum Zoom Scan Volume (mm) (x,y,z)
			Uniform Grid	Graded Grid		
			$\Delta z_{zoom}(n)$	$\Delta z_{zoom}(1)$*	$\Delta z_{zoom}(n>1)$*	
≤ 2 GHz	≤ 15	≤ 8	≤ 5	≤ 4	≤ 1.5*$\Delta z_{zoom}(n-1)$	≥ 30
2-3 GHz	≤ 12	≤ 5	≤ 5	≤ 4	≤ 1.5*$\Delta z_{zoom}(n-1)$	≥ 30
3-4 GHz	≤ 12	≤ 5	≤ 4	≤ 3	≤ 1.5*$\Delta z_{zoom}(n-1)$	≥ 28
4-5 GHz	≤ 10	≤ 4	≤ 3	≤ 2.5	≤ 1.5*$\Delta z_{zoom}(n-1)$	≥ 25
5-6 GHz	≤ 10	≤ 4	≤ 2	≤ 2	≤ 1.5*$\Delta z_{zoom}(n-1)$	≥ 22

*Also compliant to IEEE 1528-2013 Table 6

© 2014 PCTEST Engineering Laboratory, Inc.

4 DEFINITION OF REFERENCE POINTS

4.1 EAR REFERENCE POINT

Figure 4-2 shows the front, back and side views of the SAM Twin Phantom. The point "M" is the reference point for the center of the mouth, "LE" is the left ear reference point (ERP), and "RE" is the right ERP. The ERP is 15mm posterior to the entrance to the ear canal (EEC) along the B-M line (Back-Mouth), as shown in Figure 4-1. The plane passing through the two ear canals and M is defined as the Reference Plane. The line N-F (Neck-Front), also called the Reference Pivoting Line, is not perpendicular to the reference plane (see Figure 4-1). Line B-M is perpendicular to the N-F line. Both N-F and B-M lines are marked on the external phantom shell to facilitate handset positioning [5].

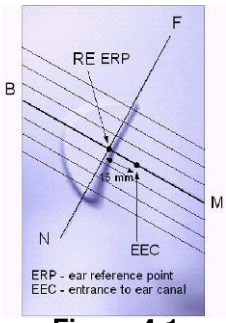

Figure 4-1
Close-Up Side view of ERP

4.2 HANDSET REFERENCE POINTS

Two imaginary lines on the handset were established: the vertical centerline and the horizontal line. The test device was placed in a normal operating position with the acoustic output located along the "vertical centerline" on the front of the device aligned to the "ear reference point" (See Figure 4-3). The acoustic output was than located at the same level as the center of the ear reference point. The test device was positioned so that the "vertical centerline" was bisecting the front surface of the handset at its top and bottom edges, positioning the "ear reference point" on the outer surface of the both the left and right head phantoms on the ear reference point.

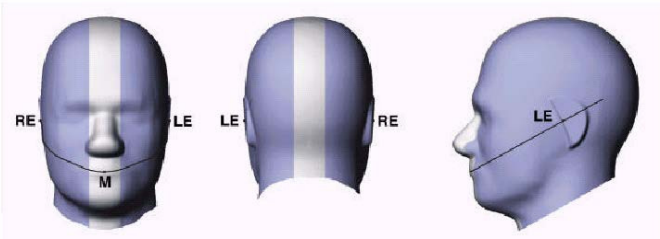

Figure 4-2
Front, back and side view of SAM Twin Phantom

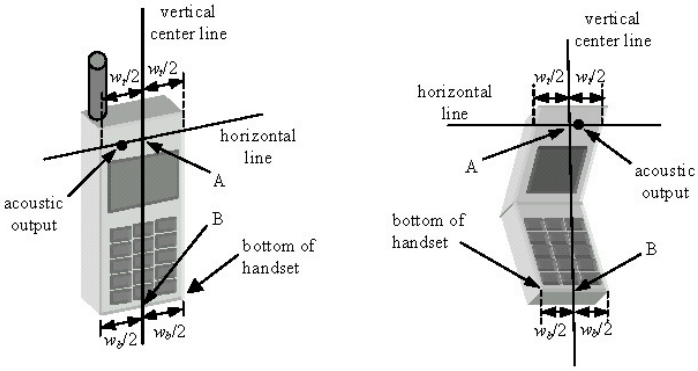

Figure 4-3
Handset Vertical Center & Horizontal Line Reference Points

© 2014 PCTEST Engineering Laboratory, Inc.

5 TEST CONFIGURATION POSITIONS FOR HANDSETS

5.1 Device Holder

The device holder is made out of low-loss POM material having the following dielectric parameters: relative permittivity ε = 3 and loss tangent δ = 0.02.

5.2 Positioning for Cheek

1. The test device was positioned with the device close to the surface of the phantom such that point A is on the (virtual) extension of the line passing through points RE and LE on the phantom (see Figure 5-1), such that the plane defined by the vertical center line and the horizontal line of the phone is approximately parallel to the sagittal plane of the phantom.

Figure 5-1 Front, Side and Top View of Cheek Position

2. The handset was translated towards the phantom along the line passing through RE & LE until the handset touches the pinna.
3. While maintaining the handset in this plane, the handset was rotated around the LE-RE line until the vertical centerline was in the reference plane.
4. The phone was then rotated around the vertical centerline until the phone (horizontal line) was symmetrical was respect to the line NF.
5. While maintaining the vertical centerline in the reference plane, keeping point A on the line passing through RE and LE, and maintaining the device contact with the ear, the device was rotated about the NF line until any point on the handset made contact with a phantom point below the ear (cheek) (See Figure 5-2).

5.3 Positioning for Ear / 15º Tilt

With the test device aligned in the “Cheek Position”:

1. While maintaining the orientation of the phone, the phone was retracted parallel to the reference plane far enough to enable a rotation of the phone by 15degrees.
2. The phone was then rotated around the horizontal line by 15 degrees.
3. While maintaining the orientation of the phone, the phone was moved parallel to the reference plane until any part of the handset touched the head. (In this position, point A was located on the line RE-LE). The tilted position is obtained when the contact is on the pinna. If the contact was at any location other than the pinna, the angle of the phone would then be reduced. In this situation, the tilted position was obtained when any part of the phone was in contact of the ear as well as a second part of the phone was in contact with the head (see Figure 5-2).

© 2014 PCTEST Engineering Laboratory, Inc.

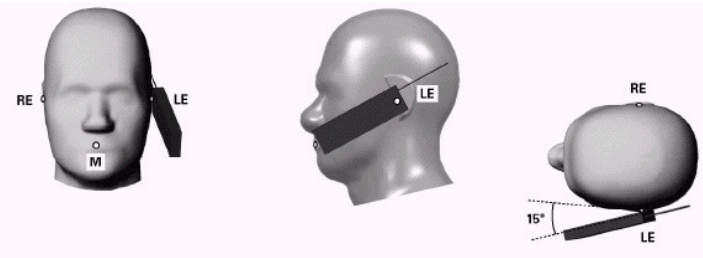

Figure 5-2 Front, Side and Top View of Ear/15º Tilt Position

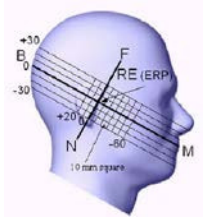

Figure 5-3
Side view w/ relevant markings

5.4 SAR Evaluations near the Mouth/Jaw Regions of the SAM Phantom

Antennas located near the bottom of a phone may require SAR measurements around the mouth and jaw regions of the SAM head phantom. This typically applies to clam-shell style phones that are generally longer in the unfolded normal use positions or to certain older style long rectangular phones. Per IEEE 1528-2013, a rotated SAM phantom is necessary to allow probe access to such regions. Both SAM heads of the TwinSAM-Chin20 are rotated 20 degrees around the NF line. Each head can be removed from the table for emptying and cleaning.

Under these circumstances, the following procedures apply, adopted from the FCC guidance on SAR handsets document FCC KDB Publication 648474 D04_v01. The SAR required in these regions of SAM should be measured using a flat phantom. The phone should be positioned with a separation distance of 4 mm between the ear reference point (ERP) and the outer surface of the flat phantom shell. While maintaining this distance at the ERP location, the low (bottom) edge of the phone should be lowered from the phantom to establish the same separation distance between the peak SAR location identified by the truncated partial SAR distribution measured with the SAM phantom. The distance from the peak SAR location to the phone is determined by the straight line passing perpendicularly through the phantom surface. When it is not feasible to maintain 4 mm separation at the ERP while also establishing the required separation at the peak SAR location, the top edge of the phone will be allowed to touch the phantom with a separation < 4 mm at the ERP. The phone should not be tilted to the left or right while placed in this inclined position to the flat phantom.

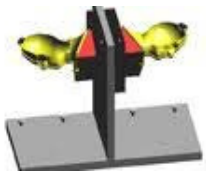

Figure 5-4 Twin SAM Chin20

© 2014 PCTEST Engineering Laboratory, Inc.

5.5 Body-Worn Accessory Configurations

Body-worn operating configurations are tested with the belt-clips and holsters attached to the device and positioned against a flat phantom in a normal use configuration (see Figure 6-5). Per FCC KDB Publication 648474 D04v01, Body-worn accessory exposure is typically related to voice mode operations when handsets are carried in body-worn accessories. The body-worn accessory procedures in FCC KDB Publication 447498 D01v05 should be used to test for body-worn accessory SAR compliance, without a headset connected to it. This enables the test results for such configuration to be compatible with that required for hotspot mode when the body-worn accessory test separation distance is greater than or equal to that required for hotspot mode, when applicable. When the reported SAR for a body-worn accessory, measured without a headset connected to the handset, is > 1.2 W/kg, the highest reported SAR configuration for that wireless mode and frequency band should be repeated for that body-worn accessory with a headset attached to the handset.

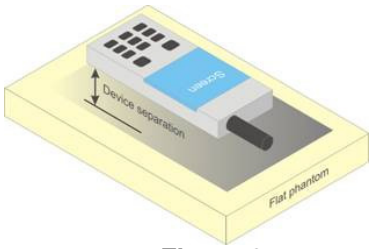

Figure 6-5
Sample Body-Worn Diagram

Accessories for Body-worn operation configurations are divided into two categories: those that do not contain metallic components and those that do contain metallic components. When multiple accessories that do not contain metallic components are supplied with the device, the device is tested with only the accessory that dictates the closest spacing to the body. Then multiple accessories that contain metallic components are tested with the device with each accessory. If multiple accessories share an identical metallic component (i.e. the same metallic belt-clip used with different holsters with no other metallic components) only the accessory that dictates the closest spacing to the body is tested.

Body-worn accessories may not always be supplied or available as options for some devices intended to be authorized for body-worn use. In this case, a test configuration with a separation distance between the back of the device and the flat phantom is used. Test position spacing was documented. Transmitters that are designed to operate in front of a person's face, as in push-to-talk configurations, are tested for SAR compliance with the front of the device positioned to face the flat phantom in head fluid. For devices that are carried next to the body such as a shoulder, waist or chest-worn transmitters, SAR compliance is tested with the accessories, including headsets and microphones, attached to the device and positioned against a flat phantom in a normal use configuration.

5.6 Extremity Exposure Configurations

Devices that are designed or intended for use on extremities or mainly operated in extremity only exposure conditions; i.e., hands, wrists, feet and ankles, may require extremity SAR evaluation. When the device also operates in close proximity to the user's body, SAR compliance for the body is also required. The 1-g body and 10-g extremity SAR Exclusion Thresholds found in KDB Publication 44798 D01v05 should be applied to determine SAR test requirements.

Per KDB Publication 44798 D01v05, Cell phones (handsets) are not normally designed to be used on extremities or operated in extremity only exposure conditions. The maximum output power levels of handsets generally do not require extremity SAR testing to show compliance. Therefore, extremity SAR was not evaluated for this device.

© 2014 PCTEST Engineering Laboratory, Inc.

5.7 Wireless Router Configurations

Some battery-operated handsets have the capability to transmit and receive user data through simultaneous transmission of WIFI simultaneously with a separate licensed transmitter. The FCC has provided guidance in FCC KDB Publication 941225 D06 v01 where SAR test considerations for handsets (L x W ≥ 9 cm x 5 cm) are based on a composite test separation distance of 10 mm from the front, back and edges of the device containing transmitting antennas within 2.5 cm of their edges, determined from general mixed use conditions for this type of devices. Since the hotspot SAR results may overlap with the body-worn accessory SAR requirements, the more conservative configurations can be considered, thus excluding some body-worn accessory SAR tests.

When the user enables the personal wireless router functions for the handset, actual operations include simultaneous transmission of both the WIFI transmitter and another licensed transmitter. Both transmitters often do not transmit at the same transmitting frequency and thus cannot be evaluated for SAR under actual use conditions due to the limitations of the SAR assessment probes. Therefore, SAR must be evaluated for each frequency transmission and mode separately and spatially summed with the WIFI transmitter according to FCC KDB Publication 447498 D01v05 publication procedures. The "Portable Hotspot" feature on the handset was NOT activated during SAR assessments, to ensure the SAR measurements were evaluated for a single transmission frequency RF signal at a time.

© 2014 PCTEST Engineering Laboratory, Inc.

6 RF EXPOSURE LIMITS

6.1 Uncontrolled Environment

UNCONTROLLED ENVIRONMENTS are defined as locations where there is the exposure of individuals who have no knowledge or control of their exposure. The general population/uncontrolled exposure limits are applicable to situations in which the general public may be exposed or in which persons who are exposed as a consequence of their employment may not be made fully aware of the potential for exposure or cannot exercise control over their exposure. Members of the general public would come under this category when exposure is not employment-related; for example, in the case of a wireless transmitter that exposes persons in its vicinity.

6.2 Controlled Environment

CONTROLLED ENVIRONMENTS are defined as locations where there is exposure that may be incurred by persons who are aware of the potential for exposure, (i.e. as a result of employment or occupation). In general, occupational/controlled exposure limits are applicable to situations in which persons are exposed as a consequence of their employment, who have been made fully aware of the potential for exposure and can exercise control over their exposure. This exposure category is also applicable when the exposure is of a transient nature due to incidental passage through a location where the exposure levels may be higher than the general population/uncontrolled limits, but the exposed person is fully aware of the potential for exposure and can exercise control over his or her exposure by leaving the area or by some other appropriate means.

Table 6-1
SAR Human Exposure Specified in ANSI/IEEE C95.1-1992 and Health Canada Safety Code 6

HUMAN EXPOSURE LIMITS		
	UNCONTROLLED ENVIRONMENT *General Population* (W/kg) or (mW/g)	CONTROLLED ENVIRONMENT *Occupational* (W/kg) or (mW/g)
Peak Spatial Average SAR Head	1.6	8.0
Whole Body SAR	0.08	0.4
Peak Spatial Average SAR Hands, Feet, Ankle, Wrists, etc.	4.0	20

1. The Spatial Peak value of the SAR averaged over any 1 gram of tissue (defined as a tissue volume in the shape of a cube) and over the appropriate averaging time.
2. The Spatial Average value of the SAR averaged over the whole body.
3. The Spatial Peak value of the SAR averaged over any 10 grams of tissue (defined as a tissue volume in the shape of a cube) and over the appropriate averaging time.

© 2014 PCTEST Engineering Laboratory, Inc.

7 FCC MEASUREMENT PROCEDURES

Power measurements were performed using a base station simulator under digital average power.

7.1 Measured and Reported SAR

Per FCC KDB Publication 447498 D01v05, When SAR is not measured at the maximum power level allowed for production units, the results must be scaled to the maximum tune-up tolerance limit according to the power applied to the individual channels tested to determine compliance. For simultaneous transmission, the measured aggregate SAR must be scaled according to the sum of the differences between the maximum tune-up tolerance and actual power used to test each transmitter. When SAR is measured at or scaled to the maximum tune-up tolerance limit, the results are referred to as *reported* SAR. The highest *reported* SAR results are identified on the grant of equipment authorization according to procedures in KDB 690783 D01v01r02.

7.2 Procedures Used to Establish RF Signal for SAR

The following procedures are according to FCC KDB Publication 941225 D01 "SAR Measurement Procedures for 3G Devices" v02, October 2007.

The device was placed into a simulated call using a base station simulator in a RF shielded chamber. Establishing connections in this manner ensure a consistent means for testing SAR and are recommended for evaluating SAR [4]. Devices under test were evaluated prior to testing, with a fully charged battery and were configured to operate at maximum output power. In order to verify that the device was tested throughout the SAR test at maximum output power, the SAR measurement system measures a "point SAR" at an arbitrary reference point at the start and end of the 1 gram SAR evaluation, to assess for any power drifts during the evaluation. If the power drift deviated by more than 5%, the SAR test and drift measurements were repeated.

7.3 SAR Measurement Conditions for UMTS

7.3.1 Output Power Verification

Maximum output power is measured on the High, Middle and Low channels for each applicable transmission band according to the general descriptions in section 5.2 of 3GPP TS 34.121, using the appropriate RMC or AMR with TPC (transmit power control) set to all "1s".

Maximum output power is verified on the High, Middle and Low channels according to the general descriptions in section 5.2 of 3GPP TS 34.121 (release 5), using the appropriate RMC with TPC (transmit power control) set to all "1s" or applying the required inner loop power control procedures to maintain maximum output power while HSUPA is active. Results for all applicable physical channel configurations (DPCCH, DPDCHn and spreading codes, HS-DPCCH etc) are tabulated in this test report. All configurations that are not supported by the DUT or cannot be measured due to technical or equipment limitations are identified.

7.3.2 Head SAR Measurements for Handsets

SAR for head exposure configurations is measured using the 12.2 kbps RMC with TPC bits configured to all "1s". SAR in AMR configurations is not required when the maximum average output of each RF channel for 12.2 kbps AMR is less than 0.25 dB higher than that measured in 12.2 kbps RMC. Otherwise, SAR is measured on the maximum output channel in 12.2 AMR with a 3.4 kbps SRB (signaling radio bearer) using the exposure configuration that resulted in the highest SAR for that RF channel in the 12.2 kbps RMC mode.

© 2014 PCTEST Engineering Laboratory, Inc.

7.3.3 Body SAR Measurements

SAR for body exposure configurations is measured using the 12.2 kbps RMC with the TPC bits all "1s".

7.3.4 SAR Measurements for Handsets with Rel 5 HSDPA

Body SAR for HSDPA is not required for handsets with HSDPA capabilities when the maximum average output power of each RF channel with HSDPA active is less than 0.25 dB higher than that measured without HSDPA using 12.2 kbps RMC and the maximum SAR for 12.2 kbps RMC is ≤ 75% of the SAR limit. Otherwise, SAR is measured for HSDPA, using an FRC with H-Set 1 in Sub-test 1 and a 12.2 kbps RMC configured in Test Loop Mode 1, using the highest body SAR configuration measured in 12.2 kbps RMC without HSDPA, on the maximum output channel with the body exposure configuration that resulted in the highest SAR in 12.2 kbps RMC mode for that RF channel.

The H-set used in FRC for HSDPA should be configured according to the UE category of a test device. The number of HS-DSCH/HSPDSCHs, HARQ processes, minimum inter-TTI interval, transport block sizes and RV coding sequence are defined by the applicable H-set. To maintain a consistent test configuration and stable transmission conditions, QPSK is used in the FRC for SAR testing. HS-DPCCH should be configured with a CQI feedback cycle of 2 ms to maintain a constant rate of active CQI slots. DPCCH and DPDCH gain factors of βc=9 and βd=15, and power offset parameters of ΔACK= ΔNACK =5 and ΔCQI=2 is used. The CQI value is determined by the UE category, transport block size, number of HS-PDSCHs and modulation used in the FRC.

Sub-Test	β_c	β_d	β_d *(SF)*	β_c/β_d	β_{HS} *(Note1, Note 2)*	CM (dB) *(Note 3)*	MPR (dB) *(Note 3)*
1	2/15	15/15	64	2/15	4/15	0.0	0.0
2	12/15 *(Note 4)*	15/15 *(Note 4)*	64	12/15 *(Note 4)*	24/15	1.0	0.0
3	15/15	8/15	64	15/8	30/15	1.5	0.5
4	15/15	4/15	64	15/4	30/15	1.5	0.5

Note 1: Δ_{ACK}, Δ_{NACK} and Δ_{CQI} = 8 ⇔ $A_{hs} = \beta_{hs}/\beta_c$ = 30/15 ⇔ β_{hs}= 30/15 *β_c.

Note 2: For the HS-DPCCH power mask requirement test in clause 5.2C, 5.7A, and the Error Vector Magnitude (EVM) with HS-DPCCH test in clause 5.13.1A, and HSDPA EVM with phase discontinuity in clause 5.13.1AA, Δ_{ACK} and Δ_{NACK} = 8 (A_{hs} = 30/15) with β_{hs} = 30/15 * β_c, and Δ_{CQI} = 7 (A_{hs} = 24/15) with β_{hs} = 24/15 * β_c.

Note 3: CM = 1 for β_c/β_d =12/15, β_{hs}/β_c=24/15. For all other combinations of DPDCH, DPCCH and HS-DPCCH the MPR is based on the relative CM difference. This is applicable for only UEs that support HSDPA in release 6 and later releases.

Figure 7-1
Table C.10.1.4 of TS 234.121-1

7.3.5 SAR Measurements for Handsets with Rel 6 HSUPA

Body SAR for HSUPA is not required when the maximum average output of each RF channel with HSUPA/HSDPA active is less than 0.25 dB higher than as measured without HSUPA/HSDPA using 12.2 kbps RMC and maximum SAR for 12.2 kbps RMC is ≤ 75 % of the SAR limit. Otherwise SAR is measured on the maximum output channel for the body exposure configuration produced highest SAR in 12.2 kbps RMC for that RF channel, using the additional procedures under "Release 6 HSPA data devices"

Head SAR for VOIP operations under HSPA is not required when maximum average output of each RF channel with HSPA is less than 0.25 dB higher than as measured using 12.2 kbps RMC. Otherwise SAR is measured using same HSPA configuration as used for body SAR.

© 2014 PCTEST Engineering Laboratory, Inc.

Sub-test	β_c	β_d	β_d (SF)	β_c/β_d	β_{hs} (1)	β_{ec}	β_{ed}	β_{ed} (SF)	β_{ed} (codes)	CM (2) (dB)	MPR (dB)	AG (4) Index	E-TFCI
1	11/15 (3)	15/15 (3)	64	11/15 (3)	22/15	209/225	1039/225	4	1	1.0	0.0	20	75
2	6/15	15/15	64	6/15	12/15	12/15	94/75	4	1	3.0	2.0	12	67
3	15/15	9/15	64	15/9	30/15	30/15	β_{ed1}: 47/15 β_{ed2}: 47/15	4	2	2.0	1.0	15	92
4	2/15	15/15	64	2/15	4/15	2/15	56/75	4	1	3.0	2.0	17	71
5	15/15 (4)	15/15 (4)	64	15/15 (4)	30/15	24/15	134/15	4	1	1.0	0.0	21	81

Note 1: Δ_{ACK}, Δ_{NACK} and $\Delta_{CQI} = 8 \Leftrightarrow A_{hs} = \beta_{hs}/\beta_c = 30/15 \Leftrightarrow \beta_{hs} = 30/15 * \beta_c$.
Note 2: CM = 1 for β_c/β_d =12/15, β_{hs}/β_c=24/15. For all other combinations of DPDCH, DPCCH, HS- DPCCH, E-DPDCH and E-DPCCH the MPR is based on the relative CM difference.
Note 3: For subtest 1 the β_c/β_d ratio of 11/15 for the TFC during the measurement period (TF1, TF0) is achieved by setting the signaled gain factors for the reference TFC (TF1, TF1) to β_c = 10/15 and β_d = 15/15.
Note 4: For subtest 5 the β_c/β_d ratio of 15/15 for the TFC during the measurement period (TF1, TF0) is achieved by setting the signaled gain factors for the reference TFC (TF1, TF1) to β_c = 14/15 and β_d = 15/15.
Note 5: Testing UE using E-DPDCH Physical Layer category 1 Sub-test 3 is not required according to TS 25.306 Table 5.1g.
Note 6: β_{ed} can not be set directly; it is set by Absolute Grant Value.

7.3.6 SAR Measurement Conditions for DC-HSDPA

SAR test exclusion for DC-HSDPA devices is determined by power measurements according to the H-Set 12, Fixed Reference Channel (FRC) configuration in Table C.8.1.12 of 3GPP TS 34.121-1. A primary and a secondary serving HS-DSCH Cell are required to perform the power measurement and for the results to qualify for SAR test exclusion. DC-HSDPA uplink maximum output power measurements using the four Rel. 5 HSDPA subtests in Table C.10.1.4 of TS 234.121-1 is required.

When the maximum average output power of each RF channel with DC-HSDPA active is ≤ ¼ dB higher than that measured using 12.2 kbps RMC, or the maximum reported SAR for 12.2 kbps RMC is ≤ 75% of the SAR limit, SAR evaluation for DC-HSDPA is not required.

7.4 SAR Testing with 802.11 Transmitters

Normal network operating configurations are not suitable for measuring the SAR of 802.11 a/b/g/n transmitters. Unpredictable fluctuations in network traffic and antenna diversity conditions can introduce undesirable variations in SAR results. The SAR for these devices should be measured using chipset based test mode software to ensure the results are consistent and reliable. See KDB Publication 248227 D01v01r02 for more details.

7.4.1 General Device Setup

Chipset based test mode software is hardware dependent and generally varies among manufacturers. The device operating parameters established in test mode for SAR measurements must be identical to those programmed in production units, including output power levels, amplifier gain settings and other RF performance tuning parameters. The test frequencies should correspond to actual channel frequencies defined for domestic use. SAR for devices with switched diversity should be measured with only one antenna transmitting at a time during each SAR measurement, according to a fixed modulation and data rate. The same data pattern should be used for all measurements.

7.4.2 Frequency Channel Configurations [24]

For 2.4 GHz, the highest average RF output power channel between the low, mid and high channel at the lowest data rate was selected for SAR evaluation in 802.11b mode. 802.11g/n modes and higher data rates for 802.11b were additionally evaluated for SAR if the output power of the respective mode was 0.25 dB or higher than the powers of the SAR configurations tested in the 802.11b mode.

For 5 GHz, the highest average RF output power channel across the default test channels at the lowest data rate was selected for SAR evaluation in 802.11a. When the adjacent channels are higher in power then the default channels, these “required channels” were considered instead of the default channels for SAR testing. 802.11n modes and higher data rates for 802.11a/n were evaluated only if the respective mode was higher than 0.25 dB or more than the 802.11a mode.

If the maximum extrapolated peak SAR of the zoom scan for the highest output channel was less than 1.6 W/kg and if the 1g averaged SAR was less than 0.8 W/kg, SAR testing was not required for the other test channels in the band.

© 2014 PCTEST Engineering Laboratory, Inc.

8 RF CONDUCTED POWERS

8.1 GSM Conducted Powers

		Maximum Burst-Averaged Output Power								
		Voice	*GPRS/EDGE Data (GMSK)*				*EDGE Data (8-PSK)*			
Band	**Channel**	**GSM [dBm] CS (1 Slot)**	**GPRS [dBm] 1 Tx Slot**	**GPRS [dBm] 2 Tx Slot**	**GPRS [dBm] 3 Tx Slot**	**GPRS [dBm] 4 Tx Slot**	**EDGE [dBm] 1 Tx Slot**	**EDGE [dBm] 2 Tx Slot**	**EDGE [dBm] 3 Tx Slot**	**EDGE [dBm] 4 Tx Slot**
GSM 850	128	33.42	33.41	30.76	**29.50**	27.77	27.02	26.87	24.68	24.42
	190	33.22	33.27	30.73	**29.41**	27.70	27.10	26.97	24.55	24.35
	251	33.30	33.31	30.66	**29.41**	27.66	27.05	26.95	24.32	24.29
GSM 1900	512	31.05	31.03	28.33	**26.20**	24.99	26.80	26.76	24.07	23.99
	661	30.84	30.88	28.32	**26.23**	25.00	26.93	26.70	24.13	23.96
	810	30.87	30.91	28.20	**26.14**	24.92	27.11	26.77	23.80	23.71
GSM 850	**Targets:**	33.0	33.0	30.5	**29.0**	27.5	27.0	26.5	24.5	24.0
GSM 1900		31.0	31.0	28.0	**26.0**	24.5	27.0	26.5	24.0	23.5
		Calculated Maximum Frame-Averaged Output Power								
		Voice	*GPRS/EDGE Data (GMSK)*				*EDGE Data (8-PSK)*			
Band	**Channel**	**GSM [dBm] CS (1 Slot)**	**GPRS [dBm] 1 Tx Slot**	**GPRS [dBm] 2 Tx Slot**	**GPRS [dBm] 3 Tx Slot**	**GPRS [dBm] 4 Tx Slot**	**EDGE [dBm] 1 Tx Slot**	**EDGE [dBm] 2 Tx Slot**	**EDGE [dBm] 3 Tx Slot**	**EDGE [dBm] 4 Tx Slot**
GSM 850	128	24.39	24.38	24.74	**25.24**	24.76	17.99	20.85	20.42	21.41
	190	24.19	24.24	24.71	**25.15**	24.69	18.07	20.95	20.29	21.34
	251	24.27	24.28	24.64	**25.15**	24.65	18.02	20.93	20.06	21.28
GSM 1900	512	22.02	22.00	22.31	**21.94**	21.98	17.77	20.74	19.81	20.98
	661	21.81	21.85	22.30	**21.97**	21.99	17.90	20.68	19.87	20.95
	810	21.84	21.88	22.18	**21.88**	21.91	18.08	20.75	19.54	20.70
GSM 850	**Frame Avg.Targets:**	23.97	23.97	24.48	**24.74**	24.49	17.97	20.48	20.24	20.99
GSM 1900		21.97	21.97	21.98	**21.74**	21.49	17.97	20.48	19.74	20.49

Notes:

1. Both burst-averaged and calculated frame-averaged powers are included. Frame-averaged power was calculated from the measured burst-averaged power by converting the slot powers into linear units and calculating the energy over 8 timeslots.
2. Per October 2013 TCB Workshop Notes, the source-based frame-averaged output power was evaluated for all GPRS/EDGE slot configurations. The configuration with the highest target frame averaged output power was evaluated for hotspot SAR. When the maximum frame-averaged powers are equivalent across two or more slots (within 0.25 dB), the configuration with the most number of time slots was tested.
3. GPRS/EDGE (GMSK) output powers were measured with coding scheme setting of 1 (CS1) on the base station simulator. CS1 was configured to measure GPRS output power measurements and SAR to ensure GMSK modulation in the signal. Our Investigation has shown that CS1 - CS4 settings do not have any impact on the output levels or modulation in the GPRS modes.
4. EDGE (8-PSK) output powers were measured with MCS7 on the base station simulator. MCS7 coding scheme was used to measure the output powers for EDGE since investigation has shown that choosing MCS7 coding scheme will ensure 8-PSK modulation. It has been shown that MCS levels that produce 8PSK modulation do not have an impact on output power.

GSM Class: B
GPRS Multislot class: 33 (Max 4 Tx uplink slots)
EDGE Multislot class: 33 (Max 4 Tx uplink slots)
DTM Multislot Class: N/A

© 2014 PCTEST Engineering Laboratory, Inc.

Figure 8-1
Power Measurement Setup

8.2 UMTS Conducted Powers

3GPP Release Version	Mode	3GPP 34.121 Subtest	Cellular Band [dBm]			PCS Band [dBm]			3GPP MPR [dB]
			4132	4183	4233	9262	9400	9538	
99	WCDMA	12.2 kbps RMC	22.64	22.59	22.51	22.86	22.96	22.94	-
99		12.2 kbps AMR	22.56	22.52	22.52	22.98	22.97	22.97	-
6	HSDPA	Subtest 1	21.47	21.42	21.34	21.62	21.75	21.81	0
6		Subtest 2	21.54	21.59	21.58	22.00	22.23	21.97	0
6		Subtest 3	21.25	21.19	21.13	21.34	21.54	21.66	0.5
6		Subtest 4	21.23	21.07	21.07	21.37	21.47	21.70	0.5
6	HSUPA	Subtest 1	21.31	21.61	21.58	21.60	21.90	21.51	0
6		Subtest 2	20.53	20.65	20.66	20.31	20.95	20.92	2
6		Subtest 3	20.00	19.95	19.97	20.75	21.13	20.76	1
6		Subtest 4	20.95	20.55	20.58	21.34	21.65	21.34	2
6		Subtest 5	21.51	21.57	21.47	21.73	21.78	21.74	0
8	DC-HSDPA	Subtest 1	21.56	21.39	21.54	21.87	21.95	21.91	0
8		Subtest 2	21.58	21.30	21.45	21.75	21.96	21.93	0
8		Subtest 3	21.01	20.97	20.99	21.48	21.57	21.47	0.5
8		Subtest 4	21.03	20.83	20.94	21.44	21.65	21.45	0.5

UMTS SAR was tested under RMC 12.2 kbps with HSPA Inactive per KDB Publication 941225 D01v02. HSPA SAR was not required since the average output power of the HSPA subtests was not more than 0.25 dB higher than the RMC level and SAR was less than 1.2 W/kg.

DC-HSDPA considerations

- 3GPP Specification 34.121-1 Release 8 Ver 8.10.0 was used for DC-HSDPA guidance
- H-Set 12 (QPSK) was confirmed to be used during DC-HSDPA measurements
- Measured maximum output powers for DC-HSDPA were not greater than 1/4 dB higher than the WCDMA 12.2 kbps RMC maximum output, as a result, SAR is not required for DC-HSDPA
- The DUT supports UE category 24 for HSDPA

It is expected by the manufacturer that MPR for some HSUPA subtests may be up to 1 dB more than specified by 3GPP, but also as low as 0 dB according to the chipset implementation in this model.

Figure 8-2
Power Measurement Setup

© 2014 PCTEST Engineering Laboratory, Inc.

8.3 WLAN Conducted Powers

Table 8-1
IEEE 802.11b Average RF Power

Mode	Freq	Channel	802.11b (2.4 GHz) Conducted Power [dBm]			
			Data Rate [Mbps]			
	[MHz]		1	2	5.5	11
802.11b	2412	1*	**17.12**	17.17	17.19	17.17
802.11b	2437	6*	16.75	16.77	16.77	16.76
802.11b	2462	11*	16.72	16.81	16.80	16.80

Table 8-2
IEEE 802.11g Average RF Power

Mode	Freq	Channel	802.11g (2.4 GHz) Conducted Power [dBm]							
			Data Rate [Mbps]							
	[MHz]		6	9	12	18	24	36	48	54
802.11g	2412	1	13.14	13.11	13.08	13.12	13.08	13.05	13.07	13.04
802.11g	2437	6	12.70	12.74	12.66	12.62	12.66	12.54	12.65	12.58
802.11g	2462	11	12.95	12.54	12.55	12.62	12.54	12.50	12.50	12.50

Table 8-3
IEEE 802.11n Average RF Power

Mode	Freq	Channel	802.11n (2.4 GHz) Conducted Power [dBm]							
			Data Rate [Mbps]							
	[MHz]		6.5	13	20	26	39	52	58	65
802.11n	2412	1	8.80	8.77	8.80	8.72	8.69	8.72	8.75	8.73
802.11n	2437	6	9.36	9.28	9.29	9.35	9.30	9.34	9.34	9.26
802.11n	2462	11	8.82	8.79	8.75	8.70	8.67	8.74	8.76	8.76

Table 8-4
IEEE 802.11a Average RF Power

Mode	Freq	Channel	802.11a (5GHz) Conducted Power [dBm]							
			Data Rate [Mbps]							
	[MHz]		6	9	12	18	24	36	48	54
802.11a	5180	36*	10.35	10.34	10.35	10.36	10.30	10.31	10.28	10.30
802.11a	5200	40	**10.37**	10.40	10.33	10.39	10.32	10.24	10.29	10.37
802.11a	5220	44	10.28	10.18	10.28	10.31	10.22	10.21	10.22	10.21
802.11a	5240	48*	9.62	9.67	9.60	9.67	9.58	9.57	9.55	9.50
802.11a	5260	52*	**10.25**	10.22	10.28	10.21	10.20	10.23	10.24	10.20
802.11a	5280	56	10.22	10.16	10.18	10.19	10.23	10.21	10.21	10.17
802.11a	5300	60	9.82	9.81	9.81	9.85	9.82	9.87	9.89	9.85
802.11a	5320	64*	9.79	9.80	9.79	9.77	9.71	9.70	9.75	9.68
802.11a	5500	100	9.80	9.80	9.80	9.79	9.77	9.77	9.78	9.76
802.11a	5520	104*	10.32	10.31	10.40	10.34	10.31	10.25	10.28	10.30
802.11a	5540	108	**10.37**	10.38	10.43	10.43	10.28	10.33	10.38	10.34
802.11a	5560	112	9.93	9.97	9.95	9.86	9.91	9.94	9.92	9.84
802.11a	5580	116*	9.50	9.55	9.45	9.46	9.52	9.44	9.50	9.49
802.11a	5600	120	N/A	N/A	N/A	N/A	N/A	N/A	N/A	N/A
802.11a	5620	124	N/A	N/A	N/A	N/A	N/A	N/A	N/A	N/A
802.11a	5640	128	N/A	N/A	N/A	N/A	N/A	N/A	N/A	N/A
802.11a	5660	132	10.08	10.11	10.01	10.12	10.06	10.02	10.02	10.09
802.11a	5680	136*	10.10	10.15	10.13	10.03	10.05	10.09	10.07	10.10
802.11a	5700	140	9.66	9.70	9.70	9.72	9.58	9.65	9.66	9.62
802.11a	5745	149*	10.11	10.05	10.05	10.05	10.02	10.07	10.00	9.99
802.11a	5765	153	**10.15**	10.06	10.06	10.16	10.09	10.17	9.98	9.99
802.11a	5785	157*	9.50	9.39	9.44	9.42	9.39	9.45	9.43	9.39
802.11a	5805	161	8.91	8.77	8.81	8.83	8.80	8.79	8.87	8.81
802.11a	5825	165*	9.59	9.62	9.54	9.50	9.44	9.50	9.55	9.39

Per FCC KDB Publication 443999 and RSS-210 A9.2(3), transmission on channels which overlap the 5600-5650 MHz is prohibited as a client. This device does not transmit any beacons or initiate any transmissions in 5.3 and 5.5 GHz Band.

(*) – indicates default channels per KDB Publication 248227 D01v01r02. When the adjacent channels are higher in power then the default channels, these “required channels” are considered for SAR testing instead of the default channels.

© 2014 PCTEST Engineering Laboratory, Inc.

Table 8-5
IEEE 802.11n Average RF Power – 20 MHz Bandwidth

Mode	Freq	Channel	20MHz BW 802.11n (5GHz) Conducted Power [dBm]							
			Data Rate [Mbps]							
	[MHz]		6.5	13	19.5	26	39	52	58.5	65
802.11n	5180	36	9.50	9.51	9.50	9.40	9.44	9.32	9.36	9.36
802.11n	5200	40	9.51	9.47	9.49	9.43	9.48	9.29	9.43	9.39
802.11n	5220	44	10.36	10.35	10.37	10.22	10.27	10.22	10.28	10.15
802.11n	5240	48	9.75	9.79	9.77	9.65	9.65	9.57	9.57	9.67
802.11n	5260	52	10.38	10.35	10.37	10.30	10.28	10.31	10.29	10.34
802.11n	5280	56	10.37	10.38	10.37	10.29	10.24	10.28	10.30	10.37
802.11n	5300	60	9.86	9.83	9.85	9.78	9.82	9.74	9.71	9.75
802.11n	5320	64	9.90	9.84	9.88	9.87	9.83	9.89	9.85	9.89
802.11n	5500	100	9.85	9.92	9.83	9.85	9.87	9.82	9.80	9.83
802.11n	5520	104	9.51	9.59	9.47	9.56	9.50	9.46	9.48	9.48
802.11n	5540	108	10.47	10.49	10.47	10.43	10.48	10.46	10.42	10.48
802.11n	5560	112	10.09	10.18	10.12	10.13	10.09	10.10	10.01	10.13
802.11n	5580	116	9.55	9.65	9.48	9.50	9.48	9.49	9.60	9.59
802.11n	5600	120	N/A	N/A	N/A	N/A	N/A	N/A	N/A	N/A
802.11n	5620	124	N/A	N/A	N/A	N/A	N/A	N/A	N/A	N/A
802.11n	5640	128	N/A	N/A	N/A	N/A	N/A	N/A	N/A	N/A
802.11n	5660	132	10.11	10.13	10.06	10.06	10.04	10.09	10.00	10.04
802.11n	5680	136	10.12	10.25	10.14	10.17	10.09	10.06	10.11	10.16
802.11n	5700	140	9.74	9.87	9.79	9.69	9.85	9.69	9.67	9.70
802.11n	5745	149	10.05	10.02	10.10	10.07	10.06	10.30	10.32	10.00
802.11n	5765	153	10.12	10.12	10.14	10.18	10.12	10.35	10.36	10.04
802.11n	5785	157	9.50	9.44	9.51	9.48	9.57	9.69	9.77	9.47
802.11n	5805	161	10.22	10.16	10.25	10.27	10.19	10.35	10.36	10.23
802.11n	5825	165	9.56	9.51	9.61	9.62	9.62	9.73	9.83	9.48

Table 8-6
IEEE 802.11n Average RF Power – 40 MHz Bandwidth

Mode	Freq [MHz]	Channel	40MHz BW 802.11n (5GHz) Conducted Power [dBm]							
			Data Rate [Mbps]							
			13.5	27	40.5	54	81	108	121.5	135
802.11n	5190	38	7.50	7.58	7.54	7.56	7.52	7.50	7.51	7.52
802.11n	5230	46	7.50	7.61	7.55	7.62	7.58	7.53	7.58	7.53
802.11n	5270	54	7.56	7.61	7.58	7.50	7.44	7.44	7.47	7.44
802.11n	5310	62	7.98	8.03	8.06	7.95	7.87	7.82	7.95	7.86
802.11n	5510	102	8.30	8.25	8.30	8.33	8.28	8.27	8.25	8.26
802.11n	5550	110	8.37	8.34	8.31	8.36	8.37	8.41	8.33	8.30
802.11n	5590	118	N/A	N/A	N/A	N/A	N/A	N/A	N/A	N/A
802.11n	5630	126	N/A	N/A	N/A	N/A	N/A	N/A	N/A	N/A
802.11n	5670	134	7.54	7.53	7.47	7.54	7.54	7.45	7.55	7.56
802.11n	5755	151	7.50	7.56	7.41	7.40	7.45	7.40	7.43	7.48
802.11n	5795	159	7.62	7.68	7.62	7.53	7.51	7.53	7.50	7.58

Justification for reduced test configurations for WIFI channels per KDB Publication 248227 D01v01r02 and October 2012/April 2013 FCC/TCB Meeting Notes:

- For 2.4 GHz, highest average RF output power channel for the lowest data rate for IEEE 802.11b were selected for SAR evaluation. Other IEEE 802.11 modes (including 802.11g/n) were not investigated since the average output powers over all channels and data rates were not more than 0.25 dB higher than the tested channel in the lowest data rate of IEEE 802.11b mode.
- For 5 GHz, highest average RF output power channel for the lowest data rate for IEEE 802.11a were selected for SAR evaluation. Other IEEE 802.11 modes (including 802.11n) were not investigated since the average output powers over all channels and data rates were not more than 0.25 dB higher than the tested channel in the lowest data rate of IEEE 802.11a mode.
- When the maximum extrapolated peak SAR of the zoom scan for the maximum output channel is <1.6 W/kg and the reported 1g averaged SAR is <0.8 W/kg, SAR testing on other channels is not required. Otherwise, the other default (or corresponding required) test channels were additionally tested using the lowest data rate.
- The bolded data rate and channel above were tested for SAR.

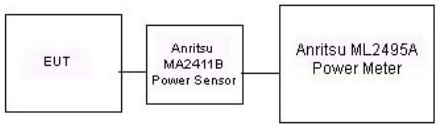

Figure 8-3
Power Measurement Setup

© 2014 PCTEST Engineering Laboratory, Inc.

9 SYSTEM VERIFICATION

9.1 Tissue Verification

Table 9-1
Measured Tissue Properties

Calibrated for Tests Performed on:	Tissue Type	Tissue Temp During Calibration (C˚)	Measured Frequency (MHz)	Measured Conductivity, σ (S/m)	Measured Dielectric Constant, ε	TARGET Conductivity, σ (S/m)	TARGET Dielectric Constant, ε	% dev σ	% dev ε
06/17/2014	835H	22.7	820	0.879	40.190	0.899	41.578	-2.22%	-3.34%
			835	0.893	40.006	0.900	41.500	-0.78%	-3.60%
			850	0.908	39.847	0.916	41.500	-0.87%	-3.98%
06/23/2014	1900H	22.0	1850	1.392	40.311	1.400	40.000	-0.57%	0.78%
			1880	1.421	40.159	1.400	40.000	1.50%	0.40%
			1910	1.453	40.016	1.400	40.000	3.79%	0.04%
06/19/2014	2450H	23.6	2401	1.731	39.935	1.756	39.287	-1.42%	1.65%
			2450	1.788	39.777	1.800	39.200	-0.67%	1.47%
			2499	1.844	39.617	1.853	39.138	-0.49%	1.22%
06/19/2014	5200H - 5800H	24.4	5200	4.605	37.601	4.655	35.986	-1.07%	4.49%
			5260	4.695	37.519	4.717	35.917	-0.47%	4.46%
			5300	4.709	37.469	4.758	35.871	-1.03%	4.45%
			5500	4.923	37.189	4.963	35.643	-0.81%	4.34%
			5540	4.964	37.206	5.004	35.597	-0.80%	4.52%
			5765	5.203	36.917	5.234	35.340	-0.59%	4.46%
			5800	5.219	36.822	5.270	35.300	-0.97%	4.31%
06/23/2014	835B	22.1	820	0.929	55.350	0.969	55.258	-4.13%	0.17%
			835	0.942	55.193	0.970	55.200	-2.89%	-0.01%
			850	0.956	55.074	0.988	55.154	-3.24%	-0.15%
06/19/2014	1900B	21.3	1850	1.449	53.626	1.520	53.300	-4.67%	0.61%
			1880	1.481	53.465	1.520	53.300	-2.57%	0.31%
			1910	1.514	53.360	1.520	53.300	-0.39%	0.11%
06/17/2014	2450B	22.4	2401	1.956	51.261	1.903	52.765	2.79%	-2.85%
			2450	2.024	51.126	1.950	52.700	3.79%	-2.99%
			2499	2.084	50.907	2.019	52.638	3.22%	-3.29%
06/23/2014	5200B - 5800B	23.0	5200	5.500	47.385	5.299	49.014	3.79%	-3.32%
			5260	5.557	47.241	5.369	48.933	3.50%	-3.46%
			5300	5.620	47.117	5.416	48.879	3.77%	-3.60%
			5500	5.873	46.816	5.650	48.607	3.95%	-3.68%
			5540	5.938	46.757	5.696	48.553	4.25%	-3.70%
			5765	6.234	46.367	5.959	48.248	4.61%	-3.90%
			5800	6.287	46.323	6.000	48.200	4.78%	-3.89%

The above measured tissue parameters were used in the DASY software. The DASY software was used to perform interpolation to determine the dielectric parameters at the SAR test device frequencies (per KDB 865664 and IEEE 1528-2013 6.6.1.2). The tissue parameters listed in the SAR test plots may slightly differ from the table above due to significant digit rounding in the software.

© 2014 PCTEST Engineering Laboratory, Inc.

9.2 Test System Verification

Prior to SAR assessment, the system is verified to ±10% of the SAR measurement on the reference dipole at the time of calibration by the calibration facility. Full system validation status and result summary can be found in Appendix E.

Table 9-2
System Verification Results

System Verification TARGET & MEASURED												
SAR System #	Tissue Frequency (MHz)	Tissue Type	Date:	Amb. Temp (°C)	Liquid Temp (°C)	Input Power (W)	Dipole SN	Probe SN	Measured SAR_{1g} (W/kg)	1 W Target SAR_{1g} (W/kg)	1 W Normalized SAR_{1g} (W/kg)	$Deviation_{1g}$ (%)
I	835	HEAD	06/17/2014	23.8	23.5	0.100	4d119	3209	1.000	9.220	10.000	8.46%
C	1900	HEAD	06/23/2014	20.9	22.0	0.100	5d148	3213	3.780	40.700	37.800	-7.13%
H	2450	HEAD	06/19/2014	24.3	23.7	0.100	719	3319	5.220	53.200	52.200	-1.88%
E	5200	HEAD	06/19/2014	24.5	24.4	0.100	1057	3914	7.510	78.000	75.100	-3.72%
E	5300	HEAD	06/19/2014	24.4	24.4	0.100	1057	3914	7.900	83.000	79.000	-4.82%
E	5500	HEAD	06/19/2014	24.5	24.2	0.100	1057	3914	7.980	84.300	79.800	-5.34%
E	5800	HEAD	06/19/2014	24.5	24.3	0.100	1057	3914	7.470	79.300	74.700	-5.80%
B	835	BODY	06/23/2014	22.6	22.1	0.100	4d133	3288	0.977	9.610	9.770	1.66%
B	1900	BODY	06/19/2014	23.2	21.3	0.100	5d148	3288	4.070	39.300	40.700	3.56%
G	2450	BODY	06/17/2014	23.6	22.9	0.100	797	3258	5.260	49.400	52.600	6.48%
A	5200	BODY	06/23/2014	22.5	23.0	0.100	1007	3920	7.350	72.600	73.500	1.24%
A	5300	BODY	06/23/2014	22.5	23.0	0.100	1007	3920	7.220	74.700	72.200	-3.35%
A	5500	BODY	06/23/2014	22.6	22.8	0.100	1007	3920	7.530	75.900	75.300	-0.79%
A	5800	BODY	06/23/2014	22.6	22.8	0.100	1007	3920	7.060	72.900	70.600	-3.16%

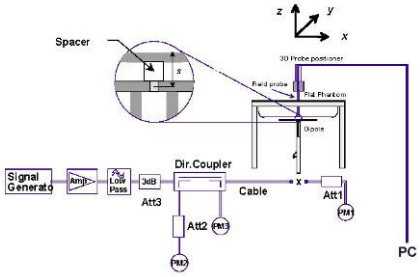

Figure 9-1
System Verification Setup Diagram

Figure 9-2
System Verification Setup Photo

© 2014 PCTEST Engineering Laboratory, Inc.

10 SAR DATA SUMMARY

10.1 Standalone Head SAR Data

Table 10-1
GSM 850 Head SAR

MEASUREMENT RESULTS														
FREQUENCY		Mode/Band	Service	Maximum Allowed Power [dBm]	Conducted Power [dBm]	Power Drift [dB]	Side	Test Position	Device Serial Number	Duty Cycle	SAR (1g)	Scaling Factor	Scaled SAR (1g)	Plot #
MHz	Ch.										(W/kg)		(W/kg)	
836.60	190	GSM 850	GSM	33.5	33.22	-0.01	Right	Cheek	FL-243-B	1:8.3	0.208	1.067	0.222	
836.60	190	GSM 850	GSM	33.5	33.22	0.03	Right	Tilt	FL-243-B	1:8.3	0.144	1.067	0.154	
836.60	190	GSM 850	GSM	33.5	33.22	0.07	Left	Cheek	FL-243-B	1:8.3	0.285	1.067	0.304	A1
836.60	190	GSM 850	GSM	33.5	33.22	0.00	Left	Tilt	FL-243-B	1:8.3	0.183	1.067	0.195	
ANSI / IEEE C95.1 1992 - SAFETY LIMIT Spatial Peak Uncontrolled Exposure/General Population							Head 1.6 W/kg (mW/g) averaged over 1 gram							

Table 10-2
GSM 1900 Head SAR

MEASUREMENT RESULTS														
FREQUENCY		Mode/Band	Service	Maximum Allowed Power [dBm]	Conducted Power [dBm]	Power Drift [dB]	Side	Test Position	Device Serial Number	Duty Cycle	SAR (1g)	Scaling Factor	Scaled SAR (1g)	Plot #
MHz	Ch.										(W/kg)		(W/kg)	
1880.00	661	GSM 1900	GSM	31.5	30.84	-0.14	Right	Cheek	FL-243-B	1:8.3	0.342	1.164	0.398	
1880.00	661	GSM 1900	GSM	31.5	30.84	0.06	Right	Tilt	FL-243-B	1:8.3	0.223	1.164	0.260	
1880.00	661	GSM 1900	GSM	31.5	30.84	-0.14	Left	Cheek	FL-243-B	1:8.3	0.623	1.164	0.725	A2
1880.00	661	GSM 1900	GSM	31.5	30.84	-0.05	Left	Tilt	FL-243-B	1:8.3	0.147	1.164	0.171	
ANSI / IEEE C95.1 1992 - SAFETY LIMIT Spatial Peak Uncontrolled Exposure/General Population							Head 1.6 W/kg (mW/g) averaged over 1 gram							

Table 10-3
UMTS 850 Head SAR

MEASUREMENT RESULTS														
FREQUENCY		Mode/Band	Service	Maximum Allowed Power [dBm]	Conducted Power [dBm]	Power Drift [dB]	Side	Test Position	Device Serial Number	Duty Cycle	SAR (1g)	Scaling Factor	Scaled SAR (1g)	Plot #
MHz	Ch.										(W/kg)		(W/kg)	
836.60	4183	UMTS 850	RMC	23.0	22.59	0.07	Right	Cheek	FL-243-B	1:1	0.164	1.099	0.180	
836.60	4183	UMTS 850	RMC	23.0	22.59	0.08	Right	Tilt	FL-243-B	1:1	0.128	1.099	0.141	
836.60	4183	UMTS 850	RMC	23.0	22.59	0.06	Left	Cheek	FL-243-B	1:1	0.218	1.099	0.240	A3
836.60	4183	UMTS 850	RMC	23.0	22.59	0.04	Left	Tilt	FL-243-B	1:1	0.143	1.099	0.157	
ANSI / IEEE C95.1 1992 - SAFETY LIMIT Spatial Peak Uncontrolled Exposure/General Population							Head 1.6 W/kg (mW/g) averaged over 1 gram							

Table 10-4
UMTS 1900 Head SAR

MEASUREMENT RESULTS														
FREQUENCY		Mode/Band	Service	Maximum Allowed Power [dBm]	Conducted Power [dBm]	Power Drift [dB]	Side	Test Position	Device Serial Number	Duty Cycle	SAR (1g)	Scaling Factor	Scaled SAR (1g)	Plot #
MHz	Ch.										(W/kg)		(W/kg)	
1880.00	9400	UMTS 1900	RMC	23.0	22.96	0.11	Right	Cheek	FL-243-B	1:1	0.499	1.009	0.503	
1880.00	9400	UMTS 1900	RMC	23.0	22.96	0.03	Right	Tilt	FL-243-B	1:1	0.301	1.009	0.304	
1852.40	9262	UMTS 1900	RMC	23.0	22.86	-0.15	Left	Cheek	FL-243-B	1:1	0.815	1.033	0.842	
1880.00	9400	UMTS 1900	RMC	23.0	22.96	-0.12	Left	Cheek	FL-243-B	1:1	0.882	1.009	**0.890**	A4
1907.60	9538	UMTS 1900	RMC	23.0	22.94	-0.14	Left	Cheek	FL-243-B	1:1	0.779	1.014	0.790	
1880.00	9400	UMTS 1900	RMC	23.0	22.96	-0.03	Left	Tilt	FL-243-B	1:1	0.198	1.009	0.200	
1880.00	9400	UMTS 1900	RMC	23.0	22.96	-0.13	Left	Cheek	FL-243-B	1:1	0.824	1.009	0.831	
ANSI / IEEE C95.1 1992 - SAFETY LIMIT Spatial Peak Uncontrolled Exposure/General Population							Head 1.6 W/kg (mW/g) averaged over 1 gram							

Note: Blue entry represents variability data.

© 2014 PCTEST Engineering Laboratory, Inc.

Table 10-5
DTS Head SAR

MEASUREMENT RESULTS																
FREQUENCY		Mode	Service	Maximum Allowed Power [dBm]	Conducted Power [dBm]	Power Drift [dB]	Side	Test Position	Device Serial Number	Data Rate (Mbps)	Duty Cycle	SAR (1g)	Scaling Factor	Scaled SAR (1g)	Plot #
MHz	Ch.											(W/kg)		(W/kg)	
2412	1	IEEE 802.11b	DSSS	17.5	17.12	-0.06	Right	Cheek	FL-243-E	1	1:1	0.509	1.091	**0.555**	A5
2412	1	IEEE 802.11b	DSSS	17.5	17.12	-0.02	Right	Tilt	FL-243-E	1	1:1	0.119	1.091	0.130	
2412	1	IEEE 802.11b	DSSS	17.5	17.12	0.12	Left	Cheek	FL-243-E	1	1:1	0.160	1.091	0.175	
2412	1	IEEE 802.11b	DSSS	17.5	17.12	0.15	Left	Tilt	FL-243-E	1	1:1	0.087	1.091	0.095	
5765	153	IEEE 802.11a	OFDM	10.5	10.15	0.14	Right	Cheek	FL-243-C	6	1:1	0.102	1.084	0.111	A6
5765	153	IEEE 802.11a	OFDM	10.5	10.15	0.09	Right	Tilt	FL-243-C	6	1:1	0.051	1.084	0.055	
5765	153	IEEE 802.11a	OFDM	10.5	10.15	-0.19	Left	Cheek	FL-243-C	6	1:1	0.022	1.084	0.024	
5765	153	IEEE 802.11a	OFDM	10.5	10.15	-0.17	Left	Tilt	FL-243-C	6	1:1	0.024	1.084	0.026	
ANSI / IEEE C95.1 1992 - SAFETY LIMIT Spatial Peak Uncontrolled Exposure/General Population							Head 1.6 W/kg (mW/g) averaged over 1 gram								

Table 10-6
NII Head SAR

MEASUREMENT RESULTS															
FREQUENCY		Mode	Service	Maximum Allowed Power [dBm]	Conducted Power [dBm]	Power Drift [dB]	Side	Test Position	Device Serial Number	Data Rate (Mbps)	Duty Cycle	SAR (1g)	Scaling Factor	Scaled SAR (1g)	Plot #
MHz	Ch.											(W/kg)		(W/kg)	
5200	40	IEEE 802.11a	OFDM	10.5	10.37	0.12	Right	Cheek	FL-243-C	6	1:1	0.020	1.030	0.021	
5200	40	IEEE 802.11a	OFDM	10.5	10.37	-0.18	Right	Tilt	FL-243-C	6	1:1	0.009	1.030	0.009	
5200	40	IEEE 802.11a	OFDM	10.5	10.37	0.19	Left	Cheek	FL-243-C	6	1:1	0.010	1.030	0.010	
5200	40	IEEE 802.11a	OFDM	10.5	10.37	0.15	Left	Tilt	FL-243-C	6	1:1	0.003	1.030	0.003	
5260	52	IEEE 802.11a	OFDM	10.5	10.25	-0.12	Right	Cheek	FL-243-C	6	1:1	0.057	1.059	**0.060**	A7
5260	52	IEEE 802.11a	OFDM	10.5	10.25	-0.14	Right	Tilt	FL-243-C	6	1:1	0.019	1.059	0.020	
5260	52	IEEE 802.11a	OFDM	10.5	10.25	-0.11	Left	Cheek	FL-243-C	6	1:1	0.017	1.059	0.018	
5260	52	IEEE 802.11a	OFDM	10.5	10.25	-0.16	Left	Tilt	FL-243-C	6	1:1	0.009	1.059	0.010	
5540	108	IEEE 802.11a	OFDM	10.5	10.37	0.13	Right	Cheek	FL-243-C	6	1:1	0.037	1.030	0.038	
5540	108	IEEE 802.11a	OFDM	10.5	10.37	-0.14	Right	Tilt	FL-243-C	6	1:1	0.018	1.030	0.019	
5540	108	IEEE 802.11a	OFDM	10.5	10.37	-0.18	Left	Cheek	FL-243-C	6	1:1	0.014	1.030	0.014	
5540	108	IEEE 802.11a	OFDM	10.5	10.37	-0.14	Left	Tilt	FL-243-C	6	1:1	0.009	1.030	0.009	
ANSI / IEEE C95.1 1992 - SAFETY LIMIT Spatial Peak Uncontrolled Exposure/General Population							Head 1.6 W/kg (mW/g) averaged over 1 gram								

10.2 Standalone Body-Worn SAR Data

Table 10-7
GSM/UMTS Body-Worn SAR Data

MEASUREMENT RESULTS															
FREQUENCY		Mode	Service	Maximum Allowed Power [dBm]	Conducted Power [dBm]	Power Drift [dB]	Spacing	Device Serial Number	# of Time Slots	Duty Cycle	Side	SAR (1g)	Scaling Factor	Scaled SAR (1g)	Plot #
MHz	Ch.											(W/kg)		(W/kg)	
836.60	190	GSM 850	GSM	33.5	33.22	0.03	10 mm	FL-243-B	1	1:8.3	back	0.395	1.067	0.421	A8
1880.00	661	GSM 1900	GSM	31.5	30.84	0.05	10 mm	FL-243-A	1	1:8.3	back	0.418	1.164	0.487	A10
836.60	4183	UMTS 850	RMC	23.0	22.59	0.01	10 mm	FL-243-B	N/A	1:1	back	0.313	1.099	0.344	A12
1880.00	9400	UMTS 1900	RMC	23.0	22.96	0.00	10 mm	FL-243-A	N/A	1:1	back	0.594	1.009	**0.599**	A13
ANSI / IEEE C95.1 1992 - SAFETY LIMIT Spatial Peak Uncontrolled Exposure/General Population							Body 1.6 W/kg (mW/g) averaged over 1 gram								

Table 10-8
DTS Body-Worn SAR

MEASUREMENT RESULTS															
FREQUENCY		Mode	Service	Maximum Allowed Power [dBm]	Conducted Power [dBm]	Power Drift [dB]	Spacing	Device Serial Number	Data Rate (Mbps)	Side	Duty Cycle	SAR (1g)	Scaling Factor	Scaled SAR (1g)	Plot #
MHz	Ch.											(W/kg)		(W/kg)	
2412	1	IEEE 802.11b	DSSS	17.5	17.12	0.03	10 mm	FL-243-B	1	back	1:1	0.156	1.091	**0.170**	A15
5765	153	IEEE 802.11a	OFDM	10.5	10.15	0.13	10 mm	FL-243-B	6	back	1:1	0.120	1.084	0.130	A16
ANSI / IEEE C95.1 1992 - SAFETY LIMIT Spatial Peak Uncontrolled Exposure/General Population							Body 1.6 W/kg (mW/g) averaged over 1 gram								

© 2014 PCTEST Engineering Laboratory, Inc.

Table 10-9
NII Body-Worn SAR

MEASUREMENT RESULTS															
FREQUENCY		Mode	Service	Maximum Allowed Power [dBm]	Conducted Power [dBm]	Power Drift [dB]	Spacing	Device Serial Number	Data Rate (Mbps)	Side	Duty Cycle	SAR (1g)	Scaling Factor	Scaled SAR (1g)	Plot #
MHz	Ch.											(W/kg)		(W/kg)	
5200	40	IEEE 802.11a	OFDM	10.5	10.37	0.14	10 mm	FL-243-B	6	back	1:1	0.056	1.030	0.058	
5260	52	IEEE 802.11a	OFDM	10.5	10.25	0.14	10 mm	FL-243-B	6	back	1:1	0.098	1.059	**0.104**	A17
5540	108	IEEE 802.11a	OFDM	10.5	10.37	0.15	10 mm	FL-243-B	6	back	1:1	0.094	1.030	0.097	
ANSI / IEEE C95.1 1992 - SAFETY LIMIT Spatial Peak Uncontrolled Exposure/General Population							Body 1.6 W/kg (mW/g) averaged over 1 gram								

10.3 Standalone Wireless Router SAR Data

Table 10-10
GPRS/UMTS Hotspot SAR Data

MEASUREMENT RESULTS															
FREQUENCY		Mode	Service	Maximum Allowed Power [dBm]	Conducted Power [dBm]	Power Drift [dB]	Spacing	Device Serial Number	# of GPRS Slots	Duty Cycle	Side	SAR (1g)	Scaling Factor	Scaled SAR (1g)	Plot #
MHz	Ch.											(W/kg)		(W/kg)	
836.60	190	GSM 850	GPRS	29.5	29.41	0.00	10 mm	FL-243-B	3	1:2.76	back	0.438	1.021	0.447	A9
836.60	190	GSM 850	GPRS	29.5	29.41	0.08	10 mm	FL-243-B	3	1:2.76	front	0.331	1.021	0.338	
836.60	190	GSM 850	GPRS	29.5	29.41	0.17	10 mm	FL-243-B	3	1:2.76	bottom	0.048	1.021	0.049	
836.60	190	GSM 850	GPRS	29.5	29.41	-0.11	10 mm	FL-243-B	3	1:2.76	right	0.205	1.021	0.209	
836.60	190	GSM 850	GPRS	29.5	29.41	-0.04	10 mm	FL-243-B	3	1:2.76	left	0.375	1.021	0.383	
1880.00	661	GSM 1900	GPRS	26.5	26.23	0.11	10 mm	FL-243-A	3	1:2.76	back	0.395	1.064	0.420	
1880.00	661	GSM 1900	GPRS	26.5	26.23	0.03	10 mm	FL-243-A	3	1:2.76	front	0.568	1.064	0.604	A11
1880.00	661	GSM 1900	GPRS	26.5	26.23	0.04	10 mm	FL-243-A	3	1:2.76	bottom	0.399	1.064	0.425	
1880.00	661	GSM 1900	GPRS	26.5	26.23	0.12	10 mm	FL-243-A	3	1:2.76	right	0.062	1.064	0.066	
1880.00	661	GSM 1900	GPRS	26.5	26.23	-0.01	10 mm	FL-243-A	3	1:2.76	left	0.240	1.064	0.255	
836.60	4183	UMTS 850	RMC	23.0	22.59	0.01	10 mm	FL-243-B	N/A	1:1	back	0.313	1.099	0.344	A12
836.60	4183	UMTS 850	RMC	23.0	22.59	0.10	10 mm	FL-243-B	N/A	1:1	front	0.255	1.099	0.280	
836.60	4183	UMTS 850	RMC	23.0	22.59	0.10	10 mm	FL-243-B	N/A	1:1	bottom	0.040	1.099	0.044	
836.60	4183	UMTS 850	RMC	23.0	22.59	0.03	10 mm	FL-243-B	N/A	1:1	right	0.157	1.099	0.173	
836.60	4183	UMTS 850	RMC	23.0	22.59	-0.05	10 mm	FL-243-B	N/A	1:1	left	0.294	1.099	0.323	
1880.00	9400	UMTS 1900	RMC	23.0	22.96	0.00	10 mm	FL-243-A	N/A	1:1	back	0.594	1.009	0.599	
1852.40	9262	UMTS 1900	RMC	23.0	22.86	0.06	10 mm	FL-243-A	N/A	1:1	front	0.826	1.033	0.853	
1880.00	9400	UMTS 1900	RMC	23.0	22.96	0.00	10 mm	FL-243-A	N/A	1:1	front	0.871	1.009	**0.879**	A14
1907.60	9538	UMTS 1900	RMC	23.0	22.94	0.06	10 mm	FL-243-A	N/A	1:1	front	0.810	1.014	0.821	
1880.00	9400	UMTS 1900	RMC	23.0	22.96	0.04	10 mm	FL-243-A	N/A	1:1	bottom	0.614	1.009	0.620	
1880.00	9400	UMTS 1900	RMC	23.0	22.96	-0.20	10 mm	FL-243-A	N/A	1:1	right	0.088	1.009	0.089	
1880.00	9400	UMTS 1900	RMC	23.0	22.96	0.01	10 mm	FL-243-A	N/A	1:1	left	0.381	1.009	0.384	
ANSI / IEEE C95.1 1992 - SAFETY LIMIT Spatial Peak Uncontrolled Exposure/General Population							Body 1.6 W/kg (mW/g) averaged over 1 gram								

Table 10-11
WLAN Hotspot SAR

MEASUREMENT RESULTS															
FREQUENCY		Mode	Service	Maximum Allowed Power [dBm]	Conducted Power [dBm]	Power Drift [dB]	Spacing	Device Serial Number	Data Rate (Mbps)	Side	Duty Cycle	SAR (1g)	Scaling Factor	Scaled SAR (1g)	Plot #
MHz	Ch.											(W/kg)		(W/kg)	
2412	1	IEEE 802.11b	DSSS	17.5	17.12	0.03	10 mm	FL-243-B	1	back	1:1	0.156	1.091	**0.170**	A15
2412	1	IEEE 802.11b	DSSS	17.5	17.12	0.16	10 mm	FL-243-B	1	front	1:1	0.062	1.091	0.068	
2412	1	IEEE 802.11b	DSSS	17.5	17.12	0.13	10 mm	FL-243-B	1	top	1:1	0.030	1.091	0.033	
2412	1	IEEE 802.11b	DSSS	17.5	17.12	0.00	10 mm	FL-243-B	1	left	1:1	0.107	1.091	0.117	
ANSI / IEEE C95.1 1992 - SAFETY LIMIT Spatial Peak Uncontrolled Exposure/General Population							Body 1.6 W/kg (mW/g) averaged over 1 gram								

© 2014 PCTEST Engineering Laboratory, Inc.

10.4 SAR Test Notes

General Notes:

1. The test data reported are the worst-case SAR values according to test procedures specified in IEEE 1528-2003, and FCC KDB Publication 447498 D01v05.
2. Batteries are fully charged at the beginning of the SAR measurements. A standard battery was used for all SAR measurements.
3. Liquid tissue depth was at least 15.0 cm for all frequencies.
4. The manufacturer has confirmed that the device(s) tested have the same physical, mechanical and thermal characteristics and are within operational tolerances expected for production units.
5. SAR results were scaled to the maximum allowed power to demonstrate compliance per FCC KDB Publication 447498 D01v05.
6. Device was tested using a fixed spacing for body-worn accessory testing. A separation distance of 10 mm was considered because the manufacturer has determined that there will be body-worn accessories available in the marketplace for users to support this separation distance.
7. Per FCC KDB Publication 648474 D04v01, SAR was evaluated without a headset connected to the device. Since the standalone reported SAR was ≤ 1.2 W/kg, no additional SAR evaluations using a headset cable were required.
8. Per FCC KDB 865664 D01 v01, variability SAR tests were performed when the measured SAR results for a frequency band were greater than 0.8 W/kg. Repeated SAR measurements are highlighted in the tables above for clarity. Please see Section 12 for variability analysis.
9. During SAR Testing for the Wireless Router conditions per FCC KDB Publication 941225 D06v01, the actual Portable Hotspot operation (with actual simultaneous transmission of a transmitter with WIFI) was not activated (See Section 5.7 for more details).

GSM Test Notes:

1. Body-Worn accessory testing is typically associated with voice operations. Therefore, GSM voice was evaluated for body-worn SAR.
2. Justification for reduced test configurations per KDB Publication 941225 D03v01 and October 2013 TCB Workshop Notes: The source-based frame-averaged output power was evaluated for all GPRS/EDGE slot configurations. The configuration with the highest target frame averaged output power was evaluated for hotspot SAR. When the maximum frame-averaged powers are equivalent across two or more slots (within 0.25 dB), the configuration with the most number of time slots was tested.
3. Per FCC KDB Publication 447498 D01v05, if the reported (scaled) SAR measured at the middle channel or highest output power channel for each test configuration is ≤ 0.8 W/kg then testing at the other channels is not required for such test configuration(s). When the maximum output power variation across the required test channels is > ½ dB, instead of the middle channel, the highest output power channel was used.

UMTS Notes:

1. UMTS mode in was tested under RMC 12.2 kbps with HSPA Inactive per KDB Publication 941225 D01v02. HSPA SAR was not required since the average output power of the HSPA subtests was not more than 0.25 dB higher than the RMC level and SAR was less than 1.2 W/kg.
2. Per FCC KDB Publication 447498 D01v05, if the reported (scaled) SAR measured at the middle channel or highest output power channel for each test configuration is ≤ 0.8 W/kg then testing at the other channels is not required for such test configuration(s). When the maximum output power variation across the required test channels is > ½ dB, instead of the middle channel, the highest output power channel was used.

© 2014 PCTEST Engineering Laboratory, Inc.

WLAN Notes:

1. Justification for reduced test configurations for WIFI channels per KDB Publication 248227 D01v01r02 and October 2012 FCC/TCB Meeting Notes for 2.4 GHz WIFI: Highest average RF output power channel for the lowest data rate was selected for SAR evaluation in 802.11b. Other IEEE 802.11 modes (including 802.11g/n) were not investigated since the average output powers over all channels and data rates were not more than 0.25 dB higher than the tested channel in the lowest data rate of IEEE 802.11b mode.
2. Justification for reduced test configurations for WIFI channels per KDB Publication 248227 D01v01r02 and October 2012 FCC/TCB Meeting Notes for 5 GHz WIFI: Highest average RF output power channel for the lowest data rate was selected for SAR evaluation in 802.11a. Other IEEE 802.11 modes (including 802.11n) were not investigated since the average output powers over all channels and data rates were not more than 0.25 dB higher than the tested channel in the lowest data rate of IEEE 802.11a mode.
3. When Hotspot is enabled, all 5 GHz bands are disabled. Therefore no 5 GHz WIFI Wireless Router SAR Data was required.
4. WIFI transmission was verified using an uncalibrated spectrum analyzer.
5. Since the maximum extrapolated peak SAR of the zoom scan for the maximum output channel is <1.6 W/kg and the reported 1g averaged SAR is <0.8 W/kg, SAR testing on other default channels was not required.

© 2014 PCTEST Engineering Laboratory, Inc.

11 FCC MULTI-TX AND ANTENNA SAR CONSIDERATIONS

11.1 Introduction

The following procedures adopted from FCC KDB Publication 447498 D01v05 are applicable to handsets with built-in unlicensed transmitters such as 802.11a/b/g/n and Bluetooth devices which may simultaneously transmit with the licensed transmitter.

11.2 Simultaneous Transmission Procedures

This device contains transmitters that may operate simultaneously. Therefore simultaneous transmission analysis is required. Per FCC KDB 447498 D01v05 IV.C.1.iii and IEEE 1528-2013 Section 6.3.4.1.2, simultaneous transmission SAR test exclusion may be applied when the sum of the 1-g SAR for all the simultaneous transmitting antennas in a specific a physical test configuration is ≤1.6 W/kg. When standalone SAR is not required to be measured, per FCC KDB 447498 D01v05 4.3.2 2), the following equation must be used to estimate the standalone 1g SAR for simultaneous transmission assessment involving that transmitter.

$$\text{Estimated SAR} = \frac{\sqrt{f(GHz)}}{7.5} * \frac{(\text{Max Power of channel, mW})}{\text{Min. Separation Distance, mm}}$$

Table 11-1
Estimated SAR

Mode	Frequency	Maximum Allowed Power	Separation Distance (Body)	Estimated SAR (Body)
	[MHz]	[dBm]	[mm]	[W/kg]
Bluetooth	2441	7.50	10	**0.125**

Note: Held-to ear configurations are not applicable to Bluetooth operations and therefore were not considered for simultaneous transmission. Per KDB Publication 447498 D01v05, the maximum power of the channel was rounded to the nearest mW before calculation.

11.3 Head SAR Simultaneous Transmission Analysis

Table 11-2
Simultaneous Transmission Scenario with 2.4 GHz WLAN (Held to Ear)

Simult Tx	Configuration	GSM 850 SAR (W/kg)	2.4 GHz WLAN SAR (W/kg)	Σ SAR (W/kg)
Head SAR	Right Cheek	0.222	0.555	**0.777**
	Right Tilt	0.154	0.130	0.284
	Left Cheek	0.304	0.175	0.479
	Left Tilt	0.195	0.095	0.290

Simult Tx	Configuration	GSM 1900 SAR (W/kg)	2.4 GHz WLAN SAR (W/kg)	Σ SAR (W/kg)
Head SAR	Right Cheek	0.398	0.555	**0.953**
	Right Tilt	0.260	0.130	0.390
	Left Cheek	0.725	0.175	0.900
	Left Tilt	0.171	0.095	0.266

Simult Tx	Configuration	UMTS 850 SAR (W/kg)	2.4 GHz WLAN SAR (W/kg)	Σ SAR (W/kg)
Head SAR	Right Cheek	0.180	0.555	**0.735**
	Right Tilt	0.141	0.130	0.271
	Left Cheek	0.240	0.175	0.415
	Left Tilt	0.157	0.095	0.252

Simult Tx	Configuration	UMTS 1900 SAR (W/kg)	2.4 GHz WLAN SAR (W/kg)	Σ SAR (W/kg)
Head SAR	Right Cheek	0.503	0.555	1.058
	Right Tilt	0.304	0.130	0.434
	Left Cheek	0.890	0.175	**1.065**
	Left Tilt	0.200	0.095	0.295

© 2014 PCTEST Engineering Laboratory, Inc.

Table 11-3
Simultaneous Transmission Scenario with 5 GHz WLAN (Held to Ear)

Simult Tx	Configuration	GSM 850 SAR (W/kg)	5 GHz WLAN SAR (W/kg)	Σ SAR (W/kg)
Head SAR	Right Cheek	0.222	0.111	**0.333**
	Right Tilt	0.154	0.055	0.209
	Left Cheek	0.304	0.024	0.328
	Left Tilt	0.195	0.026	0.221

Simult Tx	Configuration	GSM 1900 SAR (W/kg)	5 GHz WLAN SAR (W/kg)	Σ SAR (W/kg)
Head SAR	Right Cheek	0.398	0.111	0.509
	Right Tilt	0.260	0.055	0.315
	Left Cheek	0.725	0.024	**0.749**
	Left Tilt	0.171	0.026	0.197

Simult Tx	Configuration	UMTS 850 SAR (W/kg)	5 GHz WLAN SAR (W/kg)	Σ SAR (W/kg)
Head SAR	Right Cheek	0.180	0.111	**0.291**
	Right Tilt	0.141	0.055	0.196
	Left Cheek	0.240	0.024	0.264
	Left Tilt	0.157	0.026	0.183

Simult Tx	Configuration	UMTS 1900 SAR (W/kg)	5 GHz WLAN SAR (W/kg)	Σ SAR (W/kg)
Head SAR	Right Cheek	0.503	0.111	0.614
	Right Tilt	0.304	0.055	0.359
	Left Cheek	0.890	0.024	**0.914**
	Left Tilt	0.200	0.026	0.226

11.4 Body-Worn Simultaneous Transmission Analysis

Table 11-4
Simultaneous Transmission Scenario with 2.4 GHz WLAN (Body-Worn at 1.0 cm)

Configuration	Mode	2G/3G SAR (W/kg)	2.4 GHz WLAN SAR (W/kg)	Σ SAR (W/kg)
Back Side	GSM 850	0.421	0.170	0.591
Back Side	GSM 1900	0.487	0.170	0.657
Back Side	UMTS 850	0.344	0.170	0.514
Back Side	UMTS 1900	0.599	0.170	**0.769**

Table 11-5
Simultaneous Transmission Scenario with 5 GHz WLAN (Body-Worn at 1.0 cm)

Configuration	Mode	2G/3G SAR (W/kg)	5 GHz WLAN SAR (W/kg)	Σ SAR (W/kg)
Back Side	GSM 850	0.421	0.130	0.551
Back Side	GSM 1900	0.487	0.130	0.617
Back Side	UMTS 850	0.344	0.130	0.474
Back Side	UMTS 1900	0.599	0.130	**0.729**

Table 11-6
Simultaneous Transmission Scenario with Bluetooth (Body-Worn at 1.0 cm)

Configuration	Mode	2G/3G SAR (W/kg)	Bluetooth SAR (W/kg)	Σ SAR (W/kg)
Back Side	GSM 850	0.421	0.125	0.546
Back Side	GSM 1900	0.487	0.125	0.612
Back Side	UMTS 850	0.344	0.125	0.469
Back Side	UMTS 1900	0.599	0.125	**0.724**

Note: Bluetooth SAR was not required to be measured per FCC KDB 447498. Estimated SAR results were used in the above table to determine simultaneous transmission SAR test exclusion.

© 2014 PCTEST Engineering Laboratory, Inc.

11.5 Hotspot SAR Simultaneous Transmission Analysis

Per FCC KDB Publication 941225 D06v01, the devices edges with antennas more than 2.5 cm from edge are not required to be evaluated for SAR ("-").

Table 11-7
Simultaneous Transmission Scenario (2.4 GHz Hotspot at 1.0 cm)

Simult Tx	Configuration	GPRS 850 SAR (W/kg)	2.4 GHz WLAN SAR (W/kg)	Σ SAR (W/kg)
Body SAR	Back	0.447	0.170	**0.617**
	Front	0.338	0.068	0.406
	Top	-	0.033	0.033
	Bottom	0.049	-	0.049
	Right	0.209	-	0.209
	Left	0.383	0.117	0.500

Simult Tx	Configuration	GPRS 1900 SAR (W/kg)	2.4 GHz WLAN SAR (W/kg)	Σ SAR (W/kg)
Body SAR	Back	0.420	0.170	0.590
	Front	0.604	0.068	**0.672**
	Top	-	0.033	0.033
	Bottom	0.425	-	0.425
	Right	0.066	-	0.066
	Left	0.255	0.117	0.372

Simult Tx	Configuration	UMTS 850 SAR (W/kg)	2.4 GHz WLAN SAR (W/kg)	Σ SAR (W/kg)
Body SAR	Back	0.344	0.170	**0.514**
	Front	0.280	0.068	0.348
	Top	-	0.033	0.033
	Bottom	0.044	-	0.044
	Right	0.173	-	0.173
	Left	0.323	0.117	0.440

Simult Tx	Configuration	UMTS 1900 SAR (W/kg)	2.4 GHz WLAN SAR (W/kg)	Σ SAR (W/kg)
Body SAR	Back	0.599	0.170	0.769
	Front	0.879	0.068	**0.947**
	Top	-	0.033	0.033
	Bottom	0.620	-	0.620
	Right	0.089	-	0.089
	Left	0.384	0.117	0.501

11.6 Simultaneous Transmission Conclusion

The above numerical summed SAR results for all the worst-case simultaneous transmission conditions were below the SAR limit. Therefore, the above analysis is sufficient to determine that simultaneous transmission cases will not exceed the SAR limit and therefore no measured volumetric simultaneous SAR summation is required per FCC KDB Publication 447498 D01v05 and IEEE 1528-2013 Section 6.3.4.1.2.

© 2014 PCTEST Engineering Laboratory, Inc.

12 SAR MEASUREMENT VARIABILITY

12.1 Measurement Variability

Per FCC KDB Publication 865664 D01v01, SAR measurement variability was assessed for each frequency band, which was determined by the SAR probe calibration point and tissue-equivalent medium used for the device measurements. When both head and body tissue-equivalent media were required for SAR measurements in a frequency band, the variability measurement procedures were applied to the tissue medium with the highest measured SAR, using the highest measured SAR configuration for that tissue-equivalent medium. These additional measurements were repeated after the completion of all measurements requiring the same head or body tissue-equivalent medium in a frequency band. The test device was returned to ambient conditions (normal room temperature) with the battery fully charged before it was re-mounted on the device holder for the repeated measurement(s) to minimize any unexpected variations in the repeated results.

SAR Measurement Variability was assessed using the following procedures for each frequency band:

1) When the original highest measured SAR is ≥ 0.80 W/kg, the measurement was repeated once.
2) A second repeated measurement was preformed only if the ratio of largest to smallest SAR for the original and first repeated measurements was > 1.20 or when the original or repeated measurement was ≥ 1.45 W/kg (~ 10% from the 1-g SAR limit).
3) A third repeated measurement was performed only if the original, first or second repeated measurement was ≥ 1.5 W/kg and the ratio of largest to smallest SAR for the original, first and second repeated measurements is > 1.20.
4) Repeated measurements are not required when the original highest measured SAR is < 0.80 W/kg

Table 12-1
Head SAR Measurement Variability Results

HEAD VARIABILITY RESULTS													
Band	FREQUENCY		Mode/Band	Service	Side	Test Position	Measured SAR (1g)	1st Repeated SAR (1g)	Ratio	2nd Repeated SAR (1g)	Ratio	3rd Repeated SAR (1g)	Ratio
	MHz	Ch.					(W/kg)	(W/kg)		(W/kg)		(W/kg)	
1900	1880.00	9400	UMTS 1900	RMC	Left	Cheek	0.882	0.824	1.07	N/A	N/A	N/A	N/A
ANSI / IEEE C95.1 1992 - SAFETY LIMIT Spatial Peak Uncontrolled Exposure/General Population					Head 1.6 W/kg (mW/g) averaged over 1 gram								

12.2 Measurement Uncertainty

The measured SAR was <1.5 W/kg for all frequency bands. Therefore, per KDB Publication 865664 D01v01, the extended measurement uncertainty analysis per IEEE 1528-2003 was not required.

© 2014 PCTEST Engineering Laboratory, Inc.

13 EQUIPMENT LIST

Manufacturer	Model	Description	Cal Date	Cal Interval	Cal Due	Serial Number
Agilent	8594A	(9kHz-2.9GHz) Spectrum Analyzer	N/A	N/A	N/A	3051A00187
Agilent	8648D	(9kHz-4GHz) Signal Generator	4/15/2014	Annual	4/15/2015	3629U00687
Agilent	8753E	(30kHz-6GHz) Network Analyzer	7/23/2013	Annual	7/23/2014	US37390350
Agilent	8753ES	S-Parameter Network Analyzer	10/29/2013	Annual	10/29/2014	US39170122
Agilent	8753ES	S-Parameter Network Analyzer	5/22/2014	Annual	5/22/2015	US39170118
Agilent	E4438C	ESG Vector Signal Generator	3/31/2014	Annual	3/31/2015	MY42082659
Agilent	E4438C	ESG Vector Signal Generator	4/15/2014	Annual	4/15/2015	MY45091346
Agilent	E5515C	Wireless Communications Test Set	5/9/2013	Biennial	5/9/2015	GB43304447
Agilent	E5515C	Wireless Communications Test Set	3/19/2014	Annual	3/19/2015	GB45360985
Agilent	E5515C	Wireless Communications Test Set	10/18/2012	Biennial	10/18/2014	GB43193563
Agilent	E8257D	(250kHz-20GHz) Signal Generator	4/15/2014	Annual	4/15/2015	MY45470194
Agilent	N5182A	MXG Vector Signal Generator	4/15/2014	Annual	4/15/2015	MY47420800
Agilent	N5182A	MXG Vector Signal Generator	4/15/2014	Annual	4/15/2015	MY47420651
Agilent	N9020A	MXA Signal Analyzer	10/29/2013	Annual	10/29/2014	US46470561
Amplifier Research	15S1G6	Amplifier	CBT	N/A	CBT	433977
Amplifier Research	15S1G6	Amplifier	CBT	N/A	CBT	433978
Anritsu	MA24106A	USB Power Sensor	5/14/2014	Annual	5/14/2015	1231538
Anritsu	MA24106A	USB Power Sensor	5/14/2014	Annual	5/14/2015	1231535
Anritsu	MA24106A	USB Power Sensor	5/15/2014	Annual	5/15/2015	1244524
Anritsu	MA24106A	USB Power Sensor	5/14/2014	Annual	5/14/2015	1244515
Anritsu	MA2411B	Pulse Power Sensor	11/14/2013	Annual	11/14/2014	1126066
Anritsu	MA2411B	Pulse Power Sensor	3/25/2014	Annual	3/25/2015	1207470
Anritsu	MA2481A	Power Sensor	10/30/2013	Annual	10/30/2014	5605
Anritsu	ML2469A	Power Meter	3/14/2014	Annual	3/14/2015	1306009
Anritsu	ML2495A	Power Meter	10/31/2013	Annual	10/31/2014	1039008
Anritsu	MT8820C	Radio Communication Analyzer	12/12/2013	Annual	12/12/2014	6200901190
Anritsu	MT8820C	Radio Communication Analyzer	6/28/2013	Annual	6/28/2014	6201240328
COMTech	AR85729-5	Solid State Amplifier	CBT	N/A	CBT	M1S5A00-009
COMTECH	AR85729-5/5759B	Solid State Amplifier	CBT	N/A	CBT	M3W1A00-1002
Control Company	4353	Long Stem Thermometer	9/25/2012	Biennial	9/25/2014	122541139
Control Company	36934-158	Wall-Mounted Thermometer	4/29/2014	Biennial	4/29/2016	122014488
Control Company	61220-416	Long-Stem Thermometer	4/29/2014	Biennial	4/29/2016	111331323
Fisher Scientific	15-077-960	Digital Thermometer	12/4/2013	Biennial	12/4/2015	130764558
Fisher Scientific	15-078J	Long Stem Thermometer	1/7/2013	Biennial	1/7/2015	130018243
Fisher Scientific	S407993	Long Stem Thermometer	11/4/2013	Biennial	11/4/2015	130671826
Fisher Scientific	S97611	Thermometer	4/12/2013	Biennial	4/12/2015	130219303
Gigatronics	80701A	(0.05-18GHz) Power Sensor	10/30/2013	Annual	10/30/2014	1833460
Gigatronics	8651A	Universal Power Meter	10/30/2013	Annual	10/30/2014	8650319
MCL	BW-N6W5+	6dB Attenuator	CBT	N/A	CBT	1139
MiniCircuits	SLP-2400+	Low Pass Filter	CBT	N/A	CBT	R8979500903
MiniCircuits	VLF-6000+	Low Pass Filter	CBT	N/A	CBT	N/A
Mini-Circuits	BW-N20W5	Power Attenuator	CBT	N/A	CBT	1226
Mini-Circuits	BW-N20W5+	DC to 18 GHz Precision Fixed 20 dB Attenuator	CBT	N/A	CBT	N/A
Mini-Circuits	NLP-1200+	Low Pass Filter DC to 1000 MHz	CBT	N/A	CBT	N/A
Mini-Circuits	NLP-2950+	Low Pass Filter DC to 2700 MHz	CBT	N/A	CBT	N/A
Mitutoyo	CD-6"CSX	Digital Caliper	5/8/2014	Biennial	5/8/2016	13264162
Mitutoyo	CD-6"CSX	Digital Caliper	5/8/2014	Biennial	5/8/2016	13264165
Narda	4014C-6	4 - 8 GHz SMA 6 dB Directional Coupler	CBT	N/A	CBT	N/A
Narda	4772-3	Attenuator (3dB)	CBT	N/A	CBT	9406
Narda	BW-S3W2	Attenuator (3dB)	CBT	N/A	CBT	120
Pasternack	PE2208-6	Bidirectional Coupler	CBT	N/A	CBT	N/A
Pasternack	PE2209-10	Bidirectional Coupler	CBT	N/A	CBT	N/A
Rohde & Schwarz	CMU200	Base Station Simulator	6/6/2014	Annual	6/6/2015	109892
Rohde & Schwarz	CMW500	Base Station Simulator	4/23/2014	Annual	4/23/2015	112347
Rohde & Schwarz	NRVD	Dual Channel Power Meter	10/12/2012	Biennial	10/12/2014	101695
Rohde & Schwarz	NRVS	Single Channel Power Meter	10/31/2013	Annual	10/31/2014	835360/0079
Rohde & Schwarz	NRV-Z32	Peak Power Sensor	10/12/2012	Biennial	10/12/2014	836019/013
Rohde & Schwarz	SME06	Signal Generator	10/30/2013	Annual	10/30/2014	832026
Seekonk	NC-100	Torque Wrench	3/18/2014	Biennial	3/18/2016	N/A
Seekonk	NC-100	Torque Wrench	3/18/2014	Biennial	3/18/2016	N/A
Seekonk	NC-100	Torque Wrench	3/18/2014	Biennial	3/18/2016	22313
Seekonk	NC-100	Torque Wrench 5/16", 8" lbs	3/18/2014	Biennial	3/18/2016	N/A
SPEAG	D1900V2	1900 MHz SAR Dipole	2/27/2014	Annual	2/27/2015	5d148
SPEAG	D2450V2	2450 MHz SAR Dipole	8/23/2013	Annual	8/23/2014	719
SPEAG	D2450V2	2450 MHz SAR Dipole	1/21/2014	Annual	1/21/2015	797
SPEAG	D5GHzV2	5 GHz SAR Dipole	9/23/2013	Annual	9/23/2014	1007
SPEAG	D5GHzV2	5 GHz SAR Dipole	1/27/2014	Annual	1/27/2015	1057
SPEAG	D835V2	835 MHz SAR Dipole	4/7/2014	Annual	4/7/2015	4d119
SPEAG	D835V2	835 MHz SAR Dipole	7/17/2013	Annual	7/17/2014	4d133
SPEAG	DAE4	Dasy Data Acquisition Electronics	2/26/2014	Annual	2/26/2015	665
SPEAG	DAE4	Dasy Data Acquisition Electronics	12/12/2013	Annual	12/12/2014	649
SPEAG	DAE4	Dasy Data Acquisition Electronics	9/17/2013	Annual	9/17/2014	1323
SPEAG	DAE4	Dasy Data Acquisition Electronics	11/19/2013	Annual	11/19/2014	1333
SPEAG	DAE4	Dasy Data Acquisition Electronics	3/17/2014	Annual	3/17/2015	1334
SPEAG	DAE4	Dasy Data Acquisition Electronics	3/17/2014	Annual	3/17/2015	1364
SPEAG	DAE4	Dasy Data Acquisition Electronics	4/11/2014	Annual	4/11/2015	1368
SPEAG	DAK-3.5	Dielectric Assessment Kit	5/6/2014	Annual	5/6/2015	1070
SPEAG	DAK-3.5	Dielectric Assessment Kit	11/13/2013	Annual	11/13/2014	1091
SPEAG	DAKS-3.5	Portable Dielectric Assessment Kit	8/18/2013	Annual	8/18/2014	1008
SPEAG	DAKS-3.5	Portable Dielectric Assessment Kit	8/18/2013	Annual	8/18/2014	1009
SPEAG	ES3DV3	SAR Probe	4/11/2014	Annual	4/11/2015	3213
SPEAG	ES3DV3	SAR Probe	3/19/2014	Annual	3/19/2015	3209
SPEAG	ES3DV3	SAR Probe	2/25/2014	Annual	2/25/2015	3258
SPEAG	ES3DV3	SAR Probe	9/23/2013	Annual	9/23/2014	3288
SPEAG	ES3DV3	SAR Probe	4/17/2014	Annual	4/17/2015	3319
SPEAG	EX3DV4	SAR Probe	12/18/2013	Annual	12/18/2014	3920
SPEAG	EX3DV4	SAR Probe	10/23/2013	Annual	10/23/2014	3914
Tektronix	RSA6114A	Real Time Spectrum Analyzer	4/16/2014	Annual	4/16/2015	B010177
VWR	23226-658	Long Stem Thermometer	7/11/2012	Biennial	7/11/2014	122389334
VWR	23226-658	Long Stem Thermometer	6/27/2012	Biennial	6/27/2014	122363923
VWR	36934-158	Wall-Mounted Thermometer	8/8/2013	Biennial	8/8/2015	130477877
VWR	36934-158	Wall-Mounted Thermometer	8/8/2013	Biennial	8/8/2015	130477866

Note: CBT (Calibrated Before Testing). Prior to testing, the measurement paths containing a cable, amplifier, attenuator, coupler or filter were connected to a calibrated source (i.e. a signal generator) to determine the losses of the measurement path. The power meter offset was then adjusted to compensate for the measurement system losses. This level offset is stored within the power meter before measurements are made. This calibration verification procedure applies to the system verification and output power measurements. The calibrated reading is then taken directly from the power meter after compensation of the losses for all final power measurements.

© 2014 PCTEST Engineering Laboratory, Inc.

14 MEASUREMENT UNCERTAINTIES

Applicable for frequencies less than 3000 MHz.

a	b	c	d	e= f(d,k)	f	g	h = c x f/e	i = c x g/e	k
Uncertainty Component	**IEEE 1528 Sec.**	**Tol. (± %)**	**Prob. Dist.**	**Div.**	**c_i 1gm**	**c_i 10 gms**	**1gm u_i (± %)**	**10gms u_i (± %)**	**v_i**
Measurement System									
Probe Calibration	E.2.1	6.0	N	1	1.0	1.0	6.0	6.0	∞
Axial Isotropy	E.2.2	0.25	N	1	0.7	0.7	0.2	0.2	∞
Hemishperical Isotropy	E.2.2	1.3	N	1	1.0	1.0	1.3	1.3	∞
Boundary Effect	E.2.3	0.4	N	1	1.0	1.0	0.4	0.4	∞
Linearity	E.2.4	0.3	N	1	1.0	1.0	0.3	0.3	∞
System Detection Limits	E.2.5	5.1	N	1	1.0	1.0	5.1	5.1	∞
Readout Electronics	E.2.6	1.0	N	1	1.0	1.0	1.0	1.0	∞
Response Time	E.2.7	0.8	R	1.73	1.0	1.0	0.5	0.5	∞
Integration Time	E.2.8	2.6	R	1.73	1.0	1.0	1.5	1.5	∞
RF Ambient Conditions	E.6.1	3.0	R	1.73	1.0	1.0	1.7	1.7	∞
Probe Positioner Mechanical Tolerance	E.6.2	0.4	R	1.73	1.0	1.0	0.2	0.2	∞
Probe Positioning w/ respect to Phantom	E.6.3	2.9	R	1.73	1.0	1.0	1.7	1.7	∞
Extrapolation, Interpolation & Integration algorithms for Max. SAR Evaluation	E.5	1.0	R	1.73	1.0	1.0	0.6	0.6	∞
Test Sample Related									
Test Sample Positioning	E.4.2	6.0	N	1	1.0	1.0	6.0	6.0	287
Device Holder Uncertainty	E.4.1	3.32	R	1.73	1.0	1.0	1.9	1.9	∞
Output Power Variation - SAR drift measurement	6.6.2	5.0	R	1.73	1.0	1.0	2.9	2.9	∞
Phantom & Tissue Parameters									
Phantom Uncertainty (Shape & Thickness tolerances)	E.3.1	4.0	R	1.73	1.0	1.0	2.3	2.3	∞
Liquid Conductivity - deviation from target values	E.3.2	5.0	R	1.73	0.64	0.43	1.8	1.2	∞
Liquid Conductivity - measurement uncertainty	E.3.3	3.8	N	1	0.64	0.43	2.4	1.6	6
Liquid Permittivity - deviation from target values	E.3.2	5.0	R	1.73	0.60	0.49	1.7	1.4	∞
Liquid Permittivity - measurement uncertainty	E.3.3	4.5	N	1	0.60	0.49	2.7	2.2	6
Combined Standard Uncertainty (k=1)			RSS				12.1	11.7	299
Expanded Uncertainty (95% CONFIDENCE LEVEL)			k=2				24.2	23.5	

The above measurement uncertainties are according to IEEE Std. 1528-2003

© 2014 PCTEST Engineering Laboratory, Inc.

Applicable for frequencies up to 6 GHz.

a	b	c	d	e= f(d,k)	f	g	h = c x f/e	i = c x g/e	k
Uncertainty Component	**IEEE 1528 Sec.**	**Tol. (± %)**	**Prob. Dist.**	**Div.**	**c_i 1gm**	**c_i 10 gms**	**1gm u_i (± %)**	**10gms u_i (± %)**	**v_i**
Measurement System									
Probe Calibration	E.2.1	6.55	N	1	1.0	1.0	6.6	6.6	∞
Axial Isotropy	E.2.2	0.25	N	1	0.7	0.7	0.2	0.2	∞
Hemishperical Isotropy	E.2.2	1.3	N	1	1.0	1.0	1.3	1.3	∞
Boundary Effect	E.2.3	0.4	N	1	1.0	1.0	0.4	0.4	∞
Linearity	E.2.4	0.3	N	1	1.0	1.0	0.3	0.3	∞
System Detection Limits	E.2.5	5.1	N	1	1.0	1.0	5.1	5.1	∞
Readout Electronics	E.2.6	1.0	N	1	1.0	1.0	1.0	1.0	∞
Response Time	E.2.7	0.8	R	1.73	1.0	1.0	0.5	0.5	∞
Integration Time	E.2.8	2.6	R	1.73	1.0	1.0	1.5	1.5	∞
RF Ambient Conditions	E.6.1	3.0	R	1.73	1.0	1.0	1.7	1.7	∞
Probe Positioner Mechanical Tolerance	E.6.2	0.4	R	1.73	1.0	1.0	0.2	0.2	∞
Probe Positioning w/ respect to Phantom	E.6.3	2.9	R	1.73	1.0	1.0	1.7	1.7	∞
Extrapolation, Interpolation & Integration algorithms for Max. SAR Evaluation	E.5	1.0	R	1.73	1.0	1.0	0.6	0.6	∞
Test Sample Related									
Test Sample Positioning	E.4.2	6.0	N	1	1.0	1.0	6.0	6.0	287
Device Holder Uncertainty	E.4.1	3.32	R	1.73	1.0	1.0	1.9	1.9	∞
Output Power Variation - SAR drift measurement	6.6.2	5.0	R	1.73	1.0	1.0	2.9	2.9	∞
Phantom & Tissue Parameters									
Phantom Uncertainty (Shape & Thickness tolerances)	E.3.1	4.0	R	1.73	1.0	1.0	2.3	2.3	∞
Liquid Conductivity - deviation from target values	E.3.2	5.0	R	1.73	0.64	0.43	1.8	1.2	∞
Liquid Conductivity - measurement uncertainty	E.3.3	3.8	N	1	0.64	0.43	2.4	1.6	6
Liquid Permittivity - deviation from target values	E.3.2	5.0	R	1.73	0.60	0.49	1.7	1.4	∞
Liquid Permittivity - measurement uncertainty	E.3.3	4.5	N	1	0.60	0.49	2.7	2.2	6
Combined Standard Uncertainty (k=1)			RSS				12.4	12.0	299
Expanded Uncertainty (95% CONFIDENCE LEVEL)			k=2				24.7	24.0	

The above measurement uncertainties are according to IEEE Std. 1528-2003

© 2014 PCTEST Engineering Laboratory, Inc.

15 CONCLUSION

15.1 Measurement Conclusion

The SAR evaluation indicates that the EUT complies with the RF radiation exposure limits of the FCC and Industry Canada, with respect to all parameters subject to this test. These measurements were taken to simulate the RF effects of RF exposure under worst-case conditions. Precise laboratory measures were taken to assure repeatability of the tests. The results and statements relate only to the item(s) tested.

Please note that the absorption and distribution of electromagnetic energy in the body are very complex phenomena that depend on the mass, shape, and size of the body, the orientation of the body with respect to the field vectors, and the electrical properties of both the body and the environment. Other variables that may play a substantial role in possible biological effects are those that characterize the environment (e.g. ambient temperature, air velocity, relative humidity, and body insulation) and those that characterize the individual (e.g. age, gender, activity level, debilitation, or disease). Because various factors may interact with one another to vary the specific biological outcome of an exposure to electromagnetic fields, any protection guide should consider maximal amplification of biological effects as a result of field-body interactions, environmental conditions, and physiological variables. [3]

© 2014 PCTEST Engineering Laboratory, Inc.

16 REFERENCES

[1] Federal Communications Commission, ET Docket 93-62, Guidelines for Evaluating the Environmental Effects of Radiofrequency Radiation, Aug. 1996.

[2] ANSI/IEEE C95.1-2005, American National Standard safety levels with respect to human exposure to radio frequency electromagnetic fields, 3kHz to 300GHz, New York: IEEE, 2006.

[3] ANSI/IEEE C95.1-1992, American National Standard safety levels with respect to human exposure to radio frequency electromagnetic fields, 3kHz to 300GHz, New York: IEEE, Sept. 1992.

[4] ANSI/IEEE C95.3-2002, IEEE Recommended Practice for the Measurement of Potentially Hazardous Electromagnetic Fields - RF and Microwave, New York: IEEE, December 2002.

[5] IEEE Standards Coordinating Committee 39 –Standards Coordinating Committee 34 – IEEE Std. 1528-2003, Recommended Practice for Determining the Peak Spatial-Average Specific Absorption Rate (SAR) in the Human Body Due to Wireless Communications Devices.

[6] NCRP, National Council on Radiation Protection and Measurements, Biological Effects and Exposure Criteria for RadioFrequency Electromagnetic Fields, NCRP Report No. 86, 1986. Reprinted Feb. 1995.

[7] T. Schmid, O. Egger, N. Kuster, Automated E-field scanning system for dosimetric assessments, IEEE Transaction on Microwave Theory and Techniques, vol. 44, Jan. 1996, pp. 105-113.

[8] K. Pokovic, T. Schmid, N. Kuster, Robust setup for precise calibration of E-field probes in tissue simulating liquids at mobile communications frequencies, ICECOM97, Oct. 1997, pp. -124.

[9] K. Pokovic, T. Schmid, and N. Kuster, E-field Probe with improved isotropy in brain simulating liquids, Proceedings of the ELMAR, Zadar, Croatia, June 23-25, 1996, pp. 172-175.

[10] Schmid & Partner Engineering AG, Application Note: Data Storage and Evaluation, June 1998, p2.

[11] V. Hombach, K. Meier, M. Burkhardt, E. Kuhn, N. Kuster, The Dependence of EM Energy Absorption upon Human Modeling at 900 MHz, IEEE Transaction on Microwave Theory and Techniques, vol. 44 no. 10, Oct. 1996, pp. 1865-1873.

[12] N. Kuster and Q. Balzano, Energy absorption mechanism by biological bodies in the near field of dipole antennas above 300MHz, IEEE Transaction on Vehicular Technology, vol. 41, no. 1, Feb. 1992, pp. 17-23.

[13] G. Hartsgrove, A. Kraszewski, A. Surowiec, Simulated Biological Materials for Electromagnetic Radiation Absorption Studies, University of Ottawa, Bioelectromagnetics, Canada: 1987, pp. 29-36.

[14] Q. Balzano, O. Garay, T. Manning Jr., Electromagnetic Energy Exposure of Simulated Users of Portable Cellular Telephones, IEEE Transactions on Vehicular Technology, vol. 44, no.3, Aug. 1995.

[15] W. Gander, Computermathematick, Birkhaeuser, Basel, 1992.

[16] W.H. Press, S.A. Teukolsky, W.T. Vetterling, and B.P. Flannery, Numerical Recipes in C, The Art of Scientific Computing, Second edition, Cambridge University Press, 1992.

[17] N. Kuster, R. Kastle, T. Schmid, Dosimetric evaluation of mobile communications equipment with known precision, IEEE Transaction on Communications, vol. E80-B, no. 5, May 1997, pp. 645-652.

[18] CENELEC CLC/SC111B, European Prestandard (prENV 50166-2), Human Exposure to Electromagnetic Fields High-frequency: 10kHz-300GHz, Jan. 1995.

© 2014 PCTEST Engineering Laboratory, Inc.

[19] Prof. Dr. Niels Kuster, ETH, Eidgenössische Technische Hoschschule Zürich, Dosimetric Evaluation of the Cellular Phone.

[20] IEC 62209-1, Human exposure to radio frequency fields from hand-held and body-mounted wireless communication devices - Human models, instrumentation, and procedures - Part 1: Procedure to determine the specific absorption rate (SAR) for hand-held devices used in close proximity to the ear (frequency range of 300 MHz to 3 GHz), Feb. 2005.

[21] Industry Canada RSS-102 Radio Frequency Exposure Compliance of Radiocommunication Apparatus (All Frequency Bands) Issue 4, March 2010.

[22] Health Canada Safety Code 6 Limits of Human Exposure to Radio Frequency Electromagnetic Fields in the Frequency Range from 3 kHz – 300 GHz, 2009

[23] FCC SAR Test Procedures for 2G-3G Devices, Mobile Hotspot and UMPC Devices KDB Publications 941225, D01-D07

[24] SAR Measurement procedures for IEEE 802.11a/b/g KDB Publication 248227 D01v01r02

[25] FCC SAR Considerations for Handsets with Multiple Transmitters and Antennas, KDB Publications 648474 D02-D04

[26] FCC SAR Evaluation Considerations for Laptop, Notebook, Netbook and Tablet Computers, FCC KDB Publication 616217 D04

[27] FCC SAR Measurement and Reporting Requirements for 100MHz – 6 GHz, KDB Publications 865664 D01-D02

[28] FCC General RF Exposure Guidance and SAR Procedures for Dongles, KDB Publication 447498, D01-D02

[29] Anexo à Resolução No. 533, de 10 de Septembro de 2009.

[30] IEC 62209-2, Human exposure to radio frequency fields from hand-held and body-mounted wireless communication devices - Human models, instrumentation, and procedures - Part 2: Procedure to determine the specific absorption rate (SAR) for wireless communication devices used in close proximity to the human body (frequency range of 30 MHz to 6 GHz), Mar. 2010.

© 2014 PCTEST Engineering Laboratory, Inc.

APPENDIX A: SAR TEST DATA

© 2014 PCTEST Engineering Laboratory, Inc.

PCTEST ENGINEERING LABORATORY, INC.

DUT: A3LSMG800H; Type: Portable Handset; Serial: FL-243-B

Communication System: UID 0, GSM; Frequency: 836.6 MHz; Duty Cycle: 1:8.3
Medium: 835 Head Medium parameters used (interpolated):
f = 836.6 MHz; σ = 0.895 S/m; ε_r = 39.989; ρ = 1000 kg/m^3
Phantom section: Left Section

Test Date: 06-17-2014; Ambient Temp: 23.8°C; Tissue Temp: 23.5°C

Probe: ES3DV3 - SN3209; ConvF(6.23, 6.23, 6.23); Calibrated: 3/19/2014;
Sensor-Surface: 3mm (Mechanical Surface Detection)
Electronics: DAE4 Sn1334; Calibrated: 3/17/2014
Phantom: SAM front; Type: QD000P40CD; Serial: TP:1759
Measurement SW: DASY52, Version 52.8 (8); SEMCAD X Version 14.6.10 (7164)

Mode: GSM 850, Left Head, Cheek, Mid.ch

Area Scan (8x12x1): Measurement grid: dx=15mm, dy=15mm
Zoom Scan (5x5x7)/Cube 0: Measurement grid: dx=8mm, dy=8mm, dz=5mm
Reference Value = 18.011 V/m; Power Drift = 0.07 dB
Peak SAR (extrapolated) = 0.370 W/kg
SAR(1 g) = 0.285 W/kg

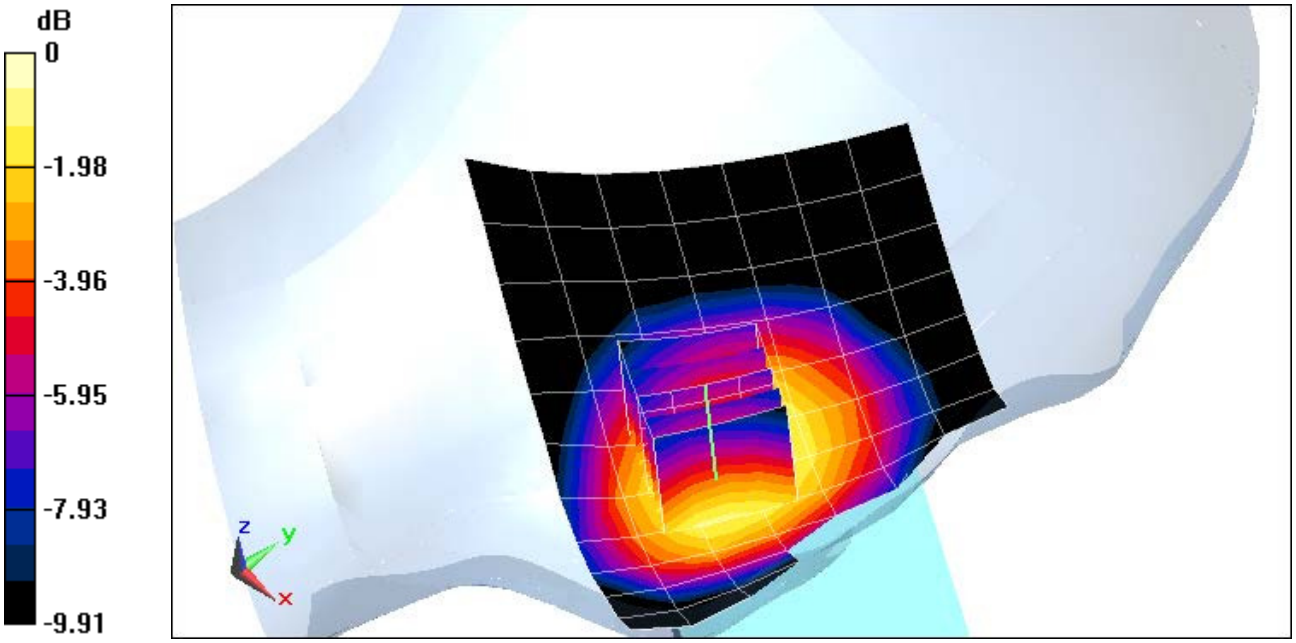

0 dB = 0.315 W/kg = -5.02 dBW/kg

PCTEST ENGINEERING LABORATORY, INC.

DUT: A3LSMG800H; Type: Portable Handset; Serial: FL-243-B

Communication System: UID 0, GSM1900; Frequency: 1880 MHz; Duty Cycle: 1:8.3
Medium: 1900 Head Medium parameters used:
f = 1880 MHz; σ = 1.421 S/m; ε_r = 40.159; ρ = 1000 kg/m^3
Phantom section: Left Section

Test Date: 06-23-2014; Ambient Temp: 20.9°C; Tissue Temp: 22.0°C

Probe: ES3DV3 - SN3213; ConvF(4.99, 4.99, 4.99); Calibrated: 4/11/2014;
Sensor-Surface: 3mm (Mechanical Surface Detection)
Electronics: DAE4 Sn1364; Calibrated: 3/17/2014
Phantom: SAM Sub; Type: SAM 4.0; Serial: TP-1357
Measurement SW: DASY4, Version 4.7 (80); SEMCAD X Version 14.6.10 (7164)

Mode: GSM 1900, Left Head, Cheek, Mid.ch

Area Scan (8x12x1): Measurement grid: dx=15mm, dy=15mm
Zoom Scan (5x5x7)/Cube 0: Measurement grid: dx=8mm, dy=8mm, dz=5mm
Reference Value = 20.479 V/m; Power Drift = -0.14 dB
Peak SAR (extrapolated) = 1.02 W/kg
SAR(1 g) = 0.623 W/kg

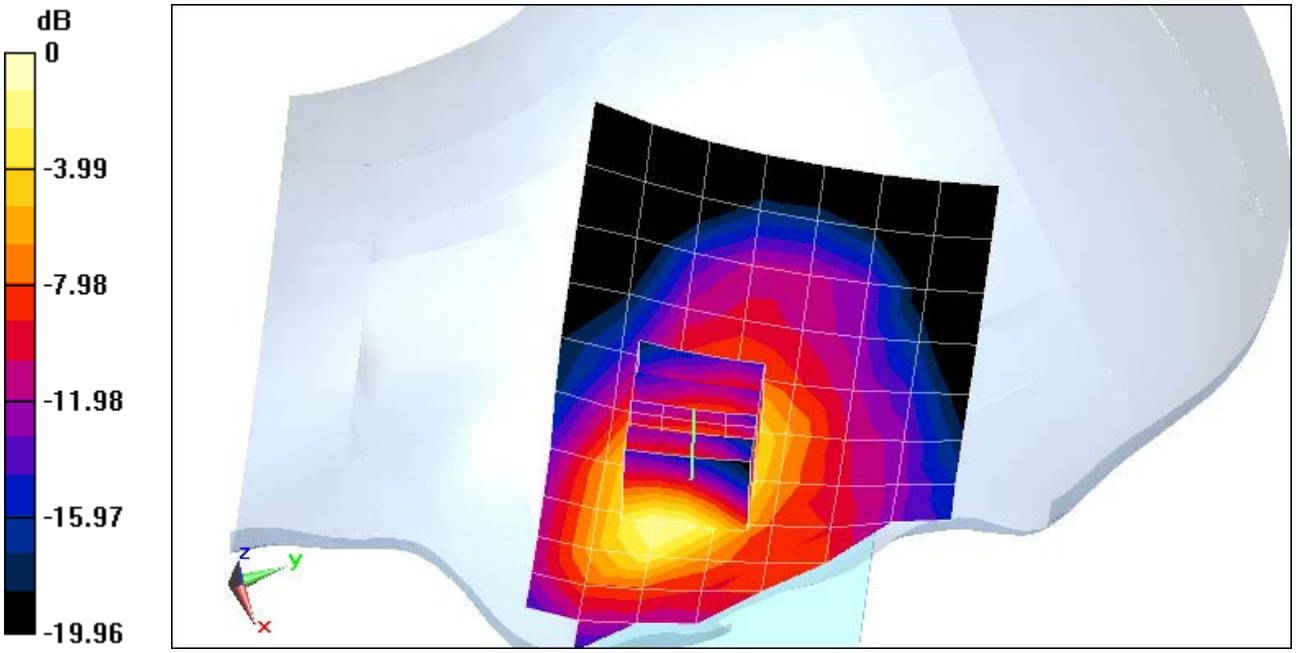

0 dB = 0.765 W/kg = -1.16 dBW/kg

PCTEST ENGINEERING LABORATORY, INC.

DUT: A3LSMG800H; Type: Portable Handset; Serial: FL-243-B

Communication System: UID 0, UMTS; Frequency: 836.6 MHz; Duty Cycle: 1:1
Medium: 835 Head Medium parameters used (interpolated):
f = 836.6 MHz; σ = 0.895 S/m; ε_r = 39.989; ρ = 1000 kg/m^3
Phantom section: Left Section

Test Date: 06-17-2014; Ambient Temp: 23.8°C; Tissue Temp: 23.5°C

Probe: ES3DV3 - SN3209; ConvF(6.23, 6.23, 6.23); Calibrated: 3/19/2014;
Sensor-Surface: 3mm (Mechanical Surface Detection)
Electronics: DAE4 Sn1334; Calibrated: 3/17/2014
Phantom: SAM front; Type: QD000P40CD; Serial: TP:1759
Measurement SW: DASY52, Version 52.8 (8); SEMCAD X Version 14.6.10 (7164)

Mode: UMTS 850, Left Head, Cheek, Mid.ch

Area Scan (8x12x1): Measurement grid: dx=15mm, dy=15mm
Zoom Scan (5x5x7)/Cube 0: Measurement grid: dx=8mm, dy=8mm, dz=5mm
Reference Value = 15.820 V/m; Power Drift = 0.06 dB
Peak SAR (extrapolated) = 0.277 W/kg
SAR(1 g) = 0.218 W/kg

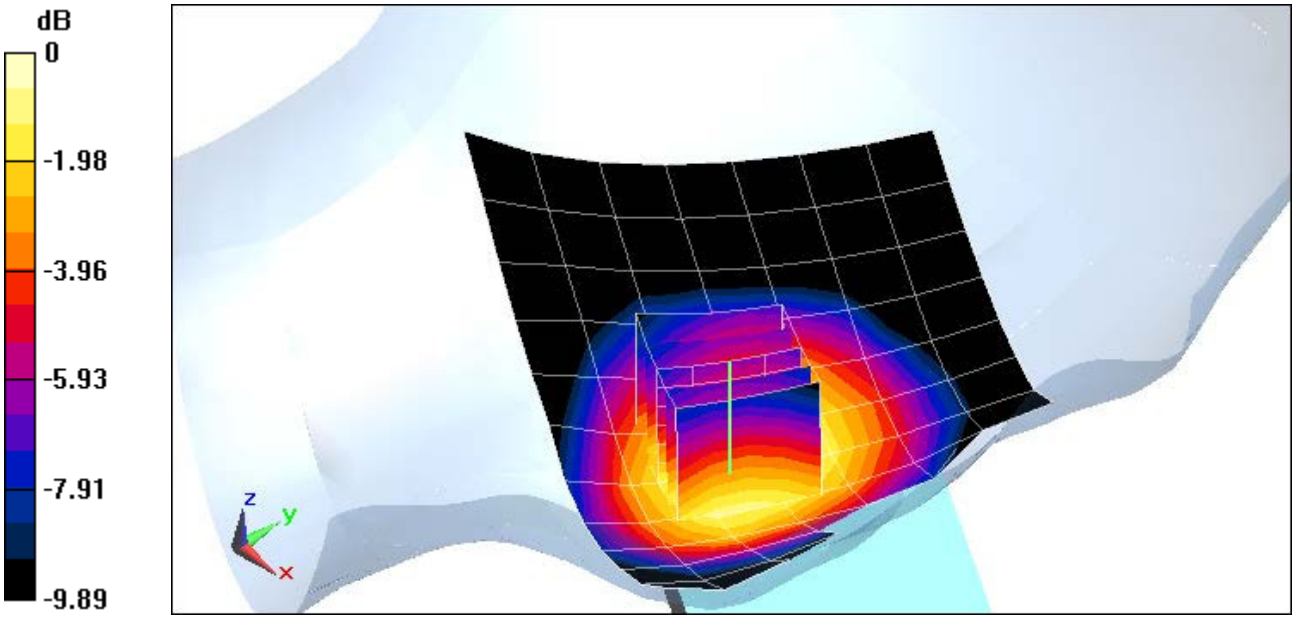

0 dB = 0.239 W/kg = -6.22 dBW/kg

PCTEST ENGINEERING LABORATORY, INC.

DUT: A3LSMG800H; Type: Portable Handset; Serial: FL-243-B

Communication System: UID 0, WCDMA1900; Frequency: 1880 MHz; Duty Cycle: 1:1
Medium: 1900 Head Medium parameters used:
f = 1880 MHz; σ = 1.421 S/m; ε_r = 40.159; ρ = 1000 kg/m^3
Phantom section: Left Section

Test Date: 06-23-2014; Ambient Temp: 20.9°C; Tissue Temp: 22.0°C

Probe: ES3DV3 - SN3213; ConvF(4.99, 4.99, 4.99); Calibrated: 4/11/2014;
Sensor-Surface: 3mm (Mechanical Surface Detection)
Electronics: DAE4 Sn1364; Calibrated: 3/17/2014
Phantom: SAM Sub; Type: SAM 4.0; Serial: TP-1357
Measurement SW: DASY4, Version 4.7 (80); SEMCAD X Version 14.6.10 (7164)

Mode: UMTS 1900, Left Head, Cheek, Mid.ch

Area Scan (8x12x1): Measurement grid: dx=15mm, dy=15mm
Zoom Scan (5x5x7)/Cube 0: Measurement grid: dx=8mm, dy=8mm, dz=5mm
Reference Value = 25.017 V/m; Power Drift = -0.12 dB
Peak SAR (extrapolated) = 1.43 W/kg
SAR(1 g) = 0.882 W/kg

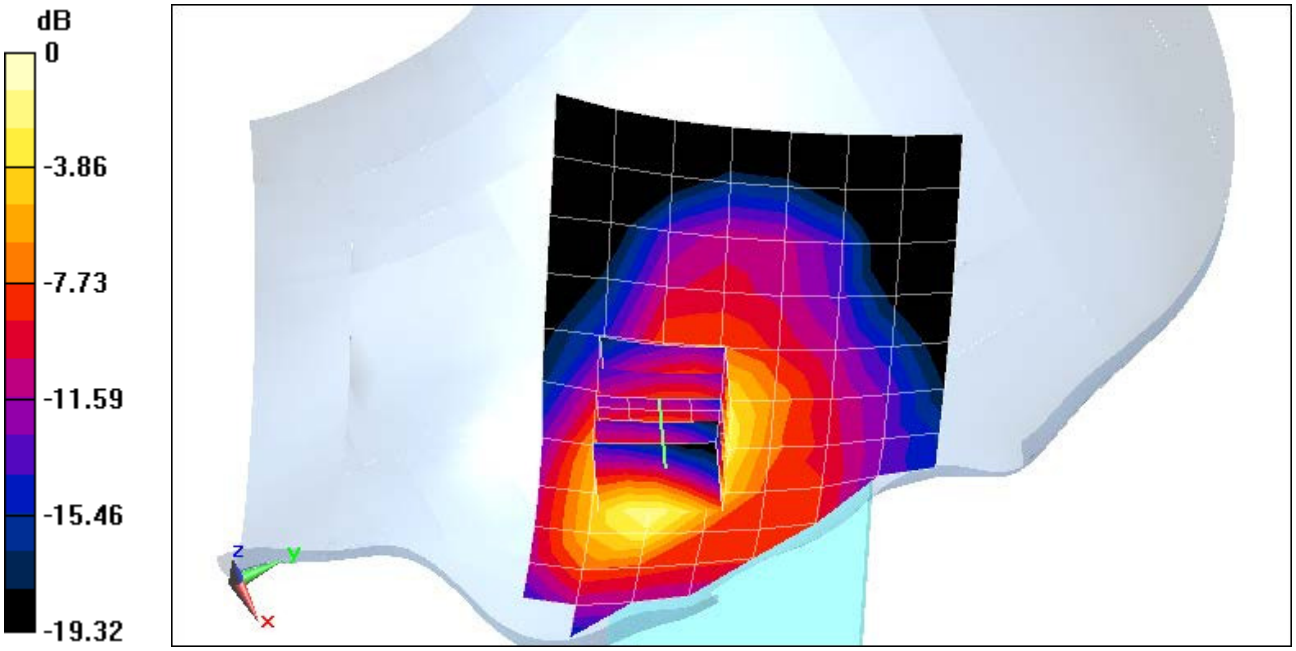

0 dB = 1.07 W/kg = 0.29 dBW/kg

PCTEST ENGINEERING LABORATORY, INC.

DUT: A3LSMG800H; Type: Portable Handset; Serial: FL-243-E

Communication System: UID 0, IEEE 802.11b; Frequency: 2412 MHz; Duty Cycle: 1:1
Medium: 2450 Head Medium parameters used (interpolated):
f = 2412 MHz; σ = 1.744 S/m; ε_r = 39.9; ρ = 1000 kg/m^3
Phantom section: Right Section

Test Date: 06-19-2014; Ambient Temp: 24.3°C; Tissue Temp: 23.7°C

Probe: ES3DV3 - SN3319; ConvF(4.45, 4.45, 4.45); Calibrated: 4/17/2014;
Sensor-Surface: 3mm (Mechanical Surface Detection)
Electronics: DAE4 Sn1368; Calibrated: 4/11/2014
Phantom: SAM; Type: QD000P40CD; Serial: TP:1758
Measurement SW: DASY52, Version 52.8 (8); SEMCAD X Version 14.6.10 (7164)

Mode: IEEE 802.11b, Right Head, Cheek, Ch 01, 1 Mbps

Area Scan (11x18x1): Measurement grid: dx=12mm, dy=12mm
Zoom Scan (7x7x7)/Cube 0: Measurement grid: dx=5mm, dy=5mm, dz=5mm
Reference Value = 17.801 V/m; Power Drift = -0.06 dB
Peak SAR (extrapolated) = 1.22 W/kg
SAR(1 g) = 0.509 W/kg

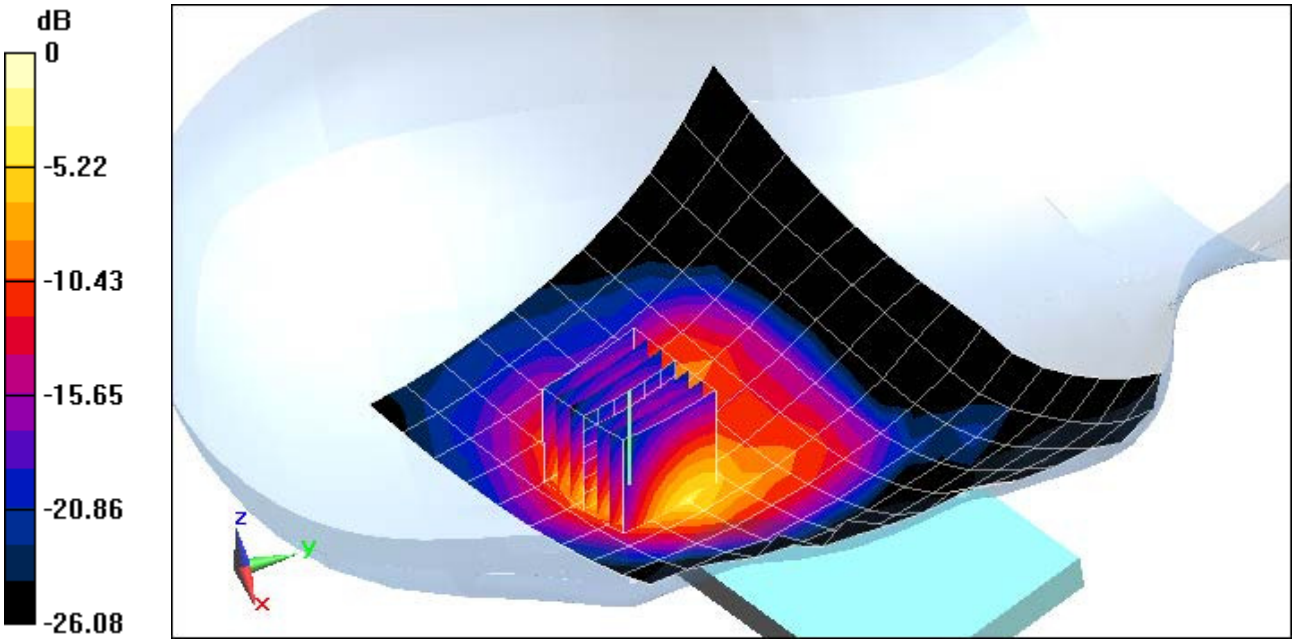

0 dB = 0.675 W/kg = -1.71 dBW/kg

PCTEST ENGINEERING LABORATORY, INC.

DUT: A3LSMG800H; Type: Portable Handset; Serial: FL-243-C

Communication System: UID 0, IEEE 802.11a; Frequency: 5765 MHz; Duty Cycle: 1:1
Medium: 5 GHz Head Medium parameters used:
f = 5765 MHz; σ = 5.203 S/m; ε_r = 36.917; ρ = 1000 kg/m^3
Phantom section: Right Section

Test Date: 06-19-2014; Ambient Temp: 24.5°C; Tissue Temp: 24.3°C

Probe: EX3DV4 - SN3914, ConvF(4.52, 4.52, 4.52); Calibrated: 10/23/2013;
Sensor-Surface: 1.4mm (Mechanical Surface Detection)
Electronics: DAE4 Sn1333; Calibrated: 11/19/2013
Phantom: SAM V5.0 Right; Type: QD000P40CD; Serial: 1647
Measurement SW: DASY52, Version 52.8 (8); SEMCAD X Version 14.6.10 (7164)

Mode: IEEE 802.11a, 5.8 GHz, Right Head, Cheek, Ch 153, 6 Mbps

Area Scan (13x22x1): Measurement grid: dx=10mm, dy=10mm
Zoom Scan (7x7x7)/Cube 0: Measurement grid: dx=4mm, dy=4mm, dz=1.4mm; Graded Ratio: 1.4
Reference Value = 3.641 V/m; Power Drift = 0.14 dB
Peak SAR (extrapolated) = 0.515 W/kg
SAR(1 g) = 0.102 W/kg

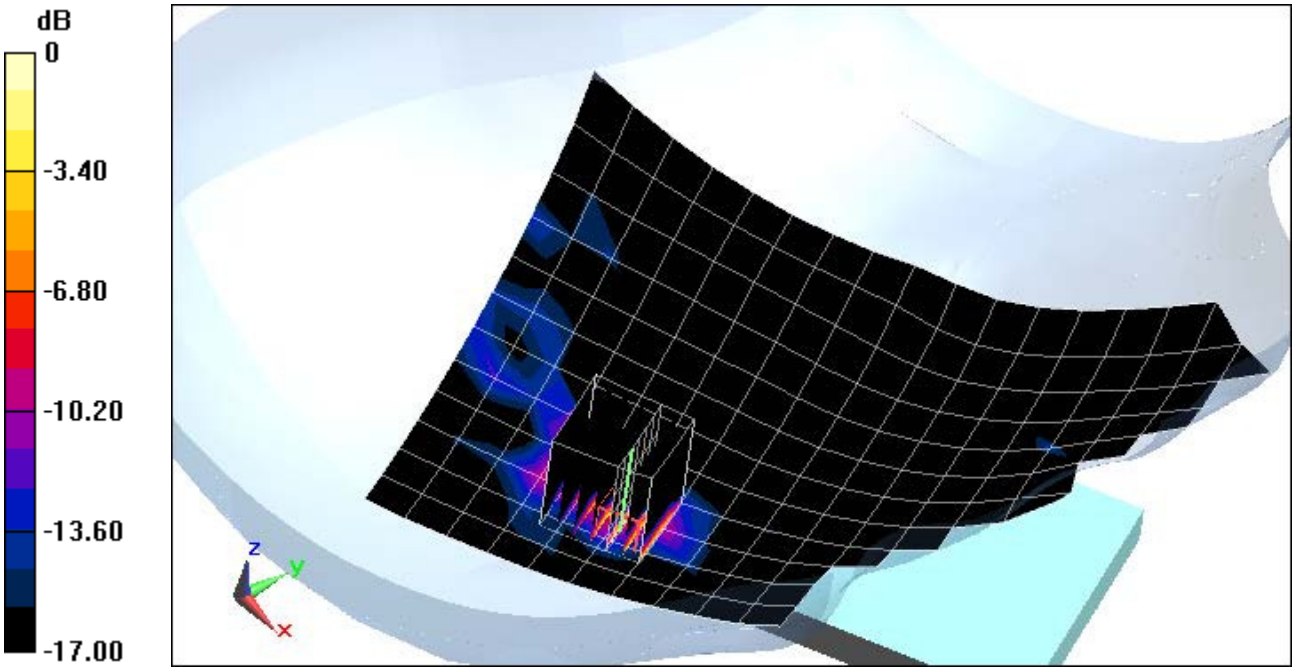

0 dB = 0.300 W/kg = -5.23 dBW/kg

PCTEST ENGINEERING LABORATORY, INC.

DUT: A3LSMG800H; Type: Portable Handset; Serial: FL-243-C

Communication System: UID 0, IEEE 802.11a; Frequency: 5260 MHz; Duty Cycle: 1:1
Medium: 5 GHz Head Medium parameters used:
f = 5260 MHz; σ = 4.695 S/m; ε_r = 37.519; ρ = 1000 kg/m^3
Phantom section: Right Section

Test Date: 06-19-2014; Ambient Temp: 24.4°C; Tissue Temp: 24.4°C

Probe: EX3DV4 - SN3914; ConvF(4.82, 4.82, 4.82); Calibrated: 10/23/2013;
Sensor-Surface: 1.4mm (Mechanical Surface Detection)
Electronics: DAE4 Sn1333; Calibrated: 11/19/2013
Phantom: SAM V5.0 Right; Type: QD000P40CD; Serial: 1647
Measurement SW: DASY52, Version 52.8 (8); SEMCAD X Version 14.6.10 (7164)

Mode: IEEE 802.11a, 5.3 GHz, Right Head, Cheek, Ch 52, 6 Mbps

Area Scan (13x22x1): Measurement grid: dx=10mm, dy=10mm
Zoom Scan (7x7x7)/Cube 0: Measurement grid: dx=4mm, dy=4mm, dz=1.4mm; Graded Ratio: 1.4
Reference Value = 3.286 V/m; Power Drift = -0.12 dB
Peak SAR (extrapolated) = 0.288 W/kg
SAR(1 g) = 0.057 W/kg

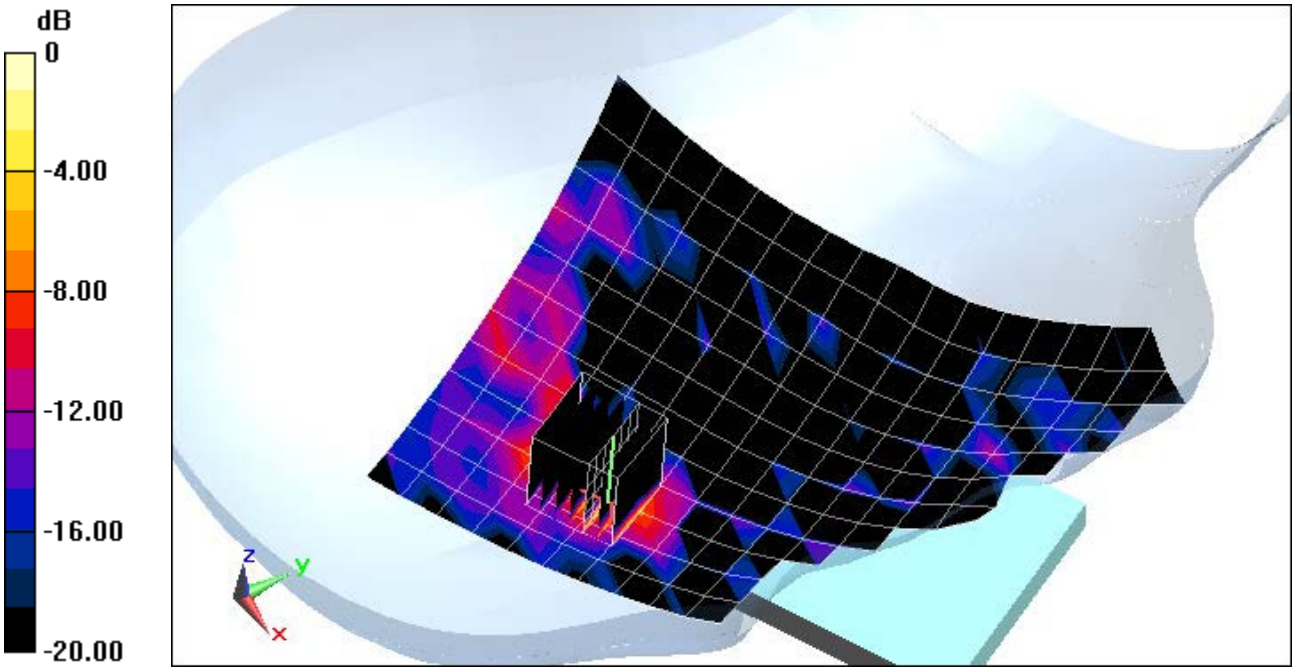

0 dB = 0.169 W/kg = -7.72 dBW/kg

PCTEST ENGINEERING LABORATORY, INC.

DUT: A3LSMG800H; Type: Portable Handset; Serial: FL-243-B

Communication System: UID 0, GSM850; Frequency: 836.6 MHz; Duty Cycle: 1:8.3
Medium: 835 Body Medium parameters used (interpolated):
f = 836.6 MHz; σ = 0.943 S/m; ε_r = 55.18; ρ = 1000 kg/m^3
Phantom section: Flat Section; Space: 1.0 cm

Test Date: 06-23-2014; Ambient Temp: 22.6°C; Tissue Temp: 22.1°C

Probe: ES3DV3 - SN3288; ConvF(6.27, 6.27, 6.27); Calibrated: 9/23/2013;
Sensor-Surface: 4mm (Mechanical Surface Detection)
Electronics: DAE4 Sn1323; Calibrated: 9/17/2013
Phantom: SAM with CRP; Type: SAM; Serial: TP1375
Measurement SW: DASY4, Version 4.7 (80); SEMCAD X Version 14.6.10 (7164)

Mode: GSM 850, Body SAR, Back side, Mid.ch

Area Scan (9x13x1): Measurement grid: dx=15mm, dy=15mm
Zoom Scan (5x5x7)/Cube 0: Measurement grid: dx=8mm, dy=8mm, dz=5mm
Reference Value = 21.107 V/m; Power Drift = 0.03 dB
Peak SAR (extrapolated) = 0.490 W/kg
SAR(1 g) = 0.395 W/kg

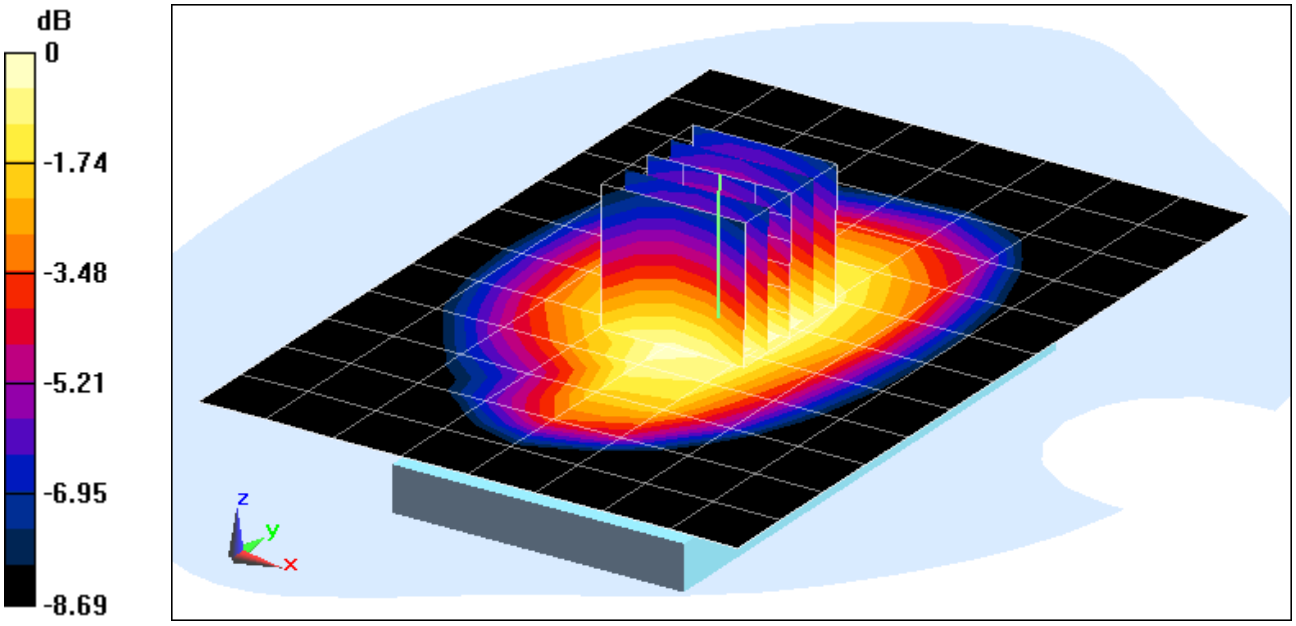

0 dB = 0.415 W/kg = -3.82 dBW/kg

PCTEST ENGINEERING LABORATORY, INC.

DUT: A3LSMG800H; Type: Portable Handset; Serial: FL-243-B

Communication System: UID 0, GSM850 GPRS; 3 Tx slots; Frequency: 836.6 MHz; Duty Cycle: 1:2.76
Medium: 835 Body Medium parameters used (interpolated):
f = 836.6 MHz; σ = 0.943 S/m; ε_r = 55.18; ρ = 1000 kg/m^3
Phantom section: Flat Section; Space: 1.0 cm

Test Date: 06-23-2014; Ambient Temp: 22.6°C; Tissue Temp: 22.1°C

Probe: ES3DV3 - SN3288; ConvF(6.27, 6.27, 6.27); Calibrated: 9/23/2013;
Sensor-Surface: 4mm (Mechanical Surface Detection)
Electronics: DAE4 Sn1323; Calibrated: 9/17/2013
Phantom: SAM with CRP; Type: SAM; Serial: TP1375
Measurement SW: DASY4, Version 4.7 (80); SEMCAD X Version 14.6.10 (7164)

Mode: GPRS 850, Body SAR, Back side, Mid.ch, 3 Tx Slots

Area Scan (9x13x1): Measurement grid: dx=15mm, dy=15mm
Zoom Scan (5x5x7)/Cube 0: Measurement grid: dx=8mm, dy=8mm, dz=5mm
Reference Value = 22.234 V/m; Power Drift = 0.00 dB
Peak SAR (extrapolated) = 0.545 W/kg
SAR(1 g) = 0.438 W/kg

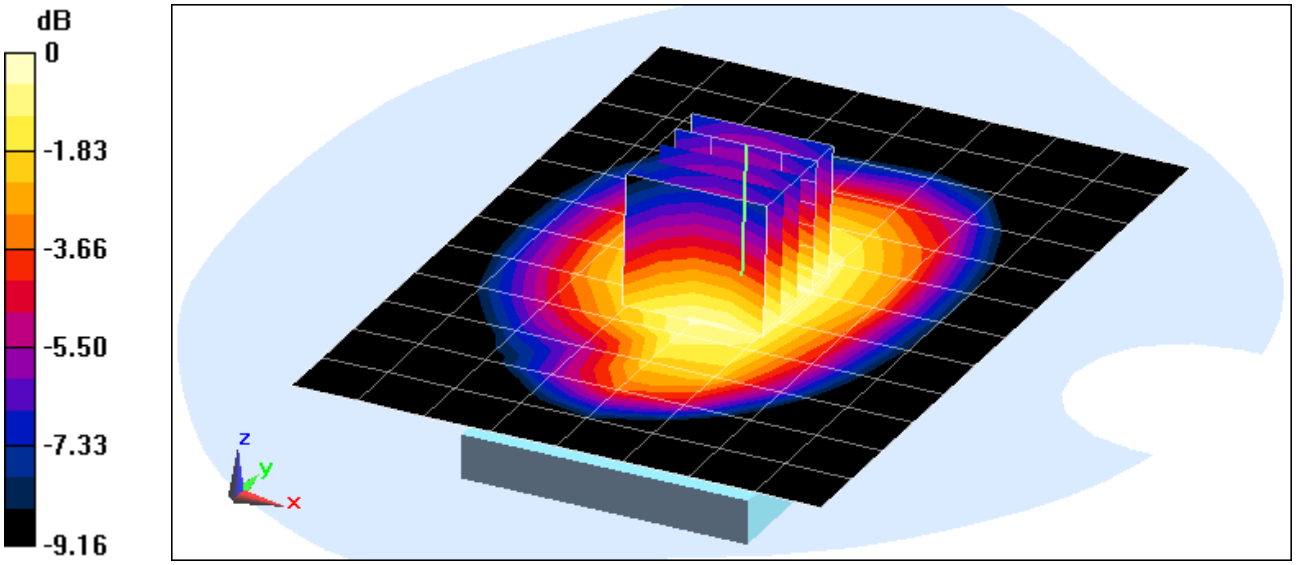

0 dB = 0.456 W/kg = -3.41 dBW/kg

PCTEST ENGINEERING LABORATORY, INC.

DUT: A3LSMG800H; Type: Portable Handset; Serial: FL-243-A

Communication System: UID 0, GSM1900; Frequency: 1880 MHz; Duty Cycle: 1:8.3
Medium: 1900 Body Medium parameters used:
f = 1880 MHz; σ = 1.481 S/m; ε_r = 53.465; ρ = 1000 kg/m^3
Phantom section: Flat Section; Space: 1.0 cm

Test Date: 06-19-2014; Ambient Temp: 23.2°C; Tissue Temp: 21.3°C

Probe: ES3DV3 - SN3288; ConvF(4.82, 4.82, 4.82); Calibrated: 9/23/2013;
Sensor-Surface: 4mm (Mechanical Surface Detection)
Electronics: DAE4 Sn1323; Calibrated: 9/17/2013
Phantom: SAM Sub Dasy B; Type: SAM 5.0; Serial: TP-1626
Measurement SW: DASY4, Version 4.7 (80); SEMCAD X Version 14.6.10 (7164)

Mode: GSM 1900, Body SAR, Back side, Mid.ch

Area Scan (9x15x1): Measurement grid: dx=15mm, dy=15mm
Zoom Scan (5x5x7)/Cube 0: Measurement grid: dx=8mm, dy=8mm, dz=5mm
Reference Value = 17.573 V/m; Power Drift = 0.05 dB
Peak SAR (extrapolated) = 0.691 W/kg
SAR(1 g) = 0.418 W/kg

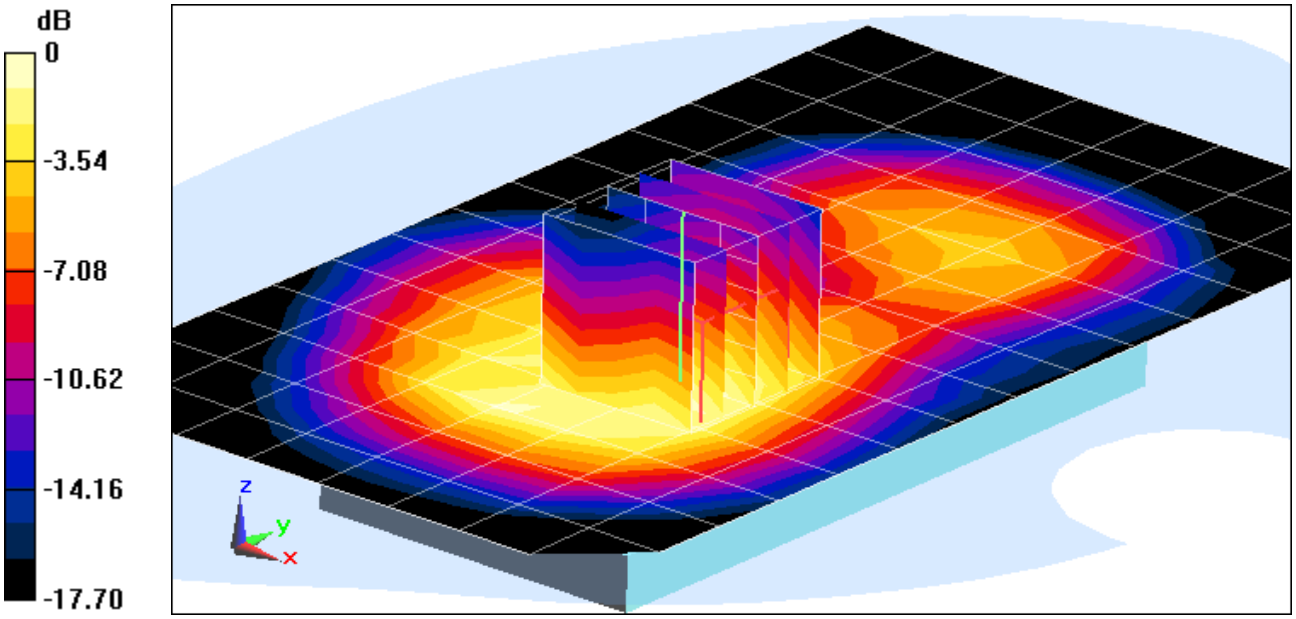

0 dB = 0.443 W/kg = -3.54 dBW/kg

PCTEST ENGINEERING LABORATORY, INC.

DUT: A3LSMG800H; Type: Portable Handset; Serial: FL-243-A

Communication System: UID 0, GSM1900 GPRS; 3 Tx slots; Frequency: 1880 MHz; Duty Cycle: 1:2.76
Medium: 1900 Body Medium parameters used:
f = 1880 MHz; σ = 1.481 S/m; ε_r = 53.465; ρ = 1000 kg/m^3
Phantom section: Flat Section; Space: 1.0 cm

Test Date: 06-19-2014; Ambient Temp: 23.2°C; Tissue Temp: 21.3°C

Probe: ES3DV3 - SN3288; ConvF(4.82, 4.82, 4.82); Calibrated: 9/23/2013;
Sensor-Surface: 4mm (Mechanical Surface Detection)
Electronics: DAE4 Sn1323; Calibrated: 9/17/2013
Phantom: SAM Sub Dasy B; Type: SAM 5.0; Serial: TP-1626
Measurement SW: DASY4, Version 4.7 (80); SEMCAD X Version 14.6.10 (7164)

Mode: GPRS 1900, Body SAR, Front side, Mid.ch, 3 Tx Slots

Area Scan (9x15x1): Measurement grid: dx=15mm, dy=15mm
Zoom Scan (5x5x7)/Cube 0: Measurement grid: dx=8mm, dy=8mm, dz=5mm
Reference Value = 18.578 V/m; Power Drift = 0.03 dB
Peak SAR (extrapolated) = 0.928 W/kg
SAR(1 g) = 0.568 W/kg

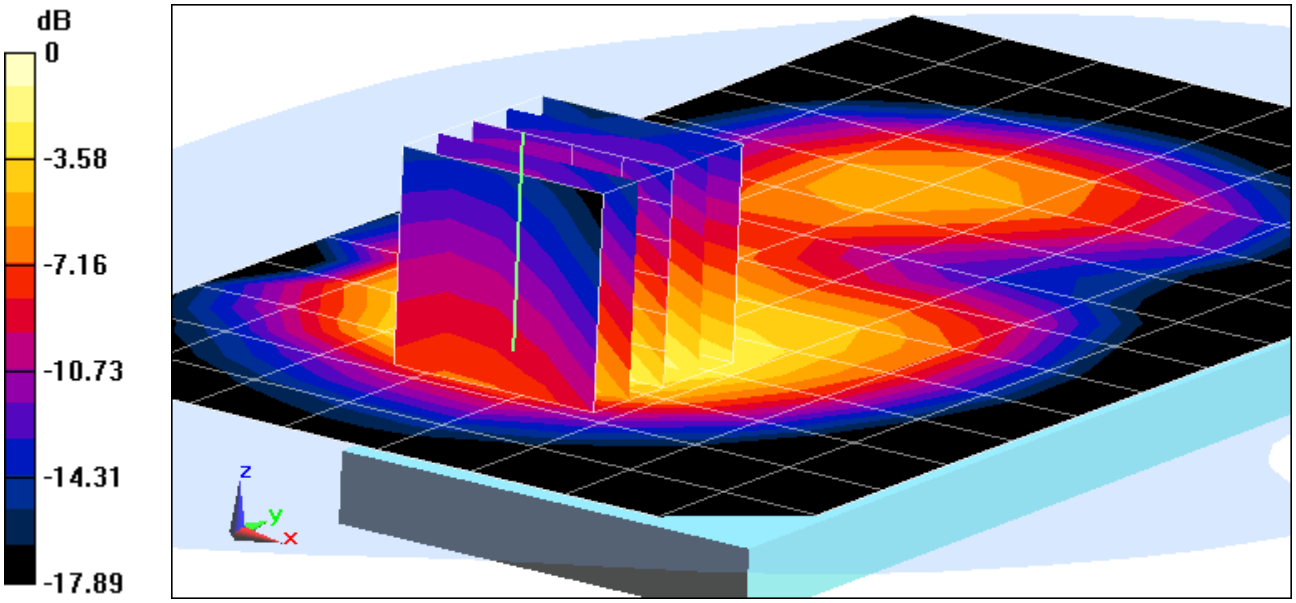

0 dB = 0.639 W/kg = -1.94 dBW/kg

PCTEST ENGINEERING LABORATORY, INC.

DUT: A3LSMG800H; Type: Portable Handset; Serial: FL-243-B

Communication System: UID 0, WCDMA850; Frequency: 836.6 MHz; Duty Cycle: 1:1
Medium: 835 Body Medium parameters used (interpolated):
f = 836.6 MHz; σ = 0.943 S/m; ε_r = 55.18; ρ = 1000 kg/m^3
Phantom section: Flat Section; Space: 1.0 cm

Test Date: 06-23-2014; Ambient Temp: 22.6°C; Tissue Temp: 22.1°C

Probe: ES3DV3 - SN3288; ConvF(6.27, 6.27, 6.27); Calibrated: 9/23/2013;
Sensor-Surface: 4mm (Mechanical Surface Detection)
Electronics: DAE4 Sn1323; Calibrated: 9/17/2013
Phantom: SAM with CRP; Type: SAM; Serial: TP1375
Measurement SW: DASY4, Version 4.7 (80); SEMCAD X Version 14.6.10 (7164)

Mode: UMTS 850, Body SAR, Back side, Mid.ch

Area Scan (9x13x1): Measurement grid: dx=15mm, dy=15mm
Zoom Scan (5x5x7)/Cube 0: Measurement grid: dx=8mm, dy=8mm, dz=5mm
Reference Value = 18.702 V/m; Power Drift = 0.01 dB
Peak SAR (extrapolated) = 0.390 W/kg
SAR(1 g) = 0.313 W/kg

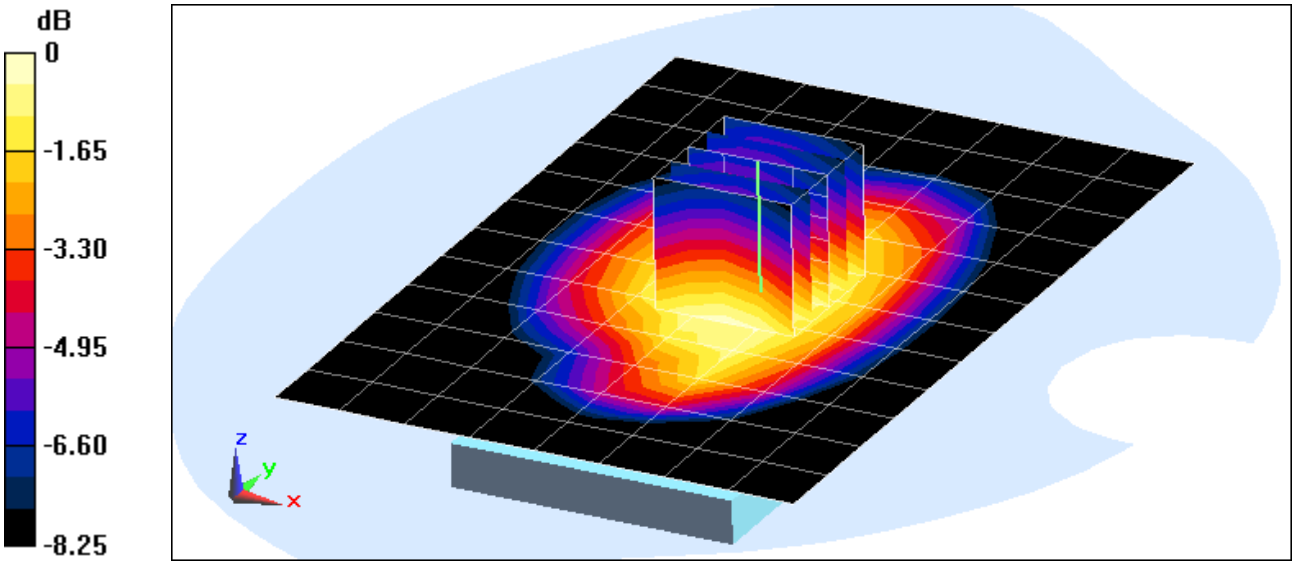

0 dB = 0.327 W/kg = -4.85 dBW/kg

PCTEST ENGINEERING LABORATORY, INC.

DUT: A3LSMG800H; Type: Portable Handset; Serial: FL-243-A

Communication System: UID 0, WCDMA1900; Frequency: 1880 MHz; Duty Cycle: 1:1
Medium: 1900 Body Medium parameters used:
f = 1880 MHz; σ = 1.481 S/m; ε_r = 53.465; ρ = 1000 kg/m^3
Phantom section: Flat Section; Space: 1.0 cm

Test Date: 06-19-2014; Ambient Temp: 23.2°C; Tissue Temp: 21.3°C

Probe: ES3DV3 - SN3288; ConvF(4.82, 4.82, 4.82); Calibrated: 9/23/2013;
Sensor-Surface: 4mm (Mechanical Surface Detection)
Electronics: DAE4 Sn1323; Calibrated: 9/17/2013
Phantom: SAM Sub Dasy B; Type: SAM 5.0; Serial: TP-1626
Measurement SW: DASY4, Version 4.7 (80); SEMCAD X Version 14.6.10 (7164)

Mode: UMTS 1900, Body SAR, Back side, Mid.ch

Area Scan (9x15x1): Measurement grid: dx=15mm, dy=15mm
Zoom Scan (5x5x7)/Cube 0: Measurement grid: dx=8mm, dy=8mm, dz=5mm
Reference Value = 20.989 V/m; Power Drift = 0.00 dB
Peak SAR (extrapolated) = 0.967 W/kg
SAR(1 g) = 0.594 W/kg

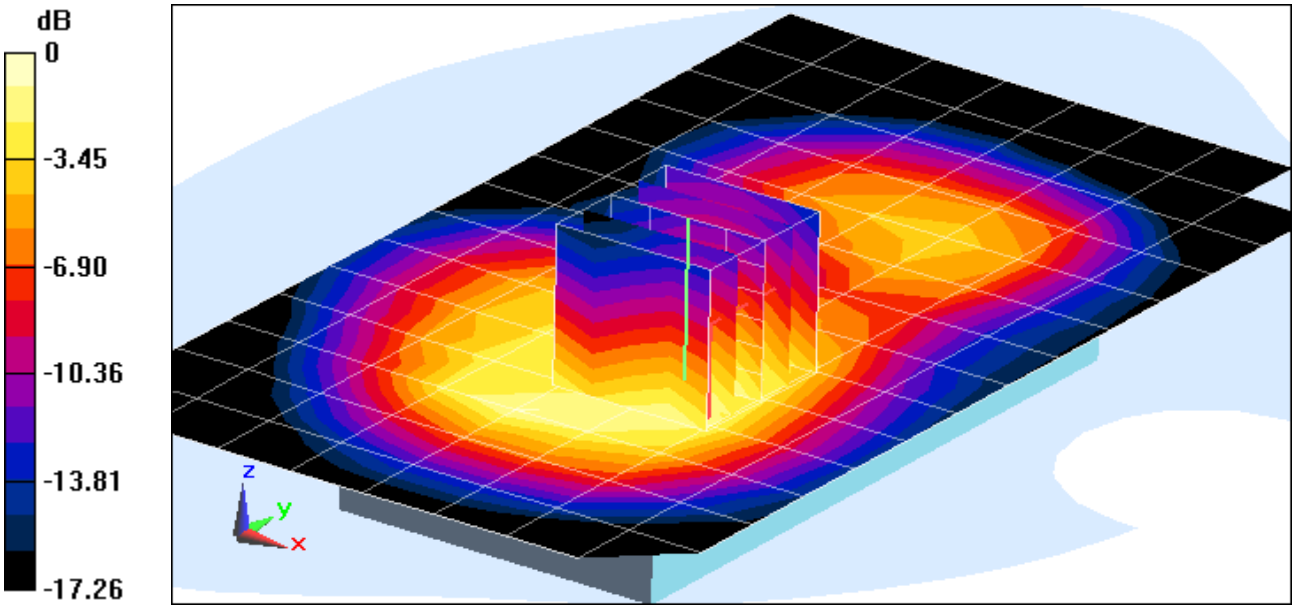

0 dB = 0.640 W/kg = -1.94 dBW/kg

PCTEST ENGINEERING LABORATORY, INC.

DUT: A3LSMG800H; Type: Portable Handset; Serial: FL-243-A

Communication System: UID 0, WCDMA1900; Frequency: 1880 MHz; Duty Cycle: 1:1
Medium: 1900 Body Medium parameters used:
f = 1880 MHz; σ = 1.481 S/m; ε_r = 53.465; ρ = 1000 kg/m^3
Phantom section: Flat Section; Space: 1.0 cm

Test Date: 06-19-2014; Ambient Temp: 23.2°C; Tissue Temp: 21.3°C

Probe: ES3DV3 - SN3288; ConvF(4.82, 4.82, 4.82); Calibrated: 9/23/2013;
Sensor-Surface: 4mm (Mechanical Surface Detection)
Electronics: DAE4 Sn1323; Calibrated: 9/17/2013
Phantom: SAM Sub Dasy B; Type: SAM 5.0; Serial: TP-1626
Measurement SW: DASY4, Version 4.7 (80); SEMCAD X Version 14.6.10 (7164)

Mode: UMTS 1900, Body SAR, Front side, Mid.ch

Area Scan (9x15x1): Measurement grid: dx=15mm, dy=15mm
Zoom Scan (5x5x7)/Cube 0: Measurement grid: dx=8mm, dy=8mm, dz=5mm
Reference Value = 23.653 V/m; Power Drift = 0.00 dB
Peak SAR (extrapolated) = 1.42 W/kg
SAR(1 g) = 0.871 W/kg

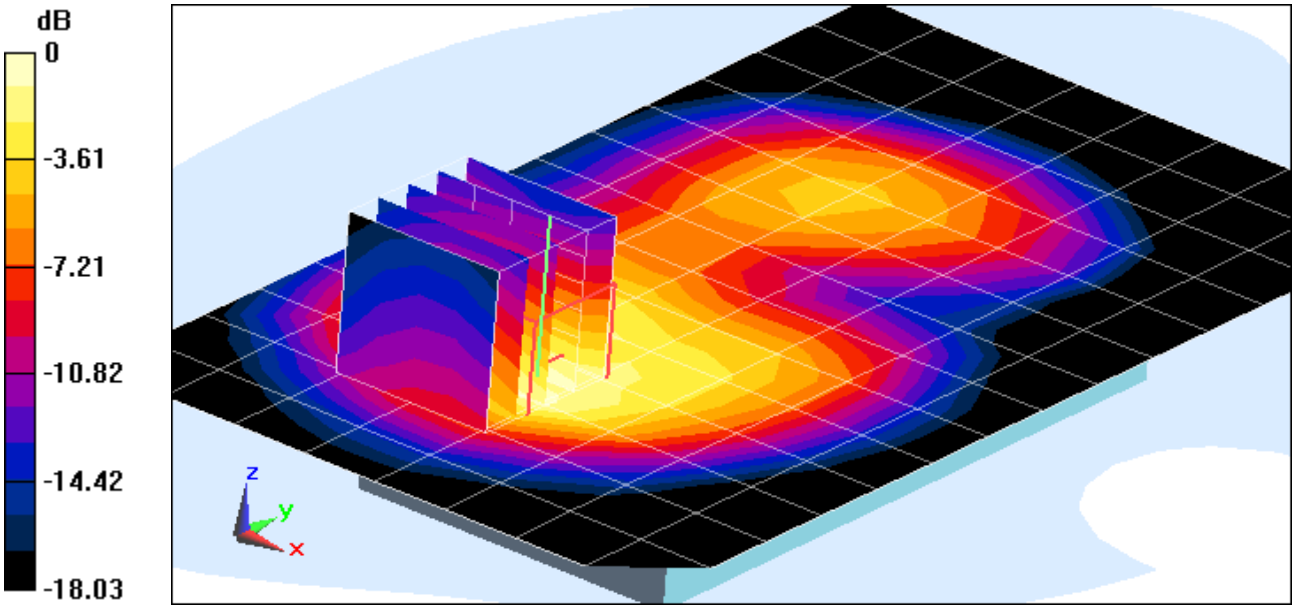

0 dB = 0.951 W/kg = -0.22 dBW/kg

PCTEST ENGINEERING LABORATORY, INC.

DUT: A3LSMG800H; Type: Portable Handset; Serial: FL-243-B

Communication System: UID 0, IEEE 802.11b; Frequency: 2412 MHz; Duty Cycle: 1:1
Medium: 2450 Body Medium parameters used (interpolated):
f = 2412 MHz; σ = 1.971 S/m; ε_r = 51.231; ρ = 1000 kg/m^3
Phantom section: Flat Section; Space: 1.0 cm

Test Date: 06-17-2014; Ambient Temp: 23.6°C; Tissue Temp: 22.9°C

Probe: ES3DV3 - SN3258; ConvF(4.14, 4.14, 4.14); Calibrated: 2/25/2014;
Sensor-Surface: 3mm (Mechanical Surface Detection)
Electronics: DAE4 Sn665; Calibrated: 2/26/2014
Phantom: ELI v5.0; Type: QDOVA002AA; Serial: TP-1158
Measurement SW: DASY52, Version 52.8 (8); SEMCAD X Version 14.6.10 (7164)

Mode: IEEE 802.11b, Body SAR, Ch 01, 1 Mbps, Back Side

Area Scan (10x16x1): Measurement grid: dx=12mm, dy=12mm
Zoom Scan (7x7x7)/Cube 0: Measurement grid: dx=5mm, dy=5mm, dz=5mm
Reference Value = 9.376 V/m; Power Drift = 0.03 dB
Peak SAR (extrapolated) = 0.347 W/kg
SAR(1 g) = 0.156 W/kg

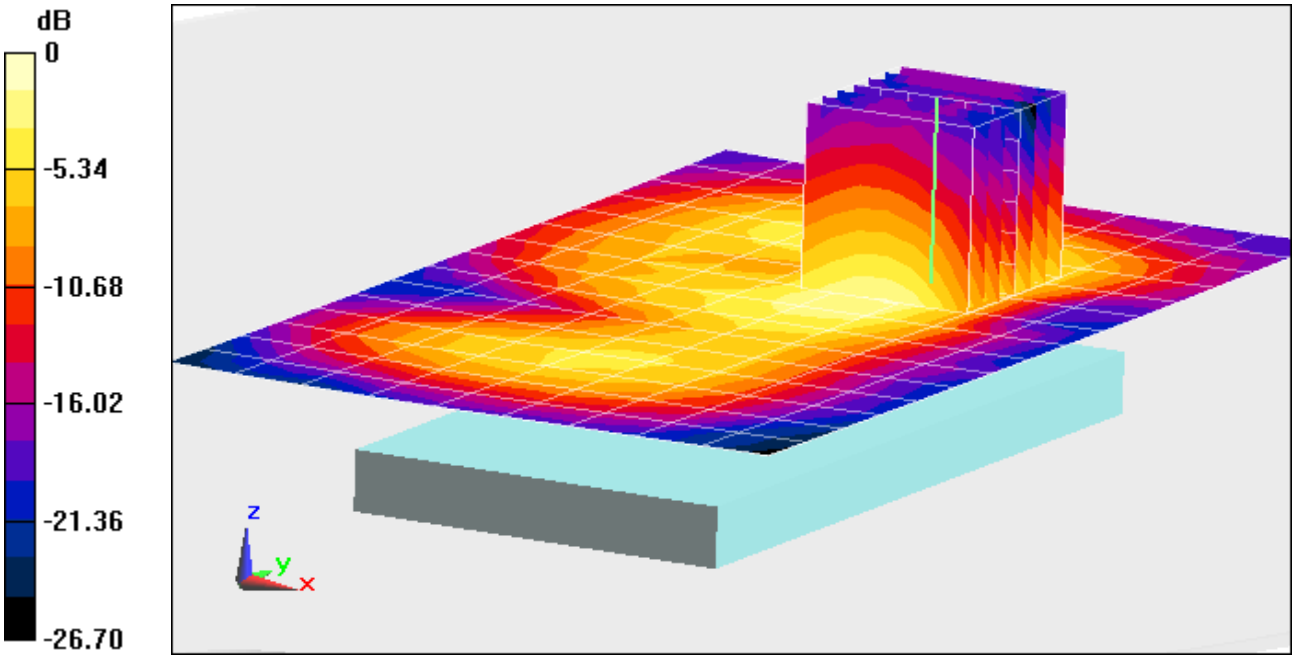

0 dB = 0.205 W/kg = -6.88 dBW/kg

PCTEST ENGINEERING LABORATORY, INC.

DUT: A3LSMG800H; Type: Portable Handset; Serial: FL-243-B

Communication System: UID 0, IEEE 802.11a 5.2-5.8 GHz Band; Frequency: 5765 MHz; Duty Cycle:1:1
Medium: 5 GHz Body Medium parameters used:
f = 5765 MHz; σ = 6.234 S/m; ε_r = 46.367; ρ = 1000 kg/m^3
Phantom section: Flat Section; Space: 1.0 cm

Test Date: 06-23-2014; Ambient Temp: 22.6°C; Tissue Temp: 22.8°C

Probe: EX3DV4 - SN3920; ConvF(4, 4, 4); Calibrated: 12/18/2013;
Sensor-Surface: 1.4mm (Mechanical Surface Detection)
Electronics: DAE4 Sn649; Calibrated: 12/12/2013
Phantom: SAM Sub; Type: SAM 4.0; Serial: TP-1357
Measurement SW: DASY4, Version 4.7 (80); SEMCAD X Version 14.6.10 (7164)

Mode: IEEE 802.11a, 5.8 GHz, Body SAR, Ch 153, 6 Mbps, Back Side

Area Scan (11x18x1): Measurement grid: dx=10mm, dy=10mm
Zoom Scan (8x8x7)/Cube 0: Measurement grid: dx=4mm, dy=4mm, dz=1.4mm; Graded Ratio: 1.4
Reference Value = 4.423 V/m; Power Drift = 0.13 dB
Peak SAR (extrapolated) = 0.547 W/kg
SAR(1 g) = 0.120 W/kg

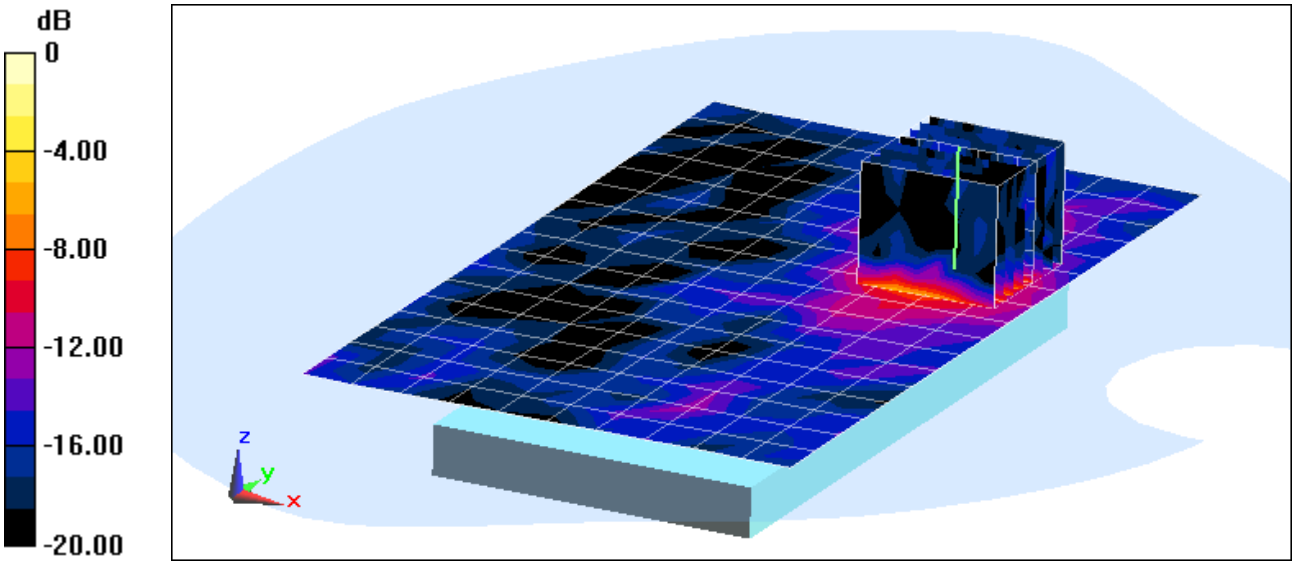

0 dB = 0.286 W/kg = -5.44 dBW/kg

PCTEST ENGINEERING LABORATORY, INC.

DUT: A3LSMG800H; Type: Portable Handset; Serial: FL-243-B

Communication System: UID 0, IEEE 802.11a 5.2-5.8 GHz Band; Frequency: 5260 MHz; Duty Cycle: 1:1
Medium: 5 GHz Body Medium parameters used:
f = 5260 MHz; σ = 5.557 S/m; ε_r = 47.241; ρ = 1000 kg/m^3
Phantom section: Flat Section; Space: 1.0 cm

Test Date: 06-23-2014; Ambient Temp: 22.5°C; Tissue Temp: 23.0°C

Probe: EX3DV4 - SN3920; ConvF(4.11, 4.11, 4.11); Calibrated: 12/18/2013;
Sensor-Surface: 1.4mm (Mechanical Surface Detection)
Electronics: DAE4 Sn649; Calibrated: 12/12/2013
Phantom: SAM Sub; Type: SAM 4.0; Serial: TP-1357
Measurement SW: DASY4, Version 4.7 (80); SEMCAD X Version 14.6.10 (7164)

Mode: IEEE 802.11a, 5.3 GHz, Body SAR, Ch 52, 6 Mbps, Back Side

Area Scan (11x18x1): Measurement grid: dx=10mm, dy=10mm
Zoom Scan (8x8x7)/Cube 0: Measurement grid: dx=4mm, dy=4mm, dz=1.4mm; Graded Ratio: 1.4
Reference Value = 4.225 V/m; Power Drift = 0.14 dB
Peak SAR (extrapolated) = 0.375 W/kg
SAR(1 g) = 0.098 W/kg

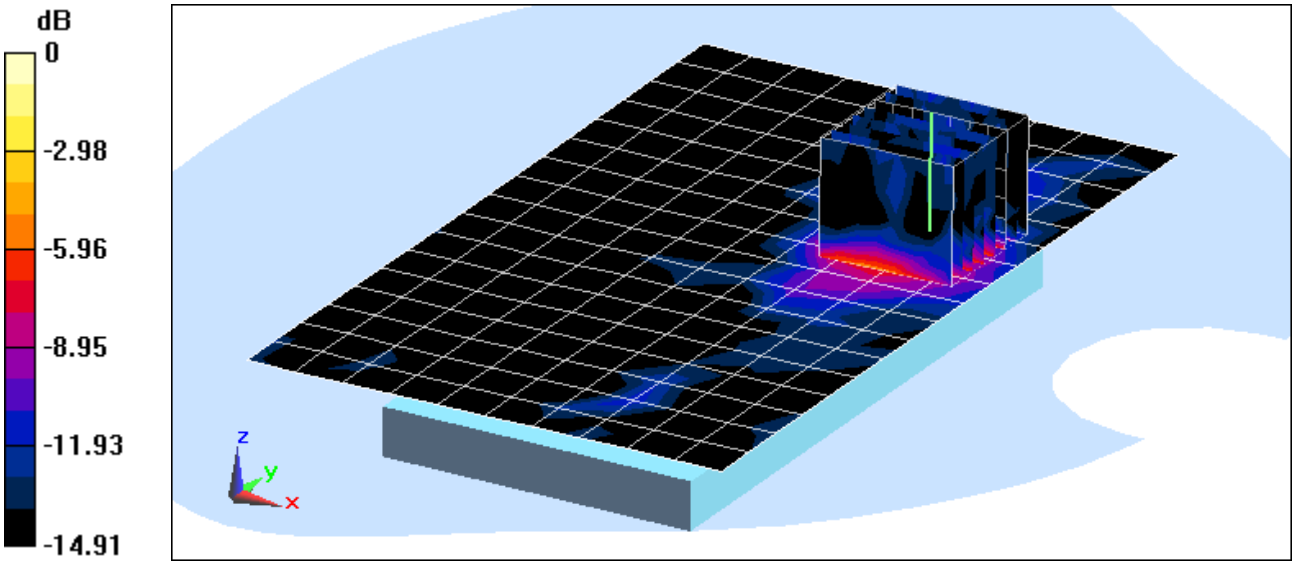

0 dB = 0.215 W/kg = -6.68 dBW/kg

APPENDIX B: SYSTEM VERIFICATION

© 2014 PCTEST Engineering Laboratory, Inc.

PCTEST ENGINEERING LABORATORY, INC.

DUT: Dipole 835 MHz; Type: D835V2; Serial: 4d119

Communication System: UID 0, CW; Frequency: 835 MHz; Duty Cycle: 1:1
Medium: 835 Head Medium parameters used:
f = 835 MHz; σ = 0.893 S/m; ε_r = 40.006; ρ = 1000 kg/m^3
Phantom section: Flat Section; Space: 1.5 cm

Test Date: 06-17-2014; Ambient Temp: 23.8°C; Tissue Temp: 23.5°C

Probe: ES3DV3 - SN3209; ConvF(6.23, 6.23, 6.23); Calibrated: 3/19/2014;
Sensor-Surface: 3mm (Mechanical Surface Detection)
Electronics: DAE4 Sn1334; Calibrated: 3/17/2014
Phantom: SAM front; Type: QD000P40CD; Serial: TP:1759
Measurement SW: DASY52, Version 52.8 (8); SEMCAD X Version 14.6.10 (7164)

835 MHz System Verification

Area Scan (7x14x1): Measurement grid: dx=15mm, dy=15mm
Zoom Scan (5x5x7)/Cube 0: Measurement grid: dx=8mm, dy=8mm, dz=5mm
Input Power = 20 dBm (100 mW)
Peak SAR (extrapolated) = 1.50 W/kg
SAR(1 g) = 1 W/kg
Deviation = 8.46%

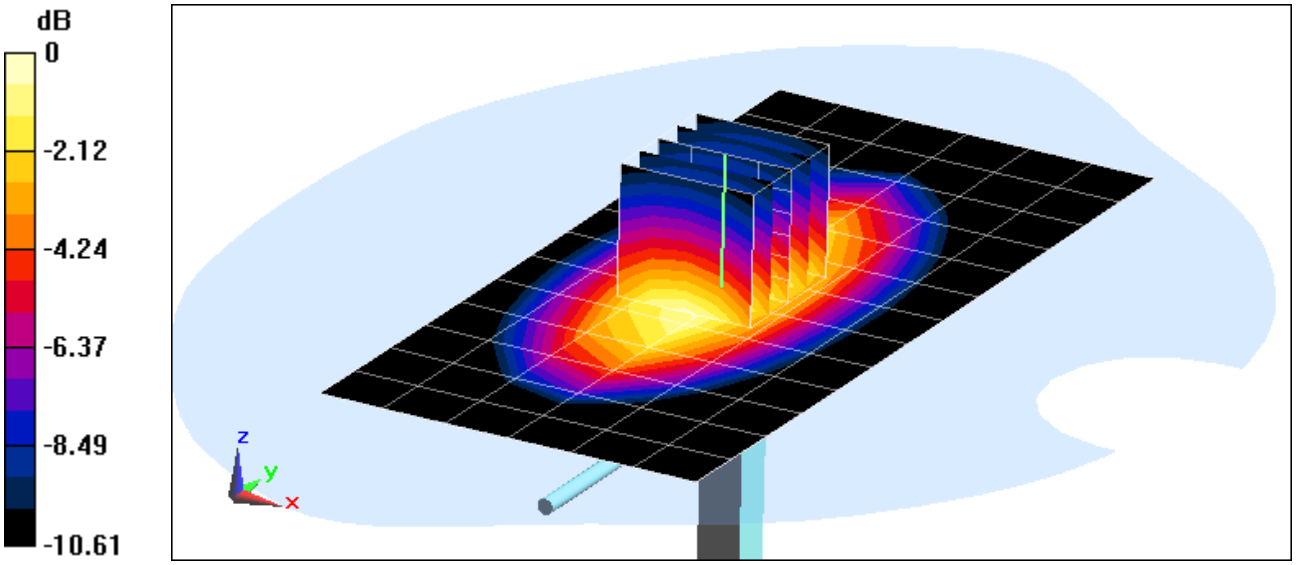

0 dB = 1.17 W/kg = 0.68 dBW/kg

PCTEST ENGINEERING LABORATORY, INC.

DUT: SAR Dipole 1900 MHz; Type: D1900V2; Serial: 5d148

Communication System: UID 0, CW; Frequency: 1900 MHz; Duty Cycle: 1:1
Medium: 1900 Head Medium parameters used (interpolated):
f = 1900 MHz; σ = 1.442 S/m; ε_r = 40.064; ρ = 1000 kg/m^3
Phantom section: Flat Section, Space: 1.0 cm

Test Date: 06-23-2014; Ambient Temp: 20.9°C; Tissue Temp: 22.0°C

Probe: ES3DV3 - SN3213; ConvF(4.99, 4.99, 4.99); Calibrated: 4/11/2014;
Sensor-Surface: 3mm (Mechanical Surface Detection)
Electronics: DAE4 Sn1364; Calibrated: 3/17/2014
Phantom: SAM Sub; Type: SAM 4.0; Serial: TP-1357
Measurement SW: DASY4, Version 4.7 (80); SEMCAD X Version 14.6.10 (7164)

1900MHz System Verification

Area Scan (5x7x1): Measurement grid: dx=15mm, dy=15mm
Zoom Scan (5x5x7)/Cube 0: Measurement grid: dx=8mm, dy=8mm, dz=5mm
Input Power = 20 dBm (100 mW)
Peak SAR (extrapolated) = 6.91 W/kg
SAR(1 g) = 3.78 W/kg
Deviation = -7.13%

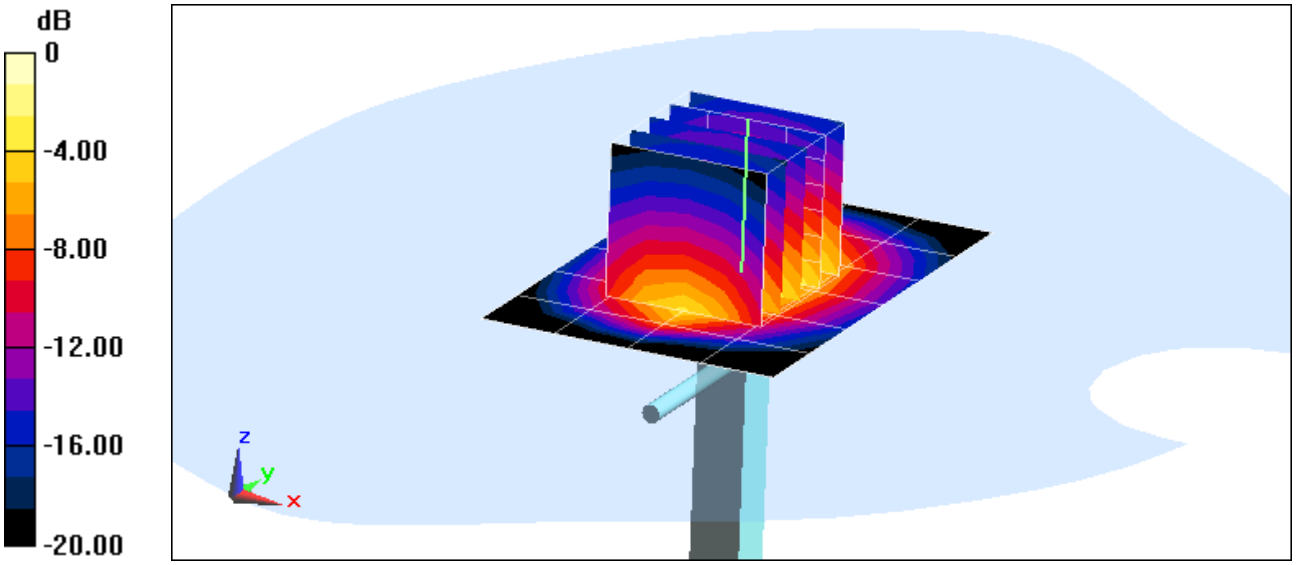

0 dB = 4.76 W/kg = 6.78 dBW/kg

PCTEST ENGINEERING LABORATORY, INC.

DUT: Dipole 2450 MHz; Type: D2450V2; Serial: 719

Communication System: UID 0, CW; Frequency: 2450 MHz;Duty Cycle: 1:1
Medium: 2450 Head Medium parameters used:
f = 2450 MHz; σ = 1.788 S/m; ε_r = 39.777; ρ = 1000 kg/m^3
Phantom section: Flat Section; Space: 1.0 cm

Test Date: 06-19-2014; Ambient Temp: 24.3°C; Tissue Temp: 23.7°C

Probe: ES3DV3 - SN3319; ConvF(4.45, 4.45, 4.45); Calibrated: 4/17/2014;
Sensor-Surface: 3mm (Mechanical Surface Detection)
Electronics: DAE4 Sn1368; Calibrated: 4/11/2014
Phantom: SAM; Type: QD000P40CD; Serial: TP:1758
Measurement SW: DASY52, Version 52.8 (8); SEMCAD X Version 14.6.10 (7164)

2450 MHz System Verification

Area Scan (8x9x1): Measurement grid: dx=12mm, dy=12mm
Zoom Scan (7x7x7)/Cube 0: Measurement grid: dx=5mm, dy=5mm, dz=5mm
Input Power = 20 dBm (100 mW)
Peak SAR (extrapolated) = 10.6 W/kg
SAR(1 g) = 5.22 W/kg
Deviation = -1.88%

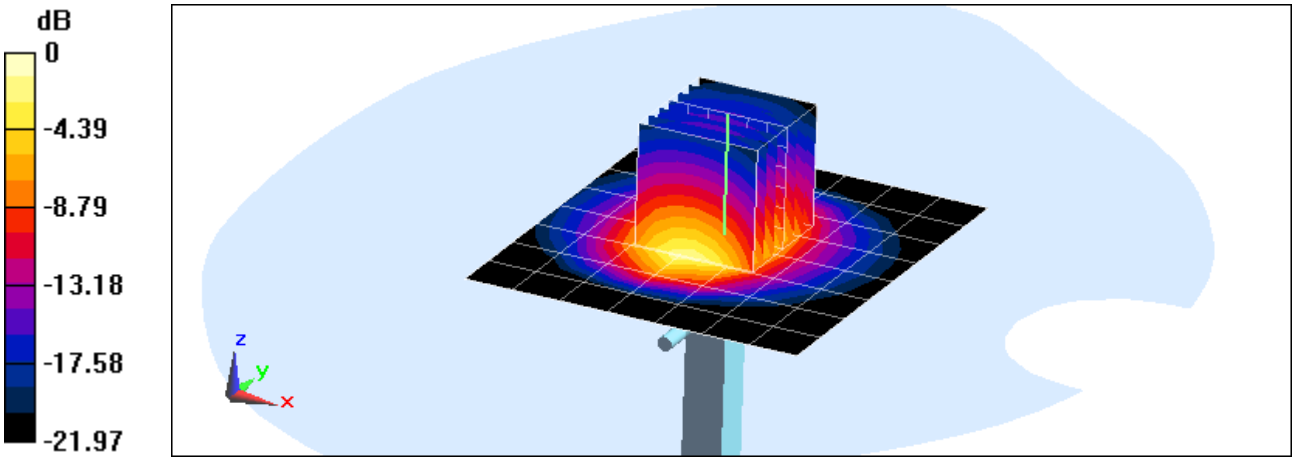

0 dB = 6.69 W/kg = 8.25 dBW/kg

PCTEST ENGINEERING LABORATORY, INC.

DUT: Dipole 5200 MHz; Type: D5GHzV2; Serial: 1057

Communication System: UID 0, CW; Frequency: 5200 MHz; Duty Cycle: 1:1
Medium: 5 GHz Head Medium parameters used:
f = 5200 MHz; σ = 4.605 S/m; ε_r = 37.601; ρ = 1000 kg/m^3
Phantom section: Flat Section; Space: 1.0 cm

Test Date: 06-19-2014; Ambient Temp: 24.5°C; Tissue Temp: 24.4°C

Probe: EX3DV4 - SN3914; ConvF(4.99, 4.99, 4.99); Calibrated: 10/23/2013;
Sensor-Surface: 1.4mm (Mechanical Surface Detection)
Electronics: DAE4 Sn1333; Calibrated: 11/19/2013
Phantom: SAM V5.0 Right; Type: QD000P40CD; Serial: 1647
Measurement SW: DASY52, Version 52.8 (8); SEMCAD X Version 14.6.10 (7164)

5200 MHz System Verification

Area Scan (7x7x1): Measurement grid: dx=10mm, dy=10mm
Zoom Scan (7x7x7)/Cube 0: Measurement grid: dx=4mm, dy=4mm, dz=1.4mm; Graded Ratio: 1.4
Input Power = 20 dBm (100 mW)
Peak SAR (extrapolated) = 31.4 W/kg
SAR(1 g) = 7.51 W/kg
Deviation = -3.72%

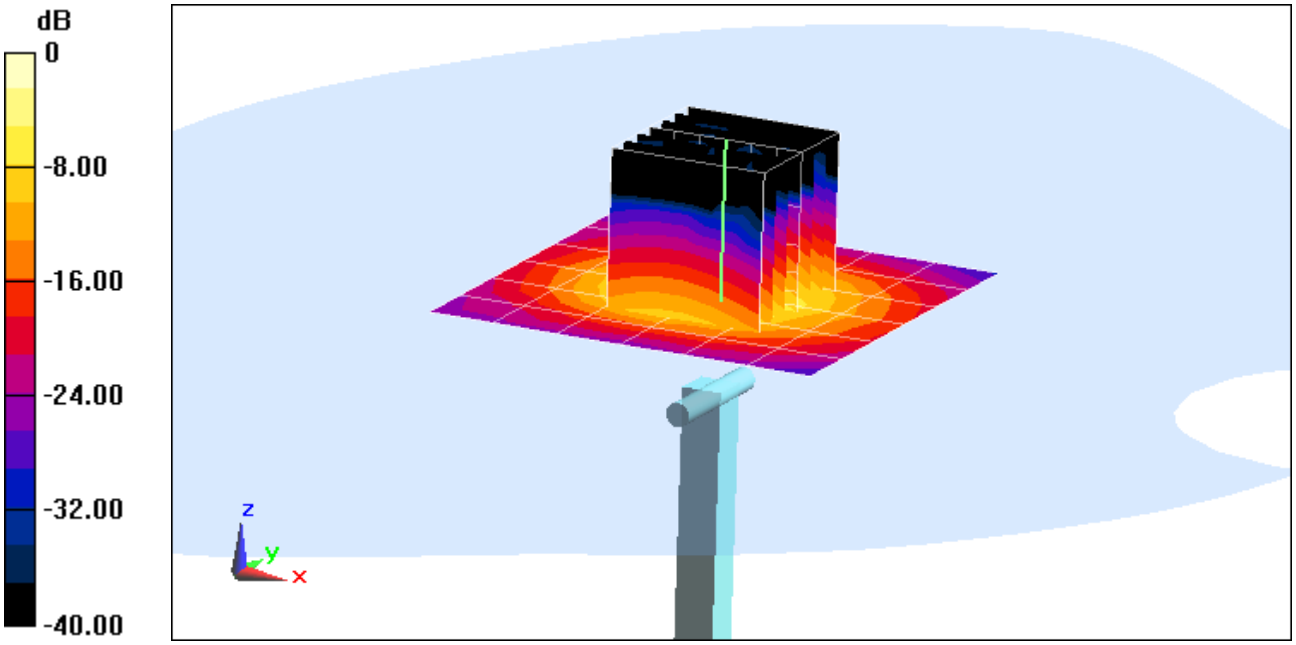

0 dB = 17.2 W/kg = 12.36 dBW/kg

PCTEST ENGINEERING LABORATORY, INC.

DUT: Dipole 5300 MHz; Type: D5GHzV2; Serial: 1057

Communication System: UID 0, CW; Frequency: 5300 MHz; Duty Cycle: 1:1
Medium: 5 GHz Head Medium parameters used:
f = 5300 MHz; σ = 4.709 S/m; ε_r = 37.469; ρ = 1000 kg/m^3
Phantom section: Flat Section; Space: 1.0 cm

Test Date: 06-19-2014; Ambient Temp: 24.4°C; Tissue Temp: 24.4°C

Probe: EX3DV4 - SN3914; ConvF(4.82, 4.82, 4.82); Calibrated: 10/23/2013;
Sensor-Surface: 1.4mm (Mechanical Surface Detection)
Electronics: DAE4 Sn1333; Calibrated: 11/19/2013
Phantom: SAM V5.0 Right; Type: QD000P40CD; Serial: 1647
Measurement SW: DASY52, Version 52.8 (8); SEMCAD X Version 14.6.10 (7164)

5300 MHz System Verification

Area Scan (7x8x1): Measurement grid: dx=10mm, dy=10mm
Zoom Scan (7x7x7)/Cube 0: Measurement grid: dx=4mm, dy=4mm, dz=1.4mm; Graded Ratio: 1.4
Input Power = 20 dBm (100 mW)
Peak SAR (extrapolated) = 33.0 W/kg
SAR(1 g) = 7.9 W/kg
Deviation = -4.82%

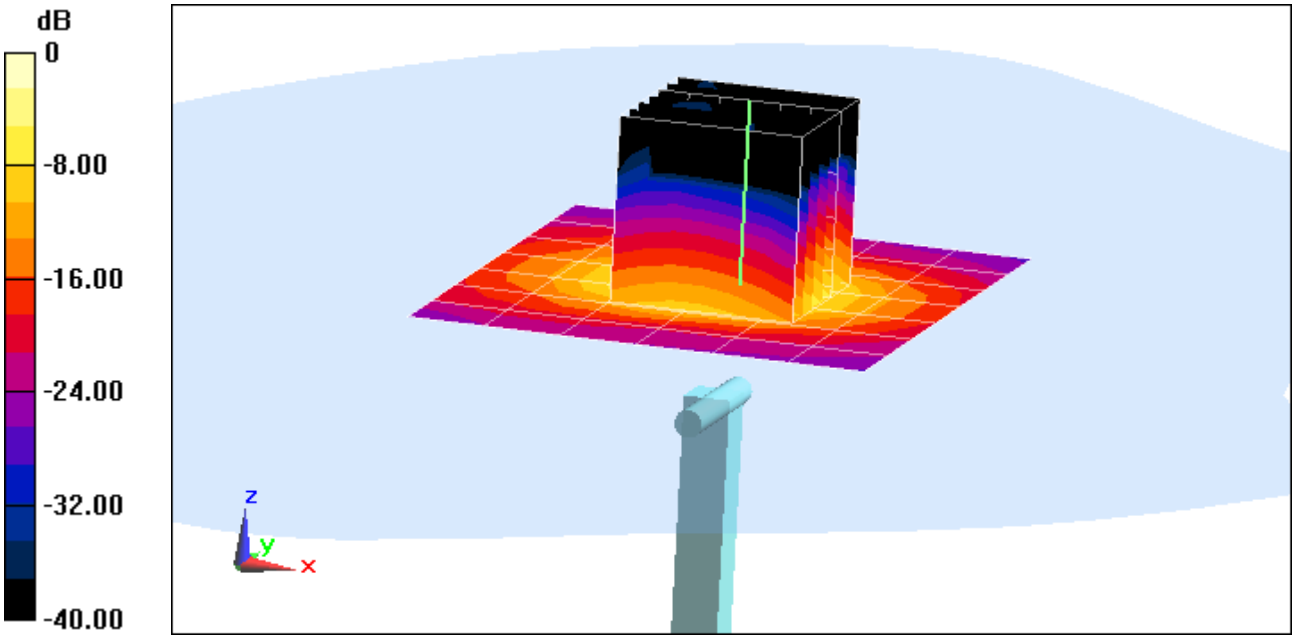

0 dB = 15.1 W/kg = 11.79 dBW/kg

PCTEST ENGINEERING LABORATORY, INC.

DUT: Dipole 5500 MHz; Type: D5GHzV2; Serial: 1057

Communication System: UID 0, CW; Frequency: 5500 MHz; Duty Cycle: 1:1
Medium: 5 GHz Head Medium parameters used:
f = 5500 MHz; σ = 4.923 S/m; ε_r = 37.189; ρ = 1000 kg/m^3
Phantom section: Flat Section; Space: 1.0 cm

Test Date: 06-19-2014; Ambient Temp: 24.5°C; Tissue Temp: 24.2°C

Probe: EX3DV4 - SN3914; ConvF(4.55, 4.55, 4.55); Calibrated: 10/23/2013;
Sensor-Surface: 1.4mm (Mechanical Surface Detection)
Electronics: DAE4 Sn1333; Calibrated: 11/19/2013
Phantom: SAM V5.0 Right; Type: QD000P40CD; Serial: 1647
Measurement SW: DASY52, Version 52.8 (8); SEMCAD X Version 14.6.10 (7164)

5500 MHz System Verification

Area Scan (7x7x1): Measurement grid: dx=10mm, dy=10mm
Zoom Scan (7x7x7)/Cube 0: Measurement grid: dx=4mm, dy=4mm, dz=1.4mm; Graded Ratio: 1.4
Input Power = 20 dBm (100 mW)
Peak SAR (extrapolated) = 35.2 W/kg
SAR(1 g) = 7.98 W/kg
Deviation = -5.34%

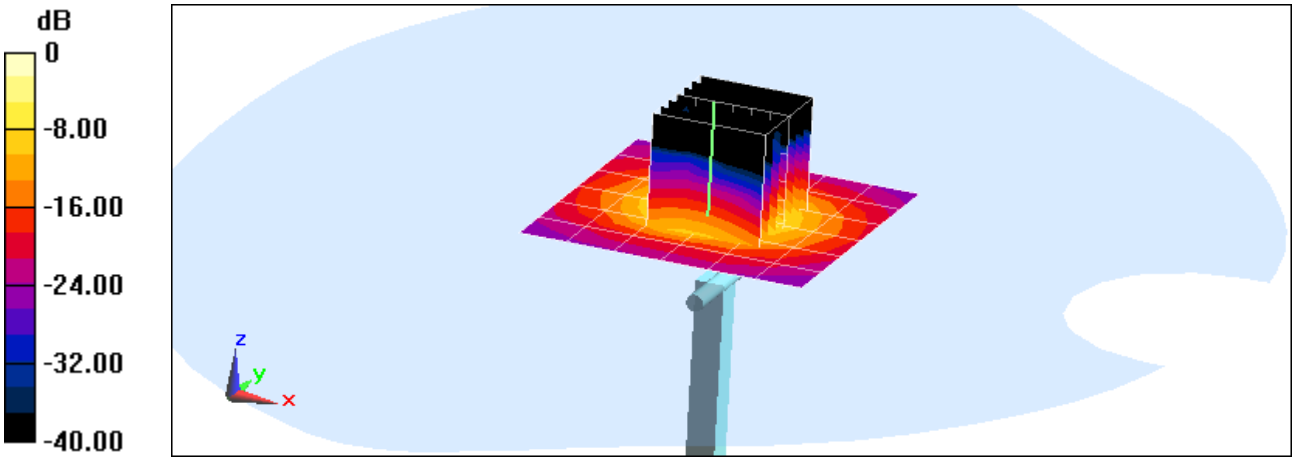

0 dB = 19.1 W/kg = 12.81 dBW/kg

PCTEST ENGINEERING LABORATORY, INC.

DUT: Dipole 5800 MHz; Type: D5GHzV2; Serial: 1057

Communication System: UID 0, CW; Frequency: 5800 MHz; Duty Cycle: 1:1
Medium: 5 GHz Head Medium parameters used:
f = 5800 MHz; σ = 5.219 S/m; ε_r = 36.822; ρ = 1000 kg/m^3
Phantom section: Flat Section; Space: 1.0 cm

Test Date: 06-19-2014; Ambient Temp: 24.5°C; Tissue Temp: 24.3°C

Probe: EX3DV4 - SN3914; ConvF(4.52, 4.52, 4.52); Calibrated: 10/23/2013;
Sensor-Surface: 1.4mm (Mechanical Surface Detection)
Electronics: DAE4 Sn1333; Calibrated: 11/19/2013
Phantom: SAM V5.0 Right; Type: QD000P40CD; Serial: 1647
Measurement SW: DASY52, Version 52.8 (8); SEMCAD X Version 14.6.10 (7164)

5800 MHz System Verification

Area Scan (7x7x1): Measurement grid: dx=10mm, dy=10mm
Zoom Scan (7x7x7)/Cube 0: Measurement grid: dx=4mm, dy=4mm, dz=1.4mm; Graded Ratio: 1.4
Input Power = 20 dBm (100 mW)
Peak SAR (extrapolated) = 32.1 W/kg
SAR(1 g) = 7.47 W/kg
Deviation = -5.80%

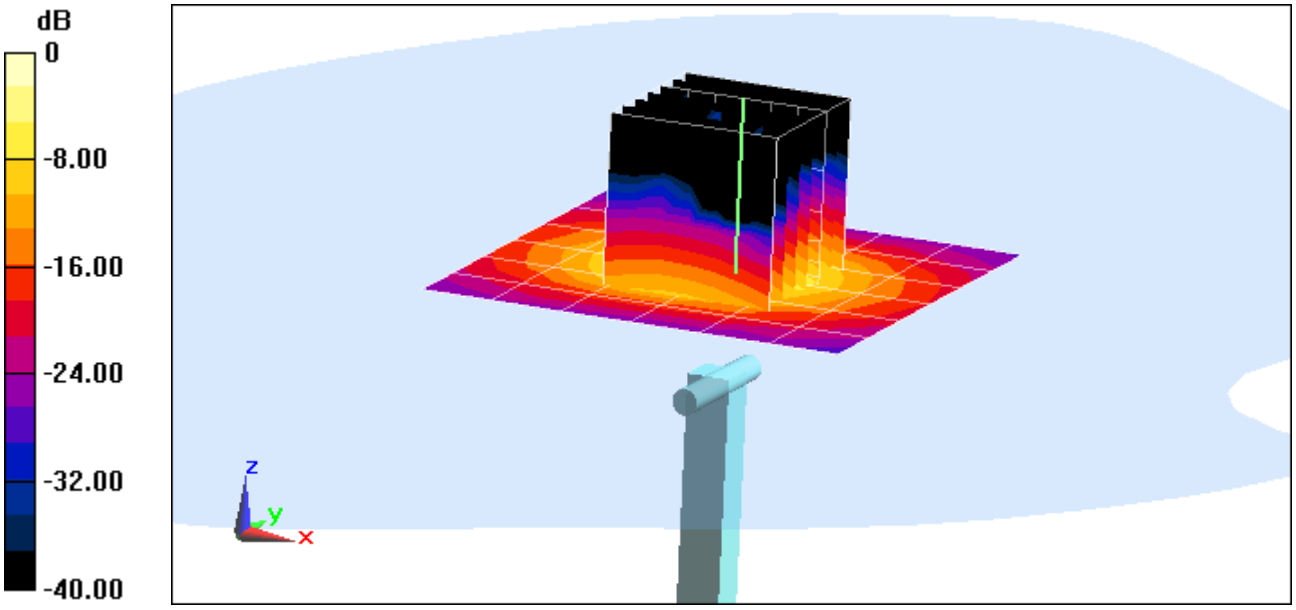

0 dB = 16.9 W/kg = 12.28 dBW/kg

PCTEST ENGINEERING LABORATORY, INC.

DUT: Dipole 835 MHz; Type: D835V2; Serial: 4d133

Communication System: UID 0, CW; Frequency: 835 MHz; Duty Cycle: 1:1
Medium: 835 Body Medium parameters used:
f = 835 MHz; σ = 0.942 S/m; ε_r = 55.193; ρ = 1000 kg/m^3
Phantom section: Flat Section; Space: 1.5 cm

Test Date: 06-23-2014; Ambient Temp: 22.6°C; Tissue Temp: 22.1°C

Probe: ES3DV3 - SN3288; ConvF(6.27, 6.27, 6.27); Calibrated: 9/23/2013;
Sensor-Surface: 4mm (Mechanical Surface Detection)
Electronics: DAE4 Sn1323; Calibrated: 9/17/2013
Phantom: SAM with CRP; Type: SAM; Serial: TP1375
Measurement SW: DASY4, Version 4.7 (80); SEMCAD X Version 14.6.10 (7164)

835MHz System Verification

Area Scan (7x13x1): Measurement grid: dx=15mm, dy=15mm
Zoom Scan (5x5x7)/Cube 0: Measurement grid: dx=8mm, dy=8mm, dz=5mm
Input Power = 20 dBm (100 mW)
Peak SAR (extrapolated) = 1.42 W/kg
SAR(1 g) = 0.977 W/kg
Deviation = 1.66%

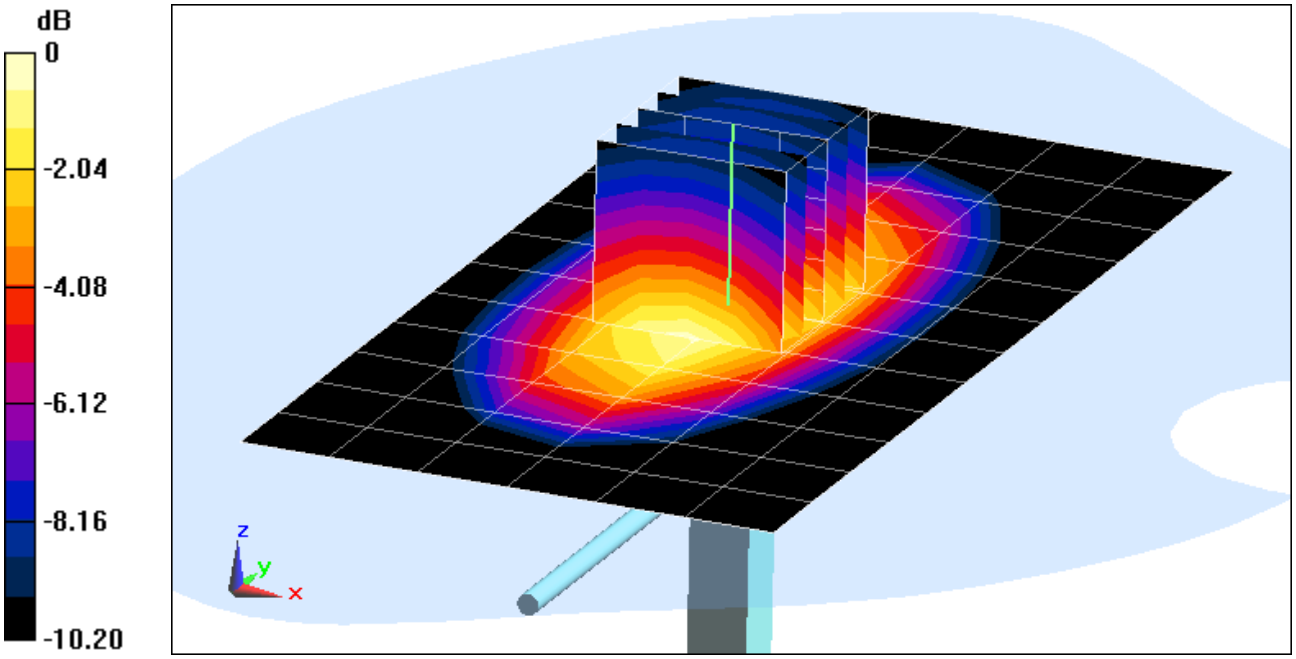

0 dB = 1.06 W/kg = 0.25 dBW/kg

PCTEST ENGINEERING LABORATORY, INC.

DUT: SAR Dipole 1900 MHz; Type: D1900V2; Serial: 5d148

Communication System: UID 0, CW; Frequency: 1900 MHz; Duty Cycle: 1:1
Medium: 1900 Body Medium parameters used (interpolated):
f = 1900 MHz; σ = 1.503 S/m; ε_r = 53.395; ρ = 1000 kg/m^3
Phantom section: Flat Section; Space: 1.0 cm

Test Date: 06-19-2014; Ambient Temp: 23.2°C; Tissue Temp: 21.3°C

Probe: ES3DV3 - SN3288; ConvF(4.82, 4.82, 4.82); Calibrated: 9/23/2013;
Sensor-Surface: 4mm (Mechanical Surface Detection)
Electronics: DAE4 Sn1323; Calibrated: 9/17/2013
Phantom: SAM Sub Dasy B; Type: SAM 5.0; Serial: TP-1626
Measurement SW: DASY4, Version 4.7 (80); SEMCAD X Version 14.6.10 (7164)

1900MHz System Verification

Area Scan (5x7x1): Measurement grid: dx=15mm, dy=15mm
Zoom Scan (5x5x7)/Cube 0: Measurement grid: dx=8mm, dy=8mm, dz=5mm
Input Power = 20 dBm (100 mW)
Peak SAR (extrapolated) = 6.99 W/kg
SAR(1 g) = 4.07 W/kg
Deviation = 3.56%

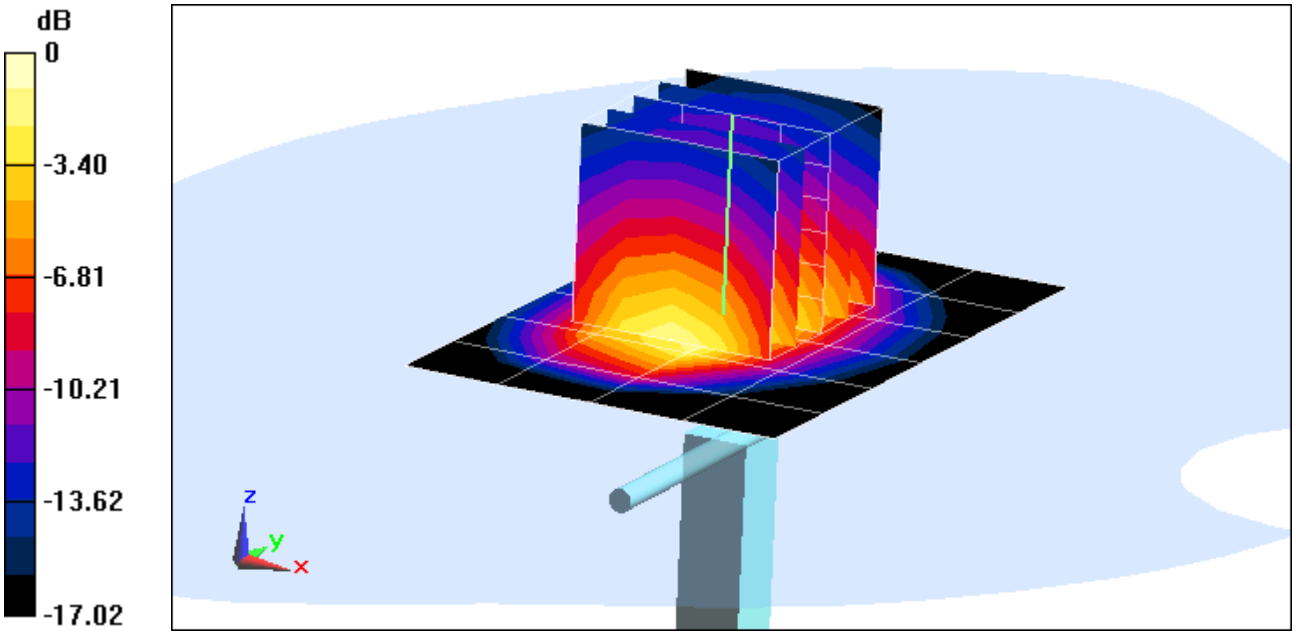

0 dB = 4.50 W/kg = 6.53 dBW/kg

PCTEST ENGINEERING LABORATORY, INC.

DUT: Dipole 2450 MHz; Type: D2450V2; Serial: 797

Communication System: UID 0, CW; Frequency: 2450 MHz; Duty Cycle: 1:1
Medium: 2450 Body Medium parameters used:
f = 2450 MHz; σ = 2.024 S/m; ε_r = 51.126; ρ = 1000 kg/m^3
Phantom section: Flat Section; Space: 1.0 cm

Test Date: 06-17-2014; Ambient Temp: 23.6°C; Tissue Temp: 22.9°C

Probe: ES3DV3 - SN3258; ConvF(4.14, 4.14, 4.14); Calibrated: 2/25/2014;
Sensor-Surface: 3mm (Mechanical Surface Detection)
Electronics: DAE4 Sn665; Calibrated: 2/26/2014
Phantom: ELI v5.0; Type: QDOVA002AA; Serial: TP-1158
Measurement SW: DASY52, Version 52.8 (8); SEMCAD X Version 14.6.10 (7164)

2450 MHz System Verification

Area Scan (8x9x1): Measurement grid: dx=12mm, dy=12mm
Zoom Scan (7x7x7)/Cube 0: Measurement grid: dx=5mm, dy=5mm, dz=5mm
Input Power = 20 dBm (100 mW)
Peak SAR (extrapolated) = 11.0 W/kg
SAR(1 g) = 5.26 W/kg
Deviation = 6.48%

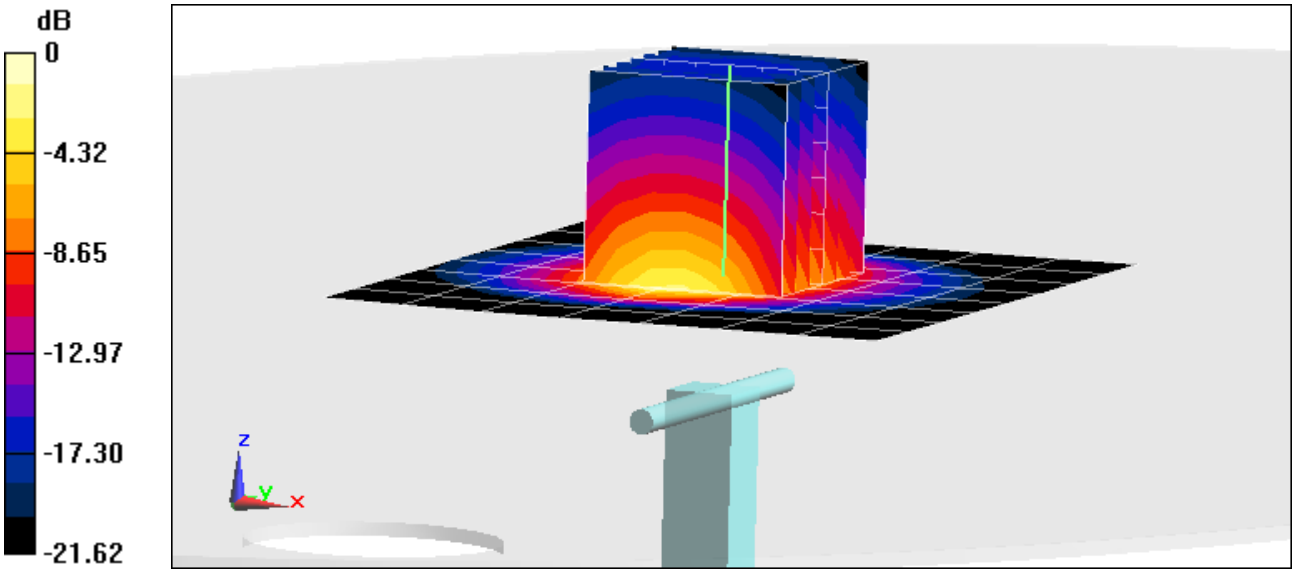

0 dB = 6.78 W/kg = 8.31 dBW/kg

PCTEST ENGINEERING LABORATORY, INC.

DUT: Dipole 5200 MHz; Type: D5GHzV2; Serial: 1007

Communication System: UID 0, CW; Frequency: 5200 MHz;Duty Cycle: 1:1
Medium: 5 GHz Body Medium parameters used:
f = 5200 MHz; σ = 5.5 S/m; ε_r = 47.385; ρ = 1000 kg/m^3
Phantom section: Flat Section, Space: 1.0 cm

Test Date: 06-23-2014; Ambient Temp: 22.5°C; Tissue Temp: 23.0°C

Probe: EX3DV4 - SN3920; ConvF(4.23, 4.23, 4.23); Calibrated: 12/18/2013;
Sensor-Surface: 1.4mm (Mechanical Surface Detection)
Electronics: DAE4 Sn649; Calibrated: 12/12/2013
Phantom: SAM Sub; Type: SAM 4.0; Serial: TP-1357
Measurement SW: DASY4, Version 4.7 (80); SEMCAD X Version 14.6.10 (7164)

5200MHz System Verification

Area Scan (7x9x1): Measurement grid: dx=10mm, dy=10mm

Zoom Scan (9x9x7)/Cube 0: Measurement grid: dx=4mm, dy=4mm, dz=1.4mm; Graded Ratio: 1.4
Input Power = 20 dBm (100 mW)
Peak SAR (extrapolated) = 32.5 W/kg
SAR(1 g) = 7.35 W/kg
Deviation = 1.24%

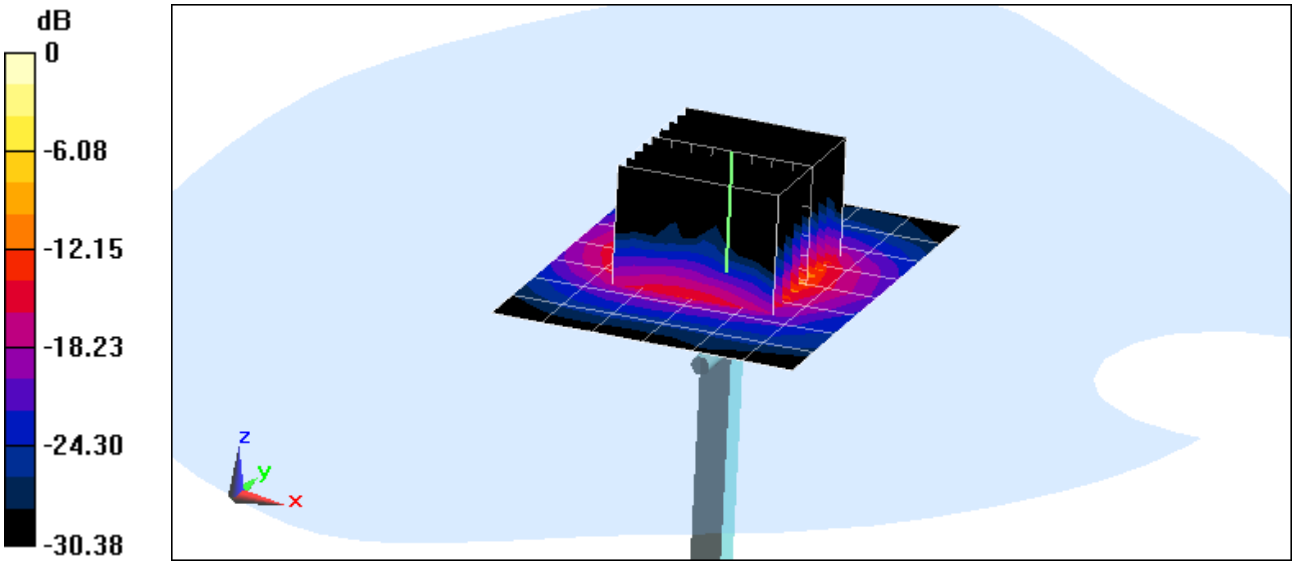

0 dB = 18.3 W/kg = 12.62 dBW/kg

PCTEST ENGINEERING LABORATORY, INC.

DUT: Dipole 5300 MHz; Type: D5GHzV2; Serial: 1007

Communication System: UID 0, CW; Frequency: 5300 MHz; Duty Cycle: 1:1
Medium: 5 GHz Body Medium parameters used:
f = 5300 MHz; σ = 5.62 S/m; ε_r = 47.117; ρ = 1000 kg/m^3
Phantom section: Flat Section; Space: 1.0 cm

Test Date: 06-23-2014; Ambient Temp: 22.5°C; Tissue Temp: 23.0°C

Probe: EX3DV4 - SN3920; ConvF(4.11, 4.11, 4.11); Calibrated: 12/18/2013;
Sensor-Surface: 1.4mm (Mechanical Surface Detection)
Electronics: DAE4 Sn649; Calibrated: 12/12/2013
Phantom: SAM Sub; Type: SAM 4.0; Serial: TP-1357
Measurement SW: DASY4, Version 4.7 (80); SEMCAD X Version 14.6.10 (7164)

5300MHz System Verification

Area Scan (7x9x1): Measurement grid: dx=10mm, dy=10mm
Zoom Scan (9x9x7)/Cube 0: Measurement grid: dx=4mm, dy=4mm, dz=1.4mm; Graded Ratio: 1.4
Input Power = 20 dBm (100 mW)
Peak SAR (extrapolated) = 33.0 W/kg
SAR(1 g) = 7.22 W/kg
Deviation = -3.35%

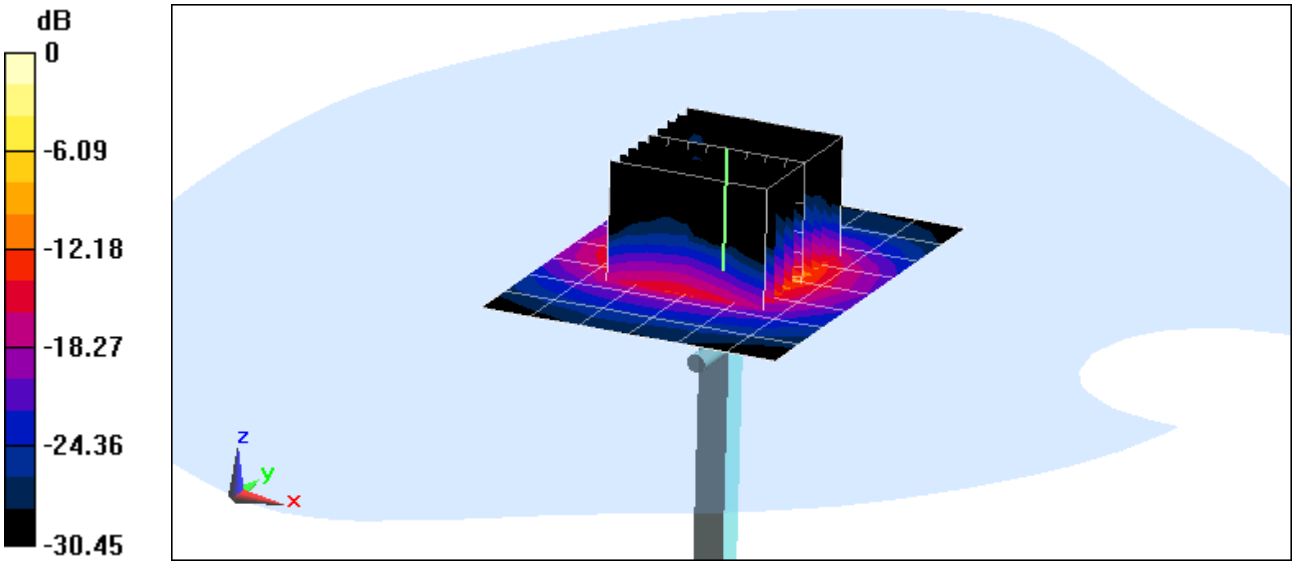

0 dB = 18.1 W/kg = 12.58 dBW/kg

PCTEST ENGINEERING LABORATORY, INC.

DUT: Dipole 5500 MHz; Type: D5GHzV2; Serial: 1007

Communication System: UID 0, CW; Frequency: 5500 MHz; Duty Cycle: 1:1
Medium: 5 GHz Body Medium parameters used:
f = 5500 MHz; σ = 5.873 S/m; ε_r = 46.816; ρ = 1000 kg/m^3
Phantom section: Flat Section; Space: 1.0 cm

Test Date: 06-23-2014; Ambient Temp: 22.6°C; Tissue Temp: 22.8°C

Probe: EX3DV4 - SN3920; ConvF(3.8, 3.8, 3.8); Calibrated: 12/18/2013;
Sensor-Surface: 1.4mm (Mechanical Surface Detection)
Electronics: DAE4 Sn649; Calibrated: 12/12/2013
Phantom: SAM Sub; Type: SAM 4.0; Serial: TP-1357
Measurement SW: DASY4, Version 4.7 (80); SEMCAD X Version 14.6.10 (7164)

5500MHz System Verification

Area Scan (7x9x1): Measurement grid: dx=10mm, dy=10mm
Zoom Scan (9x9x7)/Cube 0: Measurement grid: dx=4mm, dy=4mm, dz=1.4mm; Graded Ratio: 1.4
Input Power = 20 dBm (100 mW)
Peak SAR (extrapolated) = 34.9 W/kg
SAR(1 g) = 7.53 W/kg
Deviation = -0.79%

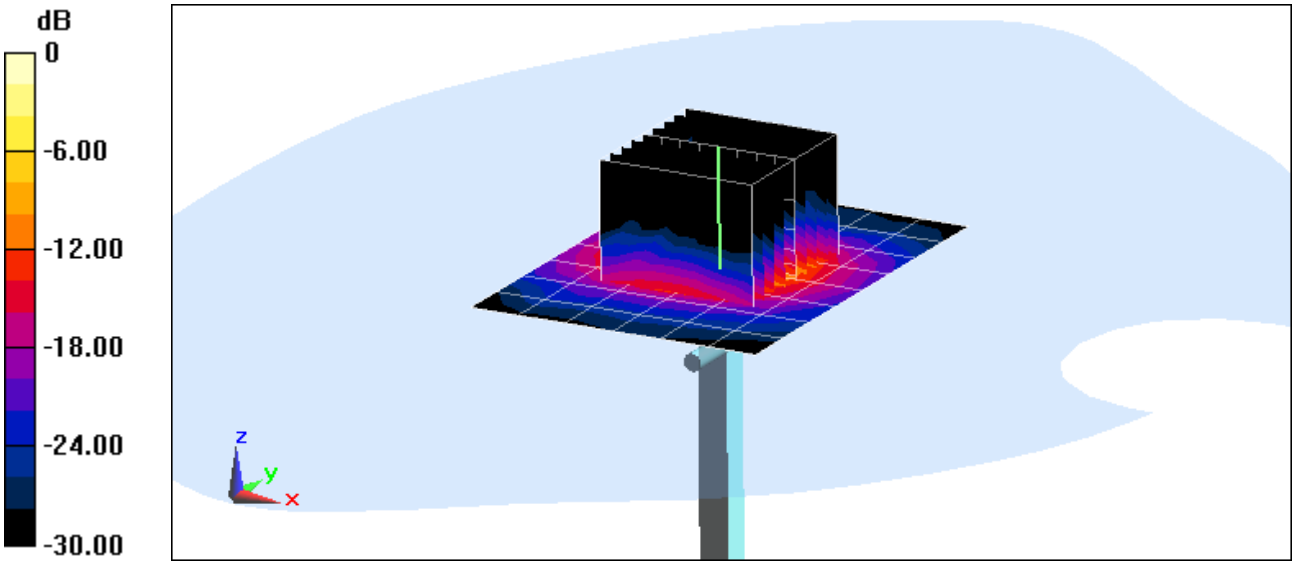

0 dB = 19.4 W/kg = 12.88 dBW/kg

PCTEST ENGINEERING LABORATORY, INC.

DUT: Dipole 5800 MHz; Type: D5GHzV2; Serial: 1007

Communication System: UID 0, CW; Frequency: 5800 MHz; Duty Cycle: 1:1
Medium: 5 GHz Body Medium parameters used:
f = 5800 MHz; σ = 6.287 S/m; ε_r = 46.323; ρ = 1000 kg/m^3
Phantom section: Flat Section; Space: 1.0 cm

Test Date: 06-23-2014; Ambient Temp: 22.6°C; Tissue Temp: 22.8°C

Probe: EX3DV4 - SN3920; ConvF(4, 4, 4); Calibrated: 12/18/2013;
Sensor-Surface: 1.4mm (Mechanical Surface Detection)
Electronics: DAE4 Sn649; Calibrated: 12/12/2013
Phantom: SAM Sub; Type: SAM 4.0; Serial: TP-1357
Measurement SW: DASY4, Version 4.7 (80); SEMCAD X Version 14.6.10 (7164)

5800MHz System Verification

Area Scan (7x9x1): Measurement grid: dx=10mm, dy=10mm
Zoom Scan (9x9x7)/Cube 0: Measurement grid: dx=4mm, dy=4mm, dz=1.4mm; Graded Ratio: 1.4
Input Power = 20 dBm (100 mW)
Peak SAR (extrapolated) = 34.2 W/kg
SAR(1 g) = 7.06 W/kg
Deviation = -3.16 %

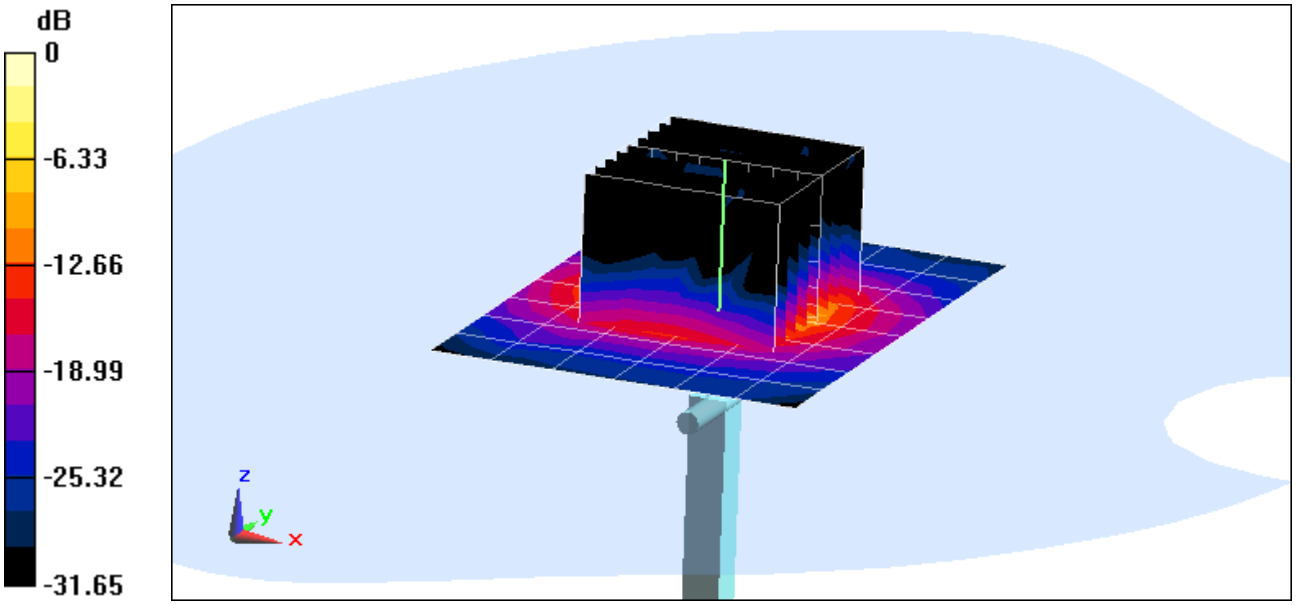

0 dB = 18.1 W/kg = 12.58 dBW/kg