EPB
ED.

Smart MBS

System Description/Introduction

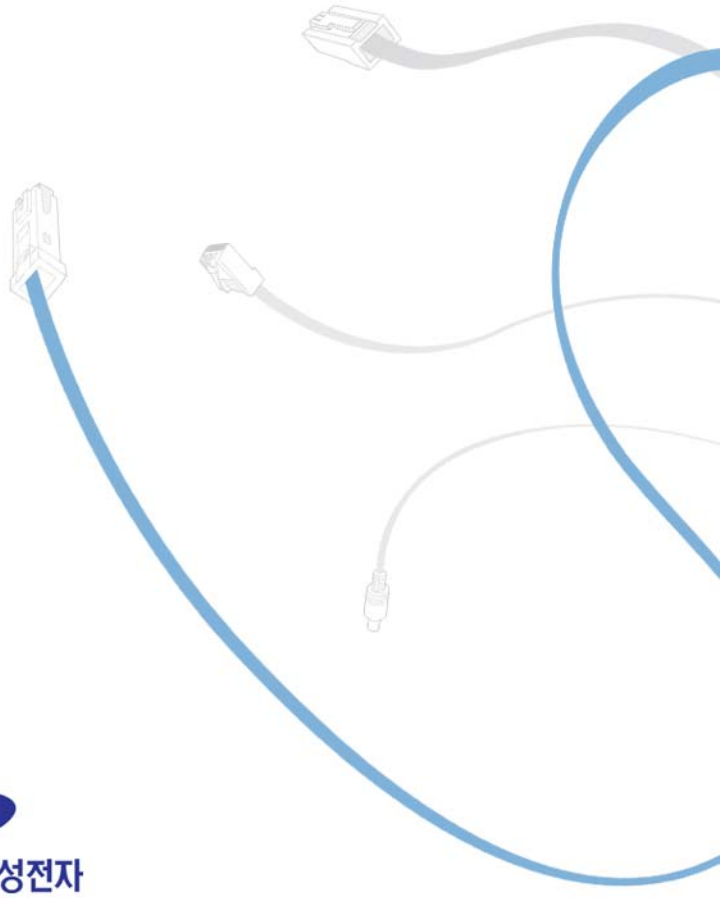

SAMSUNG
삼성전자

Copyright

All text and images in this document are subject to the copyright of SAMSUNG Electronics Co., Ltd.
This document may not be reproduced, distributed, or modified without the written permission of SAMSUNG Electronics Co., Ltd.

Trademark

The marks appearing on this document are trademarks of SAMSUNG Electronics Co., Ltd, its subsidiaries, or affiliates.

This manual should be read and used as a guideline for properly installing and operating the product.

This manual may be changed for the system improvement, standardization and other technical reasons without prior notice.

If you need updated manuals or have any questions concerning the contents of the manuals, contact our **Document Center** at the following address or Web site:

Address: Document Center 3rd Floor Jeong-bo-tong-sin-dong. Dong-Suwon P.O. Box 105, 416, Maetan-3dong Yeongtong-gu, Suwon-si, Gyeonggi-do, Korea 442-600

Homepage: http://www.samsungdocs.com

©2011 SAMSUNG Electronics Co., Ltd. All rights reserved.

INTRODUCTION

Purpose

This document introduces characteristics, features, and structure for Smart MBS Base Station of the Samsung Multi-Modal System.

Document Content and Organization

This document consists of 4 CHAPTERS, APPENDIX, and ACRONYMS.

Chapter 1. Samsung Multimodal System Abstract

Explains the following…

- Smart MBS System Introduction
- Samsung Multimodal System Network Configuration
- Samsung Multimodal System Feature

Chapter 2. Smart MBS Abstract

Explains the following…

- Smart MBS System's Characteristics
- Smart MBS 's Main Feature
- Smart MBS 's Specification
- Operation manual on Backhaul Interface

Chapter 3. HW Architecture of Smart MBS

Explains the following…

- System Internal Structure
- UADU (Universal Platform Digital Unit)
- RRH (Remote Radio Head)
- Thermal Radiation Structure

Chapter 4. SW Architecture of Smart MBS

Explains the following…

- Smart MBS SW Structure
- Loading Flow

ABBREVIATION

Provides definition for acronyms used in this document.

Conventions

Following symbols are used in this document. The information provided along with this symbol should be familiarized for safe operation/handling of the system.

Reference

Additional Reference

Provides reference in addition to the main contents.

Revision History

Rev.	Date	Note
1.0	2011.06	First Edition

© SAMSUNG Electronics Co., Ltd.

TABLE OF CONTENTS

INTRODUCTION I

Purpose I
Document Content and Organization I
Conventions II
Revision History II

Chapter 1. Samsung Multi-ModalSystem Abstract 1-1

1.1 Introduction to Smart MBS System 1-1
1.2 Samsung Multi-Modal System Network Architecture 1-4
1.2.1 CDMA System Network Architecture 1-5
1.2.2 LTE System Network Structure 1-6
1.3 Samsung Multi-Modal System Feature 1-9
1.3.1 CDMA System Feature 1-9
1.3.2 LTE System Feature 1-10

Chapter 2. Smart MBS Abstract 2-1

2.1 Smart MBS System Description 2-1
2.1.1 Smart MBS CDMA System Feature 2-3
2.1.3 Smart MBS LTE System Feature 2-3
2.2 Smart MBS Main Feature 2-6
2.2.1 Physical layer Processing Feature 2-6
2.2.2 Call Processing Feature 2-9
2.2.3 IP Processing Feature 2-10
2.2.4 Convenient Operation and Maintenance Feature 2-11
2.3 Smart MBS Specification 2-14
2.4 Backhaul Interface Operation 2-18

Chapter 3. Smart MBS's Hardware Structure 3-1

3.1 Internal System Architecture 3-3
3.1.1 CDMA Internal System Architecture 3-4

3.1.2 LTE Internal System Structure 3-6

3.2 UADU(Universal Platform Digital Unit) **3-8**

3.3 RRH (Remote Radio Head) **3-14**

3.4 Cooling Mechanism **3-16**

3.4.1 Digital Unit (DU) 3-16

3.4.2 RRH (Remote Radio Head) 3-16

3.5 Interface structure **3-17**

Chapter 4. Smart MBS Software Architecture **4-1**

4.1 Smart MBS SW Architecture **4-1**

4.1.1 CDMA System Basic SW architecture 4-1

4.1.2 LTE System Basic SW Architecture 4-4

4.2 Loading Flow **4-7**

ABBREVIATION **I**

© SAMSUNG Electronics Co., Ltd.

LIST OF FIGURES

Figure 1.1 Smart MBS System Schematic 1-2
Figure 1.2 Samsung Multi-modal Network Architecture 1-4
Figure 1.3 CDMA Network Architecture of Samsung Multi-Modal System 1-5
Figure 1.4 Samsung Multi-Mode System's LTE Network Architecture 1-7
Figure 1.5 CDMA System Functional Structure 1-9
Figure 1.6 Function of E-UTRAN and EPC 1-10

Figure 3.1 UADU Configuration - CDMA Single mode 3-2
Figure 3.2 UADU Configuration - LTE Single mode 3-2
Figure 3.3 UADU Configuration - CDMA + LTE dual mode 3-2
Figure 3.5 RRH-P4(1.9GHz) 3-3
Figure 3.6 Smart MBS CDMA Internal Block Diagram 3-4
Figure 3.7 Smart MBS LTE's Internal Block Diagram 3-6
Figure 3.8 UADU Configuration - CDMA Only 3-12
Figure 3.9 UADU Configuration - CDMA Only(Two UADU) 3-13
Figure 3.10 UADU Configuration - LTE Only 3-13
Figure 3.11 UADU Configuration - CDMA+LTE Dual Mode 3-13
Figure 3.12 UADU Configuration - CDMA+LTE Dual Mode(Two UADU) 3-13
Figure 3.13 UADU's FAN Structure 3-16
Figure 3.14 UADU's Cooling Mechanism 3-16
Figure 3.15 HW Interface structure of UADU(CDMA) 3-17
Figure 3.16 HW Interface structure of UADU(LTE) 3-18
Figure 3.18 HW Interface structure of RRH-P4 3-18
Figure 4.1 Smart MBS CDMA Software Architecture 4-1
Figure 4.2 CDMA Common Software Architecture 4-2
Figure 4.3 CDMA OAM Software Architecture 4-3
Figure 4.4 CDMA Call Processing Software Structure 4-3
Figure 4.5 Smart MBS LTE Software Architecture 4-4
Figure 4.6 Smart MBS' Loading Signal Flow 4-8

This page is intentionally left blank.

© SAMSUNG Electronics Co., Ltd.

Chapter 1. Samsung Multi-Modal System Abstract

1.1 Introduction to Smart MBS System

As mobile telecommunication technology has experienced rapid growth from “Analog Mobile Telecommunication(1st Generation)” to “Digital Mobile Telecommunication(2nd Generation)” to “CDMA 2000(3rd Generation)”, and into “LTE(4th Generation)”, voice service is being expanded into data service. Especially, “wire/wireless hybrid service”, “smartphone”, and “mobile terminal” increased the demands for the high speed wireless technology. Along with the enhancement of various mobile telecommunication networks, it is now becoming common for a single terminal to support different mobile technologies.

“Smart MBS System” is multi-mode base station that will satisfy such needs of mobile telecommunication market by integrating Voice(1X), Data(EVDO), LTE(4G) into a single base station equipment.
Smart MBS System mounts common DU(Digital Unit) Platform, and RRH (per each frequency bandwidth) that operator can decide to configure it with either single or multiple mobile technology. Smart MBS System provides CDMA(w/ FDD), LTE(w/FDD).

Smart MBS System supports the following telecommunication technologies.

- CDMA2000 1X/1X Advanced
  Having CDMA2000 1X as a reference, integrate the system (w/ EVRC-B, RLIC, QOF, New RC algorithm) and the terminal(w/ (e)QLIC, MRD, New RC algorithm) to support 1X Advanced. As a result, voice capacity enhancement will be provided.

- CDMA2000 1xEV-DO Rev.A/Rev.B
  Smart MBS supports CDMA2000 1xEV-DO Rev.A/Rev.B service and data service of CDMA network.

- LTE (Long Term Evolution)

Samsung LTE System is a wireless network system that supports 3GPP LTE(Long Term Evolution)(a.k.a. LTE). It improves the existing 3GPP mobile telecommunication system(low data throughput, but high in cost) to a next generation wireless network system which provides a high speed data service with minimal cost. Samsung LTE System supports "Downlink OFDMA"(Orthogonal Frequency Division Multiple Access) with either FDD(Frequency Division Duplex)), "Uplink SC(Single Carrier) FDMA", and "Scalable Bandwidth(for various spectrum allocation)" to provide high speed data service. Also, high-end hardware is implemented to improve system performance and capacity that various high speed data feature/service can be provided.

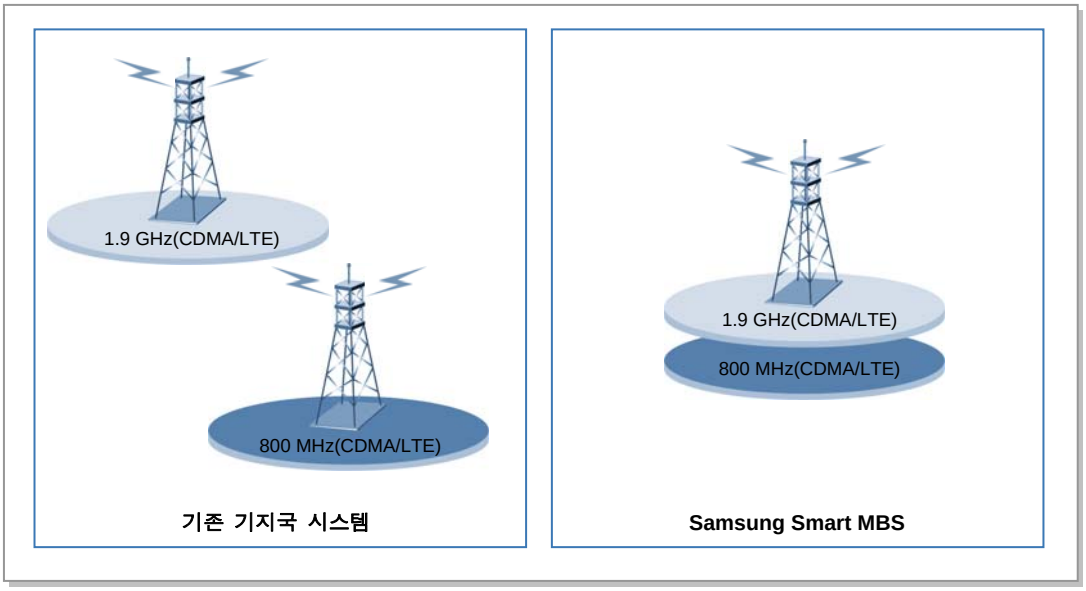

Figure 1.1 Smart MBS System Schematic

Samsung Multimodal System consists of following major features.

Enhancement of CDMA Service Quality

In case "Smart MBS System" is operating CDMA, it provides "EVDO Rev.0/Rev.A and 1X Advanced" in order to improve the low throughput and limited voice capacity. In addition, "2branch Rx Diversity" and "4branch Rx diversity" feature is provided that CDMA network coverage is enhanced for versatile CDMA service.

Ease of Expanding 4G Service

Legacy base stations consist of "3G CDMA 1X" for voice calls, "EVDO" for Data, "Battery", and "Rectifier". If 4G service was to be supplied, additional 4G base station equipment had to be installed. Nevertheless, "Smart MBS Base Station" only requires DU(Digital Unit) cabinet and Battery cabinet to provide existing service as well as 4G Service with minimal board replacements and software upgrades.
Therefore, Smart MBS Basestations utilizes the cables, rectifiers, and batteries of the existing basestation system. Its ease of 4G installation will bring about efficient network implementation in the future commercial 4G service.

© SAMSUNG Electronics Co., Ltd.

Green Solution

Smart MBS Basestation combines “3G BS equipment” and the “next generation 4G BS equipment” into a single Base Station, and also contains the rectifier within the DU cabinet. Meanwhile, RRH(Remote Radio Head) (TX/RX processing device) is separated apart from BS equipment for natural air cooling that it can minimize footprint, power usage, and carbon dioxide emissions.

Provides Efficient Backhaul Operation

Smart MBS Basestation provides functionality that can operate multiple telecommunication technologies into a single physical backhaul network for reducing backhaul expenses. In addition, it supports an efficient backhaul operation by providing a “per-technology” sectional network operation by logically separating the backhaul, minimizing traffic interference between different technologies.

NOTE

About Smart MBS

Smart MBS is basestation of Samsung Multi-Modal System that will provide BTS and eNB which will respectively serve the functionality of CDMA and LTE. It is controlled by its respective upper NE (BSC for CDMA,EPC for LTE) to handle CDMA/LTE calls. For detailed description of function and structure of Smart MBS CDMA/LTE, please refer to Chapter 2,3,4 of this document. For the function and structure of Smart MBS, please refer to the additional document.

1.2 Samsung Multi-Modal System Network Architecture

Samsung Multi-Modal System is configured as shown in following Figure 1.2.

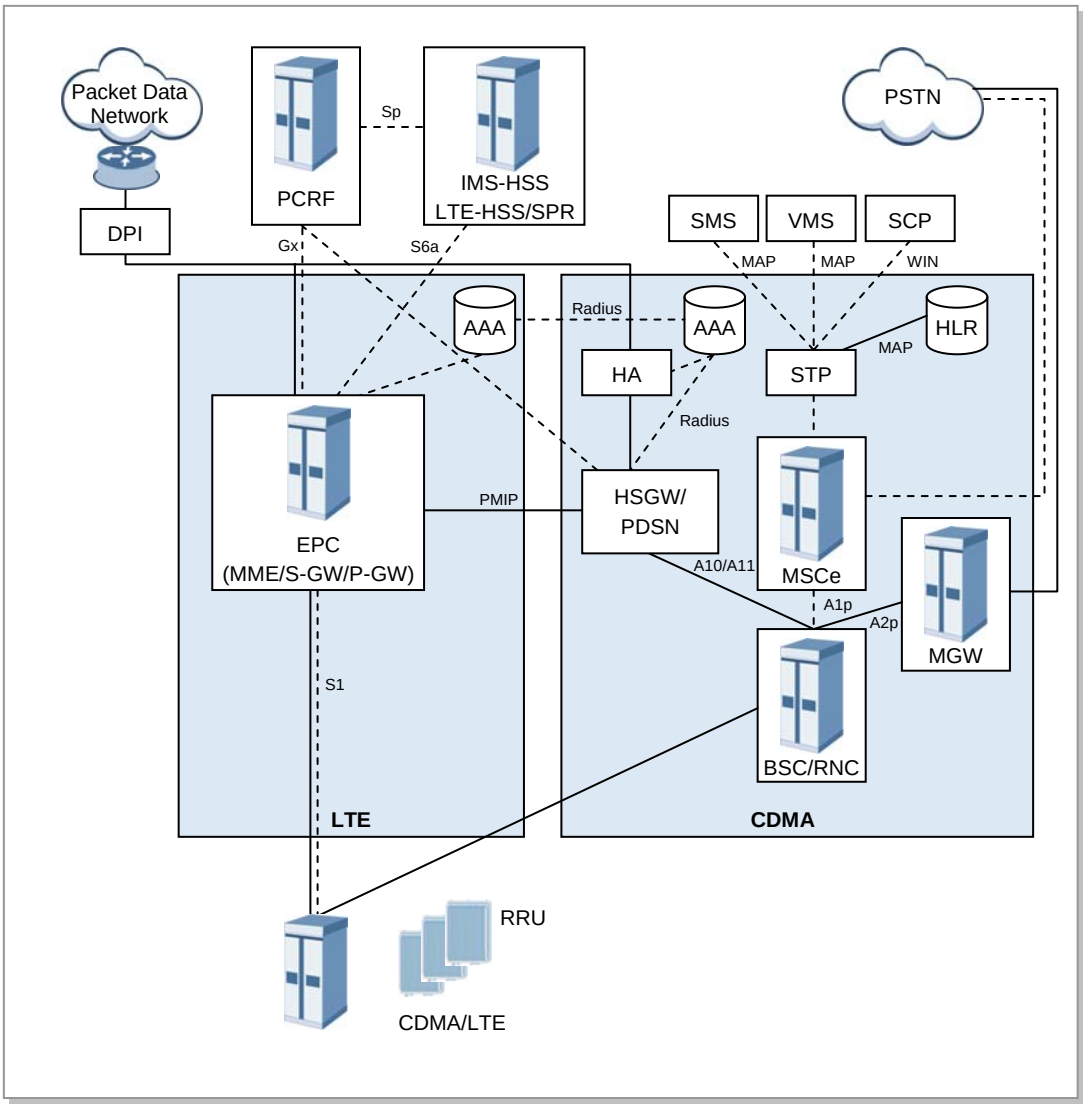

Figure 1.2 Samsung Multi-modal Network Architecture

As shown in Figure 1.2, Smart MBS system plays a role as CDMA/LTE basestation in a Samsung Multi-Modal System network where CDMA, and LTE systems co-exist.

When operating as CDMA, Smart MBS communicates with BSC(CDMA controller), and operator may use BSM(EMS of CDMA) to control and manage CDMA portion of Smart MBS. Likewise, when operating as LTE, it communicates with EPC, and operator may use LSM-R(EMS or LTE) to control and manage LTE portion of Smart MBS.

Following network structure describes the type of each technology supported by Smart MBS.

© SAMSUNG Electronics Co., Ltd.

1.2.1 CDMA System Network Architecture

CDMA system network of "Samsung Multi-Modal System" consists of AN(Access Networks) for terminal access, VCN(Voice Core Network) for voice service, and PCN(Packet Core Network) for packet data service.

AN consists of BTS, BSC(BTS controller), IP Network, Transport Network, and finally BSM to manage these components. AN communicates with VCN(MGW, MSC/MSCe) and PCN(AN-AAA, PDSN) to provide voice/data communication service to mobile subscribers.

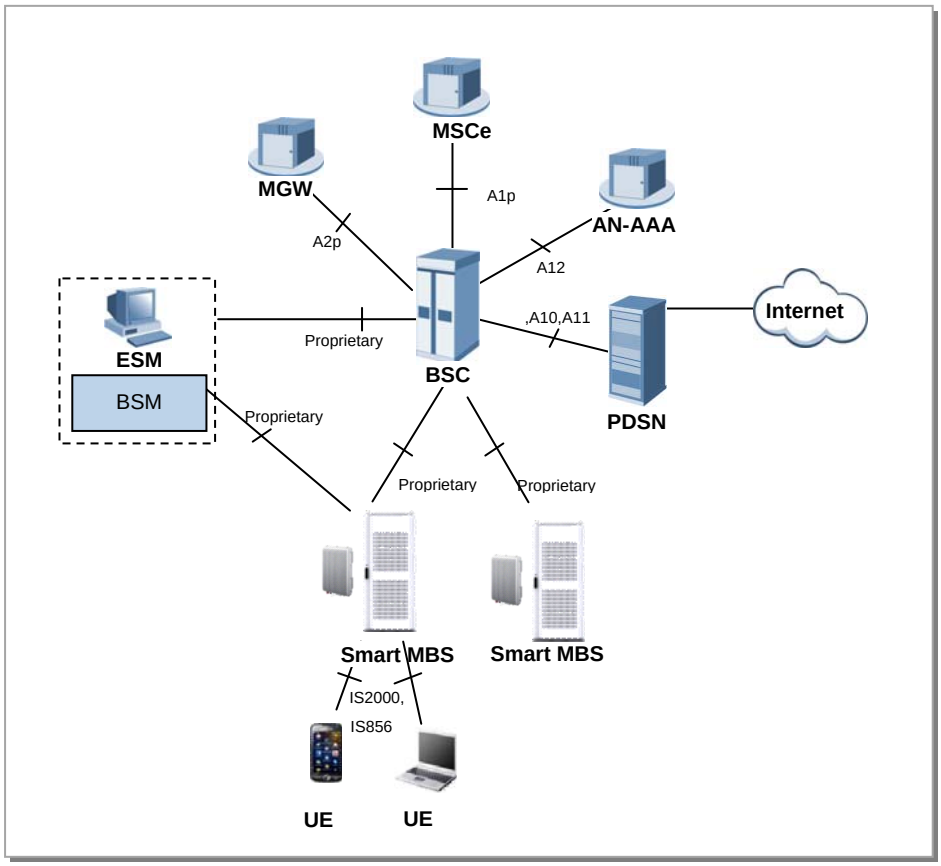

Figure 1.3 CDMA Network Architecture of Samsung Multi-Modal System

CDMA Network Architecture of Samsung Multi-Modal System(where Smart MBS is operated as CDMA BTS) is shown in Figure 1.3. Following describes the feature per each CDMA network devices.

BTS (Base Transceiver Station)

BTS(CDMA Basestation) is a system that handles wireless interface with mobile terminals in accordance with CDMA2000 1X and 1xEV-DO standards. It receives data from mobile terminal and forwards it to Core network through BSC, and receives data from Core via BSC and forwards it to mobile terminal. In order to play a role as wireless transceiver, BS manages RF resources such as CA(Carrier Allocation), Walsh. Also, it supports RF(Radio Frequency) Scheduling and Power Control Functionality.

BSC (Base Station Controller)

Through various backhaul interfaces, BSC coordinates with multiple BTS, and provides resources that are required for communicating with BTS. BSC communicates with VCN to process "Voice/Circuit Data Calls", and coordinates with PCN to process "Packet Data Calls". Also, it carries out operation/maintenance function in conjunction with BSM. It executes RLP(Radio Link Protocol) and SDU(Selection and Distribution Unit) function that Hand-Off will be available for mobile terminals.
BSC also has PCF/(SC/MM) feature that "session control and mobility management function" is executed in 1xEV-DO network.

BSM (BSS System Manager)

BSM provides "operator interface" that operators can control and manage BCS and BTS. For Operation/Maintenance of BSC and BTS, BSM provides required commands such as "alarm/status/performance display", "Configuration Management", and "Parameter Control" of the system.

PDSN (Packet Data Serving Node) System

PDSN is a system which connects PCN to CDMA2000 1X (or 1xEV-DO), and it enables/maintains/disables the PPP to mobile terminal. PDSN particularly carries out functionality as FA(Foreign Agent) for HA(Home Agent) to provide mobile IP service.

AN-AAA (Access Network-Authorization, Authentication and Accounting)

AN-AAA is a server that performs authentication for subscribers in CDMA2000 1xEV-DO network. AN-AAA executes authentication based on NAI(Network Access Identifier), and manages the "mapping data" of IMSI and terminal NAI.

MSC (Mobile service Switching Center)/MSCe (MSC emulator)

MSC(e) is a system component which provides "switching" role in CDMA2000 network. It provides additional services by connecting subscribers to additional equipments or other network(PSTN)

MGW (Media Gateway)

MGW is an equipment that provides "bearer gateway functionality" (Media conversion and handling) in a CDMA 2000 network. MGW exchanges PCM data(which is based on TDM) with PSTN, and exchanges voice frame(which is based on IP) with BSC.

1.2.2 LTE System Network Structure

LTE network of Samsung Multi-Modal System incorporates Basestation(eNB), packet core(EPC), and LSM/(MSS). The system consists of multiple basestations(eNB: Evolved UTRAN Node-B) and Gateway (EPC: Evolved Packet Core, MME, S-GW/P-GW), and provides functionality for UE to connect to external network.
In addition, LTE system provides LTE System Manager(LSM) and Self-Optimization Server Feature for Operation/Maintenance of Basestation(eNB).

© SAMSUNG Electronics Co., Ltd.

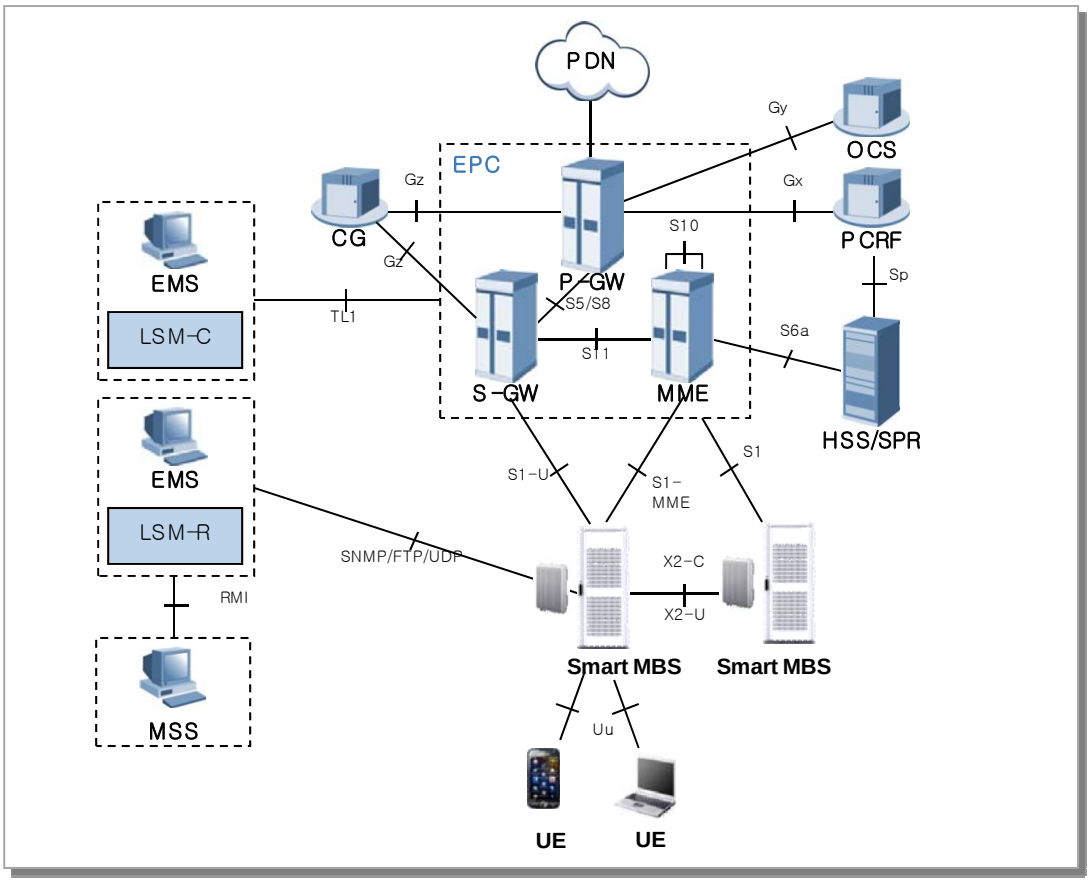

Figure 1.4 Samsung Multi-Mode System's LTE Network Architecture

LTE network architecture of Samsung Multi-Modal System, where the Smart MBS is operated as LTE's Basestation(eNB), is as shown in the Figure 1.4, and following features are available for each LTE network equipment.

eNB (Evolved UTRAN Node-B)

LTE Basestation(eNB) is a system located between UE and EPC, and it handles the packet calls by connecting to UE wirelessly in accordance with "LTE Air standard". eNB executes various functions including Tx/Rx of Wireless signal, Modulation/Demodulation of packet traffic, packet scheduling for efficient use of RF resources, HARQ (Hybrid Automatic Repeat Request) and ARQ (Automatic Repeat Request) process, PDCP(Packet Data Convergence Protocol) of compressed packet header, and wireless resource control. Also, it synchronizes with EPC to execute Handover.

EPC (Evolved Packet Core)

EPC is a system between Basestation(eNB) and PDN. It incorporates MME(Mobility Management Entity), S-GW (Serving Gateway), and PDN Gateway(P-GW).

MME handles control message via basestation(eNB) and NAS signaling protocol, and management of mobility for terminal, management of Tracking Area List, bearer and session management.

S-GW plays role as "anchor" on subscriber plane between 2G, 3G Access system, and LTE system. It manages/modifies packet transmit layer of downlink/uplink data.

P-GW allocates IP Address to UE, plays role as "anchor" for mobility between "LTE System" and "non-3GPP Access Systems", manages billing charges for different service levels, and handles

management/modification of the throughput rate.

LSM (LTE System Manager)

LSM provides a synchronized interface for operator that Operation/Maintenance can be performed for Basestaion(eNB) by operator. It also provides Software management, configuration management, performance management, and alarm management features.

HSS(Home Subscriber Server)

HSS is a database management system that stores the parameter and geographical data of entire subscribers. HSS manages important data including access availability, basic service, and additional service of the subscriber. It also performs "Rooting Feature" for subscribers receiving calls.

MSS(Master SON Server)

MSS is a higher node of Local SON server. It synchronizes with Local SON Server to optimize the synchronization in regards to Multi-LSM. MSS is a function that is compatible with the operator OSS, and the availability of this function will be decided after discussion with operator.

PCRF(Policy Charging & Rule Function)

PCRF may generate policy rule in order to apply "QoS/Billing Policies per each Service Flow" dynamically. Or it may generate Policy rule that is applied uniformly to multiple Service Flow.
Since IP edge contains PCEF(Policy and Charging Enforcement Function), Policy Rules(received from PCRF) can be applied per each Service Flow.

OCS (Online Charging System)

If subscribers (with Online Billing information) makes call, subscriber's billing information is sent/received.

CG (Charging Gateway)

Stores the generated billing data, and provides billing data per each subscriber.

© SAMSUNG Electronics Co., Ltd.

1.3 Samsung Multi-Modal System Feature

Following is the feature supported by each mobile technology of Samsung Multi-Modal System.

1.3.1 CDMA System Feature

Following Figure shows CDMA system(BSC, BTS)based on 1X/1xEV-DO.

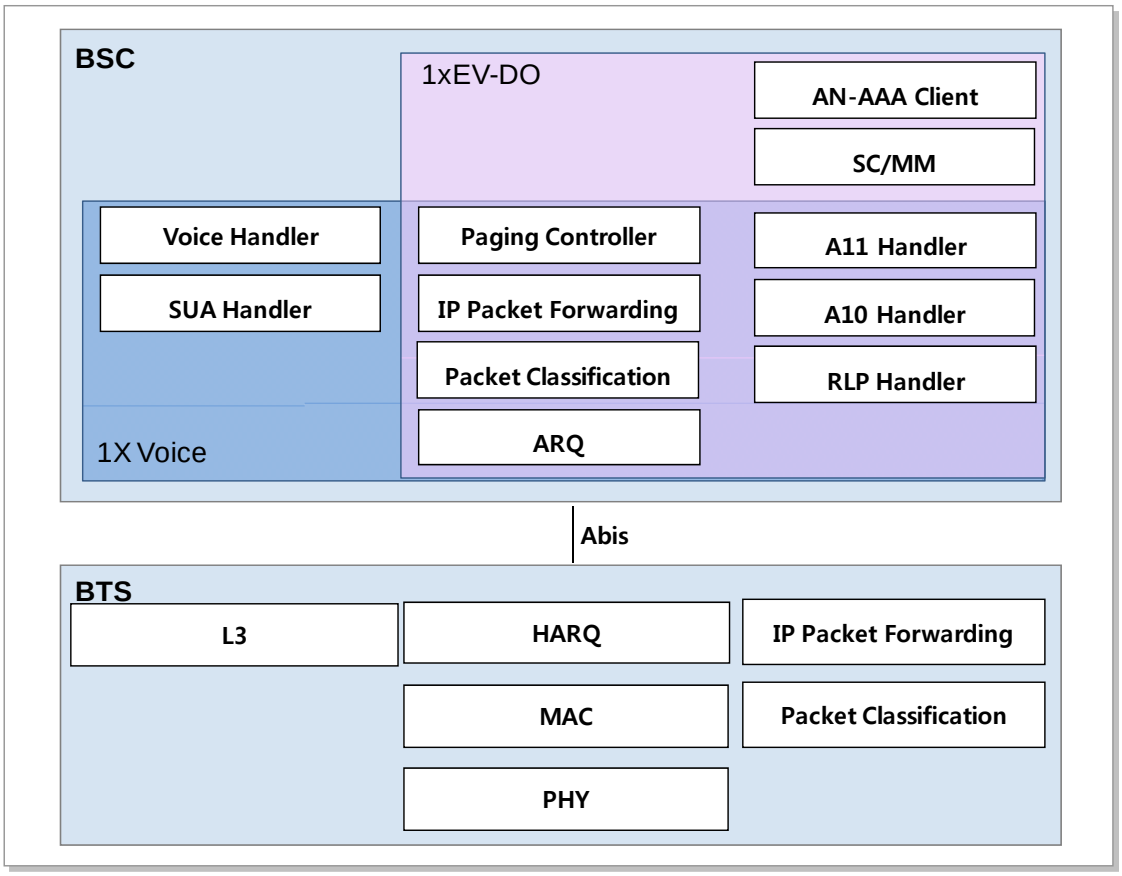

Figure 1.5 CDMA System Functional Structure

BSC works with voice core equipments (MSCe, MGW) to manage signaling and bearer process for voice service. In BSC, SUA Handler is responsible for Alp signaling with MSCe, and Voice Handler sends the voice bearer traffic to MGW. In addition, it works with PDSN for 1X data and 1xEV-DO data service. A10 Handler manages the bearer traffic of such data 1X Data and 1xEV-DO Data service. A11 Handler manages signaling for data service. RLP Handler manages ARQ feature for data communication.
For Authentication of 1xEV-DO terminal, AN-AAA client is responsible for synchronization with AN-AAA. SC/MM executes session control and mobility management for 1xEV-DO.

BTS is responsible for Radio Resource Control and terminal communication. Through CAI(Common Air Interface), it provides features such as high speed data service, multimedia service, new hand off, in accordance with standards defined in 3GPP2 C.S0024-0_v4.0, 3GPP2 C.S0024-A_v3.0, and 3GPP2 C.S0024-B_v3.0, 3GPP2 C.S0063-B_v1.0

1.3.2 LTE System Feature

Following Figure shows functional separation between eNB, MME, S-GW, P-GW of E-UTRAN in accordance with 3GPP standard. Generally, eNB manages “Connected mode” at AS(Access Stratum) level. MME manages Idle mode terminals in NAS(Non-Access Stratum) level. Both S-GW and P-GW performs “user data management” and provide the “link to foreign network”.
Following displays the functionality of eNB, MME, S-GW, and P-GW.

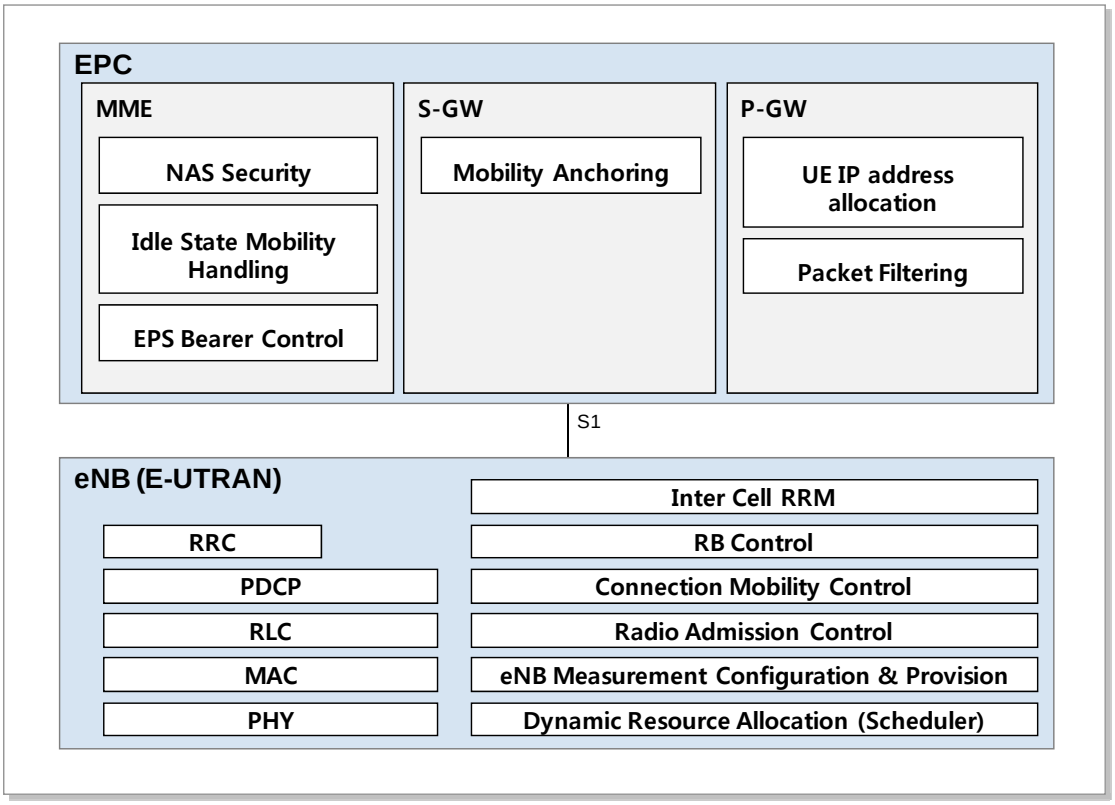

Figure 1.6 Function of E-UTRAN and EPC

eNB

eNB manages E-UTRAN(Evolved UTRAN), the wireless access network of LTE system. Multiple eNB are connected via X2 interface, and these eNB are connected to EPC(Evolved Packet Core) via S1 interface.
Wireless protocol layer of eNB can be divided into Layer1, Layer2, and Layer 3. Layer 3 contains RRC layer, Layer 2 contains three layers(MAC layer(sublayer), RLC layer, PDCP layer) where each layer executes an independent process. RRC layer belongs to layer 3 of the wireless protocol. Generally, RRC Layer is responsible for maintenance and control of RB(Radio Bearer), RRC connectivity, and Exchange of System Data. Meanwhile, PDCP layer is responsible for header compression of IP packet, security features like “ciphering/integrity check”, and “selective transmission feature” which can increase the efficiency of “radio resource”

RLC Layer is responsible a) for segmentation and reassembly at MAC Layer for data which was received from PDCP layer; b) of restoring the tx failure(at lower level) via retransmission (ARQ); and c) of reordering which can be caused because by (HARQ in MAC layer)
For each bearer, MAC Layer distributes RF resources according to priority, multiplexes the data received

 © SAMSUNG Electronics Co., Ltd.

from various “Upper Logical Channels”, and performs HARQ(Hybrid ARQ).

MME(Mobility Management Entity)

MME works in conjunction with E-UTRAN(eNB) to handle “S1-AP signaling message”(of SCTP base; used to control connection between MME and eNB) AND “NAS Signaling message” (of SCTP base; used to control mobility and connection between terminal and EPC.) In addition, it works in conjunction with HSS to obtain subscriber information, modification, and authentication. It can work in conjunction with S-GW, as utilizing GTP-C protocol, to allocate bearer path (for data routing and forwarding, release, and modification)

It can also work in conjunction with SGSN(of 2G, 3G) and MSC to provide Mobility, HO, CS fallback, and SMS service.

MME can handle mobility, idle mode UE reachability, TA list management, P-GW/S-GW selection, authentication, and bearer management.

MME supports mobility for handover between eNB, and supports handover between MME. Also, SGSN selection is supported when it hands over to 2G, 3G, or 3GPP network.

S-GW(Serving Gateway)

S-GW plays role as mobility anchor when handover is executed between eNB, and 3GPP. As a supported function, packet data is “Routed”, “Forwarded”. Billing Policy can be configured differently per each of UE, PDN, and QCN. It can manage and modify the “packet transport layer” of the uplink/datalink data.

In addition, S-GW supports GTP and PMIP protocol in conjunction with MME, P-GW, and SGSN.

P-GW(PDN Gateway)

P-GW can execute Billing/Bearer policy in conjunction with PCRF, and per its policy. Billing, QoS, can be managed/modified per service level. P-GW provides Packet filtering feature per each subscriber, and allocates IP address to each UE. P-GW can manage/modify packet transport layer of the downlink Data.

This page is intentionally left blank.

© SAMSUNG Electronics Co., Ltd.

Chapter 2. Smart MBS Abstract

2.1 Smart MBS System Description

Smart MBS is the Basestation of Samsung Multi-Modal System. It is managed by packet core (either BSC, or EPC), and makes call to terminal to create CDMA/LTE links.

Smart MBS interfaces with UE via either CDMA(3GPP2 CDMA2000 1X Advanced and 1xEV-DO Rev.0/Rev.A), or LTE(3GPP LTE Rel.8/9). It provides broadband high speed data service and multimedia services.
In order to implement this, Smart MBS can perform Modulation/Demodulation (for voice or packet traffic), assign Scheduling and Wireless Bandwidth (for efficient use of RF resources and to guarantee QoS), handle ARQ(Automatic Repeat request), perform ranging feature, provide connection control feature (for sending Smart MBS information and enable/maintain/disable the call), Synchronize BSC/EPC, provides Power Control, and executes system operation management.

By Fast Ethernet/Gigabit Ethernet backhaul, Smart MBS synchronize the control station to transceive reliable control signal and traffic signal.

Smart MBS is separated into UADU(Universal Platform Digital Unit, an indoor DU) and the RRH(Remote Radio Head, a combined RF unit). UADU is mounted in the outdoor DU cabinet(along with the rectifier) to support outdoor environment.

UADU is a digital component for 19” shelf. It can be mounted onto either indoor or outdoor 19 inch commercial rack, and one UADU can provide the following maximum capacity. Based on operator’s setup, it can be operated as omni type or sector type.

- CDMA 1X / EVDO : Max 8Carrier/3Sector(2Br)
  Max 6Carrier/3Sector(4Br)
- LTE (FDD) : Max 5Carrier/3Sector

RRH is RF component that is built into a single module. It can be mounted onto Walls, Poles, or Stands in outdoor environments.

Depending on Frequency bandwidth and duplexing type, RRH can be classified into following types.

- RRH-P4: 1.9GHz PCS band, 4Tx/4Rx RF path

Smart MBS has other features provided as below.

Common Platform DU/RRH

Digital boards of each wireless technology, to be mounted in Smart MBS, share the common DU platform. Therefore, different boards(for multiple technology) may be mounted in a single DU, and operator can mount up to 4 DU in outdoor DU cabinet to implement various configuration.
RRH of Smart MBS can simultaneously support multiple technologies in the same duplexing type with the same bandwidth.

RRH(Remote Radio Head) separated from DU(Digital Unit)

In order to provide ease of installation and various network structure, Smart MBS has separated RRH from DU. Between RRH and DU, a fiber optic 'Baseband I/Q and C&M' interface, based on CPRI(Common Public Radio Interface), is used to send/receive "data traffic signal" and "OAM data". DU and RRH gets -48VDC from rectifier inside the outdoor DU cabinet.

Provide Easy Installation

RRH integrates optic-sync component and RF signal processor, and is a small & light weight single module. RRH can be mounted onto Walls, Poles, or Stands. In addition, distance between RRH and Antenna is minimized that RF signal loss(caused by Feeder Line) is decreased. Therefore, it can provide improved RF performance when compared to Basestation that has Digital Unit and RF Unit altogether.

Natural Cooling Mechanism

RRH(Remote Radio Head) may be installed in outdoor environment, and its thermal-dynamic design efficiently dissipates heat without requirement of additional cooling mechanism. Also, no maintenance cost is required for RRH cooling.

Feature for Loop-Back Test of the line between DU and RRH

In order to check functionality of the "Base-band I/Q and OAM interface" between DU and RRH, Smart MBS provides Loop-back Test.

Provides Remote Firmware Downloading

RRH may be replaced with firmware to enhance service and upgrade new features. At this time, Site visit is not required as firmware can be downloaded from basestation operation server (such as BSM/WSM/LSM-R). Therefore, operator can minimize the site visit, reduce the maintenance cost, and easily operate the system.

RRH may be replaced with firmware to enhance service and upgrade new features:
The remotely operated firmware which is able to downloading without visiting the site cover the functional software only like as RRH alarm, maintenance, security.

The Firmware downloading related RF Specification for RRH has a security system which could be accessible by manufacturer, only.
And, this could only be programmed through specific equipment or software in a factory.

© SAMSUNG Electronics Co., Ltd.

Provides Monitoring Port.

Through debug port of RRH, operator can monitor the information about the unit.

Support for Smooth Migration

Smart MBS can provide migration from CDMA to 4G(LTE)wireless telecommunication by either adding “traffic processor card and channel card” or “software upgrade”.
In case of RRH, in the same frequency band, simple Software upgrade would allow conversion into 4G wireless telecommunication. Also, simultaneous operation of 3G and 4G is possible.

Furthermore, following are the Smart MBS features per each wireless technology.

2.1.1 Smart MBS CDMA System Feature

Support for 1X Advanced

In order to improve voice capacity and data rate, Smart MBS supports “1X Advanced”.
In case of “1X Advanced”, EVRC-B, RLIC, QOF, New RC, QLIC, and MRD are implemented for voice capacity enhancement.

QChat

Smart MBS supports QChat(Qualcomm Chat) which is a PTT service that is based on 1xEV-DO. For QChat service, BSC/BTS runs in conjunction with QAS(QChat Application Server) and PDSN to exchange “signaling and bearer traffic” with terminal. QChat can support 1:1 call and group call, and reserve QoS(Quality of Service).

Provides Dual Band

Dual band is a feature that allows single basestation to provide different services in 2 different RF bandwidths. Smart MBS can simultaneously provide service on 800MHz band and 1.9GHz band. With exception of RRH, Smart MBS can utilize entire hardware to be shared for 2 bands. Smart MBS’s Digital Unit can provide up to maximum capacity of 12 Carrier/3 Sector(2Br) or 6Carrier/3Sector(4Br). For 1.9GHz, Smart MBS supports 4Br.

Tx/RX Diversity Support

In order to improve RRH-P4, Smart MBS optionally provides TDTD(Time Delay Transmit Diversity) feature that will transmit “CDMA Modem output of 1Tx” from “RF path of 2Tx”.
Also, in order to improve receive performance, d RRH-P4 provides 2 Branch receive diversity (which provides 2 receive path per each sector) as a standard. Optionally, Operator may choose that RRH-P4 can provide 4 Branch receive Diversity which will provide 4 receive paths.

2.1.3 Smart MBS LTE System Feature

OFDMA/SC-FDMA Technology

Smart MBS can handle downlink OFDMA/uplink SC-FDMA channel processing that supports the

Physical Layer of LTE standard.

Downlink OFDMA can use sub-carrier, which are assigned to each subscriber, to simultaneously send data to multiple users. Also, in accordance with the requested data transfer rate, it can assign single(or multiple) sub-carrier to particular subscriber for data transmission. Also, when entire sub-carriers are shared by multiple subscribers, OFDMA can dynamically determine well-matched sub-carrier for each subscriber, so that resource can be assigned efficiently to enhance data throughput.

Uplink SC-FDMA is basically similar to Mod/Demodulation algorithm of OFDMA. However, DFT process is handled per each subscriber during Tx Modulation, then on contrary, IDFT process is handled during Demodulation to minimize potential PAPR that can occur during the transmission. Also it is responsible for assigning the particular frequency resource to particular subscriber continuously. As a result, it will reduce the power that is dissipated by terminal.

Support for Broadband Channel Bandwidth

Smart MBS provides wide bandwidth of up to 20MHz and high speed/high capacity packet service.

Support for MIMO

Smart MBS uses multi antenna to support 2x2 or 4x4 MIMO. MIMO has following algorithms

- SFBC (Space Frequency Block Coding)-Downlink
  Increases Link Reliability, This technology implements STBC(Space Time Block Coding) on frequency domain rather than time domain.
  a) 2 Tx Case : STBC(Alamouti codes) algorithm is used.
  b) 4 Tx Case : SFBC and FSTD(Frequency Switched Transmit Diversity) are used together.

- SM (Spatial Multiplexing)-Downlink
  This algorithm sends different data to different antenna path to increase peak data rate. (each path uses same time/frequency resource)
  a) SU(Single User)-MIMO: This is the SM between Basestation and single UE. It increases the peak data rate of a single UE.
  b) Open-loop SM: If channel changes often, or channel information is not available because UE travels in high speed, this is the SM algorithm that works without PMI(Precoding Matrix Indicator) feedback.
  c) Closed-loop SM: If channel information is available because UE travels in low speed, this is the SM algorithm(codebook-based precoding) that works after receiving UE's PMI(Precoding Matrix Indicator) feedback from basestation.

- UL Transmit Antenna Selection-Uplink
  This is the algorithm (Closed-loop selection of Tx antenna) that indicates terminal to use 1 RF chain, 2 Tx antenna, and which antenna to use.

- MU(Multi-User) MIMO or Collaborative MIMO-Uplink
  There is no increase in peak data rate, but this algorithm increases the total cell throughput. This is

© SAMSUNG Electronics Co., Ltd.

SM algorithm in which 2 terminals use the same time/frequency resource for UL, where basestation use single Tx antenna, and two orthogonal terminals are used.

NOTE

System feature and projected date to deliver new feature

For each feature described in this system description and its projected delivery, please refer to the additional document.

2.2 Smart MBS Main Feature

Smart MBS is a basestation that supports CDMA/LTE technology which provides physical layer, and call processing feature. Regardless of the operated technology, IP processing feature and operation/maintenance feature is integrated.

2.2.1 Physical layer Processing Feature

2.2.1.1 CDMA Processing Feature

1X & 1xEV-DO

Smart MBS's CDMA operation can be classified into 1X or 1xEV-DO per each carrier.
The purpose of 1X is for voice service while 1xEV-DO is for Data service. Their algorithms have following differences.

Specification	1X	1xEV-DO
Peak data rate	307.2kbps	3.1Mbps
Frame Duration	20ms	26.67ms
Traffic Channel	Fundamental/Supplemental /Dedicated Control Channel	Traffic Channel
BS Tx power	Controlled power	Always Full power
Pilot channel	Continuous pilot	Burst pilot
Channel encoding	Convolution & turbo code	Turbo code
Modulation	BPSK, QPSK	BPSK ~ 16QAM

Channel Encoding/Decoding

Using Convolution Code and Turbo Code, Smart MBS encodes the "downlink packet" which was generated from the upper system. On the other hand, SMART MBS demodulates the "uplink packet" which was received from UE, then decodes it.

Modulation/Demodulation

Smart MBS encodes the "downlink packet" which was received from upper system, and modulates it. On the other hand, Smart MBS demodulates "uplink packet" which was received from UE, then decodes it.

RF Scheduler

Smart MBS provides RF scheduling feature in order to efficiently distribute system's RF resource, and to guarantee system quality. "Call Admission Control(CAC)/ Burst Operation Control(BOC)/ Overload control" feature is provided in case of 1X, but "Proportional Fair/ Round Robin/ QoS Scheduler" is provided in case of DO.

Power Control

© SAMSUNG Electronics Co., Ltd.

In order to maximize the system capacity, smart MBS should control the terminal's power so that minimal "signal to noise ratio" is obtained for each terminal. Throughout such power control, Smart MBS can minimize the noise, provide good voice quality, and provide increased system capacity.

2.2.1.2 LTE Processing Feature

Downlink Reference Signal Generation and Transmission

Reference Signal is used for demodulation of downlink signal at UE, and also utilized for measuring the channel characteristic for scheduling, link adaptation, and handoff.
In case of sending Non-MBSFN, there are two reference signals, namely "cell-specific reference signal and UE-specific reference signal"
Cell-specific reference signal is used for Channel Quality Measurement, MIMO Rank Calculation, MIMO precoding matrix selection, and signal threshold for handoff. For MIMO, different reference signal is sent per each antenna path.

Downlink Synchronization Signal Generation and Transmission

Synchronization signal is used by UE when obtaining the initial synchronization before communicating with basestation. It has two signals, namely Primary Synchronization Signal(PSS) and Secondary Synchronization Signal(SSS). Cell identity information can be identified by synchronization signal. UE can obtain additional information(other than cell information) via Broadcast Channel. Synchronization signal and Broadcast channel are transmitted through the exact center of channel bandwidth of the cell, which is 1.08 MHz band. This is to allow UE to identify cell's basic information(such as cell ID) regardless of basestation's transmission bandwidth range.

Channel Encoding / Decoding

Smart MBS executes channel encoding/decoding function which is designed to correct the error generated on wireless channel environment. LTE uses turbo coding and 1/3 tail-biting convolutional coding. Turbo coding is generally used to send relatively large data of downlink/uplink, while convolutional coding is used for control data transmission(downlink and uplink) or used as broadcast channel.

Modulation/Demodulation

In case of downlink, Smart MBS receive data from upper layer, process it with baseband (of physical layer), and sends it out onto wireless channel. At this time, baseband signal is modulated to higher bandwidth in order to transmit it to longer distance. Also, in case of uplink, basestation receives the data via wireless channel, demodulate it into baseband signal, and decodes it.

Resource Allocation & Scheduling

With LTE, Smart MBS uses multi link scheme. OFDMA is used for downlink while SC-FDMA is used for uplink. Both schemes allocate 2-dimensional(time & frequency) resources into multiple terminals(without overlapping to each other) that communication link is allocated to multiple terminals.
In exceptional case of MU-MIMO mode, same resource can be shared among multiple terminals. Such allocation of resources onto multiple terminal, is referred to as scheduling, and individual scheduler of each cell can process this.
LTE Scheduler of Smart MBS can analyze channel environment of each terminal, demanded data transfer

rate, and various QoS to optimize the resource allocation to maximize the cell's total throughput. Also, in order to reduce the interference with other cells, it can exchange information with other cell's scheduler via X2 Interface.

Link Adaptation

Wireless channel condition can change either rapidly or slowly, either improve or deteriorate. When channel's condition can be expected, it can be used to increase the data transfer rate, or maximize the entire cell's throughput. This is called "Link Adaption". Particularly, MCS(Modulation and Coding Scheme) can adjust modulation scheme and channel coding rate at different channel's conditions. For example, good channel environment will utilize high-order modulation(such as 64 QAM) to enlarge the number of transmitted bit per unit symbol, but bad channel environment will utilize low-order modulation and low coding rate to minimize the channel error.
In channel environment where MIMO is supported, MIMO Mode is utilized to either increase the user's peak data rate or cell throughput. In cases when channel condition is incorrectly reported, or if higher ordered modulation or coding rate is used, error can occur. This can be efficiently corrected by Hybrid-ARQ feature.

Hybrid-ARQ (H-ARQ)

H-ARQ is a physical layer retransmission scheme which utilizes stop-and-wait protocol.
Smart MBS executes H-ARQ to minimize the potential impact due to change in either wireless channel environment or noise signal level. It improves throughput by "retranmitting" or "combining" the frame in physical layer.
LTE uses H-ARQ technique based on incremental redundancy(IR), and considers "chase combining(CC)" scheme as one specific method of IR. In case of Downlink, Smart MBS uses asynchronous scheme, but uplink uses synchronous scheme.

Power Control

The purpose of power control is to adjust the power level to transmit particular data rate. Excessive power would cause interference while insufficient power would increase error rate that either retransmission or delay is created.

When compared to the CDMA, power control is not as important in LTE. However, appropriate power control can improve the LTE system's performance.
In case of LTE uplink, SC-FDMA does NOT create near-far problem as in CDMA. However, high power level from nearby cell can still deteriorate the uplink performance. Therefore, UE should transmit with appropriate power level to prevent it from radiating interference to nearby cells. In case of LTE uplink, UE's power level may be adjusted to lower "inter-cell interference level". In case of Downlink, Smart MBS can transmit with appropriate power depending on terminal's location and MCS so that inter-cell interference can be minimized. As a result total cell throughput can be improved.

MIMO

In order to provide high performance data service, Smart MBS supports various types of MIMO through multi Antenna(2Tx/2Rx or 4Tx/4Rx) of RRH as described in above section 2.2.3

© SAMSUNG Electronics Co., Ltd.

2.2.2 Call Processing Feature

2.2.2.1 CDMA Processing Feature

Call Process and RF Resource Allocation Feature

Smart MBS allows UE to connect to, or disconnect from the network.
When UE is either connected or disconnected from the network, Smart MBS communicates with UE using "3GPP2 1X/1xEV-DO interface", or communicates with BSC using "Samsung proprietary standard interface", to exchange signaling messages required for call processing.

Execution of Handoff

Smart MBS provides feature to process signaling (required for softer hand-off between sectors, and soft/hard handoff between basestations) and bearer. Softer handoff is performed between different sectors of the same basestation. Also, handoffs between basestations are performed in conjunction with BSC.

CAC (Call Admission Control) Feature

In order to maintain efficient use of RF resources and high performance service, Smart MBS provides feature for mobile terminal or basestation to accept/deny the demand for wireless resource allocation. Also, to accept particular RF resource demand, it may modify the characteristics of different wireless resources.

2.2.2.3 LTE Processing Feature

Cell Data Transmission Feature

Smart MBS should periodically send MIB(Master Information Block) and SIBs(System Information Blocks) within the cell region, that the UE (which received this information) will be able to execute appropriate call processes.

Call Control and Wireless Resource Allocation Feature

Smart MBS allows UE to either connect to, or disconnect from the network.
Via Uu interface (for UE) or S1 interface (for EPC), Smart MBS exchanges signaling messages required for call processing at UE's network entry or release.
Smart MBS should execute the call control and resource allocation that is necessary for UE during network entry. Then, at network release, it should collect the previously assigned resource, and release it.

Execution of Handover (HO)

Smart MBS can support intra frequency, inter-frequency, or intra-eNB cell HO, X2 HO between eNB, S1 HO between eNB, and executes signaling and bearer processing feature required for HO. HO related messages are transmitted via following interfaces : Intra-eNB HO via interface inside eNB, X2 HO via X2 interface, and S1 HO via S1 interface.
At X2 and S1 HO, Smart MBS executes data forwarding feature in order to minimize the traffic interruption. Source eNB provides 2 schemes i) of direct forwarding using X2 interface, or ii) of indirect

forwarding using S1 interface, to forward to target eNB. Via Data forwarding, smart MBS should make sure that UE receives the traffic without interruption during the HO.

AC(Admission Control) Feature

For Bearer Setup request from EPC, Smart MBS should provide the admission control(based on QoS) that system is not overloaded. Capacity and QoS based admission control is executed as follows.

- Admission control based on capacity
  This contains the threshold for the maximum number of UE (new call/handover call) and the maximum number of bearer. When the requested call is accepted, number of UE and number of Bearer will need to be compared to the threshold before the acceptance is confirmed.
- Admission control based on QoS
  In accordance with the estimated PRB usage of newly requested bearer, PRB usage statistics of the bearers in service, and maximum capacity of PRB(per bearer type, per QCI type, UL/DL), Smart MBS determines the call acceptance.

RLC ARQ Feature

Smart MBS can execute ARQ feature only for RLC AM(acknowledged mode). At packet data exchange, RLC should divide the SDU into RLC PDU unit, before sending it. Depending on the received ARQ feedback data, RLC should retransmit the packet to improve the reliability of data communication.

QoS Support Feature

Smart MBS should receive QCI(QoS Class Identifier) which defines QoS characteristics, GBR, MBR, AMBR(Aggregated Maximum Bit Rate) from EPC. Also, it should provide QoS between wireless interface between UE and eNB, and on the backhaul between the eNB and S-GW.
Wireless interface should perform retransmission in order to satisfy “rate control based on GBR/MBR/AMBR values”, “bearer priority defined in QCI”, and “scheduling considered packet delay budget”, and “PLER(Packet Loss Error Rate)”.
For QoS in Backhaul, “Packet classification(QCI based)”, “QCI to DSCP mapping”, and “marking” should be executed. Queuing should be provided in accordance with the result of the mapping, and each Queues should send the packets to EPC per strict priority.
In case of EMS, other than the previously defined QCI, configuration for operator specific QCI and QCI-to-DSCP mapping can be configured.

2.2.3 IP Processing Feature

IP QoS Feature

Smart MBS should support DiffServ(Differentiated Services) that backhaul QoS can be provided when communicating with control stations such as BSC /EPC.
Smart MBS can support Diffserv of 8 class, and also can support the mapping between “user traffic service class” and “DiffServ Service class”.
In addition, Smart MBS can support the mapping between “DSCP (Differentiated Services Code Point)” and “802.3 Ethernet MAC service”.

© SAMSUNG Electronics Co., Ltd.

IP Routing Feature

Since Smart MBS provides multiple Ethernet interfaces, it stores the IP packet's routing information(what Ethernet interface to use) into routing table.
Smart MBS's Routing table is enabled by operator's configuration, its configuration method is similar to router's standard configuration method.
Smart MBS only supports static routing, and it does not provide routing feature for traffics received from external network.

Ethernet/VLAN Interface Feature

Smart MBS provides Ethernet interface, and supports "static link grouping feature", "VLAN(Virtual Local Area Network) feature", and "Ethernet CoS" feature in accordance with IEEE 802.3ad. At this time, MAC bridge feature(IEEE 802.1D) is omitted.
Smart MBS can configure multiple VLAN ID on single Ethernet interface. In order to support Ethernet CoS, DSCP value and CoS value(of Ethernet header) is mapped on Tx packet.

2.2.4 Convenient Operation and Maintenance Feature

In conjunction with management system, Smart MBS executes System initialization and reset, system configuration management, operation parameter management, system resource and service alarm/status management, statistics management for system resource and various performance data, diagnostic management for system resources and services, and system access and security management.

Graphic and Text based Interface

Samsung Multi-Modal System has management server as BSM/LSM which utilizes DBMS(Database Management System) to manage CDMA access system, and LTE system. Smart MBS is managed with such operational servers.
Operational servers provide graphic and text based interface for intuitive and convenient use of operation and maintenance.

Also, operators can use graphic and text based interface to display information, configure, and access alarm status via various commands on Smart MBS. However, for resource GROW, DEGROW, or neighbor list configuration where several NE needs to be configured, each of the respective BSM/LSM-R should to be used to make such changes.

Operator Authentication Feature

Smart MBS provides authentication and restricted management feature for operator who manages Samsung Multi-modal system. Operator can access Smart MBS via console terminal with ID and Password, and Smart MBS acknowledges corresponding user's operation level. Smart MBS logs the history at access success, failure, or login.

Maintenance Feature with Improved Security

When communicating with BSM/LSM-R, Smart MBS supports SNMP(Simple Network Management Protocol version), FTP and SFTP(SSH File Transfer Protocol) for security. When communicating with

console terminal, it supports HTTPs(Hyper Text Transfer Protocol over SSL), and SSH(Secure Shell).

For operation and maintenance, Smart MBS provides secured management features for display and configuration for operational parameter, alarm status management, statistics for various performance data, diagnostics for resource and services, call trace, and system access and operation.

On-line Software Upgrade

When Software package is upgraded, Smart MBS can upgrade the package while the existing software package is running. Package upgrade is processed as 'new package download(Prepare) => Change to new package(Change)=>Remove the former package(Complete)'.
At package upgrade, since existing process needs to be terminated during 'change to new package' step to allow new process to run, service is temporarily interrupted. However, since OS does not need to be reset, service can be provided within few minutes.
After Software upgrade, Smart MBS should update package stored in the nonvolatile storage. Also, Smart MBS may re-execute the 'change to new package' step to roll back to the package prior to the upgrade.

Call Trace Feature

Smart MBS can support call trace feature for specific UE(User Equipment)
Operator can configure trace for specific UE via BSC/MME. At this time, trace result(such as signaling message) are sent to operational server (such as BSM/LSM-R).

TCA(Threshold Cross Alert) Control

Operational Servers such as BSM/LSM-R defines under/over threshold for statistical items. If the total statistical values(obtained periodically per configured Bucket interval : 15, 30, or 60 min) are smaller than under threshold, under TCA alarm is triggered. If it is greater than over threshold, over TCA alarm is triggered. Per classification of each statistical group, TCA can configure threshold per each severity.

IEEE 802.3ah

Smart MBS provides IEEE 802.3ah Ethernet OAM feature for backhaul interface. Although IEEE 802.3ah OAM is considered as PHY layer, it is located in MAC layer to allow it to be applied to entire IEEE 802.3 PHY layer. As defined in the standard, it generates and processes 802.3ah OAM frame.

Ethernet OAM features include discovery (which discovers each other's link, continuously monitors connectivity, and sends major link event such as "Dying Gasp"), remote loopback, link monitoring(which monitors error packets to send event notification if it is greater than the threshold), variable retrieval for 802.3ah standard MIB.
Smart MBS supports 802.3ah Ethernet OAM passive mode features including "response and loopback mode for 802.3ah OAM feature which is triggered from external Active Mode entity", and "event notification transmission".

© SAMSUNG Electronics Co., Ltd.

OAM Traffic Throttling

Per operator's command, Smart MBS provides feature that can limit the OAM related traffic which can be caused from system. At this time, the target OAM traffic includes "alarm trap message" which is used for alarm report, and periodically collected statistical file.

In case of alarm trap, operator can use alarm inhibition command to limit the alarm for entire system alarm or particular alarm traps. Therefore, amount of alarm traffic can be controlled. In case of statistical file, operator can use statistics collection command to disable the collection feature, and adjust the size of statistical file.

2.3 Smart MBS Specification

Capacity

Smart MBS can provide the following capacity.

Classification	System Capacity
Channel Bandwidth	CDMA : 1.25MHz LTE : 5MHz/10MHz
RF Bandwidth	CDMA/LTE FDD : 1,930MHz~1,995MHz(DL), 1,850~1,915MHz (UL)@ PCS Band
Number of maximum Carrier/Sector Per each UADU	CDMA : 8Carrier 3Sector(2Br) or 6Carrier 3Sector or mix LTE : 5Carrier 3Sector @ 5MHz channel BW
Number of UADU per DU cabinet	Maximum 4
Backhaul Interface	100/1000Base-T 1000Base-SX/LX
Air Technology	2Branch or 4Branch Rx diversity - CDMA : 1Tx or TDTD - LTE : MIMO (2 x 2, 4 x 2, 4 x 4)
Output	Per Antenna Port CDMA Normal : 20W/Carrier for SIMO or (10W+10W)/Carrier for TDTD Power Boost : 40W/Carrier(1x:20W +EV-DO: 20W) LTE FDD Normal : 10W/Carrier for MIMO Power Boost : 40W/Carrier for MIMO
Optional	High Power Mode (3dB Power boosting)

NOTE

RF Output

Output of LTE can change depending on channel bandwidth.

NOTE

High Power Mode (3dB Power Boosting)

High Power Mode of CDMA supports 20W+20W/Carrier output at TDTD mode.

Power Input

Following is the power specification for Smart MBS.

© SAMSUNG Electronics Co., Ltd.

Type	Standard
Board and Module Input Voltage [a)]	-48 VDC (Voltage Variation Range: -40~-56 VDC)

a) UADU(Digital Unit) and RRH(Remote Radio Head) are supplied with -48VDC power from DU cabinet's rectifier.

Rack Dimension and Weight

Following is dimension and weight of the Smart MBS.

Type		Standard
Dimension	DU(Digital Unit)	434(W) x 385(D) x 88 (H) mm
	RRH (Remote Radio Head)	RRH-P4 : 227.5(W) x 350(D) x 604(H) mm
Weight	DU(Digital Unit)	Approximately. 12kg
	RRH (Remote Radio Head)	RRH-P4 : 27kg

[Note] Smart MBS's Outdoor DU cabinet has following dimension and weight.
- Dimension : 700(W) × 1035(D) × 1800(H)
- Weight : 251kg or less(Except DU)

Environmental Requirements

Following indicates temperature, humidity, and other environmental requirements where Smart MBS can be operated on.

(1) DU (Digital Unit)

Type	Range
Temperature [a)]	0~50˚C(32~122˚F)
Humidity [a)]	5~90% Assuming 1kg of air contains water vapor NOT exceeding 0.024 kg.
Altitude	-60~1,800 m(-197~6,000 ft)
Vibration	GR-63-CORE Sec.4.4 - Earthquake - Office Vibration - Transportation Vibration Zone 3 Zone 4 (After installing guide rail at the bottom)
Sound Pressure Level	At 1.5 m height, 0.6 m distance, it should be less than or equal to 60 dBA
EMI	FCC Title47 Part 15 Class A

a) For temperature/humidity, measurement is in reference to 1.5m(59 in.) above the ground, and 400mm(15.8in.) away from the front of DU.

© SAMSUNG Electronics Co., Ltd.

(3) RRH-P4(1.9GHz)

Type	Range
Temperature [a)]	-40~55°C(-40~131°F) without solar load
Humidity [a)]	10~95% Assuming 1kg of air contains water vapor NOT exceeding 0.024 kg.
Altitude	0~1,800 m(0~6, 000 ft)
Vibration	GR-63-CORE Sec.4.4 Earthquake Office Vibration Transportation Vibration
sound pressure level	At 1.0 m(3 ft) height, 1.5 m(5 ft) distance, it should be less than or equal to 65 dBA
EMI	FCC Title47 Part 15 Class B
US Federal Regulation	FCC Title47 Part 24

a) For temperature/humidity, measurement is in reference to 1.5m(59 in.) above the ground, and 400mm(15.8in.) away from the front of RRH.

2.4 Backhaul Interface Operation

Smart MBS can support backhaul standard of Copper (Ethernet), Optic (Ethernet).
Smart MBS only supports Ethernet(optic and copper) and T1 interface. If operator wishes to use Microwave backhaul, Smart MBS should place the microwave equipment in the DU cabinet's internal auxiliary space to support microwave backhaul.

Interface Type		Number of port per each board
CDMA	100/1000Base-T	1
	1000Base-SX/LX	1
LTE	100/1000Base-T	2
	1000Base-SX/LX	2

Smart MBS provides the function where multiple communication technology is utilizing a single backhaul network. In order to overcome potential issue due to this, following mechanisms are supported.

- Scheme to separate network per RAN technology
: Scheme to assign different VLAN ID per each RAN technology, and separate it into different logical NW.
- QoS Feature
: Ethernet CoS and Deffserv Feature
- Minimal Traffic interference between RAN technology
: Traffic shaping feature per each RAN technology

For Cell Sites with Smart MBS, in some cases, CSR(Cell Site Router) is mounted within the auxiliary space within the DU cabinet. In this case, backhaul interface aggregation is provided by CSR.
Ethernet interface is "static link aggregation" based on 802.3ad(static), and multiple links are operated.

The interface for general user traffic is shared to provide the interface for operation and maintenance, and is operated as in-band method.

© SAMSUNG Electronics Co., Ltd.

Chapter 3. Smart MBS's Hardware Structure

Smart MBS is designed in a divided architecture that consists of UADU(digital unit) and RRH(combined RF module). UADU can be mounted on 19 inch outdoor or indoor commercial rack, RRH can be mounted on walls, poles, or stands.

NOTE

Outdoor DU cabinet

For Outdoor DU Cabinet and its specification and diagram, refer to 'Installation Manual'.

DU

UADU consists of Digital board, FAN, and backboards. UADU consists of combination of the following digital boards.

- CIMA-A(CDMA Management board Assembly-Type A)
  : CDMA main processor board
- UAMA-A41(Universal Platform Management board Assembly-Type A41)
  : LTE main processor board
- CICA (CDMA IP Channel card board Assembly)
  . CICA-A: CDMA 1X Advanced Channel Card
  . CICA-D: CDMA 1X Advanced & DO rev.0/rev.A Channel Card
- L9CA (LTE eNB Channel card board Assembly)
  : LTE Channel Card

UADU allows OAM for Smart MBS, allows Smart MBS to synchronize with upper controllers(BSC/EPC) and packet core, and provides communication paths between each processors within the system. UADU receives synchronization signal from GPS, create signal for system synchronization(such as reference clock, Even, SFN(System Frame Number), or TDD), and supply this to lower hardware blocks.
UADU interfaces with RRH to exchange data traffic, and executes signal processing for subscriber signal. Also, UADU can receive alarm from external devices (such as RRH, lower module, rectifier, or battery), and control them.

Figure 3.1 UADU Configuration - CDMA Single mode

Figure 3.2 UADU Configuration - LTE Single mode

Figure 3.3 UADU Configuration - CDMA + LTE dual mode

RRH

The UADU(which is the DU unit of Smart MBS) and the RRH(which can be synchronized) can be classified into 3 types depending on the operating frequency, and duplexing technique.

- RRH-P4 : 1,930~1,995MHz (DL), 1,850~1,915MHz (UL), FDD, 4Tx/4Rx

RRH is a RF combined module. It is physically isolated from UADU, but synchronized through a fiber optic cable. RRH is mounted right before the antenna.

In case of Downlink, RRH converts the data traffic, 'Digital I/Q and C & M'(received from UADU), into RF signal to send it via external antenna. At this time, the Transmit RF power from antenna ports is as follows.

- RRH-P4 : 20W/Carrier for SIMO or (10W+10W)/Carrier for TDTD @ CDMA
  (10W x 4Tx)/Carrier @ LTE FDD 5MHz/10MHz channel BW

In case of uplink, on the other hand, RRH converts the received RF signal into 'Digital I/Q and C & M' data traffic, to send it to UADU.
Via 'Digital I/Q and C & M' interface, RRH receives UADU clock information, and exchanges alarm and control messages.

© SAMSUNG Electronics Co., Ltd.

Figure 3.5 RRH-P4(1.9GHz)

3.1 Internal System Architecture

Following is the internal block Figure for each communication technology of Smart MBS.

3.1.1 CDMA Internal System Architecture

Figure 3.6 Smart MBS CDMA Internal Block Diagram

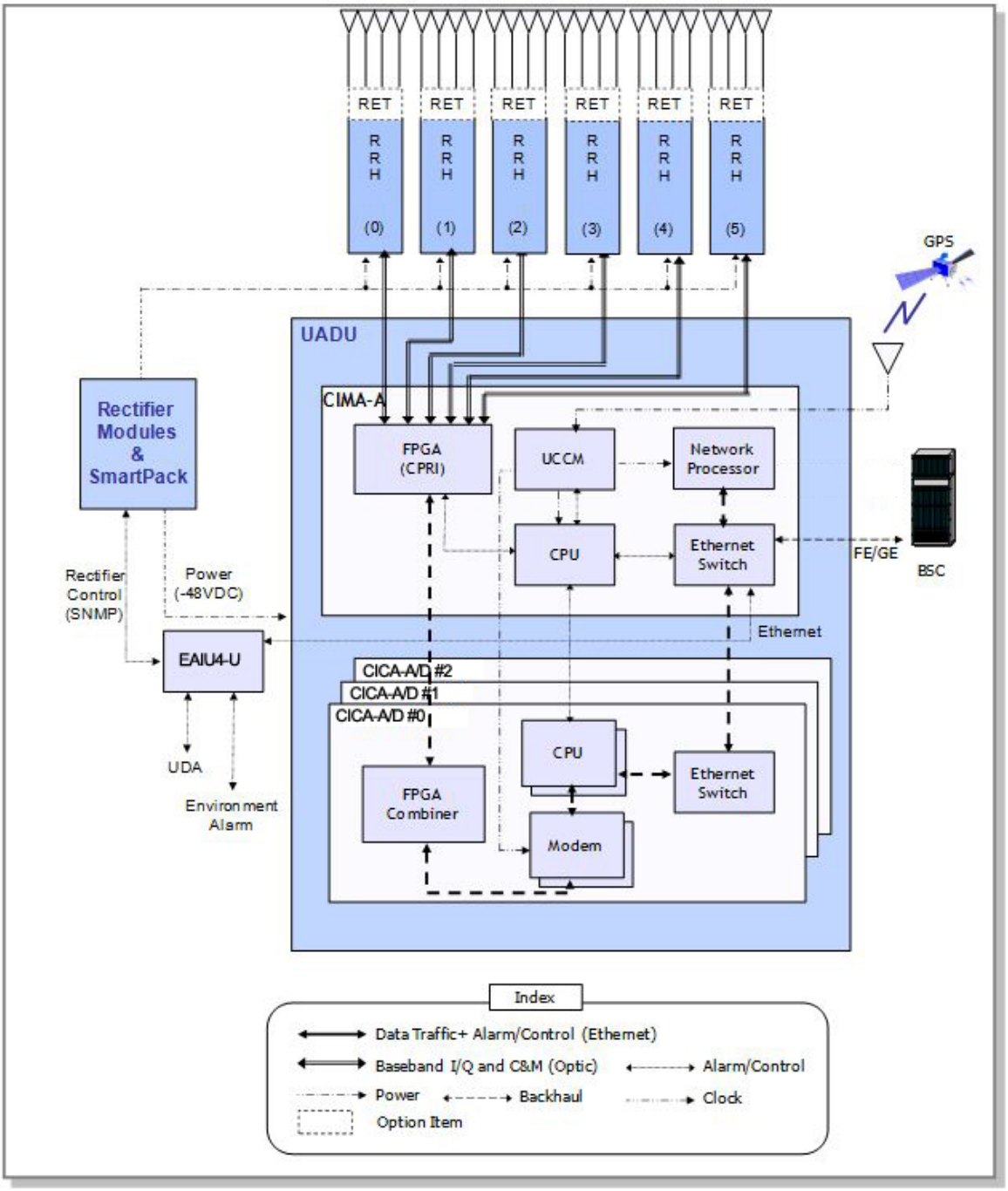

© SAMSUNG Electronics Co., Ltd.

A. CDMA Traffic Architecture

Transmit path

When User Data is received from BSC via Public Network, it goes through Network Synchronization Module, and sent out to CICA via Ethernet Switch of CIMA(Main board).

The transmitted data goes through Digital Processing of the Baseband level, then converted to E/O(Electrical to Optic) in form of [Baseband I/Q and C&M interface] which is based on CPRI interface in CIMA. The converted signal is then sent out to remote RRH. RRH converts the received optic signal via O/E(Optic to Electrical) process. The converted broadband baseband signal is then converted to analog signal, and goes through amplifier for amplification. The amplified signal is then filtered through the band pass filter of the operating frequency, and transmitted.

Receive Path

The RF signal that was transmitted from Antenna is filtered by RRH, and amplified via LNA. This signal then goes through "RF Down-Conversion" and "Digital Down-Conversion" to be converted into baseband signal. This signal is in form of [Baseband I/Q and C&M interface] which is based on CPRI interface, and goes through E/O(Electrical to Optic) conversion once again. The converted signal is then sent to CIMA-A via fiber optic cable, it is converted into Ethernet frame by CDMA baseband signal processor of CICA, and sent to CIMA-A(main board). Finally, it goes through network synchronization module to be sent out to BSC.

B. CDMA Clock Architecture

UCCM of CIMA-A receives GPS signal from external GPS Antenna, and create the necessary synchronization clock, and distributes it into system's hardware blocks.

When CIMA-A is operated with LTE, CIMA-A provides clock to LTE digital boards. CIMA-A provides 10MHz, PP2S, and SFN(System frame number) to each slot via backboard. CICA and LTE Digital boards use this to generate the required clock.

C. CDMA Alarm Architecture

CDMA Alarm is based on CIMA-A. CIMA-A collects the alarm from Smart MBS, and reports it to upper layer, and can provide Board Reset.

SmartPack collects the outdoor cabinet's environmental alarm and battery monitoring information, and report to CIMA-A via EAIU4-U. EAIU4-U is mounted inside the Outdoor DU cabinet to synchronize SmartPack, and collect UDA.

RRH uses CPRI interface to exchange alarm and control signal with CIMA-A.

3.1.2 LTE Internal System Structure

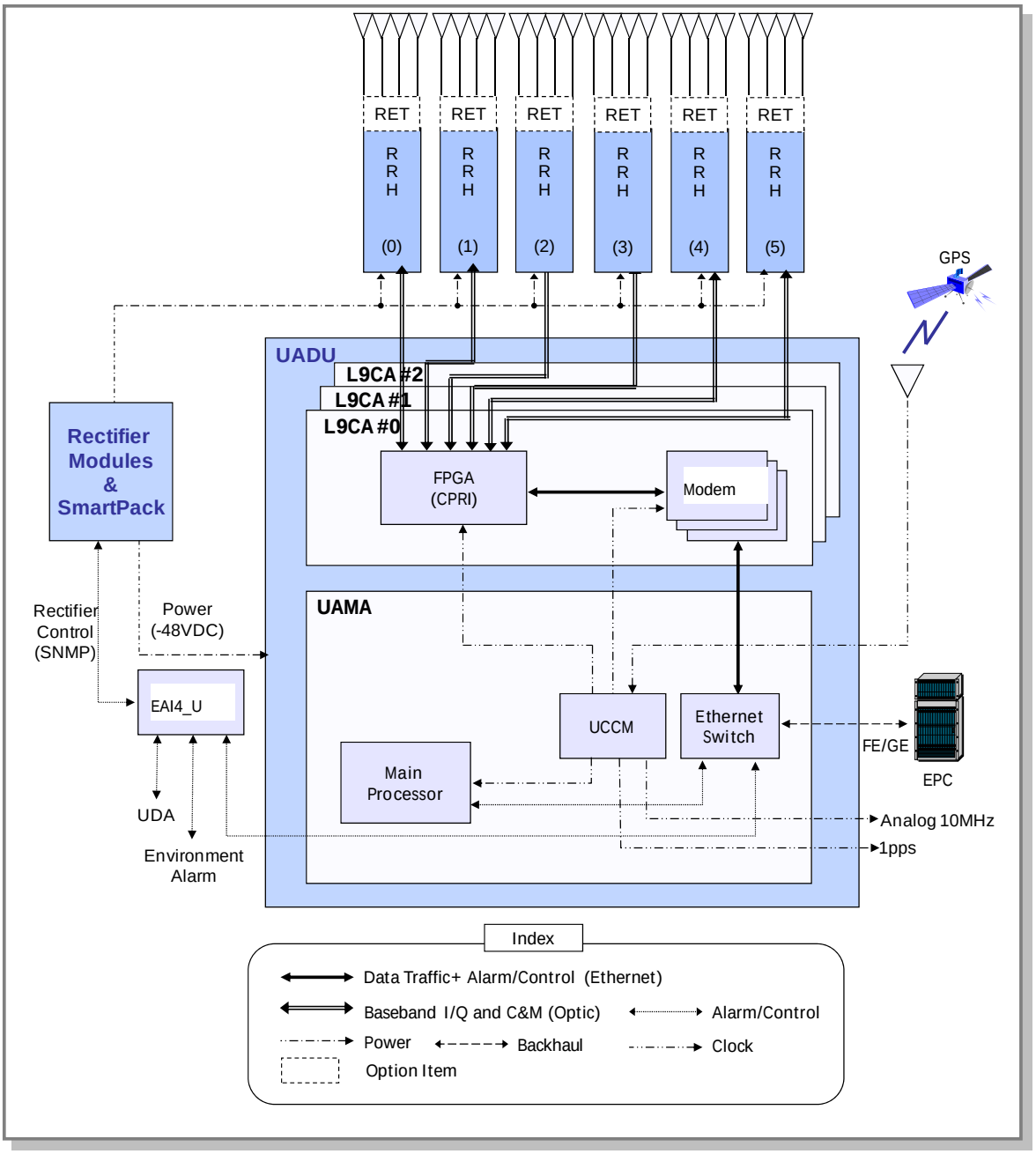

Figure 3.7 Smart MBS LTE's Internal Block Diagram

NOTE

Outdoor Rectifier

Rectifier is mounted inside the Outdoor DU cabinet along with UADU

The interface, between Smart MBS and rectifier, is provided by additional module(EAUI) which collects external environmental alarm of UADU

© SAMSUNG Electronics Co., Ltd.

A. LTE Traffic Architecture

Transmit Path

When User Data is received from EPC via Public Network, it goes through Network Synchronization Module, and sent out to L9CA via Ethernet Switch. The transmitted data goes through Digital Processing of the Baseband level, then converted to E/O(Electrical to Optic) in form of [Baseband I/Q and C&M interface] which is based on CPRI interface. The converted signal is then sent out to remote RRH. RRH converts the received optic signal via O/E(Optic to Electrical) process. The converted broadband baseband signal is then converted to analog signal, and goes through amplifier for amplification. The amplified signal is then filtered through the band pass filter of the operating frequency, and transmitted from Antenna.

Receive Path

The RF signal that was transmitted from Antenna is filtered by RRH, and amplified via LNA. This signal then goes through "RF Down-Conversion" and "Digital Down-Conversion" to be converted into baseband signal. This signal is in form of [Baseband I/Q and C&M interface] which is based on CPRI interface, and goes through E/O(Electrical to Optic) conversion once again. The converted signal is then sent to remote L9CA via fiber optic cable. After the data goes through OFDMA signal processing in L9CA, it is converted into Gigabit Ethernet frame, and sent to EPC via network synchronization module

B. LTE Clock Architecture

UCCM of UAMA receives reference signal from external GPS Antenna, and generate PP2S, Digital 10 MHz, SFN(System Frame Number), and distribute them into L9CA in the system. L9CA then receives PP2s, Digital 10 MHz clock. It should use its own PLL to generate system clock (30.72MHz), CPRI Reference Clock(122.88MHz), and 10msec clock to distribute it to RRH.

At synchronization of UADU and RRH, RRH receives the necessary system clock and sync clock that are required for CPRI interface, from L9CA.

If LTE system is mounted DU Shelf identical to CDMA, it is supplied the clock for operation from CIMA-A

C. LTE Alarm Architecture

LTE Alarm is based on UAMA. UAMA collects the alarm from Smart MBS, and reports it to upper layer, and can provide Board Reset.

SmartPack collects the outdoor cabinet's environmental alarm and battery monitoring information, and report to UAMA via EAIU4-U. EAIU4-U is mounted inside the Outdoor DU cabinet to synchronize with SmartPack, and collect UDA.

RRH uses CPRI interface to exchange alarm and control signal with UAMA.

3.2 UADU(Universal Platform Digital Unit)

UADU is the digital unit of Smart MBS which supports OAM of Smart MBS, synchronization between Smart MBS, BSC(CDMA), EPC(LTE), and RRH(Remote Radio Head). It supports the interface between each processor in the system, alarm collection and control for lower boards including RRH. Also, UADU generates clock, and distribute it to lower hardware blocks. It is responsible for channel processing for subscriber's signal.
When Smart MBS sends signal to UE, UADU should modulate the traffic signal received from the respective controller(BSC/EPC), convert this into optical signal via 'Baseband I/Q and C&M' converter to send it to remote RRH. On the other hand, when Smart MBS is receiving signal from UE, UADU should receive 'Baseband I/Q and C&M' signal from Remote RRH, demodulate it, and send it to controller(BSC/EPC).

Main Function

- Clock generation and Distribution
- Synchronization of Fast Ethernet/Gigabit Ethernet with the controller(BSC/EPC)
- Diagnosis, collection, and control of Alarm
- Alarm Reporting Feature
- Management of Channel Resources
- Baseband Signal processing (Modem)
- Optical Synchronization with RRH(Remote Radio Head) and Loop-back Test function.
- UDA to provide UDE feature and synchronize external devices.

UADU is mainly classified into Cabinet(DU shelf, Fan module, backboard), Main Boards (CIMA for CDMA-A Main Processor board, UAMA for common traffic processor board), and Channel cards for each technology(CICA for CDMA, L9CA for LTE)

© SAMSUNG Electronics Co., Ltd.

Board Name		Quantity (Count)	Function
Back Board	UADB	1	Universal platform Digital Backboard - UADU's Backboard - Handles Signal routing for Traffic, Control, Signal, Clock, and Power.
Main Board	CIMA	1	CDMA Management board Assembly - System management processor - Resource Assignment, OAM - Alarm Collection, and report to BSM - Backhaul Support (GE/FE) - Handles UADU FAN alarm - Provides external environment alarm interface(EAIU4-U Sync) - Generate and Distribute GPS clock (Sync In & out) - Provide Loop-back test between UADU and RRH.
	UAMA	1	Universal platform Management board Assembly - System management, traffic processor - Resource Allocation and OAM - Alarm Collection and LSM Report - Backhaul Support (GE/FE) - Provides non-volatile memory. - Handles UADU FAN alarm - Provide external environmental alarm interface (EAIU4-U Sync) - Provide UDE(User Defined Ethernet), UDA(User Defined Alarm) - Generate and Distribute GPS clock (Sync In & out)
Channel Card	CICA-A	Max. 3	CDMA IP Channel card board Assembly- type A - Handles subscriber signal - 1X, 1X Advanced - Support 1X Adv DL 2560CE/ UL 2048CE per each channel card.
	CICA-D	Max. 3	CDMA IP Channel card board Assembly- type D - Handles Subscriber Signal - 1X, 1X Advanced & EVDO Rev.0/A /B Phase 2 - Support 1X Adv DL 1280CE / UL 1024CE and EVDO DL 284CE / UL 284CE per each channel card
	L9CA	Max. 3	LTE eNB Channel card board Assembly - Call Processing, Resource allocation, and OAM - OFDMA/SC-FDMA Channel Processing - CPRI Optic interface to RRH - Supports synchronization with Optic CPRI RRH (E/O, O/E conversion within CPRI Mux) - Provides Loop-Back test between UADU and RRH.

CIMA-A(CDMA Management board Assembly-type A)

CIMA-A executes function as main processor, GPS signal receiver and clock distributor, and as network interface.

- Main processor feature

  CDMA Main processor of Smart MBS plays role as the highest layer. It is responsible for communication path configuration between UE and BSC, Ethernet Switching functionality for internal Smart MBS, and System OAM.

  Also, it manages entire hardware and software status within the Smart MBS, allocates/manages resources, and report the status information to BSM(BSS System Manager).

- Network Interface Feature

  CIMA-A directly synchronize with BSC via Gigabit Ethernet/Fast Ethernet or T1. In case of Ethernet, 1 Optic and 1 copper port is supported. In case of T1, total 8 T1 ports are supported.

- ternal Interface Feature

  Via Fast Ethernet interface of UADU, CIMA-A can provide paths to external alarm information (such as Rectifier alarm/control, battery monitoring information or UDE/UDA) that is collected by external environmental monitoring device(EAIU4-U)

- Clock Generation and Distribution

  CIMA-A's UCCM generates 10 MHz, Even, and SFN(System Frame Number) based on the sync signal which was received from GPS, and distributes this to the Hardware block of the system. This clock maintains the internal synchronization of Smart MBS, and used for system operation. Also, CIMA-A can provide Analog 10 MHz, 80ms signal as support for external devices such as measurement equipments. UCCM can forward "time data" and "location data" via TOD Path.

  If GPS signal was not received for some reason, UCCM provides holdover feature that can maintain the normal clock for specified time period.

- RRH Optical interface and Loopback Test

  CIMA-A incorporates E/O(Electrical to Optic) Converter and O/E(Optic to Electrical) Converter that remote RRHs can exchange optical 'Digital I/Q and C & M'. In addition, CIMA-A can perform Loopback test in order to check if the interfaces between CIMA-A and RRH, are in normal status.

- Combiner Feature

  CIMA-A provides feature that collects Digital baseband signals which was sent from channel cards, and forwards them to the same RRH. On the other hand, it also provides feature to receive Digital baseband signal from RRH, and distribute it to channel cards.

UAMA (Universal platform Management board Assembly)

UAMA plays role as main processor, GPS signal receiver and distributor, and as a network interface.

- Main Processor Feature

  UAMA, the main processor(for LTE) of Smart MBS plays role as the highest layer. It is responsible for communication path configuration between UE and EPC, Ethernet Switching functionality for internal Smart MBS, and System OAM.

  Also, it manages entire hardware and software status within the Smart MBS, allocates/manages resources, and collect/report the alarm status information to LSM(LTE System Manager).

© SAMSUNG Electronics Co., Ltd.

- Network Interface Feature

  UAMA is Gigabit Ethernet/Fast Ethernet, and it interfaces with EPC.

  Depending on the provided interface, UAMA can be classified as following types, and operator can choose the interface to use.

  – 100/1000 Base-T Copper (RJ-45) 2 Port
  – 1000Base-X SFP(Small Form factor Pluggable) 2 Port

- External Interface Feature

  UAMA can provide Ethernet interface for User Defined Ethernet(UDE) within UADU. Via Fast Ethernet interface of UADU, UAMA can provide paths to external alarm information (such as Rectifier alarm/control, battery monitoring data or UDE/UDA) that is collected by external environmental monitoring device(EAIU4-U). This alarm information is then sent to either WSM or LSM.

- Clock Generation and Distribution

  UAMA's UCCM generates 10 MHz, Even, and SFN(System Frame Number) based on the sync signal which was received from GPS, and distributes this to the Hardware block of the system. This clock maintains the internal synchronization of Smart MBS, and used for system operation. Also, UAMA can provide Analog 10 MHz, 80ms signal as support for external devices such as measurement equipments. UCCM can forward "time data" and "location data" via TOD Path.

  If GPS signal was not received for some reason, UCCM provides holdover feature that can maintain the normal clock for specified time period.

CICA-A (CDMA Advanced Channel card board Assembly – type A)

CICA-A can provide Modem functionality for CDMA 1X Advanced Service.

- Subscriber Channel Process

  Channel card can handle baseband signal for CDMA service. CICA-A can handle Voice and Data signal channel. CICA-A modulates the received packet data, and send it out to CIMA (via backboard), then to RF. On the other hand, it receives RF data from CIMA, demodulates it, and converts it in accordance with the CDMA standard(physical layer standard), and sends it to upper processor.

- CDMA Service Support

  Channel card can support "IS-95" and "CDMA 2000 1X/1X Advanced" service.

- Clock Generation Feature

  CICA-A receives PP2S, Digital 10MHz clocks from CIMA, generates system clocks of 30.72MHz and 1.25ms using its own PLL circuit, and distributes it to internal components(Modem and processors).

CICA-D (CDMA Advanced Channel card board Assembly – type D)

CICA-D can provide Modem functionality for CDMA 1X Advanced service and EVDO.

- Subscriber Channel Processing Feature
  Channel Card can handle baseband signal for CDMA service. CICA-D handles Voice and Data signal channel. CICA-D modulates the packet data (which was received from upper processor), and send it to CIMA via backboard, then to RF. On the other hand, it receives RF data from CIMA, demodulates it, and converts it in accordance with the CDMA standard(physical layer standard), and sends it to upper processor.

- CDMA Service Support
  Channel Card can support "IS-95" and "CDMA 2000 1X/1X Advanced" service. Also, it can simultaneously support CDMA 2000 EVDO service.

- Clock Generation Feature
  CICA-D receives PP2S, Digital 10MHz clock from CIMA, and generate system clock of 30.72MHz, 1.25ms, 1.67ms clocks, and distributes them to internal components(Modem and processors)

L9CA (LTE eNB Channel card board Assembly)

L9CA provides Modem functionality and RRH interface.

- Subscriber Channel Processing Feature
  L9CA modulates the packet data(which was received from upper processor), and sends it to RF via CPRI. On the other hand, it demodulates the data received from RF, converts it into the type defined as in LTE Physical layer standard, to send it to upper processor.

- RRH Fiber Optic Interface and Loopback Test
  L9CA incorporates E/O(Electrical to Optic) converter and O/E(Optic to Electrical)converter that optical 'Digital I/Q and C & M' signal can be exchanged between RRHs. In addition, L9CA can perform Loopback test in order to check if the interfaces between L9CA and RRH, are in normal status.

- Clock Generation Feature
  L9CA receives PP2S, Digital 10MHz clock from UAMA, and generate system clock of 30.72MHz, CPRI clock 122.88MHz clock via its own PLL circuit, and distributes them to internal components(Modem, CPRI FPGA).

According to the supported technology, UADU can be configured as below.
CDMA and LTE boards are mosimultaneously, CIMA-A is mounted at main card location.

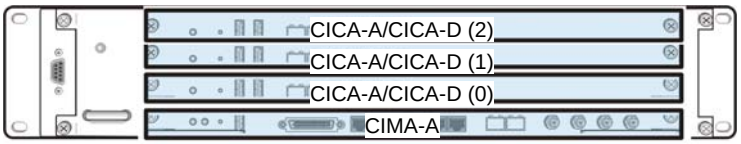

Figure 3.8 UADU Configuration - CDMA Only

© SAMSUNG Electronics Co., Ltd.

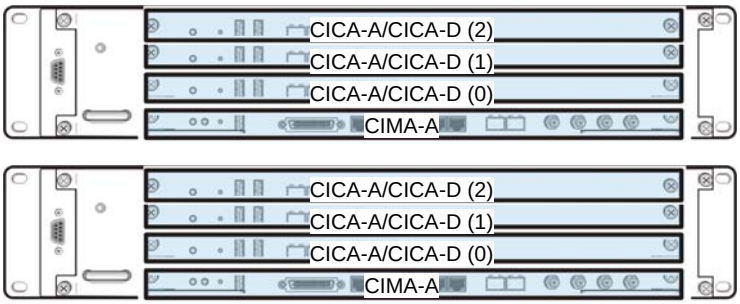

Figure 3.9 UADU Configuration - CDMA Only(Two UADU)

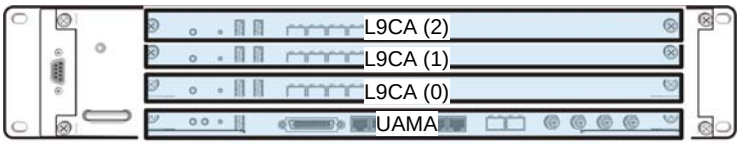

Figure 3.10 UADU Configuration - LTE Only

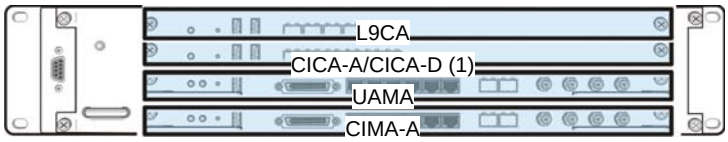

Figure 3.11 UADU Configuration - CDMA+LTE Dual Mode

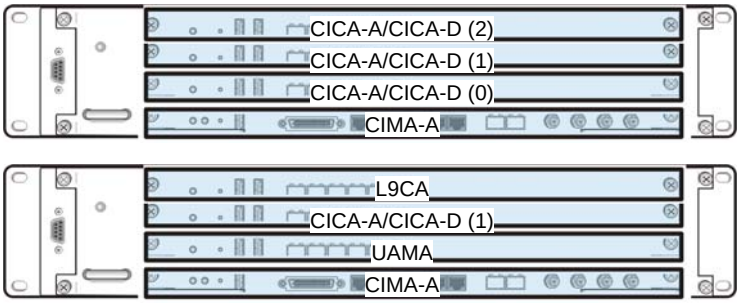

Figure 3.12 UADU Configuration - CDMA+LTE Dual Mode(Two UADU)

3.3 RRH (Remote Radio Head)

RF component of Smart MBS consists of Remote Radio Head(RRH).

RRH is a RF module that interfaces with UADU via optical cable, and it is located before Antenna.

Depending on duplexing technology, RRH is classified into types (FDD), and each type provides following frequency range and number of RF paths.

- FDD RRH : CDMA/LTE FDD
  1) RRH-P4 : 1930 ~ 1995MHz (DL), 1850 ~ 1915MHz (UL), 4Tx/4Rx RF path

RRH provides the following functions.

Main Functions

- Amplification of RF Transmit signal.
- Interfaces with UADU via optical 'Baseband I/Q and C&M'. It interfaces traffic, alarm, control si gnal, and clock data.
- Change to Higher / Lower Frequency
- Transmit/Receive RF signal from Antenna
- Prevents spurious frequencies radiated from Transmit/Receive RF signal.
- Low Noise Amplification of receive RF signal that is band passed.
- FDD Filtering Feature for RF Tx/Rx path. (RRH-P4)
- Remote Electrical Tilting(RET) Feature (Optional)

Maximum output power, per each technology, is listed below.

CDMA

Type	Qnty.	Capacity	RF Path	Antenna Output Power
RRH-P4	Max. 3	8Carrier/1Sector	4Tx/4Rx	20W/Carrier for SIMO or (10W+10W)/Carrier for TDTD

LTE FDD

Type	Qnty.	Capacity	RF Path	Antenna Output Power
RRH-P4	Max. 3	4Carrier/1Sector@5MHz, 10MHz	4Tx/4Rx (MIMO)	10W x 4Tx/Carrier (Total 20W/Carrier) @5MHz,10MHz

In case of downlink signal, RRH receives baseband signal via optical 'Digital I/Q and C & M' from Channel card of UADU, and converts it with O/E(Optic to Electrical). The converted signal is then sent through DAC(Digital to Analog Conversion) to be converted to analog RF signal, and amplified by amplifier. The amplified signal goes through filter and sent to Antenna.

© SAMSUNG Electronics Co., Ltd.

In case of uplink signal, the signal is received after it goes through RRH's filter. It is then sent to LNA(Low Noise Amplifier) to change to lower frequency, and goes through ADC(Analog to Digital Conversion) and get converted to baseband signal. This baseband signal is in 'Digital I/Q and C & M' type. Then, this is converted as E/O, and sent to channel card of UADU.

RRH-P4 (Remote Radio Head – PCS band 4Tx/4Rx)

RRH-P4 is a combined FDD RF module which incorporates digital transceiver (4Tx/4Rx RF path per sector), power amplifier, and duplex filter.

It interfaces with UADU via optical 'Digital I/Q and C & M', and it can support up to four 2.5Gbps CPRI interfaces.

RRH-P4 supports the following configurations.

- Supports CDMA, LTE FDD single mode, or multi mode.
- Supports 4Tx/4Rx RF paths
  - Operates CDMA's 1Tx/2Rx, 1Tx/4Rx, 2Tx(TDTD)/2Rx, or 2Tx(TDTD)/4Rx
  - Operates LTE FDD's 2Tx/4Rx, or 4Tx/4Rx
- Supports 65MHz instantaneous bandwidth.
- Outputs 40W x 4Tx (total 160W)
- Supports RET(Remote Electrical Tilting) Feature

3.4 Cooling Mechanism

3.4.1 Digital Unit (DU)

UADU(The digital unit of Smart MBS) incorporates 1 set of system cooling fan(FANM-C4) to maintain appropriate temperature for shelf, and ensures that system is operated normally even when the external temperature changes .

FANM-C4 contains temperature sensor, and 3 fans which operate according to the measured temperature.

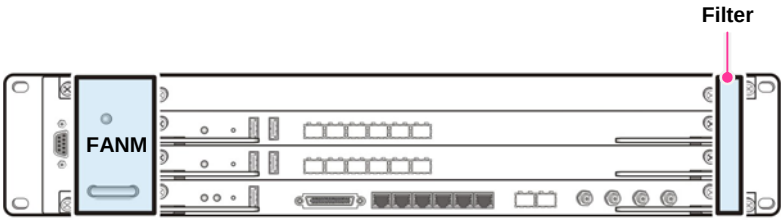

Figure 3.13 UADU's FAN Structure

UADU has following cooling mechanism.

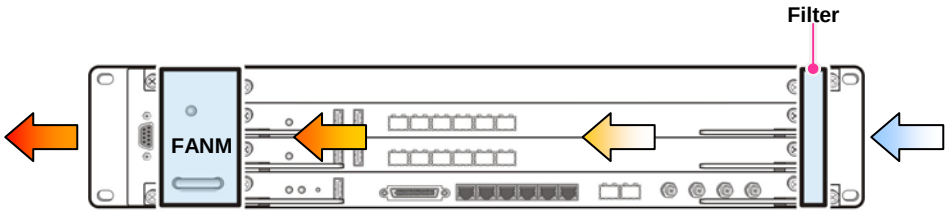

Figure 3.14 UADU's Cooling Mechanism

3.4.2 RRH (Remote Radio Head)

RRH(Remote Radio Head) of Smart MBS is designed with natural cooling mechanism for outdoor environment that it does not require additional fan or heater.

© SAMSUNG Electronics Co., Ltd.

3.5 Interface structure

Following is each unit and board's external interface of the Smart MBS.

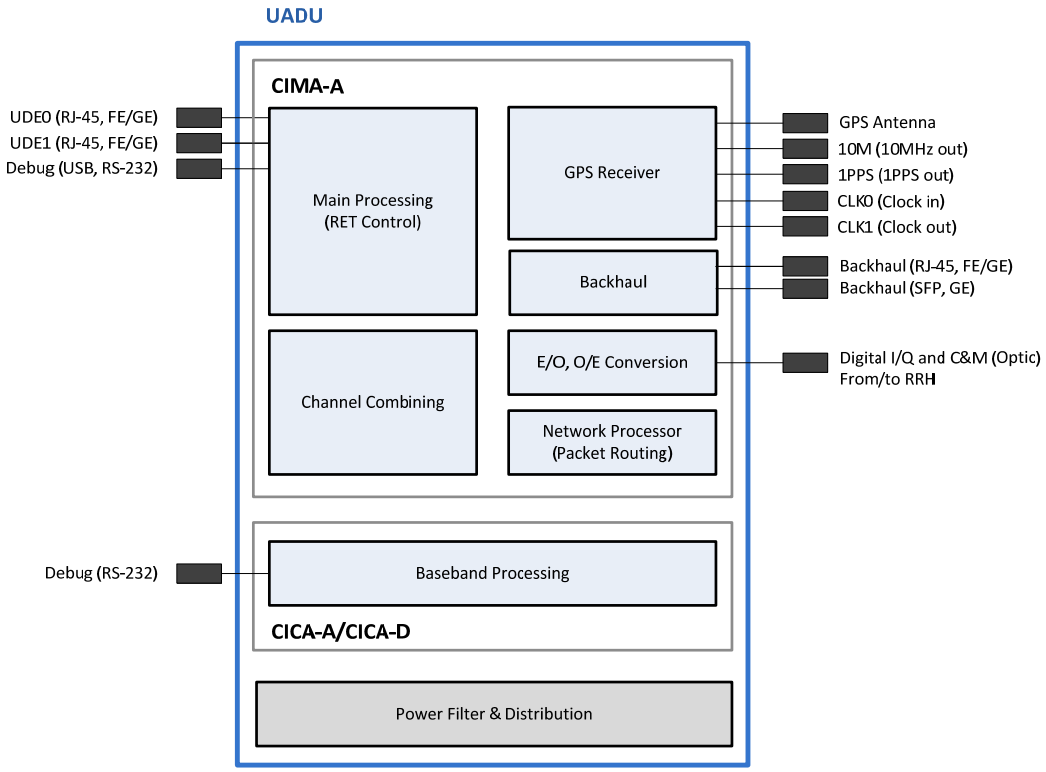

Figure 3.15 HW Interface structure of UADU(CDMA)

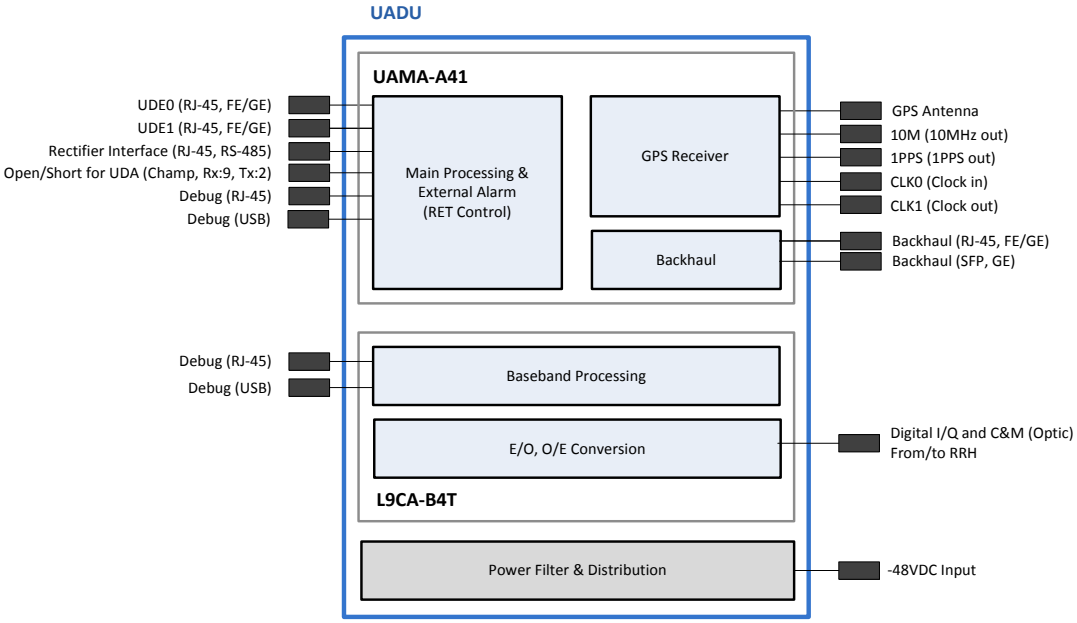

Figure 3.16 HW Interface structure of UADU(LTE)

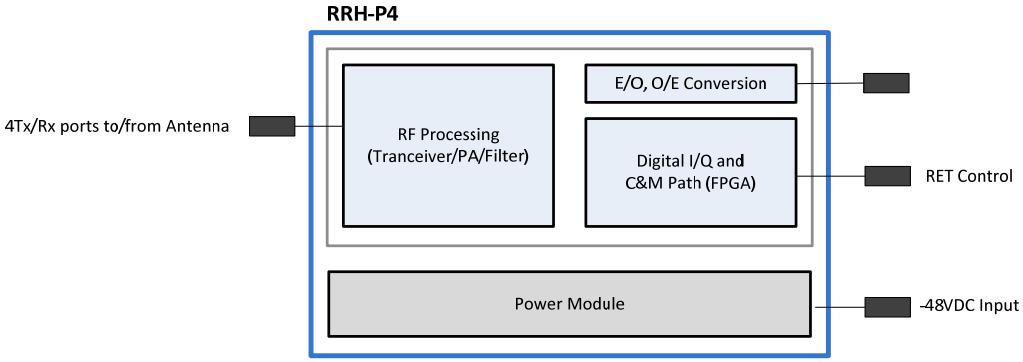

Figure 3.18 HW Interface structure of RRH-P4

External interface of CIMA

Interface Type	Connector Type	Quantity	Description
Copper Backhaul	RJ-45	1	100/1000Base-T
Optic Backhaul	SFP	1	1000Base-LX/SX
UDE	RJ-45	2	User Defined Ethernet (100/1000Base-T)

© SAMSUNG Electronics Co., Ltd.

CPRI	Optic	6	RRH IF (CPRI 4.0)
SW Debug	USB	2	UART CPU/GPS
GPS In	SMA	1	GPS Input (to UCCM)
Ref. Clock Out	SMA	1	Analog 10MHz
	SMA	1	80ms
CLK0	-	1	CLOCK IN
CLK1	-	1	CLOCK OUT
Reset	Reset	1	System reset
LED	LED	2	SYS, GPS

External interface of UAMA

Interface Type	Connector Type	Quantity	Description
Copper Backhaul	RJ-45	2	100/1000Base-T
Optic Backhaul	SFP	2	1000Base-LX/SX
UDE	RJ-45	2	User Defined Ethernet (100/1000Base-T)
Rectifier IF	RJ-45	1	RS-485 1 port
SW Debug	USB	1	UART CPU
	RJ-45	1	100/1000Base-T
UDA	Champ	1	User Defined Alarm (Rx: 9 port, Tx: 2 port)
GPS In	SMA	1	GPS Input (to UCCM)
Ref. Clock Out	SMA	1	Analog 10MHz
	SMA	1	1PPS
CLK0	-	1	CLOCK IN
CLK1	-	1	CLOCK OUT
Reset	Reset	1	System reset
LED	LED	2	SYS, GPS

Interface of CICA-A

Interface Type	Connector Type	Quantity	Description
SW Debug	USB	2	UART Debug
Reset	Reset	1	Board reset
LED	LED	1	SYS

Interface of CICA-D

Interface Type	Connector Type	Quantity	Description
SW Debug	USB	2	UART Debug
Reset	Reset	1	Board reset
LED	LED	1	SYS

Interface of L9CA

Interface Type	Connector Type	Quantity	Description
CPRI	Optic	6	RRH IF (CPRI 4.0)
SW Debug	USB	2	UART DSP Debug
	RJ-45	1	100/1000Base-T
Reset	Reset	1	Board reset
LED	LED	1	SYS

External interface of RRH-P4

Interface Type	Connector Type	Quantity	Description
CPRI	Optic LC/PC	4	DU interface
Antenna	DIN-type female	4	4Tx4Rx
DC Power	Naked Wire	1	-48VDC
GND	-	1	Frame ground

© SAMSUNG Electronics Co., Ltd.

Chapter 4. Smart MBS Software Architecture

4.1 Smart MBS SW Architecture

Software Architecture for each technology is described as follows.

4.1.1 CDMA System Basic SW architecture

CDMA SW Block of Smart MBS consists of Common software, O&M software, and Call software

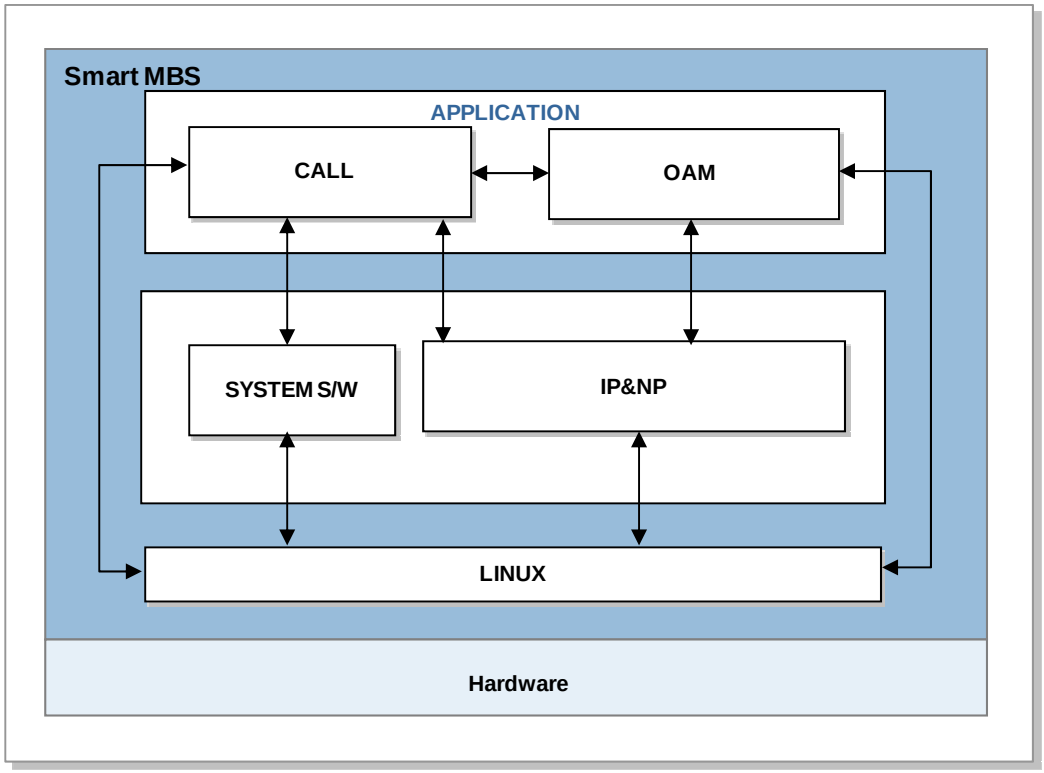

Figure 4.1 Smart MBS CDMA Software Architecture

Common Software

Common Software consists of System Software, and IP Software (which handles IP routing and Traffic)

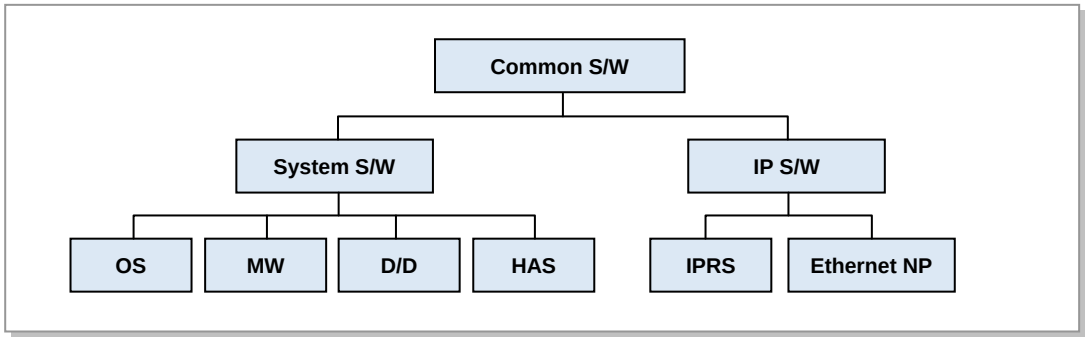

Figure 4.2 CDMA Common Software Architecture

1) System Software

Optimized for each CDMA board of Smart MBS System, following features are provided.

- Linux kernel
- Middleware
- Utility specialized for high capacity BSS
- Redundancy
- Common Device Driver for each board

2) IP Software

IP Software is flexible with Smart MBS and external IP environment, and provides following feature for future expansion.

- IPRS software
- Bearer Traffic Process S/W
- Other IP protocol
- Ethernet NP Software

OAM SW

OAM Software of Smart MBS consists of OP(Operating Processing), and MA(Maintenance Processing).

1) OP (Operating Processing)

OP is classified into Configuration, Loading, Statistics, and UI Blocks.

Configuration Block is responsible for “modification, display of various BSC data”, and “addition, deletion, and management of the system”. Loading Block manages initialization of BSC, and Statistical Block collects statistical data from BSS, and displays it.

Via GUI, UI provides various data required for system operation.

2) MA(Maintenance Processing)

MA provides OAM feature in conjunction with Call Software, OP, and COMMON.

Throughout “status data process”, “error process”, and “diagnostics feature” for various processor and device of BSC, system error can be accurately and quickly maintained that CMP, COMMON Subsystem

© SAMSUNG Electronics Co., Ltd.

feature can be processed normally. Also, throughout OP(Operating Processing), necessary operating data can be provided to operator.

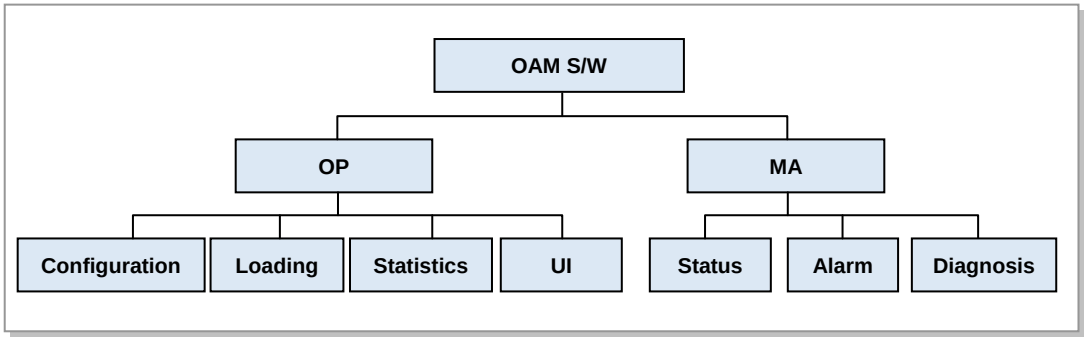

Figure 4.3 CDMA OAM Software Architecture

Call Processing SW

Among the Network Elements of BSS(which composes Access Network), CDMA 1x EVDO Call software(CMP) is composed of Basestation(BTS) and call processing software blocks of BSC(PCF). It is also responsible for connecting Access Terminal and IP Network.

On each NE, there are Signal-processing SW Block and Bearer-processing SW Block.

In case of base station(BTS), there are Signal-processing BCC/BRC, and Bearer-processing CEC. In case of Controller(BSC), there are Signal-processing MCC and Bearer-Processing SDU. Also, in case of Controller(BSC), there is “A1p Protocol-processing SUA block” for MSCe.

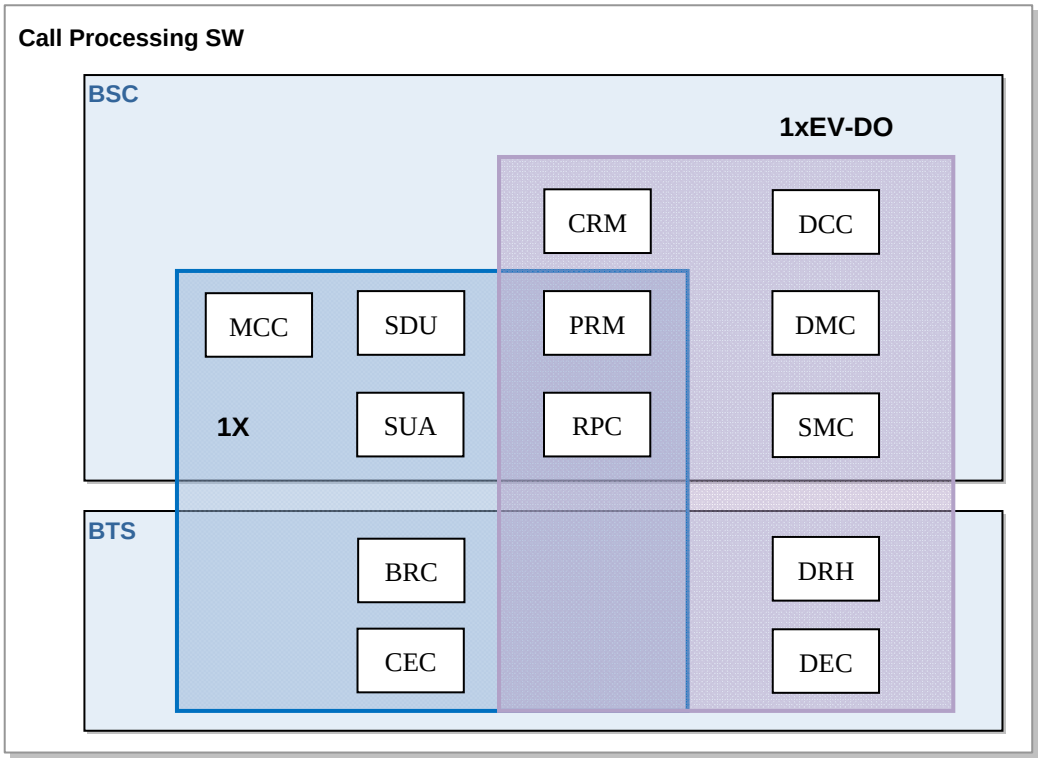

Figure 4.4 CDMA Call Processing Software Structure

4.1.2 LTE System Basic SW Architecture

LTE eNB Software is composed of Kernel Space (OS/DD), Forwarding Space (Network Processing and Control), and User Space (Call Processing, OAM, IPRS, MW). Detailed description for each of components is shown below.

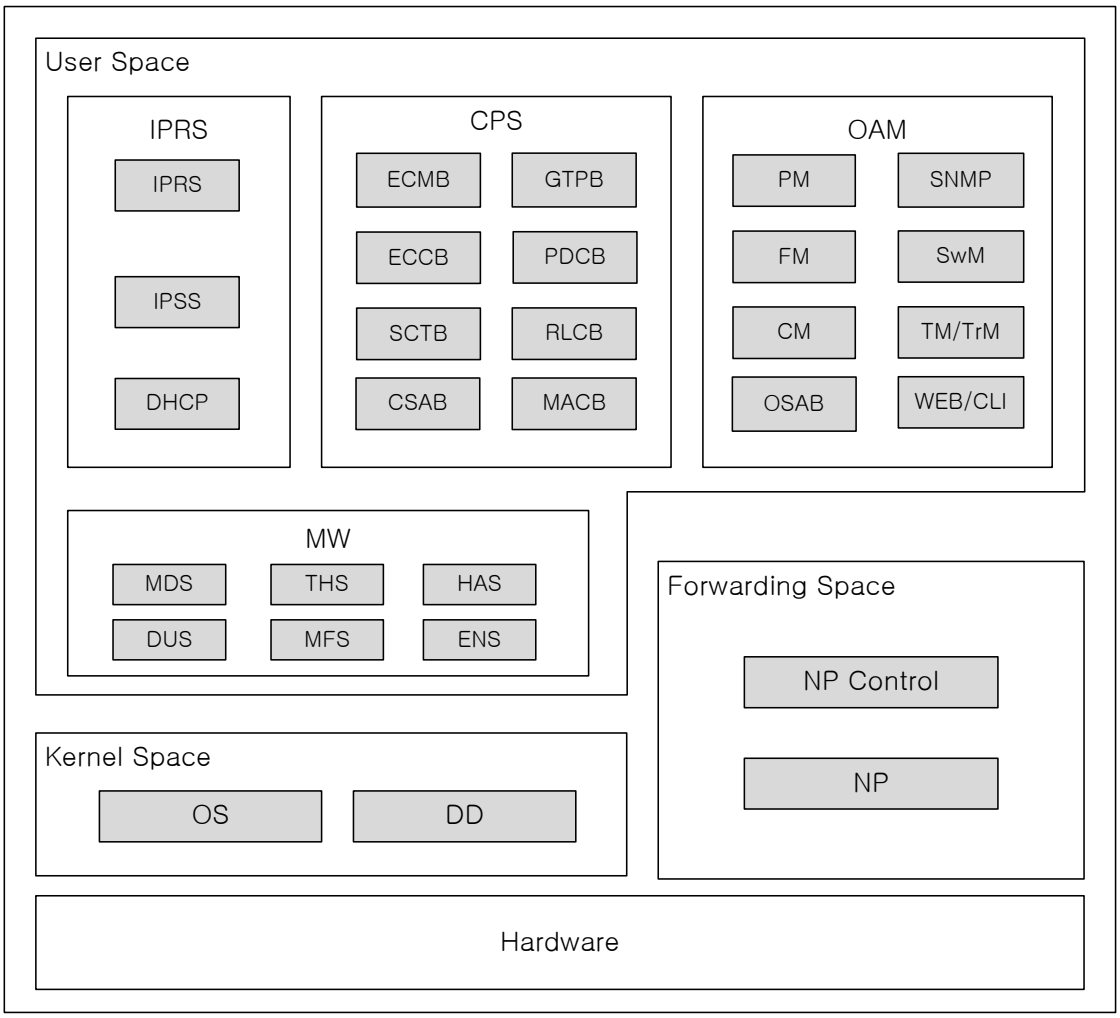

Figure 4.5 Smart MBS LTE Software Architecture

OS(Operating System).

OS can initialize and control hardware devices, and allows softwares to operate on hardware devices. It is composed of Booter, Kernel, RFS (Root File System), and Utility.

- Booter: It is a module that is responsible for initialization of board. It performs initialization of CPU, L1/L2 Cache, UART, MAC. Also, initialization of CPLD, and RAM devices are managed. Finally, u-boot is executed here.
- Kernel: It provides various “primitives” to efficiently utilize the limited resources, and manages the various software processes.
- RFS: Store and manage “Binary, Library, and configuration files”, which are required for Software execution and operation, according to FHS(File-system Hierarchy Standard 2.2)

© SAMSUNG Electronics Co., Ltd.

standard.

- Utility: Provides feature to manage CPLD, LED, Watchdog, Environment and Inventory data management, CPU load measurement/display, and Fault data store in case of Processor Down.

MW(Middleware)

MW allows smooth communication between OS and Application under various hardware environments. For such purpose, it provides “message delivery service, debugging utility service, event and notification service” between applications. Also, it provides “high availability service, task handling service” for redundancy and data backup.

- Message delivery service (MDS): Provides entire service relating to sending and receiving messages.
- Debugging utility service (DUS): Provides function to send debugging data and commands between Application and User.
- Event notification service (ENS): Provides function to register various events(such as timer, etc), manage events, and send event message to target when necessary.
- High availability service (HAS): Provides Data synchronization and redundancy state management.
- Miscellaneous function service (MFS): Manages miscellaneous hardware-dependable functions.(such as accessing hardware’s physical address)
- Task handling service (THS): Provides function to generate/terminate, or display Task.

DD(Device Driver)

Device Driver allows Application to operate normally for particular devices which are not controlled by OS. It is composed of Physical Device Driver and Virtual Device Driver.

- Physical Device Driver: Provides interface where upper application can configure/control/monitor hardware device which are outside of processor. (such as Switch Device Driver, or Ethernet MAC Driver)
- Virtual Device Driver: Abstract the physical network interfaces on Kernel, and allow upper application to control this abstracted interface rather than directly controlling the physical network interface.

NP(Network Processing)

Network Processing is software that processes packet which is required for backhaul interface. It performs the following feature.

- Packet RX and TX
- IPv4 and IPv6
- Packet queuing and scheduling
- MAC filtering
- IP Packet forwarding
- IP fragmentation and reassembly
- Link aggregation

- VLAN termination
- Access control list (ACL)

NPC(Network Processing Control)

Network Processing Control interfaces with upper process (such as IPRS, and OAM) to create/manage various tables which are required for packet process. And it collects Network performance, and performs status management.

IPRS(IP Routing Software)

IPRS(IP Routing Software) is software that provides IP Routing and IP Security function in regards to eNB Backhaul. It is composed of IPRS(IP Routing Software), IPSS(IP Security Software), DHCP (Dynamic Host Configuration Protocol), and each function executes following feature.

- IPRS : Provides Function to collect/manage System Configuration required for IP Routing, a nd generate Routing Data based on this information.
  - Ethernet, VLAN-TE, Link Aggregation management feature
  - Ethernet OAM Feature
  - IP Address Management Feature
  - IP Routing Data Management Feature
  - QoS Management Feature

- IPSS: It is software that performs security for IP layer, and provides following function.
  - IP Address, TCP/UDP port number, Filtering Function based on protocol type.

- DHCP : DHCP is Software Block that executes automatic IP address assignment, and provid es the following function.
  - Interfaces with DHCP Server to automatically obtain IP.

CPS(Call Processing Control)

CPS is software subsystem which executes call processing in LTE eNB. It interfaces with UE, and EPC. CPS is responsible for data transmission in order to provide wireless data service such as MAC scheduling, air link control, ARQ processing, S1, and X2 message processing.

OAM(Operation And Maintenance)

For interface with LSM and Web-EMT, OAM provides standardized interface(SNMPv2c, SNMPv3, SFTP, HTTPs, or SSH) with improved security. Also, for OAM of LTE eNB, it performs call processing, collects performance data, manages system configuration and resource, manages software/hardware resources, manages alarm, and performs diagnosis.

© SAMSUNG Electronics Co., Ltd.

4.2 Loading Flow

Loading is the process where each processors and devices downloads the required software and data from IS. In Smart MBS, Loading is executed during the system initialization. Also, if particular board is newly mounted onto the system, or if hardware reset is executed, or manually reset by upper management system, loading will be executed.

Loading can be classified into two types : loading using Non-volatile storage, or loading using remote IS. At first system initialization, Smart MBS uses remote IS to execute loading. At this time, it stores the corresponding data in its internal storage that unnecessary loading will be prevented in the future. After first initialization, if additional loading is executed, it should compare the version. If the stored data is of the latest version, remote loading will NOT be executed. If stored data is NOT the latest, it will execute remote loading from BSM.

Loading file contains Software image(consists of executable file and script file), PLD(related to configuration data and operation parameter), and other configuration files. Among these, all the necessary data, for the static Routing function of Smart MBS, is stored in its own storage as ENV (CDMA)file, and that the required data will be provided at the initialization.

Loading Procedure

At initialization of Smart MBS, Loader first executes the following tasks in order to execute loading procedure. (Pre-loading)

- Boot-up

  : Booter of Flash ROM copies “kernel and RFS(Root File System)” from Flash ROM to RAM Disk, to execute kernel.

- IP Configuration

  : In order to communicate with upper management system for the first time, IP address data is obtained from flash ROM, and configured. In case of auto initialization, Smart MBS automatically obtains L3 information (such as IP address, subnet mask, and gateway IP) using DHCP.

- Registration

  : Register NE using RS, and obtain IP address of IS during the registration.

- Version Comparison

  : Except for the case of forced loading, “Software image and PLD versions”, stored in remote IS and internal storage, are compared to determine where to execute the loading.

- File List Download

  : Download the list of files needs to be loaded per each board.

Loading Message Flow

After executing Pre-Loading step, loading method is determined. Main OAM(which is responsible for OAM of entire Smart MBS) should execute loading from either the corresponding IS or from its storage using SFTP. After this, Main OAM’s loader now becomes “internal IS” to lower boards, and rest of the loading is executed. The loaded software information of Smart MBS can be checked from upper

management system.

Loading message flow is shown in the following diagram.

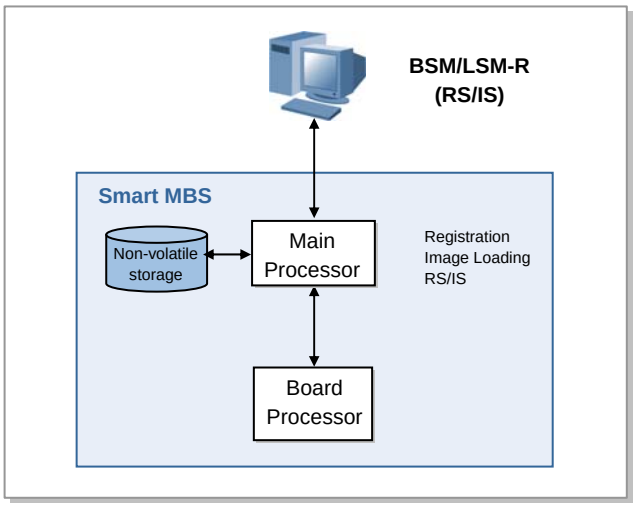

Figure 4.6 Smart MBS' Loading Signal Flow

© SAMSUNG Electronics Co., Ltd.

ABBREVIATION

A

AAA	Authentication, Authorization, Accounting
ADC	Analog to Digital Conversion
AGC	Automatic Gain Control
AISG	Antenna Interface Standards Group
AMC	Adaptive Modulation and Coding
API	Application Programming Interface
ARQ	Automatic Repeat request
ASN	Access Service Network

B

BE	Best Effort
BCMCS	BroadCast MultiCast Service
BCP	Base station Control Processor
BSC	Base Station Controller
BSM	Base Station Manager
BSS	Base Station System
BTS	Base Transceiver Station

C

CAC	Call Admission Control
CICA	CDMA Advanced Channel card board Assembly
CC	Call Control
CC	Convolution Code
CDMA	Code Division Multiple Access
CEP	Channel Element Processor
CID	Connection Identifier
CLEI	Common Language Equipment Identifier
CLI	Command Line Interface
CLIM	Command Line Interface Management
CLLI	Common Language Location Identifier
CM	Configuration Management
CMAS	Commercial Mobile Alert Service
CMIP	Client Mobile IP
CoS	Class of Service
CP	Cyclic Prefix
CPRI	Common Public Radio Interface
CR	Code Rate

CSN	Connectivity Service Network
CTC	Convolution Turbo Code

D

DAM	Diameter AAA Management
DD	Device Driver
DHCP	Dynamic Host Configuration Protocol
DL	Downlink
DMB	Digital Main Block
DPM-FI	DC Power Module -Flexible Indoor
DST	Daylight Saving Time

E

EAIU4-U	External Alarm Interface Unit – type U
EAP	Extensible Authentication Protocol
EMC	Electromagnetic Compatibility
EMI	Electro-Magnetic Interference
EMI	EMS Interface
EMS	Element Management System
eNB	Evolved UTRAN Node-B
ertPS	extended real time Polling Service
EPC	Evolved packet core
EPS	Evolved packet system
E-UTRAN	Evolved UMTS Terrestrial Radio Access Network
EVRC	Enhanced Variable Rate Codec

F

FA	Foreign Agent
FA	Frequency Allocation
FAN-FD48	FAN-Flexible Digital Unit -48VDC
FDD	Frequency Division Duplex
FE	Fast Ethernet
FEC	Forward Error Correction
FFT	Fast Fourier Transform
FRP	Frequency Reuse Pattern
FTP	File Transfer Protocol
FUSC	Full Usage of Sub-Channels

G

GBIC	Gigabit Interface Converter
GE	Gigabit Ethernet
GPS	Global Positioning System
GPSR	GPS Receiver
GRE	Generic Routing Encryption
GTP	GPRS Tunneling Protocol
GTP-U	GTP-User
GUI	Graphical User Interface

© SAMSUNG Electronics Co., Ltd.

GW	Gateway

H

HA	Home Agent
H-ARQ	Hybrid-Automatic Repeat Request
HO	Handover
HRPD	High Rate Packet Data
HSS	Home Subscriber Server
HTTPs	Hypertext Transfer Protocol over SSL

I

ICMP	Internet Control Message Protocol
IEEE	Institute of Electrical and Electronics Engineers
IETF	Internet Engineering Task Force
IMISH	Integrated Management Interface Shell
IOS	Inter Operability System
IP	Internet Protocol
IPRS	IP Routing Software
IPS	Intrusion Prevention System
IPv4	Internet Protocol version 4
IPv6	Internet Protocol version 6
IS	Image Server

L

L9CA	LTE eNB Channel card board Assembly
LTE	Long Term Evolution

M

MAC	Medium Access Control
MIMO	Multiple Input Multiple Output
MIP	Mobile IP
MLPPP	Multi Link Point to Point Protocol
MMBS	Multi Modal Base Station
MMC	Man Machine Command
MME	Mobility Management Entity
MSC-e	Mobile Switching Center-emulator
MTBF	Mean Time Between Failures
MTTR	Mean Time To Repair
MW	Middleware

N

NE	Network Element

NP	Network Processor
NPS	Network Processor Software
NWG	Network Working Group

O

OAGS	Common SNMP Agent Subagent
OAM	Operation and Maintenance
OCM	Common Configuration Management
OER	Common Event Router
OFDMA	Orthogonal Frequency Division Multiple Access
OPM	Common Performance Management
OS	Operating System
OSSM	Common Subscription Service Management

P

PBA	Panel Board Assembly
PCB	Printed Circuit Board
PCRF	Policy & Charging Rules Function
PDU	Protocol Data Unit
PF	Proportional Fair
PGID	Paging Cycle, Paging Offset
PHY	Physical Layer
PLD	Programmable Loading Data
PMIP	Proxy Mobile IP
PP2S	Pulse Per 2 Seconds
PPP	Point to Point Protocol

Q

QAM	Quadrature Amplifier Modulation
QCS	Quick Connection Setup
QoS	Quality of Service

R

RET	Remote Electrical Tilting
RFB	RF Block
RFS	Root File System
RRH	Remote Radio Head
RS	Registration Server
RSSI	Received Signal Strength Indicator

S

SAE	System Architecture Evolution
SBC	Subscriber Station Basic Capacity
SDU	Service Data Unit

© SAMSUNG Electronics Co., Ltd.

SFF	Small Form Factor Fixed
SFP	Small Form Factor Pluggable
SFTP	Secure Shell File Transfer Protocol
SNMP	Simple Network Management Protocol
SNMPD	SNMP Daemon
SSH	Secure Shell
SSL	Secure Sockets Layer

T

TCA	Threshold Cross Alert
TDD	Time Division Duplex

U

UCCM	Universal Core Clock Module
UDA	User Defined Alarm
UDE	User Define Ethernet
UDP	User Datagram Protocol
UFM	Common Fault Management
UL	Uplink
ULM	Universal Loading Management

V

VIF	Virtual Interface
VLAN	Virtual Local Area Network

W

Web-EMT	Web-based Element Maintenance Terminal
WLAN	Wireless Local Area Network

This page is intentionally left blank.

© SAMSUNG Electronics Co., Ltd.

⚠	Warning: Exposure to Radio Frequency Radiation The radiated output power of this device is far below the FCC radio frequency exposure limits. Nevertheless, the device should be used in such a manner that the potential for human contact during normal operation is minimized. In order to avoid the possibility of exceeding the FCC radio frequency exposure limits, human proximity to the antenna should not be less than 500 cm during normal operation. The gain of the antenna is 17.0 dBi. The antenna(s) used for this transmitter must not be co-located or operating in conjunction with any other antenna or transmitter.

ⓒ SAMSUNG Electronics Co., Ltd.

Smart MBS
System Description

©2011 Samsung Electronics Co., Ltd.

All rights reserved.

All text and images in this document are subject to the copyright of SAMSUNG Electronics Co., Ltd.
This document may not be reproduced, distributed, or modified without the written permission of SAMSUNG Electronics Co., Ltd.

SAMSUNG
삼성전자