PCTEST ENGINEERING LABORATORY, INC.
7185 Oakland Mills Road, Columbia, MD 21046 USA
Tel. +1.410.290.6652 / Fax +1.410.290.6654
http://www.pctestlab.com

SAR EVALUATION REPORT

Applicant Name:
Samsung Electronics, Co. Ltd.
129, Samsung-ro, Maetan dong,
Yeongtong-gu, Suwon-si
Gyeonggi-do 443-742, Korea

Date of Testing:
08/07/14 - 09/09/14
Test Site/Location:
PCTEST Lab, Columbia, MD, USA
Document Serial No.:
0Y1408051616.A3L

FCC ID: **A3LSMN910R4**

APPLICANT: **SAMSUNG ELECTRONICS, CO. LTD.**

DUT Type: Portable Handset
Application Type: Certification
FCC Rule Part(s): CFR §2.1093
Model(s): SM-N910R4

Equipment Class	Band & Mode	Tx Frequency	SAR			
			1 gm Head (W/kg)	1 gm Body-Worn (W/kg)	1 gm Hotspot (W/kg)	10 gm Extremity (W/kg)
PCE	Cell. CDMA/EVDO	824.70 - 848.31 MHz	0.23	0.51	0.66	
PCE	PCS CDMA/EVDO	1851.25 - 1908.75 MHz	0.35	1.00	0.49	
PCE	LTE Band 12	699.7 - 715.3 MHz	0.13	0.15	0.29	
PCE	LTE Band 5 (Cell)	824.7 - 848.3 MHz	0.14	0.14	0.35	
PCE	LTE Band 4 (AWS)	1710.7 - 1754.3 MHz	0.11	0.14	0.47	
PCE	LTE Band 2 (PCS)	1850.7 - 1909.3 MHz	0.20	0.17	1.07	
DTS	2.4 GHz WLAN	2412 - 2462 MHz	0.67	0.14	0.14	
DTS	5.8 GHz WLAN	5745 - 5825 MHz	< 0.1	0.22	0.46	
NII	5.2 GHz WLAN	5180 - 5240 MHz	0.16	0.11		0.35
NII	5.3 GHz WLAN	5260 - 5320 MHz	0.14	0.12		0.37
NII	5.5 GHz WLAN	5500 - 5700 MHz	0.10	0.37		0.68
DSS/DTS	Bluetooth	2402 - 2480 MHz	N/A			
Simultaneous SAR per KDB 690783 D01v01r03:			0.95	1.53	1.50	0.68

This wireless portable device has been shown to be capable of compliance for localized specific absorption rate (SAR) for uncontrolled environment/general population exposure limits specified in ANSI/IEEE C95.1-1992 and has been tested in accordance with the measurement procedures specified in Section 1.9 of this report; for North American frequency bands only.

I attest to the accuracy of data. All measurements reported herein were performed by me or were made under my supervision and are correct to the best of my knowledge and belief. I assume full responsibility for the completeness of these measurements and vouch for the qualifications of all persons taking them. Test results reported herein relate only to the item(s) tested.

Randy Ortanez
President

The SAR Tick is an initiative of the Mobile Manufacturers Forum (MMF). While a product may be considered eligible, use of the SAR Tick logo requires an agreement with the MMF. Further details can be obtained by emailing: sartick@mmfai.info.

© 2014 PCTEST Engineering Laboratory, Inc.

TABLE OF CONTENTS

1 DEVICE UNDER TEST 3

2 LTE INFORMATION 10

3 INTRODUCTION 11

4 DOSIMETRIC ASSESSMENT 12

5 DEFINITION OF REFERENCE POINTS 13

6 TEST CONFIGURATION POSITIONS FOR HANDSETS 14

7 RF EXPOSURE LIMITS 17

8 FCC MEASUREMENT PROCEDURES 18

9 RF CONDUCTED POWERS 23

10 SYSTEM VERIFICATION 43

11 SAR DATA SUMMARY 47

12 FCC MULTI-TX AND ANTENNA SAR CONSIDERATIONS 58

13 SAR MEASUREMENT VARIABILITY 79

14 EQUIPMENT LIST 80

15 MEASUREMENT UNCERTAINTIES 82

16 CONCLUSION 84

17 REFERENCES 85

APPENDIX A: SAR TEST PLOTS

APPENDIX B: SAR DIPOLE VERIFICATION PLOTS

APPENDIX C: PROBE AND DIPOLE CALIBRATION CERTIFICATES

APPENDIX D: SAR TISSUE SPECIFICATIONS

APPENDIX E: SAR SYSTEM VALIDATION

APPENDIX F: SAR TEST SETUP PHOTOGRAPHS

© 2014 PCTEST Engineering Laboratory, Inc.

1 DEVICE UNDER TEST

1.1 Device Overview

Band & Mode	Operating Modes	Tx Frequency
Cell. CDMA/EVDO	Voice/Data	824.70 - 848.31 MHz
PCS CDMA/EVDO	Voice/Data	1851.25 - 1908.75 MHz
LTE Band 12	Data	699.7 - 715.3 MHz
LTE Band 17	Data	706.5 - 713.5 MHz
LTE Band 5 (Cell)	Data	824.7 - 848.3 MHz
LTE Band 4 (AWS)	Data	1710.7 - 1754.3 MHz
LTE Band 2 (PCS)	Data	1850.7 - 1909.3 MHz
2.4 GHz WLAN	Data	2412 - 2462 MHz
5.8 GHz WLAN	Data	5745 - 5825 MHz
5.2 GHz WLAN	Data	5180 - 5240 MHz
5.3 GHz WLAN	Data	5260 - 5320 MHz
5.5 GHz WLAN	Data	5500 - 5700 MHz
Bluetooth	Data	2402 - 2480 MHz
NFC	Data	13.56 MHz
ANT+	Data	2402 - 2480 MHz

1.2 Power Reduction for SAR

The device utilizes power reduction using an independent single fixed level of reduction through a static table look-up, triggered by turning on Hotspot operating in Cell. CDMA/EVDO, PCS CDMA/EVDO. There is no Hotspot power reduction for all LTE and WLAN modes for SAR compliance. The reduced powers were confirmed via conducted power measurements at the RF port (see Section 9). Detailed description of the hotspot power reduction mechanism is included in the FCC filing.

The device additionally utilizes power reduction for LTE when simultaneously transmitting with 1x-RTT CDMA Voice in certain SVLTE conditions. However, since this mechanism was not implemented for SAR compliance, all LTE SAR evaluations were performed with the device operating at maximum output power. Detailed description of this power reduction mechanism is included in the FCC filing. Please note that the actual simultaneous transmission SAR will not exceed the summed levels.

1.3 Nominal and Maximum Output Power Specifications

This device operates using the following maximum and nominal output power specifications. SAR values were scaled to the maximum allowed power to determine compliance per KDB Publication 447498 D01v05.

1.3.1 Maximum Power

Mode / Band		Modulated Average (dBm)
Cell. CDMA/EVDO	Maximum	**25.0**
	Nominal	**24.5**
PCS CDMA/EVDO	Maximum	**25.0**
	Nominal	**24.5**

© 2014 PCTEST Engineering Laboratory, Inc.

Mode / Band		Modulated Average (dBm)
LTE Band 12	Maximum	**24.0**
	Nominal	**23.5**
LTE Band 17	Maximum	**24.0**
	Nominal	**23.5**
LTE Band 5 (Cell)	Maximum	**24.5**
	Nominal	**24.0**
LTE Band 4 (AWS)	Maximum	**24.0**
	Nominal	**23.5**
LTE Band 2 (PCS)	Maximum	**23.5**
	Nominal	**23.0**
Mode / Band		Modulated Average (dBm)
SISO IEEE 802.11b (2.4 GHz)	Maximum	**15.5**
	Nominal	**15.0**
SISO IEEE 802.11g (2.4 GHz)	Maximum	**14.5**
	Nominal	**14.0**
SISO IEEE 802.11n (2.4 GHz)	Maximum	**13.5**
	Nominal	**13.0**
MIMO IEEE 802.11n (2.4 GHz)	Maximum	**15.5**
	Nominal	**15.0**
SISO IEEE 802.11a (5 GHz)	Maximum	**12.5**
	Nominal	**12.0**
SISO IEEE 802.11n (5 GHz - 20 MHz Bandwidth)	Maximum	**12.5**
	Nominal	**12.0**
MIMO IEEE 802.11n (5 GHz - 20 MHz Bandwidth)	Maximum	**15.5**
	Nominal	**15.0**
SISO IEEE 802.11n (5 GHz - 40 MHz Bandwidth)	Maximum	**9.5**
	Nominal	**9.0**
MIMO IEEE 802.11n (5 GHz - 40 MHz Bandwidth)	Maximum	**12.5**
	Nominal	**12.0**
SISO IEEE 802.11ac (5 GHz - 80 MHz Bandwidth)	Maximum	**10.5**
	Nominal	**10.0**
MIMO IEEE 802.11ac (5 GHz - 80 MHz Bandwidth)	Maximum	**13.5**
	Nominal	**13.0**
Bluetooth	Maximum	**12.0**
	Nominal	**11.5**
Bluetooth LE	Maximum	**8.0**
	Nominal	**7.5**

1.3.2 Reduced Power

Mode / Band		Modulated Average (dBm)
Cell. CDMA/EVDO	Maximum	**23.0**
	Nominal	**22.5**
PCS CDMA/EVDO	Maximum	**23.0**
	Nominal	**22.5**

© 2014 PCTEST Engineering Laboratory, Inc.

1.4 DUT Antenna Locations

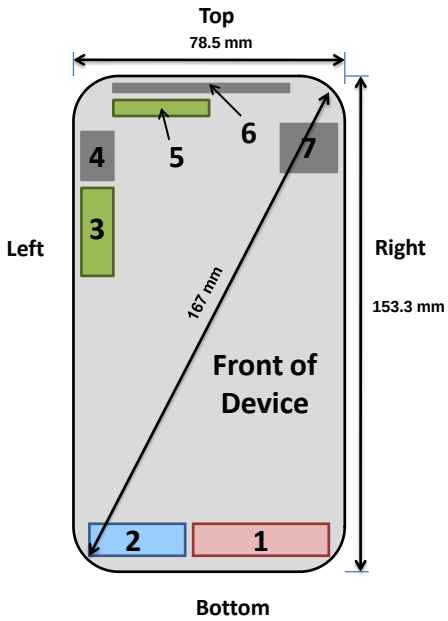

1. **LTE Main Antenna (Tx/Rx)**
   - B12/17/5/4/2
2. **CDMA/EVDO Main Antenna (Tx/Rx)**
   - BC0/1
3. **BT/WLAN Antenna #1 (Tx/Rx)**
   - 2.4 GHz BT/WIFI
   - 5 GHz WIFI
4. **GPS Antenna (Rx only)**
5. **WLAN Antenna #2 (Tx/Rx)**
   - 2.4 GHz WIFI
   - 5 GHz WIFI
6. **Sub Antenna (Rx only)**
   - LTE B12/17/5/4/2
7. **Sub Antenna (Rx only)**
   - CDMA/EVDO BC0/1

Note: Exact antenna dimensions and separation distances are shown in the Technical Descriptions in the FCC Filing. Since the diagonal dimension of this device is > 160 mm and < 200 mm, it is considered a "phablet."

Figure 1-1
DUT Antenna Locations

Table 1-1
Sides for SAR Testing for Mobile Hotspot and Extremity Exposure Conditions

Mode	Back	Front	Top	Bottom	Right	Left
Cell. EVDO	Yes	Yes	No	Yes	Yes	Yes
PCS EVDO	Yes	Yes	No	Yes	Yes	Yes
LTE Band 12	Yes	Yes	No	Yes	Yes	Yes
LTE Band 5 (Cell)	Yes	Yes	No	Yes	Yes	Yes
LTE Band 4 (AWS)	Yes	Yes	No	Yes	Yes	Yes
LTE Band 2 (PCS)	Yes	Yes	No	Yes	Yes	Yes
2.4 GHz WLAN Ant. 1 & MIMO	Yes	Yes	Yes	No	No	Yes
2.4 GHz WLAN Ant. 2	Yes	Yes	Yes	No	No	No
5 GHz WLAN Ant. 1 & MIMO	Yes	Yes	Yes	No	No	Yes
5 GHz WLAN Ant. 2	Yes	Yes	Yes	No	No	No

Note: Particular DUT edges were not required to be evaluated for Wireless Router SAR or Extremity SAR if the edges were greater than 2.5 cm from the transmitting antenna according to FCC KDB Publication 941225 D06v01 guidance, page 2 and FCC KDB 648474 D04v01r01. The distances between the transmit antennas and the edges of the device are included in the filing. When wireless router mode is enabled, 5.2-5.7 GHz WLAN operations are disabled. Therefore, 5.8 GHz WLAN refers mobile hotspot testing sides and 5.2-5.7 GHz WLAN refers to extremity testing sides.

© 2014 PCTEST Engineering Laboratory, Inc.

1.5 Near Field Communications (NFC) Antenna

This DUT has NFC operations. The NFC antenna is integrated into the specialized battery. The SAR tests were performed with the specialized battery (model: EB-BN910BBU).

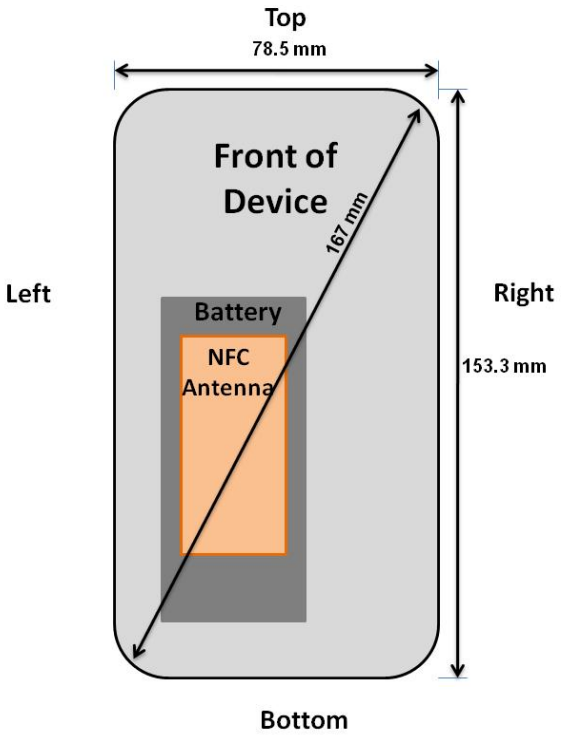

Figure 1-2
NFC Antenna Locations

1.6 Simultaneous Transmission Capabilities

According to FCC KDB Publication 447498 D05v01, transmitters are considered to be transmitting simultaneously when there is overlapping transmission, with the exception of transmissions during network hand-offs with maximum hand-off duration less than 30 seconds. Possible transmission paths for the DUT are shown in Figure 1-3 and are color-coded to indicate communication modes which share the same path. Modes which share the same transmission path cannot transmit simultaneously with one another.

Figure 1-3
Simultaneous Transmission Paths

This device contains multiple transmitters that may operate simultaneously, and therefore requires a simultaneous transmission analysis according to FCC KDB Publication 447498 D01v05 3) procedures.

© 2014 PCTEST Engineering Laboratory, Inc.

Table 1-2
Simultaneous Transmission Scenarios

No.	Capable Transmit Configuration	Head	Body-Worn Accessory	Wireless Router	Extremity	Notes
1	1x CDMA voice + 2.4 GHz WI-FI	Yes	Yes	N/A	Yes	
2	1x CDMA voice + 5 GHz WI-FI	Yes	Yes	N/A	Yes	
3	1x CDMA voice + 2.4 GHz Bluetooth	N/A	Yes	N/A	Yes	
4	LTE + 2.4 GHz WI-FI	Yes*	Yes*	Yes	Yes	*-Pre-installed VOIP applications are considered.
5	LTE + 5 GHz WI-FI	Yes*	Yes*	Yes	Yes	*-Pre-installed VOIP applications are considered.
6	LTE + 2.4 GHz Bluetooth	N/A	Yes*	N/A	Yes	*-Pre-installed VOIP applications are considered.
7	CDMA/EVDO data + 2.4 GHz WI-FI	Yes*	Yes*	Yes	Yes	*-Pre-installed VOIP applications are considered.
8	CDMA/EVDO data + 5 GHz WI-FI	Yes*	Yes*	Yes	Yes	*-Pre-installed VOIP applications are considered.
9	CDMA/EVDO data + 2.4 GHz Bluetooth	N/A	Yes*	N/A	Yes	*-Pre-installed VOIP applications are considered.
10	1x CDMA voice + LTE	Yes	Yes	N/A	Yes	
11	1x CDMA voice + LTE + 2.4 GHz WI-FI	Yes	Yes	Yes	Yes	
12	1x CDMA voice + LTE + 5 GHz WI-FI	Yes	Yes	Yes	Yes	
13	1x CDMA voice + LTE + 2.4 GHz Bluetooth	N/A	Yes	N/A	Yes	
14	1x CDMA voice + CDMA/EVDO data	N/A	N/A	N/A	N/A	Not supported by HW
15	CDMA/EVDO data + LTE	N/A	N/A	N/A	N/A	Not supported by SW

1. Per the manufacturer, WIFI Direct is not expected to be used in conjunction with a held-to-ear or body-worn accessory voice call. Therefore, there are no simultaneous transmission scenarios involving WIFI direct beyond that listed in the above table.
2. 5 GHz Wireless Router is only supported for the 5.8 GHz Band by S/W, therefore 5.2-5.7 GHz Bands were not evaluated for wireless router conditions.
3. This device supports 2 × 2 MIMO Tx for WLAN 802.11n/ac. Each WLAN antenna can transmit independently or together when operating with MIMO.

1.7 SAR Test Exclusions Applied

(A) WIFI/BT

Since Wireless Router operations are not allowed by the chipset firmware using 5.2-5.7 GHz WIFI, only 2.4 GHz and 5.8 GHz WIFI Hotspot SAR tests and combinations are considered for SAR with respect to Wireless Router configurations according to FCC KDB 941225 D06v01.

Per FCC KDB 447498 D01v05, the 1g SAR exclusion threshold for distances <50mm is defined by the following equation:

$$\frac{Max\ Power\ of\ Channel\ (mW)}{Test\ Separation\ Dist\ (mm)} * \sqrt{Frequency(GHz)} \leq 3.0$$

Based on the maximum conducted power of Bluetooth (rounded to the nearest mW) and the antenna to user separation distance, body-worn Bluetooth SAR was not required; [(16/15)* √2.480] = 1.7 < 3.0. Per KDB Publication 447498 D01v05, the maximum power of the channel was rounded to the nearest mW before calculation.

Per FCC KDB 447498 D01v05, the 10g SAR exclusion threshold for distances <50mm is defined by the following equation:

$$\frac{Max\ Power\ of\ Channel\ (mW)}{Test\ Separation\ Dist\ (mm)} * \sqrt{Frequency(GHz)} \leq 7.5$$

Based on the maximum conducted power of Bluetooth (rounded to the nearest mW) and the antenna to user separation distance, extremity Bluetooth SAR was not required; [(16/5)* √2.480] = 5.0 < 7.5. Per KDB Publication 447498 D01v05, the maximum power of the channel was rounded to the nearest mW before calculation.

This device supports 20 MHz and 40 MHz Bandwidths for IEEE 802.11n for 5 GHz WIFI only. IEEE 802.11n was not evaluated for SAR since the average output power of 20 MHz and 40 MHz bandwidths was not more than 0.25 dB higher than the average output power of IEEE 802.11a.

© 2014 PCTEST Engineering Laboratory, Inc.

This device supports IEEE 802.11ac with the following features:

a) Up to 80 MHz Bandwidth only
b) No aggregate channel configurations
c) 2 Tx antenna output
d) 256 QAM is supported
e) No new 5 GHz channels

Per FCC KDB Publication 648474 D04v01r01, this device is considered a "phablet" since the diagonal dimension is greater than 160 mm and less than 200 mm. Extremity SAR tests are required when wireless router mode does not apply or if wireless router 1g SAR > 1.2 W/kg. Because wireless router operations are not supported for 5.2 – 5.7 GHz WLAN, extremity SAR tests were performed. Extremity SAR was not evaluated for 2.4 GHz and 5.8 GHz WLAN operations since wireless router 1g SAR was < 1.2 W/kg.

(B) Licensed Transmitter(s)

LTE SAR for the higher modulations and lower bandwidths were not tested since the maximum average output power of all required channels and configurations was not more than 0.5 dB higher than the highest bandwidth; and the reported LTE SAR for the highest bandwidth was less than 1.45 W/kg for all configurations according to FCC KDB 941225 D05v02.

This device additionally supports LTE Band 17. LTE Band 12 and LTE Band 17 share the same transmission path. LTE Band 17 was not evaluated for SAR since the supported frequency range falls within the LTE Band 12 supported frequency range.

CDMA 1x Advanced technology was not required for SAR since the maximum output powers for 1x Advanced was not more than 0.25 dB higher than the maximum measured powers for 1x and the measured SAR in any 1x mode exposure conditions was not greater than 1.2 W/kg.

Per FCC KDB Publication 648474 D04v01r01, this device is considered a "phablet" since the diagonal dimension is greater than 160 mm and less than 200 mm. Therefore, extremity SAR tests are required when wireless router mode does not apply or if wireless router 1g SAR > 1.2 W/kg. Extremity SAR was not evaluated for licensed technologies since wireless router 1g SAR was < 1.2 W/kg for these modes when scaled up to maximum output power tolerances.

1.8 Wireless Charging Battery Cover

This DUT may be used with a standard battery cover or with an optional wireless charging battery cover. Per FCC KDB Publication 648474 D03, SAR was measured using the standard battery cover and then repeated with the wireless charging battery cover for the configuration with the highest measured SAR for each wireless technology, frequency band, operating mode, and exposure condition. Since reported SAR did not exceed 1.2 W/kg, additional testing with the wireless charging battery cover was not required.

© 2014 PCTEST Engineering Laboratory, Inc.

1.9 Guidance Applied

- IEEE 1528-2003
- FCC KDB Publication 941225 D01v02, D02v02r02, D03v01, D05v02r03, D06v01r01 (2G/3G/4G and Hotspot)
- FCC KDB Publication 248227 D01v01r02 (SAR Considerations for 802.11 Devices)
- FCC KDB Publication 447498 D01v05r02 (General SAR Guidance)
- FCC KDB Publication 865664 D01v01r03, D02v01r01 (SAR Measurements up to 6 GHz)
- FCC KDB Publication 648474 D03-D04 (Phablet Procedures, Wireless Charging Cover)
- April 2013 TCB Workshop Notes (IEEE 802.11ac)

1.10 Device Serial Numbers

Several samples with identical hardware were used to support SAR testing. The manufacturer has confirmed that the device(s) tested have the same physical, mechanical and thermal characteristics and are within operational tolerances expected for production units.

	Maximum Power Serial Number	Reduced Power Serial Number
Cell. CDMA/EVDO	33ED6	33ED2
PCS CDMA/EVDO	33ED8	33ED2
LTE Band 12	33EDD	-
LTE Band 5 (Cell)	33EE3	-
LTE Band 4 (AWS)	33ECE	-
LTE Band 2 (PCS)	33EDE	-
2.4 GHz WLAN	015D8, 01FC3	-
5 GHz WLAN head/body/hotspot	015D8	-
5 GHz WLAN extremity	015D7	-

© 2014 PCTEST Engineering Laboratory, Inc.

2 LTE INFORMATION

LTE Information			
FCC ID	**A3LSMN910R4**		
Form Factor	Portable Handset		
Frequency Range of each LTE transmission band	LTE Band 12 (699.7 - 715.3 MHz)		
	LTE Band 17 (706.5 - 713.5 MHz)		
	LTE Band 5 (Cell) (824.7 - 848.3 MHz)		
	LTE Band 4 (AWS) (1710.7 - 1754.3 MHz)		
	LTE Band 2 (PCS) (1850.7 - 1909.3 MHz)		
Channel Bandwidths	LTE Band 12: 1.4 MHz, 3 MHz, 5 MHz, 10 MHz		
	LTE Band 17: 5 MHz, 10 MHz		
	LTE Band 5 (Cell): 1.4 MHz, 3 MHz, 5 MHz, 10 MHz		
	LTE Band 4 (AWS): 1.4 MHz, 3 MHz, 5 MHz, 10 MHz, 15 MHz, 20 MHz		
	LTE Band 2 (PCS): 1.4 MHz, 3 MHz, 5 MHz, 10 MHz, 15 MHz, 20 MHz		
Channel Numbers and Frequencies (MHz)	Low	Mid	High
LTE Band 12: 1.4 MHz	699.7 (23017)	707.5 (23095)	715.3 (23173)
LTE Band 12: 3 MHz	700.5 (23025)	707.5 (23095)	714.5 (23165)
LTE Band 12: 5 MHz	701.5 (23035)	707.5 (23095)	713.5 (23155)
LTE Band 12: 10 MHz	704 (23060)	707.5 (23095)	711 (23130)
LTE Band 17: 5 MHz	706.5 (23755)	710 (23790)	713.5 (23825)
LTE Band 17: 10 MHz	709 (23780)	710 (23790)	711 (23800)
LTE Band 5 (Cell): 1.4 MHz	824.7 (20407)	836.5 (20525)	848.3 (20643)
LTE Band 5 (Cell): 3 MHz	825.5 (20415)	836.5 (20525)	847.5 (20635)
LTE Band 5 (Cell): 5 MHz	826.5 (20425)	836.5 (20525)	846.5 (20625)
LTE Band 5 (Cell): 10 MHz	829 (20450)	836.5 (20525)	844 (20600)
LTE Band 4 (AWS): 1.4 MHz	1710.7 (19957)	1732.5 (20175)	1754.3 (20393)
LTE Band 4 (AWS): 3 MHz	1711.5 (19965)	1732.5 (20175)	1753.5 (20385)
LTE Band 4 (AWS): 5 MHz	1712.5 (19975)	1732.5 (20175)	1752.5 (20375)
LTE Band 4 (AWS): 10 MHz	1715 (20000)	1732.5 (20175)	1750 (20350)
LTE Band 4 (AWS): 15 MHz	1717.5 (20025)	1732.5 (20175)	1747.5 (20325)
LTE Band 4 (AWS): 20 MHz	1720 (20050)	1732.5 (20175)	1745 (20300)
LTE Band 2 (PCS): 1.4 MHz	1850.7 (18607)	1880 (18900)	1909.3 (19193)
LTE Band 2 (PCS): 3 MHz	1851.5 (18615)	1880 (18900)	1908.5 (19185)
LTE Band 2 (PCS): 5 MHz	1852.5 (18625)	1880 (18900)	1907.5 (19175)
LTE Band 2 (PCS): 10 MHz	1855 (18650)	1880 (18900)	1905 (19150)
LTE Band 2 (PCS): 15 MHz	1857.5 (18675)	1880 (18900)	1902.5 (19125)
LTE Band 2 (PCS): 20 MHz	1860 (18700)	1880 (18900)	1900 (19100)
UE Category	4		
Modulations Supported in UL	QPSK, 16QAM		
LTE MPR Permanently implemented per 3GPP TS 36.101 section 6.2.3~6.2.5? (manufacturer attestation to be provided)	YES		
A-MPR (Additional MPR) disabled for SAR Testing?	YES		

© 2014 PCTEST Engineering Laboratory, Inc.

3 INTRODUCTION

The FCC and Industry Canada have adopted the guidelines for evaluating the environmental effects of radio frequency (RF) radiation in ET Docket 93-62 on Aug. 6, 1996 and Health Canada Safety Code 6 to protect the public and workers from the potential hazards of RF emissions due to FCC-regulated portable devices. [1]

The safety limits used for the environmental evaluation measurements are based on the criteria published by the American National Standards Institute (ANSI) for localized specific absorption rate (SAR) in IEEE/ANSI C95.1-1992 Standard for Safety Levels with Respect to Human Exposure to Radio Frequency Electromagnetic Fields, 3 kHz to 300 GHz [3] and Health Canada RF Exposure Guidelines Safety Code 6 [22]. The measurement procedure described in IEEE/ANSI C95.3-2002 Recommended Practice for the Measurement of Potentially Hazardous Electromagnetic Fields - RF and Microwave [4] is used for guidance in measuring the Specific Absorption Rate (SAR) due to the RF radiation exposure from the Equipment Under Test (EUT). These criteria for SAR evaluation are similar to those recommended by the International Committee for Non-Ionizing Radiation Protection (ICNIRP) in Biological Effects and Exposure Criteria for Radiofrequency Electromagnetic Fields," Report No. Vol 74. SAR is a measure of the rate of energy absorption due to exposure to an RF transmitting source. SAR values have been related to threshold levels for potential biological hazards.

3.1 SAR Definition

Specific Absorption Rate is defined as the time derivative (rate) of the incremental energy (dU) absorbed by (dissipated in) an incremental mass (dm) contained in a volume element (dV) of a given density (ρ). It is also defined as the rate of RF energy absorption per unit mass at a point in an absorbing body (see Equation 3-1).

Equation 3-1
SAR Mathematical Equation

$$SAR = \frac{d}{dt}\left(\frac{dU}{dm}\right) = \frac{d}{dt}\left(\frac{dU}{\rho dv}\right)$$

SAR is expressed in units of Watts per Kilogram (W/kg).

$$SAR = \frac{\sigma \cdot E^2}{\rho}$$

where:

σ = conductivity of the tissue-simulating material (S/m)
ρ = mass density of the tissue-simulating material (kg/m^3)
E = Total RMS electric field strength (V/m)

NOTE: The primary factors that control rate of energy absorption were found to be the wavelength of the incident field in relation to the dimensions and geometry of the irradiated organism, the orientation of the organism in relation to the polarity of field vectors, the presence of reflecting surfaces, and whether conductive contact is made by the organism with a ground plane.[6]

© 2014 PCTEST Engineering Laboratory, Inc.

4 DOSIMETRIC ASSESSMENT

4.1 Measurement Procedure

The evaluation was performed using the following procedure compliant to FCC KDB Publication 865664 D01v01 and IEEE 1528-2013:

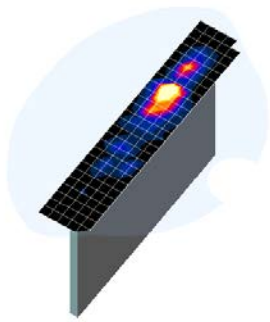

Figure 4-1
Sample SAR Area Scan

1. The SAR distribution at the exposed side of the head or body was measured at a distance no greater than 5.0 mm from the inner surface of the shell. The area covered the entire dimension of the device-head and body interface and the horizontal grid resolution was determined per FCC KDB Publication 865664 D01v01 (See Table 4-1) and IEEE 1528-2013.
2. The point SAR measurement was taken at the maximum SAR region determined from Step 1 to enable the monitoring of SAR fluctuations/drifts during the 1g/10g cube evaluation. SAR at this fixed point was measured and used as a reference value.
3. Based on the area scan data, the peak of the region with maximum SAR was determined by spline interpolation. Around this point, a volume was assessed according to the measurement resolution and volume size requirements of FCC KDB Publication 865664 D01v01 (See Table 4-1) and IEEE 1528-2013. On the basis of this data set, the spatial peak SAR value was evaluated with the following procedure (see references or the DASY manual online for more details):
   a. SAR values at the inner surface of the phantom are extrapolated from the measured values along the line away from the surface with spacing no greater than that in Table 4-1. The extrapolation was based on a least-squares algorithm. A polynomial of the fourth order was calculated through the points in the z-axis (normal to the phantom shell).
   b. After the maximum interpolated values were calculated between the points in the cube, the SAR was averaged over the spatial volume (1g or 10g) using a 3D-Spline interpolation algorithm. The 3D-spline is composed of three one-dimensional splines with the "Not a knot" condition (in x, y, and z directions). The volume was then integrated with the trapezoidal algorithm. One thousand points (10 x 10 x 10) were obtained through interpolation, in order to calculate the averaged SAR.
   c. All neighboring volumes were evaluated until no neighboring volume with a higher average value was found.
4. The SAR reference value, at the same location as step 2, was re-measured after the zoom scan was complete to calculate the SAR drift. If the drift deviated by more than 5%, the SAR test and drift measurements were repeated.

Table 4-1
Area and Zoom Scan Resolutions per FCC KDB Publication 865664 D01v01*

Frequency	Maximum Area Scan Resolution (mm) (Δx_{area}, Δy_{area})	Maximum Zoom Scan Resolution (mm) (Δx_{zoom}, Δy_{zoom})	Maximum Zoom Scan Spatial Resolution (mm)			Minimum Zoom Scan Volume (mm) (x,y,z)
			Uniform Grid	Graded Grid		
			$\Delta z_{zoom}(n)$	$\Delta z_{zoom}(1)$*	$\Delta z_{zoom}(n>1)$*	
≤ 2 GHz	≤ 15	≤ 8	≤ 5	≤ 4	≤ 1.5*$\Delta z_{zoom}(n-1)$	≥ 30
2-3 GHz	≤ 12	≤ 5	≤ 5	≤ 4	≤ 1.5*$\Delta z_{zoom}(n-1)$	≥ 30
3-4 GHz	≤ 12	≤ 5	≤ 4	≤ 3	≤ 1.5*$\Delta z_{zoom}(n-1)$	≥ 28
4-5 GHz	≤ 10	≤ 4	≤ 3	≤ 2.5	≤ 1.5*$\Delta z_{zoom}(n-1)$	≥ 25
5-6 GHz	≤ 10	≤ 4	≤ 2	≤ 2	≤ 1.5*$\Delta z_{zoom}(n-1)$	≥ 22

*Also compliant to IEEE 1528-2013 Table 6

© 2014 PCTEST Engineering Laboratory, Inc.

5 DEFINITION OF REFERENCE POINTS

5.1 EAR REFERENCE POINT

Figure 5-2 shows the front, back and side views of the SAM Twin Phantom. The point "M" is the reference point for the center of the mouth, "LE" is the left ear reference point (ERP), and "RE" is the right ERP. The ERP is 15mm posterior to the entrance to the ear canal (EEC) along the B-M line (Back-Mouth), as shown in Figure 5-1. The plane passing through the two ear canals and M is defined as the Reference Plane. The line N-F (Neck-Front), also called the Reference Pivoting Line, is not perpendicular to the reference plane (see Figure 5-1). Line B-M is perpendicular to the N-F line. Both N-F and B-M lines are marked on the external phantom shell to facilitate handset positioning [5].

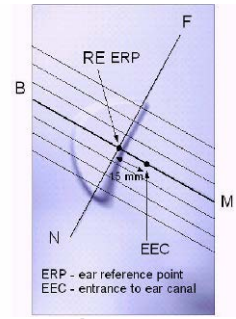

Figure 5-1
Close-Up Side view of ERP

5.2 HANDSET REFERENCE POINTS

Two imaginary lines on the handset were established: the vertical centerline and the horizontal line. The test device was placed in a normal operating position with the acoustic output located along the "vertical centerline" on the front of the device aligned to the "ear reference point" (See Figure 5-3). The acoustic output was than located at the same level as the center of the ear reference point. The test device was positioned so that the "vertical centerline" was bisecting the front surface of the handset at its top and bottom edges, positioning the "ear reference point" on the outer surface of the both the left and right head phantoms on the ear reference point.

Figure 5-2
Front, back and side view of SAM Twin Phantom

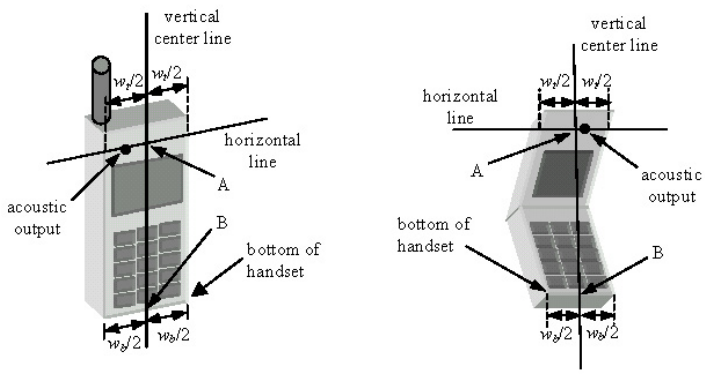

Figure 5-3
Handset Vertical Center & Horizontal Line Reference Points

© 2014 PCTEST Engineering Laboratory, Inc.

6 TEST CONFIGURATION POSITIONS FOR HANDSETS

6.1 Device Holder

The device holder is made out of low-loss POM material having the following dielectric parameters: relative permittivity ε = 3 and loss tangent δ = 0.02.

6.2 Positioning for Cheek

1. The test device was positioned with the device close to the surface of the phantom such that point A is on the (virtual) extension of the line passing through points RE and LE on the phantom (see Figure 6-1), such that the plane defined by the vertical center line and the horizontal line of the phone is approximately parallel to the sagittal plane of the phantom.

Figure 6-1 Front, Side and Top View of Cheek Position

2. The handset was translated towards the phantom along the line passing through RE & LE until the handset touches the pinna.
3. While maintaining the handset in this plane, the handset was rotated around the LE-RE line until the vertical centerline was in the reference plane.
4. The phone was then rotated around the vertical centerline until the phone (horizontal line) was symmetrical was respect to the line NF.
5. While maintaining the vertical centerline in the reference plane, keeping point A on the line passing through RE and LE, and maintaining the device contact with the ear, the device was rotated about the NF line until any point on the handset made contact with a phantom point below the ear (cheek) (See Figure 6-2).

6.3 Positioning for Ear / 15º Tilt

With the test device aligned in the “Cheek Position”:

1. While maintaining the orientation of the phone, the phone was retracted parallel to the reference plane far enough to enable a rotation of the phone by 15degrees.
2. The phone was then rotated around the horizontal line by 15 degrees.
3. While maintaining the orientation of the phone, the phone was moved parallel to the reference plane until any part of the handset touched the head. (In this position, point A was located on the line RE-LE). The tilted position is obtained when the contact is on the pinna. If the contact was at any location other than the pinna, the angle of the phone would then be reduced. In this situation, the tilted position was obtained when any part of the phone was in contact of the ear as well as a second part of the phone was in contact with the head (see Figure 6-2).

© 2014 PCTEST Engineering Laboratory, Inc.

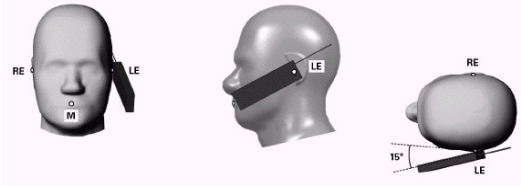

Figure 6-2 Front, Side and Top View of Ear/15º Tilt Position

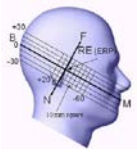

Figure 6-3
Side view w/ relevant markings

6.4 SAR Evaluations near the Mouth/Jaw Regions of the SAM Phantom

Antennas located near the bottom of a phone may require SAR measurements around the mouth and jaw regions of the SAM head phantom. This typically applies to clam-shell style phones that are generally longer in the unfolded normal use positions or to certain older style long rectangular phones. Per IEEE 1528-2013, a rotated SAM phantom is necessary to allow probe access to such regions. Both SAM heads of the TwinSAM-Chin20 are rotated 20 degrees around the NF line. Each head can be removed from the table for emptying and cleaning.

Under these circumstances, the following procedures apply, adopted from the FCC guidance on SAR handsets document FCC KDB Publication 648474 D04_v01. The SAR required in these regions of SAM should be measured using a flat phantom. The phone should be positioned with a separation distance of 4 mm between the ear reference point (ERP) and the outer surface of the flat phantom shell. While maintaining this distance at the ERP location, the low (bottom) edge of the phone should be lowered from the phantom to establish the same separation distance between the peak SAR location identified by the truncated partial SAR distribution measured with the SAM phantom. The distance from the peak SAR location to the phone is determined by the straight line passing perpendicularly through the phantom surface. When it is not feasible to maintain 4 mm separation at the ERP while also establishing the required separation at the peak SAR location, the top edge of the phone will be allowed to touch the phantom with a separation < 4 mm at the ERP. The phone should not be tilted to the left or right while placed in this inclined position to the flat phantom.

6.5 Body-Worn Accessory Configurations

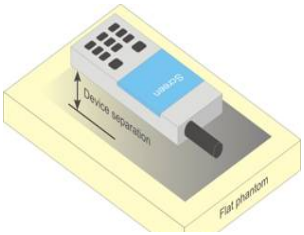

Body-worn operating configurations are tested with the belt-clips and holsters attached to the device and positioned against a flat phantom in a normal use configuration (see Figure 6-4). Per FCC KDB Publication 648474 D04v01, Body-worn accessory exposure is typically related to voice mode operations when handsets are carried in body-worn accessories. The body-worn accessory procedures in FCC KDB Publication 447498 D01v05 should be used to test for body-worn accessory SAR compliance, without a headset connected to it. This enables the test results for such configuration to be compatible with that required for hotspot mode when the body-worn accessory test separation distance is greater than or equal to that required for hotspot mode, when applicable. When the reported SAR for a body-worn accessory, measured without a headset connected to the handset, is > 1.2 W/kg, the highest reported SAR configuration for that wireless mode and frequency band should be repeated for that body-worn accessory with a headset attached to the handset.

Accessories for Body-worn operation configurations are divided into two categories: those that do not contain metallic components and those that do contain metallic components. When multiple accessories that do not contain metallic components are supplied with the device, the device is tested with only the accessory that dictates the closest spacing to the body. Then multiple accessories that contain metallic components are tested with the device with each accessory. If multiple accessories share an identical metallic component (i.e. the same metallic belt-clip used with different holsters with no other metallic components) only the accessory that dictates the closest spacing to the body is tested.

© 2014 PCTEST Engineering Laboratory, Inc.

Body-worn accessories may not always be supplied or available as options for some devices intended to be authorized for body-worn use. In this case, a test configuration with a separation distance between the back of the device and the flat phantom is used. Test position spacing was documented. Transmitters that are designed to operate in front of a person's face, as in push-to-talk configurations, are tested for SAR compliance with the front of the device positioned to face the flat phantom in head fluid. For devices that are carried next to the body such as a shoulder, waist or chest-worn transmitters, SAR compliance is tested with the accessories, including headsets and microphones, attached to the device and positioned against a flat phantom in a normal use configuration.

6.6 Extremity Exposure Configurations

Devices that are designed or intended for use on extremities or mainly operated in extremity only exposure conditions; i.e., hands, wrists, feet and ankles, may require extremity SAR evaluation. When the device also operates in close proximity to the user's body, SAR compliance for the body is also required. The 1-g body and 10-g extremity SAR Exclusion Thresholds found in KDB Publication 44798 D01v05 should be applied to determine SAR test requirements.

For smart phones with a display diagonal dimension > 15.0 cm or an overall diagonal dimension > 16.0 cm that provide similar mobile web access and multimedia support found in mini-tablets or UMPC minitablets that support voice calls next to the ear, the phablets procedures outlined in KDB Publication 648474 D04 v01r01DR04 should be applied to evaluate SAR compliance. A device marketed as phablets, regardless of form factors and operating characteristics must be tested as a phablet to determine SAR compliance. In addition to the normally required head and body-worn accessory SAR test procedures required for handsets, the UMPC mini-tablet procedures must also be applied to test the SAR of all surfaces and edges with an antenna <=25 mm from that surface or edge, in direct contact with the phantom, for 10-g SAR. The UMPC mini-tablet 1-g SAR at 5 mm is not required. When hotspot mode applies, 10-g extremity SAR is required only for the surfaces and edges with hotspot mode 1-g SAR scaled up to maximum output power tolerance > 1.2 W/kg.

6.7 Wireless Router Configurations

Some battery-operated handsets have the capability to transmit and receive user data through simultaneous transmission of WIFI simultaneously with a separate licensed transmitter. The FCC has provided guidance in FCC KDB Publication 941225 D06 v01 where SAR test considerations for handsets (L x W ≥ 9 cm x 5 cm) are based on a composite test separation distance of 10 mm from the front, back and edges of the device containing transmitting antennas within 2.5 cm of their edges, determined from general mixed use conditions for this type of devices. Since the hotspot SAR results may overlap with the body-worn accessory SAR requirements, the more conservative configurations can be considered, thus excluding some body-worn accessory SAR tests.

When the user enables the personal wireless router functions for the handset, actual operations include simultaneous transmission of both the WIFI transmitter and another licensed transmitter. Both transmitters often do not transmit at the same transmitting frequency and thus cannot be evaluated for SAR under actual use conditions due to the limitations of the SAR assessment probes. Therefore, SAR must be evaluated for each frequency transmission and mode separately and spatially summed with the WIFI transmitter according to FCC KDB Publication 447498 D01v05 publication procedures. The "Portable Hotspot" feature on the handset was NOT activated during SAR assessments, to ensure the SAR measurements were evaluated for a single transmission frequency RF signal at a time. The device utilizes power reduction under some portable hotspot conditions for SAR compliance.
There is mobile hotspot power reduction for Cell. CDMA/EVDO and PCS CDMA/EVDO. There is no power reduction for LTE Band 12/17, LTE Band 5, LTE Band 4, LTE Band 2 and WLAN modes. The reduced powers were confirmed via conducted power measurements at the RF port (See Section 9). Detailed description of the hotspot power reduction mechanism is included in the FCC filing.

© 2014 PCTEST Engineering Laboratory, Inc.

7 RF EXPOSURE LIMITS

7.1 Uncontrolled Environment

UNCONTROLLED ENVIRONMENTS are defined as locations where there is the exposure of individuals who have no knowledge or control of their exposure. The general population/uncontrolled exposure limits are applicable to situations in which the general public may be exposed or in which persons who are exposed as a consequence of their employment may not be made fully aware of the potential for exposure or cannot exercise control over their exposure. Members of the general public would come under this category when exposure is not employment-related; for example, in the case of a wireless transmitter that exposes persons in its vicinity.

7.2 Controlled Environment

CONTROLLED ENVIRONMENTS are defined as locations where there is exposure that may be incurred by persons who are aware of the potential for exposure, (i.e. as a result of employment or occupation). In general, occupational/controlled exposure limits are applicable to situations in which persons are exposed as a consequence of their employment, who have been made fully aware of the potential for exposure and can exercise control over their exposure. This exposure category is also applicable when the exposure is of a transient nature due to incidental passage through a location where the exposure levels may be higher than the general population/uncontrolled limits, but the exposed person is fully aware of the potential for exposure and can exercise control over his or her exposure by leaving the area or by some other appropriate means.

Table 7-1
SAR Human Exposure Specified in ANSI/IEEE C95.1-1992 and Health Canada Safety Code 6

HUMAN EXPOSURE LIMITS		
	UNCONTROLLED ENVIRONMENT *General Population* (W/kg) or (mW/g)	CONTROLLED ENVIRONMENT *Occupational* (W/kg) or (mW/g)
Peak Spatial Average SAR Head	1.6	8.0
Whole Body SAR	0.08	0.4
Peak Spatial Average SAR Hands, Feet, Ankle, Wrists, etc.	4.0	20

1. The Spatial Peak value of the SAR averaged over any 1 gram of tissue (defined as a tissue volume in the shape of a cube) and over the appropriate averaging time.
2. The Spatial Average value of the SAR averaged over the whole body.
3. The Spatial Peak value of the SAR averaged over any 10 grams of tissue (defined as a tissue volume in the shape of a cube) and over the appropriate averaging time.

© 2014 PCTEST Engineering Laboratory, Inc.

8 FCC MEASUREMENT PROCEDURES

Power measurements were performed using a base station simulator under digital average power.

8.1 Measured and Reported SAR

Per FCC KDB Publication 447498 D01v05, When SAR is not measured at the maximum power level allowed for production units, the results must be scaled to the maximum tune-up tolerance limit according to the power applied to the individual channels tested to determine compliance. For simultaneous transmission, the measured aggregate SAR must be scaled according to the sum of the differences between the maximum tune-up tolerance and actual power used to test each transmitter. When SAR is measured at or scaled to the maximum tune-up tolerance limit, the results are referred to as *reported* SAR. The highest *reported* SAR results are identified on the grant of equipment authorization according to procedures in KDB 690783 D01v01r02.

8.2 Procedures Used to Establish RF Signal for SAR

The following procedures are according to FCC KDB Publication 941225 D01 “SAR Measurement Procedures for 3G Devices” v02, October 2007.

The device was placed into a simulated call using a base station simulator in a RF shielded chamber. Establishing connections in this manner ensure a consistent means for testing SAR and are recommended for evaluating SAR [4]. Devices under test were evaluated prior to testing, with a fully charged battery and were configured to operate at maximum output power. In order to verify that the device was tested throughout the SAR test at maximum output power, the SAR measurement system measures a “point SAR” at an arbitrary reference point at the start and end of the 1 gram SAR evaluation, to assess for any power drifts during the evaluation. If the power drift deviated by more than 5%, the SAR test and drift measurements were repeated.

8.3 SAR Measurement Conditions for CDMA2000

The following procedures were performed according to FCC KDB Publication 941225 D01 “SAR Measurement Procedures for 3G Devices” v02, October 2007.

8.3.1 Output Power Verification

See 3GPP2 C.S0011/TIA-98-E as recommended by “SAR Measurement Procedures for 3G Devices” v02, October 2007. Maximum output power is verified on the High, Middle and Low channels according to procedures in section 4.4.5.2 of 3GPP2 C.S0011/TIA-98-E. SO55 tests were measured with power control bits in the “All Up” condition.

1. If the mobile station (MS) supports Reverse TCH RC 1 and Forward TCH RC 1, set up a call using Fundamental Channel Test Mode 1 (RC=1/1) with 9600 bps data rate only.
2. Under RC1, C.S0011 Table 4.4.5.2-1, Table 8-1 parameters were applied.
3. If the MS supports the RC 3 Reverse FCH, RC3 Reverse SCH_0 and demodulation of RC 3,4, or 5, set up a call using Supplemental Channel Test Mode 3 (RC 3/3) with 9600 bps Fundamental Channel and 9600 bps SCH0 data rate.
4. Under RC3, C.S0011 Table 4.4.5.2-2, Table 8-2 was applied.

© 2014 PCTEST Engineering Laboratory, Inc.

Table 8-1
Parameters for Max. Power for RC1

Parameter	Units	Value
I_{or}	dBm/1.23 MHz	-104
$\frac{\text{Pilot } E_c}{I_{or}}$	dB	-7
$\frac{\text{Traffic } E_c}{I_{or}}$	dB	-7.4

Table 8-2
Parameters for Max. Power for RC3

Parameter	Units	Value
I_{or}	dBm/1.23 MHz	-86
$\frac{\text{Pilot } E_c}{I_{or}}$	dB	-7
$\frac{\text{Traffic } E_c}{I_{or}}$	dB	-7.4

5. FCHs were configured at full rate for maximum SAR with “All Up” power control bits.

8.3.2 CDMA2000 1x Advanced

This device additionally supports 1x Advanced. Conducted powers were measured using SO75 with RC8 on the uplink and RC11 on the downlink per KDB Publication 941225 D02v02. Smart blanking was disabled for all measurements. The EUT was configured with forward power control Mode 000 and reverse power control at 400 bps. Conducted powers were measured on an Agilent 8960 Series 10 Wireless Communications Test Set, Model E5515C using the CDMA2000 1x Advanced application, Option E1962B-410.

Based on the maximum output power measured for 1x Advanced, SAR is required for 1x advanced when the maximum output for 1x Advanced is more than 0.25 dB higher than the maximum measured for 1x. Also, if the measured SAR in any 1x mode exposure conditions (head, body etc.) is larger than 1.2 W/kg, the highest of those configurations above 1.2 W/kg for each exposure condition in 1x Advanced has to be repeated. All measured SAR in 1x mode higher than 1.5 W/kg must be repeated for 1x Advanced.

8.3.3 Head SAR Measurements

SAR for head exposure configurations is measured in RC3 with the DUT configured to transmit at full rate using Loopback Service Option SO55. SAR for RC1 is not required when the maximum average output of each channel is less than ¼ dB higher than that measured in RC3. Otherwise, SAR is measured on the maximum output channel in RC1 using the exposure configuration that results in the highest SAR for that channel in RC3.

Head SAR was additionally evaluated using EVDO Rev. A to support compliance for VoIP operations. See Section 8.3.5 for EVDO Rev. A configuration parameters.

8.3.4 Body SAR Measurements

SAR for body exposure configurations is measured in RC3 with the DUT configured to transmit at full rate on FCH with all other code channels disabled using TDSO / SO32. SAR for multiple code channels (FCH + SCH_n) is not required when the maximum average output of each RF channel is less than ¼ dB higher than that measured with FCH only. Otherwise, SAR is measured on the maximum output channel (FCH + SCH_n) with FCH at full rate and SCH_0 enabled at 9600 bps using the exposure configuration that results in the highest SAR for that channel with FCH only. When multiple code channels are enabled, the DUT output may shift by more than 0.5 dB and lead to higher SAR drifts and SCH dropouts. Body SAR was measured using TDSO / SO32 with power control bits in the “All Up”

Body SAR in RC1 is not required when the maximum average output of each channel is less than ¼ dB higher than that measured in RC3. Otherwise, SAR is measured on the maximum output channel in RC1; with Loopback Service Option SO55, at full rate, using the body exposure configuration that results in the highest SAR for that channel in RC3.

© 2014 PCTEST Engineering Laboratory, Inc.

8.3.5 Handsets with EVDO

For handsets with Ev-Do capabilities, when the maximum average output of each channel in Rev. 0 is less than ¼ dB higher than that measured in RC3 (1x RTT), body SAR for EV-DO is not required. Otherwise, SAR for Rev. 0 is measured on the maximum output channel at 153.6 kbps using the body exposure configuration that results in the highest SAR for that channel in RC3. SAR for Rev. A is not required when the maximum average output of each channel is less than that measured in Rev. 0 or less than ¼ dB higher than that measured in RC3. Otherwise, SAR is measured on the maximum output channel for Rev. A using a Reverse Data Channel payload size of 4096 bits and a Termination Target of 16 slots defined for Subtype 2 Physical Layer configurations. A Forward Traffic Channel data rate corresponding to the 2-slot version of 307.2 kbps with the ACK Channel transmitting in all slots would be configured in the downlink for both Rev. 0 and Rev. A.

8.3.6 Body SAR Measurements for EVDO Hotspot

Hotspot Body SAR is measured using Subtype 0/1 Physical Layer configurations for Rev. 0 per KDB Publication 941225 D01 procedures for "1x Ev-Do data Devices". SAR for Subtype 2 Physical layer configurations is not required for Rev. A when the maximum average output of each RF channels is less than that measured in Subtype 0/1 Physical layer configurations. Otherwise, SAR is measured on the maximum output channel for Rev. A using the exposure configuration that results in the highest SAR for the RF channels in Rev. 0. The AT is tested with a Reverse Data Channel rate of 153.6 kbps in Subtype 0/1 Physical Layer configurations; and a Reverse Data Channel payload size of 4096 bits and Termination Target of 16 slots in Subtype 2 Physical Layer configurations.

SAR is not required for 1x RTT for Ev-Do devices that also support 1x RTT voice and/or data operations, when the maximum average output of each channel is less than 1⁄4 dB higher than that measured in Subtype 0/1 Physical Layer configurations for Rev. 0. Otherwise, CDMA "Body-SAR Measurement" procedures for "CDMA 2000 1x Handsets" were applied.

8.4 SAR Measurement Conditions for LTE

LTE modes were tested according to FCC KDB 941225 D05v02 publication. Please see notes after the tabulated SAR data for required test configurations. Establishing connections with base station simulators ensure a consistent means for testing SAR and are recommended for evaluating SAR [4]. The R&S CMW500 was used for LTE output power measurements and SAR testing. Closed loop power control was used so the UE transmits with maximum output power during SAR testing. SAR tests were performed with the same number of RB and RB offsets transmitting on all TTI frames (maximum TTI).

8.4.1 Spectrum Plots for RB Configurations

A properly configured base station simulator was used for SAR tests and power measurements. Therefore, spectrum plots for RB configurations were not required to be included in this report.

8.4.2 MPR

MPR is permanently implemented for this device by the manufacturer. The specific manufacturer target MPR is indicated alongside the SAR results. MPR is enabled for this device, according to 3GPP TS36.101 Section 6.2.3 – 6.2.5 under Table 6.2.3-1.

8.4.3 A-MPR

A-MPR (Additional MPR) has been disabled for all SAR tests by setting NS=01 on the base station simulator.

© 2014 PCTEST Engineering Laboratory, Inc.

8.4.4 Required RB Size and RB Offsets for SAR Testing

According to FCC KDB 941225 D05v02r01:

a. Per Section 5.2.1, SAR is required for QPSK 1 RB Allocation for the largest bandwidth
   i. The required channel and offset combination with the highest maximum output power is required for SAR.
   ii. When the reported SAR is ≤ 0.8 W/kg, testing of the remaining RB offset configurations and required test channels is not required. Otherwise, SAR is required for the remaining required test channels using the RB offset configuration with highest output power for that channel.
   iii. When the reported SAR for a required test channel is > 1.45 W/kg, SAR is required for all RB offset configurations for that channel.
b. Per Section 5.2.2, SAR is required for 50% RB allocation using the largest bandwidth following the same procedures outlined in Section 5.2.1.
c. Per Section 5.2.3, QPSK SAR is not required for the 100% allocation when the highest maximum output power for the 100% allocation is less than the highest maximum output power of the 1 RB and 50% RB allocations and the reported SAR for the 1 RB and 50% RB allocations is < 0.8 W/kg.
d. Per Section 5.2.4 and 5.3, SAR tests for higher order modulations and lower bandwidths configurations are not required when the conducted power of the required test configurations determined by Sections 5.2.1 through 5.2.3 is less than or equal to ½ dB higher than the equivalent configuration using QPSK modulation and when the QPSK SAR for those configurations is <1.45 W/kg.

8.5 SAR Testing with 802.11 Transmitters

Normal network operating configurations are not suitable for measuring the SAR of 802.11 a/b/g/n/ac transmitters. Unpredictable fluctuations in network traffic and antenna diversity conditions can introduce undesirable variations in SAR results. The SAR for these devices should be measured using chipset based test mode software to ensure the results are consistent and reliable. See KDB Publication 248227 D01v01r02 for more details.

8.5.1 General Device Setup

Chipset based test mode software is hardware dependent and generally varies among manufacturers. The device operating parameters established in test mode for SAR measurements must be identical to those programmed in production units, including output power levels, amplifier gain settings and other RF performance tuning parameters. The test frequencies should correspond to actual channel frequencies defined for domestic use. SAR for devices with switched diversity should be measured with only one antenna transmitting at a time during each SAR measurement, according to a fixed modulation and data rate. The same data pattern should be used for all measurements.

8.5.2 Frequency Channel Configurations [24]

For 2.4 GHz, the highest average RF output power channel between the low, mid and high channel at the lowest data rate was selected for SAR evaluation in 802.11b mode. 802.11g/n modes and higher data rates for 802.11b were additionally evaluated for SAR if the output power of the respective mode was 0.25 dB or higher than the powers of the SAR configurations tested in the 802.11b mode.

For 5 GHz, the highest average RF output power channel across the default test channels at the lowest data rate was selected for SAR evaluation in 802.11a. When the adjacent channels are higher in power then the default channels, these “required channels” were considered instead of the default channels for SAR testing. 802.11n modes and higher data rates for 802.11a/n were evaluated only if the respective mode was higher than 0.25 dB or more than the 802.11a mode. 802.11ac SAR was

© 2014 PCTEST Engineering Laboratory, Inc.

evaluated for highest 802.11a configuration in each 5 GHz band and each exposure condition. 802.11ac modes were additionally evaluated for SAR if the output power for the respective mode was more than 0.25 dB higher than powers of 802.11a modes.

If the maximum extrapolated peak SAR of the zoom scan for the highest output channel was less than 1.6 W/kg and if the 1g averaged SAR was less than 0.8 W/kg, SAR testing was not required for the other test channels in the band.

8.5.3 MIMO SAR considerations

Per KDB 248227, SAR for MIMO was measured with both transmitting simultaneously and was evaluated independently of SISO operation. For 2.4 and 5 GHz MIMO, IEEE 802.11n 20 MHz bandwidth was evaluated. Other IEEE 802.11 modes and bandwidths were not investigated for MIMO operations since the maximum allowed output power (including tolerance) was not higher for these modes.

© 2014 PCTEST Engineering Laboratory, Inc.

9 RF CONDUCTED POWERS

9.1 CDMA Conducted Powers

Maximum CDMA/EVDO Average RF Conducted Powers

Band	Channel	Frequency	SO55 [dBm]	SO55 [dBm]	SO75 [dBm]	TDSO SO32 [dBm]	TDSO SO32 [dBm]	1x EvDO Rev. 0 [dBm]	1x EvDO Rev. A [dBm]
	F-RC	MHz	RC1	RC3	RC11	FCH+SCH	FCH	(RTAP)	(RETAP)
Cellular	1013	824.7	24.25	24.38	24.20	24.43	24.43	24.39	24.44
	384	836.52	24.13	24.26	24.10	24.30	24.35	24.40	24.35
	777	848.31	24.21	24.33	24.18	24.40	24.39	24.32	24.40
PCS	25	1851.25	24.08	24.27	24.06	24.23	24.42	24.21	24.20
	600	1880	24.12	24.24	24.04	24.22	24.42	24.25	24.22
	1175	1908.75	23.78	24.00	23.76	23.87	24.07	23.92	23.90

Reduced CDMA/EVDO Average RF Conducted Powers (Representing Hotspot Mode)

Band	Channel	Frequency	SO55 [dBm]	SO55 [dBm]	SO75 [dBm]	TDSO SO32 [dBm]	TDSO SO32 [dBm]	1x EvDO Rev. 0 [dBm]	1x EvDO Rev. A [dBm]
	F-RC	MHz	RC1	RC3	RC11	FCH+SCH	FCH	(RTAP)	(RETAP)
Cellular	1013	824.7	22.04	22.08	21.93	22.05	22.06	21.98	21.96
	384	836.52	22.13	22.12	22.12	22.11	22.10	22.08	22.04
	777	848.31	22.18	22.26	22.18	22.20	22.17	22.14	22.11
PCS	25	1851.25	22.23	22.27	22.27	22.35	22.25	22.26	22.24
	600	1880	22.15	22.18	22.00	22.25	22.20	22.08	22.04
	1175	1908.75	22.10	22.11	22.08	22.09	22.07	22.14	22.08

Note: RC1 is only applicable for IS-95 compatibility.

Per KDB Publication 941225 D01v02:

1. Head SAR was tested with SO55 RC3. SO55 RC1 was not required since the average output power was not more than 0.25 dB than the SO55 RC3 powers.
2. Body-Worn SAR was tested with 1x RTT with TDSO / SO32 FCH Only. EVDO and TDSO / SO32 FCH+SCH SAR tests were not required since the average output power was not more than 0.25 dB higher than the TDSO / SO32 FCH only powers.
3. Hotspot SAR is measured using Subtype 0/1 Physical Layer configurations for Rev. 0. If the average output power of Subtype 2 for Rev. A is less than the Rev. 0 power levels, then Rev. A SAR is not required. Otherwise, SAR is measured on the maximum output channel for Rev. A using the exposure configuration that results in the highest SAR for that RF channel in Rev. 0. SAR is not required for 1x RTT for Ev-Do hotspot devices when the maximum average output of each channel is less than 1⁄4 dB higher than that measured in Subtype 0/1 Physical Layer configurations for Rev. 0
4. CDMA 1x-RTT SAR was additionally required to be evaluated for Hotspot exposure conditions to support simultaneous transmission capabilities.
5. Head SAR was additionally evaluated with EVDO Rev. A to determine compliance for held-to-ear VoIP operations.

© 2014 PCTEST Engineering Laboratory, Inc.

Per KDB Publication 941225 D02v02

1. CDMA 1X Advanced technology was not required for SAR since the maximum output powers for 1x Advanced was not more than 0.25 dB higher than the maximum measured powers for 1x and the measured SAR in any 1x mode exposure conditions was not greater than 1.2 W/kg. See Section 8.3.2 for 1x Advanced test set up.

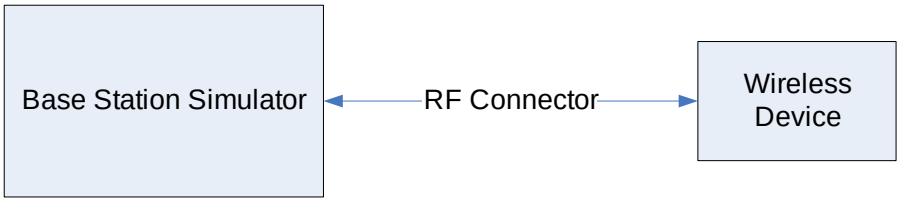

Figure 9-1
Power Measurement Setup

9.2 LTE Conducted Powers

9.2.1 LTE Band 12

Table 9-1
LTE Band 12 Conducted Powers - 10 MHz Bandwidth

	Frequency [MHz]	Channel	Bandwidth [MHz]	Modulation	RB Size	RB Offset	Conducted Power [dBm]	MPR Allowed per 3GPP [dB]	MPR [dB]
Mid	707.5	23095	10	QPSK	1	0	23.01	0	0
	707.5	23095	10	QPSK	1	25	**23.08**	0	0
	707.5	23095	10	QPSK	1	49	23.06	0	0
	707.5	23095	10	QPSK	25	0	**22.09**	0-1	1
	707.5	23095	10	QPSK	25	12	22.06	0-1	1
	707.5	23095	10	QPSK	25	25	22.04	0-1	1
	707.5	23095	10	QPSK	50	0	22.08	0-1	1
	707.5	23095	10	16QAM	1	0	22.20	0-1	1
	707.5	23095	10	16QAM	1	25	22.22	0-1	1
	707.5	23095	10	16QAM	1	49	22.18	0-1	1
	707.5	23095	10	16QAM	25	0	21.10	0-2	2
	707.5	23095	10	16QAM	25	12	21.10	0-2	2
	707.5	23095	10	16QAM	25	25	21.13	0-2	2
	707.5	23095	10	16QAM	50	0	21.14	0-2	2

Note: LTE Band 12 at 10 MHz bandwidth does not support three non-overlapping channels. Per KDB Publication 941225 D05v02, when a device supports overlapping channel assignment in a channel bandwidth configuration, the middle channel of the group of overlapping channels should be selected for testing.

© 2014 PCTEST Engineering Laboratory, Inc.

Table 9-2
LTE Band 12 Conducted Powers - 5 MHz Bandwidth

	Frequency [MHz]	Channel	Bandwidth [MHz]	Modulation	RB Size	RB Offset	Conducted Power [dBm]	MPR Allowed per 3GPP [dB]	MPR [dB]
Low	701.5	23035	5	QPSK	1	0	23.09	0	0
	701.5	23035	5	QPSK	1	12	23.02	0	0
	701.5	23035	5	QPSK	1	24	23.03	0	0
	701.5	23035	5	QPSK	12	0	22.05	0-1	1
	701.5	23035	5	QPSK	12	6	22.09	0-1	1
	701.5	23035	5	QPSK	12	13	22.03	0-1	1
	701.5	23035	5	QPSK	25	0	22.01	0-1	1
	701.5	23035	5	16-QAM	1	0	22.04	0-1	1
	701.5	23035	5	16-QAM	1	12	22.08	0-1	1
	701.5	23035	5	16-QAM	1	24	22.08	0-1	1
	701.5	23035	5	16-QAM	12	0	21.11	0-2	2
	701.5	23035	5	16-QAM	12	6	21.15	0-2	2
	701.5	23035	5	16-QAM	12	13	21.12	0-2	2
	701.5	23035	5	16-QAM	25	0	21.07	0-2	2
Mid	707.5	23095	5	QPSK	1	0	23.11	0	0
	707.5	23095	5	QPSK	1	12	23.05	0	0
	707.5	23095	5	QPSK	1	24	23.04	0	0
	707.5	23095	5	QPSK	12	0	22.05	0-1	1
	707.5	23095	5	QPSK	12	6	22.04	0-1	1
	707.5	23095	5	QPSK	12	13	22.01	0-1	1
	707.5	23095	5	QPSK	25	0	22.06	0-1	1
	707.5	23095	5	16-QAM	1	0	22.08	0-1	1
	707.5	23095	5	16-QAM	1	12	22.04	0-1	1
	707.5	23095	5	16-QAM	1	24	22.07	0-1	1
	707.5	23095	5	16-QAM	12	0	21.15	0-2	2
	707.5	23095	5	16-QAM	12	6	21.03	0-2	2
	707.5	23095	5	16-QAM	12	13	21.00	0-2	2
	707.5	23095	5	16-QAM	25	0	21.08	0-2	2
High	713.5	23155	5	QPSK	1	0	23.01	0	0
	713.5	23155	5	QPSK	1	12	23.03	0	0
	713.5	23155	5	QPSK	1	24	23.04	0	0
	713.5	23155	5	QPSK	12	0	22.13	0-1	1
	713.5	23155	5	QPSK	12	6	22.12	0-1	1
	713.5	23155	5	QPSK	12	13	22.16	0-1	1
	713.5	23155	5	QPSK	25	0	22.11	0-1	1
	713.5	23155	5	16-QAM	1	0	22.16	0-1	1
	713.5	23155	5	16-QAM	1	12	22.02	0-1	1
	713.5	23155	5	16-QAM	1	24	22.05	0-1	1
	713.5	23155	5	16-QAM	12	0	21.06	0-2	2
	713.5	23155	5	16-QAM	12	6	21.06	0-2	2
	713.5	23155	5	16-QAM	12	13	21.11	0-2	2
	713.5	23155	5	16-QAM	25	0	21.13	0-2	2

Table 9-3
LTE Band 12 Conducted Powers - 3 MHz Bandwidth

	Frequency [MHz]	Channel	Bandwidth [MHz]	Modulation	RB Size	RB Offset	Conducted Power [dBm]	MPR Allowed per 3GPP [dB]	MPR [dB]
Low	700.5	23025	3	QPSK	1	0	23.19	0	0
	700.5	23025	3	QPSK	1	7	23.15	0	0
	700.5	23025	3	QPSK	1	14	23.21	0	0
	700.5	23025	3	QPSK	8	0	22.13	0-1	1
	700.5	23025	3	QPSK	8	4	22.09	0-1	1
	700.5	23025	3	QPSK	8	7	22.15	0-1	1
	700.5	23025	3	QPSK	15	0	22.17	0-1	1
	700.5	23025	3	16-QAM	1	0	22.21	0-1	1
	700.5	23025	3	16-QAM	1	7	22.14	0-1	1
	700.5	23025	3	16-QAM	1	14	22.16	0-1	1
	700.5	23025	3	16-QAM	8	0	21.12	0-2	2
	700.5	23025	3	16-QAM	8	4	21.05	0-2	2
	700.5	23025	3	16-QAM	8	7	21.06	0-2	2
	700.5	23025	3	16-QAM	15	0	21.18	0-2	2
Mid	707.5	23095	3	QPSK	1	0	23.10	0	0
	707.5	23095	3	QPSK	1	7	23.00	0	0
	707.5	23095	3	QPSK	1	14	23.08	0	0
	707.5	23095	3	QPSK	8	0	22.12	0-1	1
	707.5	23095	3	QPSK	8	4	22.01	0-1	1
	707.5	23095	3	QPSK	8	7	22.09	0-1	1
	707.5	23095	3	QPSK	15	0	22.00	0-1	1
	707.5	23095	3	16-QAM	1	0	22.42	0-1	1
	707.5	23095	3	16-QAM	1	7	22.31	0-1	1
	707.5	23095	3	16-QAM	1	14	22.41	0-1	1
	707.5	23095	3	16-QAM	8	0	21.07	0-2	2
	707.5	23095	3	16-QAM	8	4	21.08	0-2	2
	707.5	23095	3	16-QAM	8	7	21.00	0-2	2
	707.5	23095	3	16-QAM	15	0	21.02	0-2	2
High	714.5	23165	3	QPSK	1	0	23.05	0	0
	714.5	23165	3	QPSK	1	7	23.03	0	0
	714.5	23165	3	QPSK	1	14	23.11	0	0
	714.5	23165	3	QPSK	8	0	22.06	0-1	1
	714.5	23165	3	QPSK	8	4	22.04	0-1	1
	714.5	23165	3	QPSK	8	7	22.06	0-1	1
	714.5	23165	3	QPSK	15	0	22.00	0-1	1
	714.5	23165	3	16-QAM	1	0	22.08	0-1	1
	714.5	23165	3	16-QAM	1	7	22.05	0-1	1
	714.5	23165	3	16-QAM	1	14	22.09	0-1	1
	714.5	23165	3	16-QAM	8	0	21.03	0-2	2
	714.5	23165	3	16-QAM	8	4	21.07	0-2	2
	714.5	23165	3	16-QAM	8	7	21.07	0-2	2
	714.5	23165	3	16-QAM	15	0	21.05	0-2	2

© 2014 PCTEST Engineering Laboratory, Inc.

Table 9-4
LTE Band 12 Conducted Powers – 1.4 MHz Bandwidth

	Frequency [MHz]	Channel	Bandwidth [MHz]	Modulation	RB Size	RB Offset	Conducted Power [dBm]	MPR Allowed per 3GPP [dB]	MPR [dB]
Low	699.7	23017	1.4	QPSK	1	0	23.16	0	0
	699.7	23017	1.4	QPSK	1	2	23.13	0	0
	699.7	23017	1.4	QPSK	1	5	23.03	0	0
	699.7	23017	1.4	QPSK	3	0	23.09	0	0
	699.7	23017	1.4	QPSK	3	2	23.04	0	0
	699.7	23017	1.4	QPSK	3	3	23.08	0	0
	699.7	23017	1.4	QPSK	6	0	22.12	0-1	1
	699.7	23017	1.4	16-QAM	1	0	22.22	0-1	1
	699.7	23017	1.4	16-QAM	1	2	22.14	0-1	1
	699.7	23017	1.4	16-QAM	1	5	22.03	0-1	1
	699.7	23017	1.4	16-QAM	3	0	22.05	0-1	1
	699.7	23017	1.4	16-QAM	3	2	22.00	0-1	1
	699.7	23017	1.4	16-QAM	3	3	22.04	0-1	1
	699.7	23017	1.4	16-QAM	6	0	21.08	0-2	2
Mid	707.5	23095	1.4	QPSK	1	0	23.17	0	0
	707.5	23095	1.4	QPSK	1	2	23.13	0	0
	707.5	23095	1.4	QPSK	1	5	23.09	0	0
	707.5	23095	1.4	QPSK	3	0	23.08	0	0
	707.5	23095	1.4	QPSK	3	2	23.01	0	0
	707.5	23095	1.4	QPSK	3	3	23.05	0	0
	707.5	23095	1.4	QPSK	6	0	22.30	0-1	1
	707.5	23095	1.4	16-QAM	1	0	22.23	0-1	1
	707.5	23095	1.4	16-QAM	1	2	22.14	0-1	1
	707.5	23095	1.4	16-QAM	1	5	22.09	0-1	1
	707.5	23095	1.4	16-QAM	3	0	22.06	0-1	1
	707.5	23095	1.4	16-QAM	3	2	22.04	0-1	1
	707.5	23095	1.4	16-QAM	3	3	22.06	0-1	1
	707.5	23095	1.4	16-QAM	6	0	21.03	0-2	2
High	715.3	23173	1.4	QPSK	1	0	23.08	0	0
	715.3	23173	1.4	QPSK	1	2	23.06	0	0
	715.3	23173	1.4	QPSK	1	5	23.03	0	0
	715.3	23173	1.4	QPSK	3	0	23.03	0	0
	715.3	23173	1.4	QPSK	3	2	23.01	0	0
	715.3	23173	1.4	QPSK	3	3	23.02	0	0
	715.3	23173	1.4	QPSK	6	0	22.05	0-1	1
	715.3	23173	1.4	16-QAM	1	0	22.07	0-1	1
	715.3	23173	1.4	16-QAM	1	2	22.09	0-1	1
	715.3	23173	1.4	16-QAM	1	5	22.04	0-1	1
	715.3	23173	1.4	16-QAM	3	0	22.02	0-1	1
	715.3	23173	1.4	16-QAM	3	2	22.00	0-1	1
	715.3	23173	1.4	16-QAM	3	3	22.03	0-1	1
	715.3	23173	1.4	16-QAM	6	0	21.07	0-2	2

9.2.2 LTE Band 5 (Cell)

Table 9-5
LTE Band 5 (Cell) Conducted Powers - 10 MHz Bandwidth

	Frequency [MHz]	Channel	Bandwidth [MHz]	Modulation	RB Size	RB Offset	Conducted Power [dBm]	MPR Allowed per 3GPP [dB]	MPR [dB]
Mid	836.5	20525	10	QPSK	1	0	24.35	0	0
	836.5	20525	10	QPSK	1	25	24.11	0	0
	836.5	20525	10	QPSK	1	49	**24.46**	0	0
	836.5	20525	10	QPSK	25	0	**23.08**	0-1	1
	836.5	20525	10	QPSK	25	12	23.03	0-1	1
	836.5	20525	10	QPSK	25	25	23.07	0-1	1
	836.5	20525	10	QPSK	50	0	23.06	0-1	1
	836.5	20525	10	16QAM	1	0	23.28	0-1	1
	836.5	20525	10	16QAM	1	25	23.04	0-1	1
	836.5	20525	10	16QAM	1	49	23.26	0-1	1
	836.5	20525	10	16QAM	25	0	22.17	0-2	2
	836.5	20525	10	16QAM	25	12	22.07	0-2	2
	836.5	20525	10	16QAM	25	25	22.19	0-2	2
	836.5	20525	10	16QAM	50	0	22.12	0-2	2

Note: LTE Band 5 (Cell) at 10 MHz bandwidth does not support three non-overlapping channels. Per KDB Publication 941225 D05v02, when a device supports overlapping channel assignment in a channel bandwidth configuration, the middle channel of the group of overlapping channels should be selected for testing.

© 2014 PCTEST Engineering Laboratory, Inc.

Table 9-6
LTE Band 5 (Cell) Conducted Powers - 5 MHz Bandwidth

	Frequency [MHz]	Channel	Bandwidth [MHz]	Modulation	RB Size	RB Offset	Conducted Power [dBm]	MPR Allowed per 3GPP [dB]	MPR [dB]
Low	826.5	20425	5	QPSK	1	0	24.28	0	0
	826.5	20425	5	QPSK	1	12	24.30	0	0
	826.5	20425	5	QPSK	1	24	24.30	0	0
	826.5	20425	5	QPSK	12	0	23.01	0-1	1
	826.5	20425	5	QPSK	12	6	23.00	0-1	1
	826.5	20425	5	QPSK	12	13	23.07	0-1	1
	826.5	20425	5	QPSK	25	0	22.97	0-1	1
	826.5	20425	5	16-QAM	1	0	23.39	0-1	1
	826.5	20425	5	16-QAM	1	12	23.26	0-1	1
	826.5	20425	5	16-QAM	1	24	23.08	0-1	1
	826.5	20425	5	16-QAM	12	0	22.04	0-2	2
	826.5	20425	5	16-QAM	12	6	22.05	0-2	2
	826.5	20425	5	16-QAM	12	13	22.02	0-2	2
	826.5	20425	5	16-QAM	25	0	22.09	0-2	2
Mid	836.5	20525	5	QPSK	1	0	24.16	0	0
	836.5	20525	5	QPSK	1	12	24.15	0	0
	836.5	20525	5	QPSK	1	24	24.04	0	0
	836.5	20525	5	QPSK	12	0	22.96	0-1	1
	836.5	20525	5	QPSK	12	6	23.05	0-1	1
	836.5	20525	5	QPSK	12	13	22.98	0-1	1
	836.5	20525	5	QPSK	25	0	22.94	0-1	1
	836.5	20525	5	16-QAM	1	0	23.42	0-1	1
	836.5	20525	5	16-QAM	1	12	23.38	0-1	1
	836.5	20525	5	16-QAM	1	24	23.29	0-1	1
	836.5	20525	5	16-QAM	12	0	22.05	0-2	2
	836.5	20525	5	16-QAM	12	6	22.04	0-2	2
	836.5	20525	5	16-QAM	12	13	22.03	0-2	2
	836.5	20525	5	16-QAM	25	0	22.09	0-2	2
High	846.5	20625	5	QPSK	1	0	24.27	0	0
	846.5	20625	5	QPSK	1	12	24.20	0	0
	846.5	20625	5	QPSK	1	24	23.76	0	0
	846.5	20625	5	QPSK	12	0	22.96	0-1	1
	846.5	20625	5	QPSK	12	6	22.92	0-1	1
	846.5	20625	5	QPSK	12	13	23.03	0-1	1
	846.5	20625	5	QPSK	25	0	22.95	0-1	1
	846.5	20625	5	16-QAM	1	0	23.04	0-1	1
	846.5	20625	5	16-QAM	1	12	23.03	0-1	1
	846.5	20625	5	16-QAM	1	24	23.01	0-1	1
	846.5	20625	5	16-QAM	12	0	21.96	0-2	2
	846.5	20625	5	16-QAM	12	6	21.95	0-2	2
	846.5	20625	5	16-QAM	12	13	22.08	0-2	2
	846.5	20625	5	16-QAM	25	0	22.02	0-2	2

Table 9-7
LTE Band 5 (Cell) Conducted Powers - 3 MHz Bandwidth

	Frequency [MHz]	Channel	Bandwidth [MHz]	Modulation	RB Size	RB Offset	Conducted Power [dBm]	MPR Allowed per 3GPP [dB]	MPR [dB]
Low	825.5	20415	3	QPSK	1	0	24.06	0	0
	825.5	20415	3	QPSK	1	7	23.96	0	0
	825.5	20415	3	QPSK	1	14	24.08	0	0
	825.5	20415	3	QPSK	8	0	23.10	0-1	1
	825.5	20415	3	QPSK	8	4	23.05	0-1	1
	825.5	20415	3	QPSK	8	7	22.99	0-1	1
	825.5	20415	3	QPSK	15	0	23.02	0-1	1
	825.5	20415	3	16-QAM	1	0	23.24	0-1	1
	825.5	20415	3	16-QAM	1	7	23.22	0-1	1
	825.5	20415	3	16-QAM	1	14	23.33	0-1	1
	825.5	20415	3	16-QAM	8	0	21.92	0-2	2
	825.5	20415	3	16-QAM	8	4	21.97	0-2	2
	825.5	20415	3	16-QAM	8	7	21.94	0-2	2
	825.5	20415	3	16-QAM	15	0	22.15	0-2	2
Mid	836.5	20525	3	QPSK	1	0	23.96	0	0
	836.5	20525	3	QPSK	1	7	23.85	0	0
	836.5	20525	3	QPSK	1	14	23.96	0	0
	836.5	20525	3	QPSK	8	0	22.94	0-1	1
	836.5	20525	3	QPSK	8	4	22.83	0-1	1
	836.5	20525	3	QPSK	8	7	22.89	0-1	1
	836.5	20525	3	QPSK	15	0	22.95	0-1	1
	836.5	20525	3	16-QAM	1	0	23.29	0-1	1
	836.5	20525	3	16-QAM	1	7	23.20	0-1	1
	836.5	20525	3	16-QAM	1	14	23.28	0-1	1
	836.5	20525	3	16-QAM	8	0	21.93	0-2	2
	836.5	20525	3	16-QAM	8	4	21.80	0-2	2
	836.5	20525	3	16-QAM	8	7	21.81	0-2	2
	836.5	20525	3	16-QAM	15	0	22.01	0-2	2
High	847.5	20635	3	QPSK	1	0	23.77	0	0
	847.5	20635	3	QPSK	1	7	23.75	0	0
	847.5	20635	3	QPSK	1	14	23.76	0	0
	847.5	20635	3	QPSK	8	0	22.84	0-1	1
	847.5	20635	3	QPSK	8	4	22.95	0-1	1
	847.5	20635	3	QPSK	8	7	22.88	0-1	1
	847.5	20635	3	QPSK	15	0	22.87	0-1	1
	847.5	20635	3	16-QAM	1	0	23.06	0-1	1
	847.5	20635	3	16-QAM	1	7	23.06	0-1	1
	847.5	20635	3	16-QAM	1	14	23.07	0-1	1
	847.5	20635	3	16-QAM	8	0	22.01	0-2	2
	847.5	20635	3	16-QAM	8	4	21.95	0-2	2
	847.5	20635	3	16-QAM	8	7	21.90	0-2	2
	847.5	20635	3	16-QAM	15	0	21.90	0-2	2

© 2014 PCTEST Engineering Laboratory, Inc.

Table 9-8
LTE Band 5 (Cell) Conducted Powers – 1.4 MHz Bandwidth

	Frequency [MHz]	Channel	Bandwidth [MHz]	Modulation	RB Size	RB Offset	Conducted Power [dBm]	MPR Allowed per 3GPP [dB]	MPR [dB]
Low	824.7	20407	1.4	QPSK	1	0	24.22	0	0
	824.7	20407	1.4	QPSK	1	2	24.20	0	0
	824.7	20407	1.4	QPSK	1	5	24.20	0	0
	824.7	20407	1.4	QPSK	3	0	24.08	0	0
	824.7	20407	1.4	QPSK	3	2	24.06	0	0
	824.7	20407	1.4	QPSK	3	3	24.09	0	0
	824.7	20407	1.4	QPSK	6	0	23.05	0-1	1
	824.7	20407	1.4	16-QAM	1	0	22.86	0-1	1
	824.7	20407	1.4	16-QAM	1	2	22.70	0-1	1
	824.7	20407	1.4	16-QAM	1	5	22.80	0-1	1
	824.7	20407	1.4	16-QAM	3	0	22.92	0-1	1
	824.7	20407	1.4	16-QAM	3	2	23.00	0-1	1
	824.7	20407	1.4	16-QAM	3	3	22.96	0-1	1
	824.7	20407	1.4	16-QAM	6	0	22.15	0-2	2
Mid	836.5	20525	1.4	QPSK	1	0	24.14	0	0
	836.5	20525	1.4	QPSK	1	2	24.08	0	0
	836.5	20525	1.4	QPSK	1	5	24.15	0	0
	836.5	20525	1.4	QPSK	3	0	23.98	0	0
	836.5	20525	1.4	QPSK	3	2	23.91	0	0
	836.5	20525	1.4	QPSK	3	3	23.97	0	0
	836.5	20525	1.4	QPSK	6	0	22.92	0-1	1
	836.5	20525	1.4	16-QAM	1	0	22.76	0-1	1
	836.5	20525	1.4	16-QAM	1	2	22.67	0-1	1
	836.5	20525	1.4	16-QAM	1	5	22.75	0-1	1
	836.5	20525	1.4	16-QAM	3	0	22.83	0-1	1
	836.5	20525	1.4	16-QAM	3	2	22.84	0-1	1
	836.5	20525	1.4	16-QAM	3	3	22.88	0-1	1
	836.5	20525	1.4	16-QAM	6	0	22.10	0-2	2
High	848.3	20643	1.4	QPSK	1	0	24.07	0	0
	848.3	20643	1.4	QPSK	1	2	24.08	0	0
	848.3	20643	1.4	QPSK	1	5	24.13	0	0
	848.3	20643	1.4	QPSK	3	0	24.10	0	0
	848.3	20643	1.4	QPSK	3	2	24.05	0	0
	848.3	20643	1.4	QPSK	3	3	24.00	0	0
	848.3	20643	1.4	QPSK	6	0	23.01	0-1	1
	848.3	20643	1.4	16-QAM	1	0	22.97	0-1	1
	848.3	20643	1.4	16-QAM	1	2	22.97	0-1	1
	848.3	20643	1.4	16-QAM	1	5	22.85	0-1	1
	848.3	20643	1.4	16-QAM	3	0	22.92	0-1	1
	848.3	20643	1.4	16-QAM	3	2	22.90	0-1	1
	848.3	20643	1.4	16-QAM	3	3	22.89	0-1	1
	848.3	20643	1.4	16-QAM	6	0	22.01	0-2	2

9.2.3 LTE Band 4 (AWS)

Table 9-9
LTE Band 4 (AWS) Conducted Powers - 20 MHz Bandwidth

	Frequency [MHz]	Channel	Bandwidth [MHz]	Modulation	RB Size	RB Offset	Conducted Power [dBm]	MPR Allowed per 3GPP [dB]	MPR [dB]
Mid	1732.5	20175	20	QPSK	1	0	**23.64**	0	0
	1732.5	20175	20	QPSK	1	50	23.50	0	0
	1732.5	20175	20	QPSK	1	99	23.57	0	0
	1732.5	20175	20	QPSK	50	0	**22.51**	0-1	1
	1732.5	20175	20	QPSK	50	25	22.38	0-1	1
	1732.5	20175	20	QPSK	50	50	22.42	0-1	1
	1732.5	20175	20	QPSK	100	0	22.43	0-1	1
	1732.5	20175	20	16QAM	1	0	22.70	0-1	1
	1732.5	20175	20	16QAM	1	50	22.53	0-1	1
	1732.5	20175	20	16QAM	1	99	22.57	0-1	1
	1732.5	20175	20	16QAM	50	0	21.64	0-2	2
	1732.5	20175	20	16QAM	50	25	21.39	0-2	2
	1732.5	20175	20	16QAM	50	50	21.44	0-2	2
	1732.5	20175	20	16QAM	100	0	21.45	0-2	2

Note: LTE Band 4 (AWS) at 20 MHz bandwidth does not support three non-overlapping channels. Per KDB Publication 941225 D05v02, when a device supports overlapping channel assignment in a channel bandwidth configuration, the middle channel of the group of overlapping channels should be selected for testing.

© 2014 PCTEST Engineering Laboratory, Inc.

Table 9-10
LTE Band 4 (AWS) Conducted Powers - 15 MHz Bandwidth

	Frequency [MHz]	Channel	Bandwidth [MHz]	Modulation	RB Size	RB Offset	Conducted Power [dBm]	MPR Allowed per 3GPP [dB]	MPR [dB]
Low	1717.5	20025	15	QPSK	1	0	23.72	0	0
	1717.5	20025	15	QPSK	1	36	23.73	0	0
	1717.5	20025	15	QPSK	1	74	23.73	0	0
	1717.5	20025	15	QPSK	36	0	22.74	0-1	1
	1717.5	20025	15	QPSK	36	18	22.67	0-1	1
	1717.5	20025	15	QPSK	36	37	22.68	0-1	1
	1717.5	20025	15	QPSK	75	0	22.75	0-1	1
	1717.5	20025	15	16QAM	1	0	22.80	0-1	1
	1717.5	20025	15	16QAM	1	36	22.76	0-1	1
	1717.5	20025	15	16QAM	1	74	22.78	0-1	1
	1717.5	20025	15	16QAM	36	0	21.80	0-2	2
	1717.5	20025	15	16QAM	36	18	21.64	0-2	2
	1717.5	20025	15	16QAM	36	37	21.61	0-2	2
	1717.5	20025	15	16QAM	75	0	21.76	0-2	2
Mid	1732.5	20175	15	QPSK	1	0	23.71	0	0
	1732.5	20175	15	QPSK	1	36	23.74	0	0
	1732.5	20175	15	QPSK	1	74	23.48	0	0
	1732.5	20175	15	QPSK	36	0	22.90	0-1	1
	1732.5	20175	15	QPSK	36	18	22.78	0-1	1
	1732.5	20175	15	QPSK	36	37	22.61	0-1	1
	1732.5	20175	15	QPSK	75	0	22.74	0-1	1
	1732.5	20175	15	16QAM	1	0	22.88	0-1	1
	1732.5	20175	15	16QAM	1	36	22.94	0-1	1
	1732.5	20175	15	16QAM	1	74	22.82	0-1	1
	1732.5	20175	15	16QAM	36	0	21.78	0-2	2
	1732.5	20175	15	16QAM	36	18	21.76	0-2	2
	1732.5	20175	15	16QAM	36	37	21.68	0-2	2
	1732.5	20175	15	16QAM	75	0	21.69	0-2	2
High	1747.5	20325	15	QPSK	1	0	23.51	0	0
	1747.5	20325	15	QPSK	1	36	23.53	0	0
	1747.5	20325	15	QPSK	1	74	23.46	0	0
	1747.5	20325	15	QPSK	36	0	22.35	0-1	1
	1747.5	20325	15	QPSK	36	18	22.31	0-1	1
	1747.5	20325	15	QPSK	36	37	22.22	0-1	1
	1747.5	20325	15	QPSK	75	0	22.26	0-1	1
	1747.5	20325	15	16QAM	1	0	22.60	0-1	1
	1747.5	20325	15	16QAM	1	36	22.52	0-1	1
	1747.5	20325	15	16QAM	1	74	22.39	0-1	1
	1747.5	20325	15	16QAM	36	0	21.48	0-2	2
	1747.5	20325	15	16QAM	36	18	21.36	0-2	2
	1747.5	20325	15	16QAM	36	37	21.28	0-2	2
	1747.5	20325	15	16QAM	75	0	21.28	0-2	2

Table 9-11
LTE Band 4 (AWS) Conducted Powers - 10 MHz Bandwidth

	Frequency [MHz]	Channel	Bandwidth [MHz]	Modulation	RB Size	RB Offset	Conducted Power [dBm]	MPR Allowed per 3GPP [dB]	MPR [dB]
Low	1715	20000	10	QPSK	1	0	23.68	0	0
	1715	20000	10	QPSK	1	25	23.66	0	0
	1715	20000	10	QPSK	1	49	23.65	0	0
	1715	20000	10	QPSK	25	0	22.70	0-1	1
	1715	20000	10	QPSK	25	12	22.66	0-1	1
	1715	20000	10	QPSK	25	25	22.64	0-1	1
	1715	20000	10	QPSK	50	0	22.68	0-1	1
	1715	20000	10	16QAM	1	0	22.71	0-1	1
	1715	20000	10	16QAM	1	25	22.68	0-1	1
	1715	20000	10	16QAM	1	49	22.62	0-1	1
	1715	20000	10	16QAM	25	0	21.76	0-2	2
	1715	20000	10	16QAM	25	12	21.74	0-2	2
	1715	20000	10	16QAM	25	25	21.76	0-2	2
	1715	20000	10	16QAM	50	0	21.66	0-2	2
Mid	1732.5	20175	10	QPSK	1	0	23.73	0	0
	1732.5	20175	10	QPSK	1	25	23.65	0	0
	1732.5	20175	10	QPSK	1	49	23.63	0	0
	1732.5	20175	10	QPSK	25	0	22.71	0-1	1
	1732.5	20175	10	QPSK	25	12	22.71	0-1	1
	1732.5	20175	10	QPSK	25	25	22.60	0-1	1
	1732.5	20175	10	QPSK	50	0	22.73	0-1	1
	1732.5	20175	10	16QAM	1	0	22.98	0-1	1
	1732.5	20175	10	16QAM	1	25	22.96	0-1	1
	1732.5	20175	10	16QAM	1	49	22.89	0-1	1
	1732.5	20175	10	16QAM	25	0	21.85	0-2	2
	1732.5	20175	10	16QAM	25	12	21.80	0-2	2
	1732.5	20175	10	16QAM	25	25	21.71	0-2	2
	1732.5	20175	10	16QAM	50	0	21.74	0-2	2
High	1750	20350	10	QPSK	1	0	23.49	0	0
	1750	20350	10	QPSK	1	25	23.46	0	0
	1750	20350	10	QPSK	1	49	23.36	0	0
	1750	20350	10	QPSK	25	0	22.30	0-1	1
	1750	20350	10	QPSK	25	12	22.24	0-1	1
	1750	20350	10	QPSK	25	25	22.24	0-1	1
	1750	20350	10	QPSK	50	0	22.34	0-1	1
	1750	20350	10	16QAM	1	0	22.47	0-1	1
	1750	20350	10	16QAM	1	25	22.39	0-1	1
	1750	20350	10	16QAM	1	49	22.39	0-1	1
	1750	20350	10	16QAM	25	0	21.43	0-2	2
	1750	20350	10	16QAM	25	12	21.26	0-2	2
	1750	20350	10	16QAM	25	25	21.23	0-2	2
	1750	20350	10	16QAM	50	0	21.35	0-2	2

© 2014 PCTEST Engineering Laboratory, Inc.

Table 9-12
LTE Band 4 (AWS) Conducted Powers - 5 MHz Bandwidth

	Frequency [MHz]	Channel	Bandwidth [MHz]	Modulation	RB Size	RB Offset	Conducted Power [dBm]	MPR Allowed per 3GPP [dB]	MPR [dB]
Low	1712.5	19975	5	QPSK	1	0	23.69	0	0
	1712.5	19975	5	QPSK	1	12	23.59	0	0
	1712.5	19975	5	QPSK	1	24	23.71	0	0
	1712.5	19975	5	QPSK	12	0	22.73	0-1	1
	1712.5	19975	5	QPSK	12	6	22.58	0-1	1
	1712.5	19975	5	QPSK	12	13	22.59	0-1	1
	1712.5	19975	5	QPSK	25	0	22.64	0-1	1
	1712.5	19975	5	16-QAM	1	0	22.81	0-1	1
	1712.5	19975	5	16-QAM	1	12	22.69	0-1	1
	1712.5	19975	5	16-QAM	1	24	22.86	0-1	1
	1712.5	19975	5	16-QAM	12	0	21.66	0-2	2
	1712.5	19975	5	16-QAM	12	6	21.60	0-2	2
	1712.5	19975	5	16-QAM	12	13	21.56	0-2	2
	1712.5	19975	5	16-QAM	25	0	21.64	0-2	2
Mid	1732.5	20175	5	QPSK	1	0	23.82	0	0
	1732.5	20175	5	QPSK	1	12	23.69	0	0
	1732.5	20175	5	QPSK	1	24	23.72	0	0
	1732.5	20175	5	QPSK	12	0	22.76	0-1	1
	1732.5	20175	5	QPSK	12	6	22.76	0-1	1
	1732.5	20175	5	QPSK	12	13	22.70	0-1	1
	1732.5	20175	5	QPSK	25	0	22.72	0-1	1
	1732.5	20175	5	16-QAM	1	0	22.80	0-1	1
	1732.5	20175	5	16-QAM	1	12	22.66	0-1	1
	1732.5	20175	5	16-QAM	1	24	22.73	0-1	1
	1732.5	20175	5	16-QAM	12	0	21.86	0-2	2
	1732.5	20175	5	16-QAM	12	6	21.82	0-2	2
	1732.5	20175	5	16-QAM	12	13	21.78	0-2	2
	1732.5	20175	5	16-QAM	25	0	21.74	0-2	2
High	1752.5	20375	5	QPSK	1	0	23.39	0	0
	1752.5	20375	5	QPSK	1	12	23.36	0	0
	1752.5	20375	5	QPSK	1	24	23.37	0	0
	1752.5	20375	5	QPSK	12	0	22.34	0-1	1
	1752.5	20375	5	QPSK	12	6	22.30	0-1	1
	1752.5	20375	5	QPSK	12	13	22.27	0-1	1
	1752.5	20375	5	QPSK	25	0	22.22	0-1	1
	1752.5	20375	5	16-QAM	1	0	22.36	0-1	1
	1752.5	20375	5	16-QAM	1	12	22.32	0-1	1
	1752.5	20375	5	16-QAM	1	24	22.35	0-1	1
	1752.5	20375	5	16-QAM	12	0	21.41	0-2	2
	1752.5	20375	5	16-QAM	12	6	21.33	0-2	2
	1752.5	20375	5	16-QAM	12	13	21.35	0-2	2
	1752.5	20375	5	16-QAM	25	0	21.32	0-2	2

Table 9-13
LTE Band 4 (AWS) Conducted Powers - 3 MHz Bandwidth

	Frequency [MHz]	Channel	Bandwidth [MHz]	Modulation	RB Size	RB Offset	Conducted Power [dBm]	MPR Allowed per 3GPP [dB]	MPR [dB]
Low	1711.5	19965	3	QPSK	1	0	23.35	0	0
	1711.5	19965	3	QPSK	1	7	23.27	0	0
	1711.5	19965	3	QPSK	1	14	23.28	0	0
	1711.5	19965	3	QPSK	8	0	22.25	0-1	1
	1711.5	19965	3	QPSK	8	4	22.19	0-1	1
	1711.5	19965	3	QPSK	8	7	22.18	0-1	1
	1711.5	19965	3	QPSK	15	0	22.13	0-1	1
	1711.5	19965	3	16-QAM	1	0	22.60	0-1	1
	1711.5	19965	3	16-QAM	1	7	22.57	0-1	1
	1711.5	19965	3	16-QAM	1	14	22.55	0-1	1
	1711.5	19965	3	16-QAM	8	0	21.19	0-2	2
	1711.5	19965	3	16-QAM	8	4	21.13	0-2	2
	1711.5	19965	3	16-QAM	8	7	21.18	0-2	2
	1711.5	19965	3	16-QAM	15	0	21.26	0-2	2
Mid	1732.5	20175	3	QPSK	1	0	23.31	0	0
	1732.5	20175	3	QPSK	1	7	23.20	0	0
	1732.5	20175	3	QPSK	1	14	23.19	0	0
	1732.5	20175	3	QPSK	8	0	22.28	0-1	1
	1732.5	20175	3	QPSK	8	4	22.14	0-1	1
	1732.5	20175	3	QPSK	8	7	22.17	0-1	1
	1732.5	20175	3	QPSK	15	0	22.13	0-1	1
	1732.5	20175	3	16-QAM	1	0	22.54	0-1	1
	1732.5	20175	3	16-QAM	1	7	22.47	0-1	1
	1732.5	20175	3	16-QAM	1	14	22.47	0-1	1
	1732.5	20175	3	16-QAM	8	0	21.25	0-2	2
	1732.5	20175	3	16-QAM	8	4	21.13	0-2	2
	1732.5	20175	3	16-QAM	8	7	21.15	0-2	2
	1732.5	20175	3	16-QAM	15	0	21.23	0-2	2
High	1753.5	20385	3	QPSK	1	0	23.43	0	0
	1753.5	20385	3	QPSK	1	7	23.30	0	0
	1753.5	20385	3	QPSK	1	14	23.32	0	0
	1753.5	20385	3	QPSK	8	0	22.24	0-1	1
	1753.5	20385	3	QPSK	8	4	22.20	0-1	1
	1753.5	20385	3	QPSK	8	7	22.27	0-1	1
	1753.5	20385	3	QPSK	15	0	22.23	0-1	1
	1753.5	20385	3	16-QAM	1	0	22.41	0-1	1
	1753.5	20385	3	16-QAM	1	7	22.37	0-1	1
	1753.5	20385	3	16-QAM	1	14	22.38	0-1	1
	1753.5	20385	3	16-QAM	8	0	21.28	0-2	2
	1753.5	20385	3	16-QAM	8	4	21.19	0-2	2
	1753.5	20385	3	16-QAM	8	7	21.17	0-2	2
	1753.5	20385	3	16-QAM	15	0	21.32	0-2	2

© 2014 PCTEST Engineering Laboratory, Inc.

Table 9-14
LTE Band 4 (AWS) Conducted Powers – 1.4 MHz Bandwidth

	Frequency [MHz]	Channel	Bandwidth [MHz]	Modulation	RB Size	RB Offset	Conducted Power [dBm]	MPR Allowed per 3GPP [dB]	MPR [dB]
Low	1710.7	19957	1.4	QPSK	1	0	23.43	0	0
	1710.7	19957	1.4	QPSK	1	2	23.48	0	0
	1710.7	19957	1.4	QPSK	1	5	23.47	0	0
	1710.7	19957	1.4	QPSK	3	0	23.28	0	0
	1710.7	19957	1.4	QPSK	3	2	23.20	0	0
	1710.7	19957	1.4	QPSK	3	3	23.22	0	0
	1710.7	19957	1.4	QPSK	6	0	22.22	0-1	1
	1710.7	19957	1.4	16-QAM	1	0	22.39	0-1	1
	1710.7	19957	1.4	16-QAM	1	2	22.27	0-1	1
	1710.7	19957	1.4	16-QAM	1	5	22.29	0-1	1
	1710.7	19957	1.4	16-QAM	3	0	22.23	0-1	1
	1710.7	19957	1.4	16-QAM	3	2	22.19	0-1	1
	1710.7	19957	1.4	16-QAM	3	3	22.17	0-1	1
	1710.7	19957	1.4	16-QAM	6	0	21.30	0-2	2
Mid	1732.5	20175	1.4	QPSK	1	0	23.53	0	0
	1732.5	20175	1.4	QPSK	1	2	23.49	0	0
	1732.5	20175	1.4	QPSK	1	5	23.45	0	0
	1732.5	20175	1.4	QPSK	3	0	23.38	0	0
	1732.5	20175	1.4	QPSK	3	2	23.27	0	0
	1732.5	20175	1.4	QPSK	3	3	23.29	0	0
	1732.5	20175	1.4	QPSK	6	0	22.18	0-1	1
	1732.5	20175	1.4	16-QAM	1	0	22.12	0-1	1
	1732.5	20175	1.4	16-QAM	1	2	22.12	0-1	1
	1732.5	20175	1.4	16-QAM	1	5	22.08	0-1	1
	1732.5	20175	1.4	16-QAM	3	0	22.21	0-1	1
	1732.5	20175	1.4	16-QAM	3	2	22.16	0-1	1
	1732.5	20175	1.4	16-QAM	3	3	22.15	0-1	1
	1732.5	20175	1.4	16-QAM	6	0	21.35	0-2	2
High	1754.3	20393	1.4	QPSK	1	0	23.39	0	0
	1754.3	20393	1.4	QPSK	1	2	23.40	0	0
	1754.3	20393	1.4	QPSK	1	5	23.35	0	0
	1754.3	20393	1.4	QPSK	3	0	23.41	0	0
	1754.3	20393	1.4	QPSK	3	2	23.33	0	0
	1754.3	20393	1.4	QPSK	3	3	23.34	0	0
	1754.3	20393	1.4	QPSK	6	0	22.26	0-1	1
	1754.3	20393	1.4	16-QAM	1	0	22.41	0-1	1
	1754.3	20393	1.4	16-QAM	1	2	22.43	0-1	1
	1754.3	20393	1.4	16-QAM	1	5	22.33	0-1	1
	1754.3	20393	1.4	16-QAM	3	0	22.26	0-1	1
	1754.3	20393	1.4	16-QAM	3	2	22.27	0-1	1
	1754.3	20393	1.4	16-QAM	3	3	22.25	0-1	1
	1754.3	20393	1.4	16-QAM	6	0	21.38	0-2	2

9.2.4 LTE Band 2 (PCS)

Table 9-15
LTE Band 2 (PCS) Conducted Powers - 20 MHz Bandwidth

	Frequency [MHz]	Channel	Bandwidth [MHz]	Modulation	RB Size	RB Offset	Conducted Power [dBm]	MPR Allowed per 3GPP [dB]	MPR [dB]
Low	1860	18700	20	QPSK	1	0	23.35	0	0
	1860	18700	20	QPSK	1	50	23.14	0	0
	1860	18700	20	QPSK	1	99	**23.39**	0	0
	1860	18700	20	QPSK	50	0	**22.50**	0-1	1
	1860	18700	20	QPSK	50	25	22.31	0-1	1
	1860	18700	20	QPSK	50	50	22.33	0-1	1
	1860	18700	20	QPSK	100	0	22.48	0-1	1
	1860	18700	20	16QAM	1	0	22.49	0-1	1
	1860	18700	20	16QAM	1	50	22.24	0-1	1
	1860	18700	20	16QAM	1	99	22.50	0-1	1
	1860	18700	20	16QAM	50	0	21.50	0-2	2
	1860	18700	20	16QAM	50	25	21.41	0-2	2
	1860	18700	20	16QAM	50	50	21.45	0-2	2
	1860	18700	20	16QAM	100	0	21.49	0-2	2
Mid	1880.0	18900	20	QPSK	1	0	23.14	0	0
	1880.0	18900	20	QPSK	1	50	23.10	0	0
	1880.0	18900	20	QPSK	1	99	23.22	0	0
	1880.0	18900	20	QPSK	50	0	22.07	0-1	1
	1880.0	18900	20	QPSK	50	25	22.19	0-1	1
	1880.0	18900	20	QPSK	50	50	22.02	0-1	1
	1880.0	18900	20	QPSK	100	0	22.07	0-1	1
	1880.0	18900	20	16QAM	1	0	22.22	0-1	1
	1880.0	18900	20	16QAM	1	50	22.10	0-1	1
	1880.0	18900	20	16QAM	1	99	22.26	0-1	1
	1880.0	18900	20	16QAM	50	0	21.14	0-2	2
	1880.0	18900	20	16QAM	50	25	21.29	0-2	2
	1880.0	18900	20	16QAM	50	50	21.06	0-2	2
	1880.0	18900	20	16QAM	100	0	21.05	0-2	2
High	1900	19100	20	QPSK	1	0	23.35	0	0
	1900	19100	20	QPSK	1	50	23.09	0	0
	1900	19100	20	QPSK	1	99	23.29	0	0
	1900	19100	20	QPSK	50	0	22.49	0-1	1
	1900	19100	20	QPSK	50	25	22.41	0-1	1
	1900	19100	20	QPSK	50	50	22.32	0-1	1
	1900	19100	20	QPSK	100	0	22.42	0-1	1
	1900	19100	20	16QAM	1	0	22.50	0-1	1
	1900	19100	20	16QAM	1	50	22.42	0-1	1
	1900	19100	20	16QAM	1	99	22.47	0-1	1
	1900	19100	20	16QAM	50	0	21.49	0-2	2
	1900	19100	20	16QAM	50	25	21.39	0-2	2
	1900	19100	20	16QAM	50	50	21.34	0-2	2
	1900	19100	20	16QAM	100	0	21.48	0-2	2

© 2014 PCTEST Engineering Laboratory, Inc.

Table 9-16
LTE Band 2 (PCS) Conducted Powers - 15 MHz Bandwidth

	Frequency [MHz]	Channel	Bandwidth [MHz]	Modulation	RB Size	RB Offset	Conducted Power [dBm]	MPR Allowed per 3GPP [dB]	MPR [dB]
Low	1857.5	18675	15	QPSK	1	0	23.24	0	0
	1857.5	18675	15	QPSK	1	36	23.50	0	0
	1857.5	18675	15	QPSK	1	74	23.33	0	0
	1857.5	18675	15	QPSK	36	0	22.50	0-1	1
	1857.5	18675	15	QPSK	36	18	22.49	0-1	1
	1857.5	18675	15	QPSK	36	37	22.23	0-1	1
	1857.5	18675	15	QPSK	75	0	22.48	0-1	1
	1857.5	18675	15	16QAM	1	0	22.50	0-1	1
	1857.5	18675	15	16QAM	1	36	22.39	0-1	1
	1857.5	18675	15	16QAM	1	74	22.25	0-1	1
	1857.5	18675	15	16QAM	36	0	21.50	0-2	2
	1857.5	18675	15	16QAM	36	18	21.48	0-2	2
	1857.5	18675	15	16QAM	36	37	21.21	0-2	2
	1857.5	18675	15	16QAM	75	0	21.48	0-2	2
Mid	1880.0	18900	15	QPSK	1	0	23.21	0	0
	1880.0	18900	15	QPSK	1	36	23.29	0	0
	1880.0	18900	15	QPSK	1	74	22.85	0	0
	1880.0	18900	15	QPSK	36	0	22.01	0-1	1
	1880.0	18900	15	QPSK	36	18	22.17	0-1	1
	1880.0	18900	15	QPSK	36	37	21.99	0-1	1
	1880.0	18900	15	QPSK	75	0	21.94	0-1	1
	1880.0	18900	15	16QAM	1	0	22.04	0-1	1
	1880.0	18900	15	16QAM	1	36	22.22	0-1	1
	1880.0	18900	15	16QAM	1	74	21.84	0-1	1
	1880.0	18900	15	16QAM	36	0	21.04	0-2	2
	1880.0	18900	15	16QAM	36	18	21.21	0-2	2
	1880.0	18900	15	16QAM	36	37	21.01	0-2	2
	1880.0	18900	15	16QAM	75	0	20.99	0-2	2
High	1902.5	19125	15	QPSK	1	0	23.50	0	0
	1902.5	19125	15	QPSK	1	36	23.35	0	0
	1902.5	19125	15	QPSK	1	74	23.44	0	0
	1902.5	19125	15	QPSK	36	0	22.33	0-1	1
	1902.5	19125	15	QPSK	36	18	22.29	0-1	1
	1902.5	19125	15	QPSK	36	37	22.38	0-1	1
	1902.5	19125	15	QPSK	75	0	22.35	0-1	1
	1902.5	19125	15	16QAM	1	0	22.40	0-1	1
	1902.5	19125	15	16QAM	1	36	22.25	0-1	1
	1902.5	19125	15	16QAM	1	74	21.96	0-1	1
	1902.5	19125	15	16QAM	36	0	21.36	0-2	2
	1902.5	19125	15	16QAM	36	18	21.32	0-2	2
	1902.5	19125	15	16QAM	36	37	21.44	0-2	2
	1902.5	19125	15	16QAM	75	0	21.45	0-2	2

Table 9-17
LTE Band 2 (PCS) Conducted Powers - 10 MHz Bandwidth

	Frequency [MHz]	Channel	Bandwidth [MHz]	Modulation	RB Size	RB Offset	Conducted Power [dBm]	MPR Allowed per 3GPP [dB]	MPR [dB]
Low	1855	18650	10	QPSK	1	0	23.33	0	0
	1855	18650	10	QPSK	1	25	23.49	0	0
	1855	18650	10	QPSK	1	49	23.31	0	0
	1855	18650	10	QPSK	25	0	22.41	0-1	1
	1855	18650	10	QPSK	25	12	22.50	0-1	1
	1855	18650	10	QPSK	25	25	22.48	0-1	1
	1855	18650	10	QPSK	50	0	22.31	0-1	1
	1855	18650	10	16QAM	1	0	22.49	0-1	1
	1855	18650	10	16QAM	1	25	22.46	0-1	1
	1855	18650	10	16QAM	1	49	22.10	0-1	1
	1855	18650	10	16QAM	25	0	21.44	0-2	2
	1855	18650	10	16QAM	25	12	21.50	0-2	2
	1855	18650	10	16QAM	25	25	21.48	0-2	2
	1855	18650	10	16QAM	50	0	21.49	0-2	2
Mid	1880.0	18900	10	QPSK	1	0	23.02	0	0
	1880.0	18900	10	QPSK	1	25	23.29	0	0
	1880.0	18900	10	QPSK	1	49	22.81	0	0
	1880.0	18900	10	QPSK	25	0	22.04	0-1	1
	1880.0	18900	10	QPSK	25	12	22.27	0-1	1
	1880.0	18900	10	QPSK	25	25	22.22	0-1	1
	1880.0	18900	10	QPSK	50	0	22.21	0-1	1
	1880.0	18900	10	16QAM	1	0	21.92	0-1	1
	1880.0	18900	10	16QAM	1	25	22.17	0-1	1
	1880.0	18900	10	16QAM	1	49	21.68	0-1	1
	1880.0	18900	10	16QAM	25	0	21.03	0-2	2
	1880.0	18900	10	16QAM	25	12	21.33	0-2	2
	1880.0	18900	10	16QAM	25	25	21.34	0-2	2
	1880.0	18900	10	16QAM	50	0	21.28	0-2	2
High	1905	19150	10	QPSK	1	0	23.23	0	0
	1905	19150	10	QPSK	1	25	23.33	0	0
	1905	19150	10	QPSK	1	49	23.43	0	0
	1905	19150	10	QPSK	25	0	22.27	0-1	1
	1905	19150	10	QPSK	25	12	22.39	0-1	1
	1905	19150	10	QPSK	25	25	22.42	0-1	1
	1905	19150	10	QPSK	50	0	22.38	0-1	1
	1905	19150	10	16QAM	1	0	22.24	0-1	1
	1905	19150	10	16QAM	1	25	22.21	0-1	1
	1905	19150	10	16QAM	1	49	22.05	0-1	1
	1905	19150	10	16QAM	25	0	21.33	0-2	2
	1905	19150	10	16QAM	25	12	21.45	0-2	2
	1905	19150	10	16QAM	25	25	21.47	0-2	2
	1905	19150	10	16QAM	50	0	21.39	0-2	2

© 2014 PCTEST Engineering Laboratory, Inc.

Table 9-18
LTE Band 2 (PCS) Conducted Powers - 5 MHz Bandwidth

	Frequency [MHz]	Channel	Bandwidth [MHz]	Modulation	RB Size	RB Offset	Conducted Power [dBm]	MPR Allowed per 3GPP [dB]	MPR [dB]
Low	1852.5	18625	5	QPSK	1	0	23.07	0	0
	1852.5	18625	5	QPSK	1	12	23.22	0	0
	1852.5	18625	5	QPSK	1	24	23.50	0	0
	1852.5	18625	5	QPSK	12	0	22.28	0-1	1
	1852.5	18625	5	QPSK	12	6	22.32	0-1	1
	1852.5	18625	5	QPSK	12	13	22.49	0-1	1
	1852.5	18625	5	QPSK	25	0	22.48	0-1	1
	1852.5	18625	5	16-QAM	1	0	22.49	0-1	1
	1852.5	18625	5	16-QAM	1	12	22.50	0-1	1
	1852.5	18625	5	16-QAM	1	24	22.49	0-1	1
	1852.5	18625	5	16-QAM	12	0	21.43	0-2	2
	1852.5	18625	5	16-QAM	12	6	21.46	0-2	2
	1852.5	18625	5	16-QAM	12	13	21.50	0-2	2
	1852.5	18625	5	16-QAM	25	0	21.48	0-2	2
Mid	1880.0	18900	5	QPSK	1	0	23.17	0	0
	1880.0	18900	5	QPSK	1	12	23.29	0	0
	1880.0	18900	5	QPSK	1	24	23.34	0	0
	1880.0	18900	5	QPSK	12	0	22.13	0-1	1
	1880.0	18900	5	QPSK	12	6	22.24	0-1	1
	1880.0	18900	5	QPSK	12	13	22.33	0-1	1
	1880.0	18900	5	QPSK	25	0	22.26	0-1	1
	1880.0	18900	5	16-QAM	1	0	21.92	0-1	1
	1880.0	18900	5	16-QAM	1	12	22.14	0-1	1
	1880.0	18900	5	16-QAM	1	24	22.16	0-1	1
	1880.0	18900	5	16-QAM	12	0	21.23	0-2	2
	1880.0	18900	5	16-QAM	12	6	21.29	0-2	2
	1880.0	18900	5	16-QAM	12	13	21.32	0-2	2
	1880.0	18900	5	16-QAM	25	0	21.35	0-2	2
High	1907.5	19175	5	QPSK	1	0	23.34	0	0
	1907.5	19175	5	QPSK	1	12	23.46	0	0
	1907.5	19175	5	QPSK	1	24	23.45	0	0
	1907.5	19175	5	QPSK	12	0	22.36	0-1	1
	1907.5	19175	5	QPSK	12	6	22.38	0-1	1
	1907.5	19175	5	QPSK	12	13	22.37	0-1	1
	1907.5	19175	5	QPSK	25	0	22.39	0-1	1
	1907.5	19175	5	16-QAM	1	0	22.26	0-1	1
	1907.5	19175	5	16-QAM	1	12	22.38	0-1	1
	1907.5	19175	5	16-QAM	1	24	22.19	0-1	1
	1907.5	19175	5	16-QAM	12	0	21.20	0-2	2
	1907.5	19175	5	16-QAM	12	6	21.37	0-2	2
	1907.5	19175	5	16-QAM	12	13	21.39	0-2	2
	1907.5	19175	5	16-QAM	25	0	21.44	0-2	2

Table 9-19
LTE Band 2 (PCS) Conducted Powers - 3 MHz Bandwidth

	Frequency [MHz]	Channel	Bandwidth [MHz]	Modulation	RB Size	RB Offset	Conducted Power [dBm]	MPR Allowed per 3GPP [dB]	MPR [dB]
Low	1851.5	18615	3	QPSK	1	0	22.68	0	0
	1851.5	18615	3	QPSK	1	7	22.75	0	0
	1851.5	18615	3	QPSK	1	14	22.78	0	0
	1851.5	18615	3	QPSK	8	0	21.99	0-1	1
	1851.5	18615	3	QPSK	8	4	22.02	0-1	1
	1851.5	18615	3	QPSK	8	7	22.03	0-1	1
	1851.5	18615	3	QPSK	15	0	22.02	0-1	1
	1851.5	18615	3	16-QAM	1	0	22.10	0-1	1
	1851.5	18615	3	16-QAM	1	7	22.14	0-1	1
	1851.5	18615	3	16-QAM	1	14	22.13	0-1	1
	1851.5	18615	3	16-QAM	8	0	20.83	0-2	2
	1851.5	18615	3	16-QAM	8	4	20.96	0-2	2
	1851.5	18615	3	16-QAM	8	7	20.80	0-2	2
	1851.5	18615	3	16-QAM	15	0	21.02	0-2	2
Mid	1880.0	18900	3	QPSK	1	0	22.95	0	0
	1880.0	18900	3	QPSK	1	7	23.03	0	0
	1880.0	18900	3	QPSK	1	14	23.02	0	0
	1880.0	18900	3	QPSK	8	0	22.09	0-1	1
	1880.0	18900	3	QPSK	8	4	22.20	0-1	1
	1880.0	18900	3	QPSK	8	7	22.18	0-1	1
	1880.0	18900	3	QPSK	15	0	22.16	0-1	1
	1880.0	18900	3	16-QAM	1	0	22.32	0-1	1
	1880.0	18900	3	16-QAM	1	7	22.46	0-1	1
	1880.0	18900	3	16-QAM	1	14	22.40	0-1	1
	1880.0	18900	3	16-QAM	8	0	21.04	0-2	2
	1880.0	18900	3	16-QAM	8	4	21.14	0-2	2
	1880.0	18900	3	16-QAM	8	7	21.13	0-2	2
	1880.0	18900	3	16-QAM	15	0	21.23	0-2	2
High	1908.5	19185	3	QPSK	1	0	23.25	0	0
	1908.5	19185	3	QPSK	1	7	23.18	0	0
	1908.5	19185	3	QPSK	1	14	23.22	0	0
	1908.5	19185	3	QPSK	8	0	22.19	0-1	1
	1908.5	19185	3	QPSK	8	4	22.30	0-1	1
	1908.5	19185	3	QPSK	8	7	22.35	0-1	1
	1908.5	19185	3	QPSK	15	0	22.24	0-1	1
	1908.5	19185	3	16-QAM	1	0	22.40	0-1	1
	1908.5	19185	3	16-QAM	1	7	22.42	0-1	1
	1908.5	19185	3	16-QAM	1	14	22.43	0-1	1
	1908.5	19185	3	16-QAM	8	0	21.21	0-2	2
	1908.5	19185	3	16-QAM	8	4	21.25	0-2	2
	1908.5	19185	3	16-QAM	8	7	21.14	0-2	2
	1908.5	19185	3	16-QAM	15	0	21.30	0-2	2

© 2014 PCTEST Engineering Laboratory, Inc.

Table 9-20
LTE Band 2 (PCS) Conducted Powers – 1.4 MHz Bandwidth

	Frequency [MHz]	Channel	Bandwidth [MHz]	Modulation	RB Size	RB Offset	Conducted Power [dBm]	MPR Allowed per 3GPP [dB]	MPR [dB]
Low	1850.7	18607	1.4	QPSK	1	0	23.02	0	0
	1850.7	18607	1.4	QPSK	1	2	23.08	0	0
	1850.7	18607	1.4	QPSK	1	5	23.11	0	0
	1850.7	18607	1.4	QPSK	3	0	22.97	0	0
	1850.7	18607	1.4	QPSK	3	2	22.98	0	0
	1850.7	18607	1.4	QPSK	3	3	23.00	0	0
	1850.7	18607	1.4	QPSK	6	0	22.08	0-1	1
	1850.7	18607	1.4	16-QAM	1	0	21.83	0-1	1
	1850.7	18607	1.4	16-QAM	1	2	21.88	0-1	1
	1850.7	18607	1.4	16-QAM	1	5	21.89	0-1	1
	1850.7	18607	1.4	16-QAM	3	0	22.01	0-1	1
	1850.7	18607	1.4	16-QAM	3	2	22.01	0-1	1
	1850.7	18607	1.4	16-QAM	3	3	22.07	0-1	1
	1850.7	18607	1.4	16-QAM	6	0	21.16	0-2	2
Mid	1880.0	18900	1.4	QPSK	1	0	23.29	0	0
	1880.0	18900	1.4	QPSK	1	2	23.24	0	0
	1880.0	18900	1.4	QPSK	1	5	23.31	0	0
	1880.0	18900	1.4	QPSK	3	0	23.11	0	0
	1880.0	18900	1.4	QPSK	3	2	23.12	0	0
	1880.0	18900	1.4	QPSK	3	3	23.12	0	0
	1880.0	18900	1.4	QPSK	6	0	22.24	0-1	1
	1880.0	18900	1.4	16-QAM	1	0	22.03	0-1	1
	1880.0	18900	1.4	16-QAM	1	2	21.97	0-1	1
	1880.0	18900	1.4	16-QAM	1	5	22.01	0-1	1
	1880.0	18900	1.4	16-QAM	3	0	22.07	0-1	1
	1880.0	18900	1.4	16-QAM	3	2	22.12	0-1	1
	1880.0	18900	1.4	16-QAM	3	3	22.18	0-1	1
	1880.0	18900	1.4	16-QAM	6	0	21.34	0-2	2
High	1909.3	19193	1.4	QPSK	1	0	23.43	0	0
	1909.3	19193	1.4	QPSK	1	2	23.39	0	0
	1909.3	19193	1.4	QPSK	1	5	23.40	0	0
	1909.3	19193	1.4	QPSK	3	0	23.30	0	0
	1909.3	19193	1.4	QPSK	3	2	23.33	0	0
	1909.3	19193	1.4	QPSK	3	3	23.37	0	0
	1909.3	19193	1.4	QPSK	6	0	22.30	0-1	1
	1909.3	19193	1.4	16-QAM	1	0	22.15	0-1	1
	1909.3	19193	1.4	16-QAM	1	2	22.12	0-1	1
	1909.3	19193	1.4	16-QAM	1	5	22.10	0-1	1
	1909.3	19193	1.4	16-QAM	3	0	22.24	0-1	1
	1909.3	19193	1.4	16-QAM	3	2	22.27	0-1	1
	1909.3	19193	1.4	16-QAM	3	3	22.28	0-1	1
	1909.3	19193	1.4	16-QAM	6	0	21.43	0-2	2

9.3 WLAN Conducted Powers

Table 9-21
SISO IEEE 802.11b Average RF Power- Antenna 1

Mode	Freq [MHz]	Channel	802.11b Conducted Power [dBm]			
			Data Rate [Mbps]			
			1	2	5.5	11
802.11b	2412	1*	15.28	15.38	14.36	15.03
802.11b	2437	6*	15.10	15.15	14.85	15.36
802.11b	2462	11*	**15.30**	15.26	15.36	15.18

Table 9-22
SISO IEEE 802.11b Average RF Power- Antenna 2

Mode	Freq [MHz]	Channel	802.11b Conducted Power [dBm]			
			Data Rate [Mbps]			
			1	2	5.5	11
802.11b	2412	1*	14.44	14.81	14.79	14.94
802.11b	2437	6*	14.30	14.58	14.63	14.58
802.11b	2462	11*	**14.80**	14.84	14.86	14.78

© 2014 PCTEST Engineering Laboratory, Inc.

Table 9-23
SISO IEEE 802.11g Average RF Power- Antenna 1

Mode	Freq [MHz]	Channel	802.11g Conducted Power [dBm]							
			Data Rate [Mbps]							
			6	9	12	18	24	36	48	54
802.11g	2412	1	13.53	13.45	13.52	13.57	14.12	13.74	13.66	14.02
802.11g	2437	6	13.22	13.17	13.16	13.26	13.84	13.41	13.32	13.71
802.11g	2462	11	13.45	13.37	13.47	13.56	14.03	13.62	13.56	13.98

Table 9-24
SISO IEEE 802.11g Average RF Power- Antenna 2

Mode	Freq [MHz]	Channel	802.11g Conducted Power [dBm]							
			Data Rate [Mbps]							
			6	9	12	18	24	36	48	54
802.11g	2412	1	13.18	12.95	13.05	13.16	13.66	13.25	13.35	13.60
802.11g	2437	6	12.97	12.90	13.00	13.09	13.47	13.24	13.17	13.50
802.11g	2462	11	13.38	13.32	13.36	13.32	13.83	13.46	13.58	13.92

Table 9-25
SISO IEEE 802.11n Average RF Power- Antenna 1

Mode	Freq [MHz]	Channel	802.11n (2.4GHz) Conducted Power [dBm]							
			Data Rate [Mbps]							
			6.5	13	19.5	26	39	52	58.5	65
802.11n	2412	1	12.20	12.25	12.20	12.24	12.45	12.47	12.30	12.45
802.11n	2437	6	12.27	12.27	12.26	12.31	12.46	12.47	12.36	12.41
802.11n	2462	11	12.34	12.29	12.43	12.37	12.49	12.41	12.49	12.47

Table 9-26
SISO IEEE 802.11n Average RF Power- Antenna 2

Mode	Freq [MHz]	Channel	802.11n (2.4GHz) Conducted Power [dBm]							
			Data Rate [Mbps]							
			6.5	13	19.5	26	39	52	58.5	65
802.11n	2412	1	12.26	12.28	12.30	12.45	12.37	12.44	12.54	12.47
802.11n	2437	6	12.09	12.20	12.16	12.42	12.24	12.53	12.45	12.57
802.11n	2462	11	12.32	12.36	12.41	12.56	12.69	12.66	12.72	12.63

Table 9-27
MIMO IEEE 802.11n Average RF Power

802.11n (2.4 GHz) Conducted Power [dBm]			
Mode	Freq [MHz]	Channel	Data Rate [Mbps]
			13
802.11n	2412	1	15.24
802.11n	2437	6	15.19
802.11n	2462	11	**15.34**

© 2014 PCTEST Engineering Laboratory, Inc.

Table 9-28
SISO IEEE 802.11a Average RF Power-Antenna 1

Mode	Freq [MHz]	Channel	802.11a Conducted Power [dBm]							
			Data Rate [Mbps]							
			6	9	12	18	24	36	48	54
802.11a	5180	36*	11.50	11.75	11.63	11.61	11.70	11.67	11.65	11.82
802.11a	5200	40	11.50	11.67	11.60	11.53	11.69	11.67	11.63	11.80
802.11a	5220	44	11.51	11.72	11.52	11.52	11.76	11.75	11.64	11.77
802.11a	5240	48*	**11.59**	11.69	11.58	11.76	11.75	11.68	11.75	11.80
802.11a	5260	52*	11.71	11.92	11.81	11.83	11.92	12.03	11.84	12.05
802.11a	5280	56	11.87	11.86	11.85	11.84	11.97	12.07	12.03	12.13
802.11a	5300	60	11.91	11.88	11.80	11.86	11.98	11.97	11.96	12.11
802.11a	5320	64*	**11.94**	12.03	11.87	11.76	12.07	12.00	12.02	12.15
802.11a	5500	100	11.86	11.91	11.85	11.88	12.03	12.02	12.10	12.10
802.11a	5520	104*	11.92	11.96	11.90	11.92	12.14	12.02	12.11	12.07
802.11a	5540	108	11.89	12.11	11.99	11.88	12.10	12.03	12.17	12.14
802.11a	5560	112	11.99	12.06	12.02	11.86	12.18	12.07	12.20	12.11
802.11a	5580	116*	**12.00**	12.09	11.98	11.98	12.23	12.08	12.23	12.18
802.11a	5600	120	N/A	N/A	N/A	N/A	N/A	N/A	N/A	N/A
802.11a	5620	124	N/A	N/A	N/A	N/A	N/A	N/A	N/A	N/A
802.11a	5640	128	N/A	N/A	N/A	N/A	N/A	N/A	N/A	N/A
802.11a	5660	132	11.91	12.02	12.03	11.98	12.07	12.09	12.16	12.23
802.11a	5680	136*	11.98	12.16	11.98	11.91	12.12	12.04	12.22	12.16
802.11a	5700	140	11.82	12.03	11.98	11.96	12.12	12.05	11.94	12.10
802.11a	5745	149*	11.82	11.81	11.70	11.75	11.94	11.82	11.95	11.83
802.11a	5765	153	11.81	11.77	11.71	11.64	11.87	11.82	12.01	11.90
802.11a	5785	157*	11.85	11.68	11.54	11.59	11.79	11.67	12.05	11.78
802.11a	5805	161	11.73	11.62	11.63	11.56	11.75	11.62	12.08	11.70
802.11a	5825	165*	**11.88**	11.49	11.50	11.49	11.74	11.67	12.03	11.68

Per FCC KDB Publication 443999 and RSS-210 A9.2(3), transmission on channels which overlap the 5600-5650 MHz is prohibited as a client. This device does not transmit any beacons or initiate any transmissions in 5.3 and 5.5 GHz Band.

(*) – indicates default channels per KDB Publication 248227 D01v01r02. When the adjacent channels are higher in power then the default channels, these “required channels” are considered for SAR testing instead of the default channels.

© 2014 PCTEST Engineering Laboratory, Inc.

Table 9-29
SISO IEEE 802.11a Average RF Power-Antenna 2

Mode	Freq [MHz]	Channel	802.11a Conducted Power [dBm]							
			Data Rate [Mbps]							
			6	9	12	18	24	36	48	54
802.11a	5180	36*	11.75	11.79	11.83	11.87	11.91	12.02	12.01	12.10
802.11a	5200	40	**11.92**	11.75	11.71	11.84	12.11	12.13	12.12	12.12
802.11a	5220	44	11.75	11.81	11.76	11.75	11.92	12.06	11.88	12.07
802.11a	5240	48*	11.59	11.54	11.63	11.63	11.72	12.02	11.97	11.92
802.11a	5260	52*	**11.54**	11.55	11.34	11.44	11.68	11.73	11.74	11.74
802.11a	5280	56	11.37	11.33	11.36	11.36	11.52	11.53	11.68	11.72
802.11a	5300	60	11.24	11.38	11.23	11.29	11.31	11.50	11.59	11.55
802.11a	5320	64*	11.23	11.07	11.18	11.18	11.44	11.56	11.36	11.51
802.11a	5500	100	11.40	11.38	11.30	11.25	11.90	11.64	11.74	11.84
802.11a	5520	104*	11.45	11.48	11.45	11.56	11.91	11.71	11.64	12.06
802.11a	5540	108	11.53	11.15	11.19	11.41	11.96	11.66	11.58	11.98
802.11a	5560	112	11.49	11.37	11.22	11.38	11.80	11.55	11.63	11.93
802.11a	5580	116*	11.41	11.25	11.25	11.47	11.95	11.72	11.39	11.94
802.11a	5600	120	N/A	N/A	N/A	N/A	N/A	N/A	N/A	N/A
802.11a	5620	124	N/A	N/A	N/A	N/A	N/A	N/A	N/A	N/A
802.11a	5640	128	N/A	N/A	N/A	N/A	N/A	N/A	N/A	N/A
802.11a	5660	132	11.54	11.35	11.32	11.62	11.95	11.54	11.71	11.91
802.11a	5680	136*	11.68	11.33	11.54	11.40	12.09	11.49	11.77	12.10
802.11a	5700	140	**11.92**	11.49	11.43	11.49	12.02	11.86	11.89	12.12
802.11a	5745	149*	12.24	12.05	12.25	12.22	12.45	12.33	12.44	12.46
802.11a	5765	153	**12.41**	12.14	12.11	12.26	12.37	12.49	12.37	12.37
802.11a	5785	157*	12.31	12.09	12.04	12.21	12.46	12.48	12.49	12.37
802.11a	5805	161	12.14	12.06	12.13	12.31	12.26	12.40	12.41	12.44
802.11a	5825	165*	12.18	12.05	12.07	12.22	12.33	12.46	12.46	12.48

Per FCC KDB Publication 443999 and RSS-210 A9.2(3), transmission on channels which overlap the 5600-5650 MHz is prohibited as a client. This device does not transmit any beacons or initiate any transmissions in 5.3 and 5.5 GHz Band.

(*) – indicates default channels per KDB Publication 248227 D01v01r02. When the adjacent channels are higher in power then the default channels, these “required channels” are considered for SAR testing instead of the default channels.

© 2014 PCTEST Engineering Laboratory, Inc.

Table 9-30
SISO IEEE 802.11n Average RF Power – 20 MHz Bandwidth- Antenna 1

Mode	Freq [MHz]	Channel	20MHz BW 802.11n (5GHz) Conducted Power [dBm]							
			Data Rate [Mbps]							
			6.5	13	19.5	26	39	52	58.5	65
802.11n	5180	36	11.57	11.53	11.52	11.69	11.82	11.72	11.83	11.82
802.11n	5200	40	11.47	11.59	11.58	11.61	11.71	11.73	11.79	11.80
802.11n	5220	44	11.43	11.51	11.47	11.49	11.58	11.56	11.83	11.71
802.11n	5240	48	11.51	11.62	11.48	11.83	11.73	11.65	11.75	11.76
802.11n	5260	52	11.61	11.69	11.69	12.11	12.05	11.76	12.14	11.83
802.11n	5280	56	11.66	11.69	11.67	12.04	12.15	11.77	12.17	12.05
802.11n	5300	60	11.76	11.70	11.74	12.18	12.08	11.93	12.02	12.01
802.11n	5320	64	11.69	11.79	11.72	12.14	12.15	11.87	12.17	12.11
802.11n	5500	100	11.78	11.68	11.68	12.13	12.07	12.10	12.17	12.07
802.11n	5520	104	11.79	11.87	11.83	12.04	12.15	12.12	12.22	12.10
802.11n	5540	108	11.82	11.78	11.78	12.13	12.11	12.13	12.21	12.18
802.11n	5560	112	11.86	11.87	11.82	12.18	12.17	12.20	12.14	12.14
802.11n	5580	116	11.93	11.93	11.81	12.13	12.08	12.22	12.21	12.15
802.11n	5600	120	N/A	N/A	N/A	N/A	N/A	N/A	N/A	N/A
802.11n	5620	124	N/A	N/A	N/A	N/A	N/A	N/A	N/A	N/A
802.11n	5640	128	N/A	N/A	N/A	N/A	N/A	N/A	N/A	N/A
802.11n	5660	132	11.96	11.94	11.89	12.04	12.19	12.19	12.23	12.17
802.11n	5680	136	11.87	11.86	11.79	12.23	12.15	12.21	12.19	12.16
802.11n	5700	140	11.85	11.86	11.90	12.17	12.18	12.23	12.22	12.18
802.11n	5745	149	11.92	11.58	11.63	11.87	11.89	11.94	11.88	11.92
802.11n	5765	153	11.58	11.58	11.59	11.89	11.88	11.91	11.82	11.85
802.11n	5785	157	11.50	11.50	11.51	11.91	11.77	11.83	11.80	11.83
802.11n	5805	161	11.47	11.50	11.46	11.71	11.86	11.76	11.78	11.83
802.11n	5825	165	11.33	11.37	11.40	11.78	11.70	11.81	11.72	11.72

© 2014 PCTEST Engineering Laboratory, Inc.

Table 9-31
SISO IEEE 802.11n Average RF Power – 20 MHz Bandwidth- Antenna 2

Mode	Freq [MHz]	Channel	20MHz BW 802.11n (5GHz) Conducted Power [dBm]							
			Data Rate [Mbps]							
			6.5	13	19.5	26	39	52	58.5	65
802.11n	5180	36	11.96	11.94	11.87	12.02	12.07	12.05	12.08	12.07
802.11n	5200	40	11.96	11.78	11.99	12.06	12.13	12.00	12.06	12.11
802.11n	5220	44	11.86	11.86	11.97	12.03	12.09	12.04	12.10	12.15
802.11n	5240	48	11.83	11.83	11.92	11.94	12.11	11.91	12.10	12.13
802.11n	5260	52	11.56	11.50	11.53	11.68	11.76	11.74	11.69	11.71
802.11n	5280	56	11.67	11.63	11.57	11.69	11.76	11.72	11.72	11.71
802.11n	5300	60	11.55	11.54	11.51	11.76	11.74	11.70	11.67	11.71
802.11n	5320	64	11.47	11.51	11.42	11.66	11.61	11.62	11.56	11.59
802.11n	5500	100	11.24	11.28	11.29	11.81	11.56	11.59	11.44	11.65
802.11n	5520	104	11.38	11.30	11.31	11.68	11.55	11.63	11.72	11.63
802.11n	5540	108	11.38	11.41	11.39	11.59	11.63	11.66	11.73	11.56
802.11n	5560	112	11.32	11.51	11.20	11.68	11.63	11.52	11.57	11.63
802.11n	5580	116	11.54	11.42	11.45	11.54	11.71	11.54	11.57	11.48
802.11n	5600	120	N/A	N/A	N/A	N/A	N/A	N/A	N/A	N/A
802.11n	5620	124	N/A	N/A	N/A	N/A	N/A	N/A	N/A	N/A
802.11n	5640	128	N/A	N/A	N/A	N/A	N/A	N/A	N/A	N/A
802.11n	5660	132	11.52	11.45	11.46	11.79	11.78	11.79	11.86	11.73
802.11n	5680	136	11.70	11.61	11.63	11.74	11.88	11.87	11.78	11.74
802.11n	5700	140	11.51	11.40	11.49	11.77	11.82	11.73	11.67	11.61
802.11n	5745	149	11.75	11.30	11.12	11.61	11.66	11.71	11.50	11.58
802.11n	5765	153	11.32	11.32	11.15	11.67	11.61	11.52	11.57	11.56
802.11n	5785	157	11.22	11.30	11.11	11.59	11.52	11.53	11.48	11.55
802.11n	5805	161	11.29	11.22	11.18	11.51	11.49	11.49	11.52	11.66
802.11n	5825	165	11.23	11.28	11.17	11.54	11.51	11.50	11.47	11.60

© 2014 PCTEST Engineering Laboratory, Inc.

Table 9-32
MIMO IEEE 802.11n Average RF Power – 20 MHz Bandwidth

20MHz BW 802.11n (5GHz) Conducted Power [dBm]			
Mode	Freq [MHz]	Channel	Data Rate [Mbps]
			13
802.11n	5180	36	**14.78**
802.11n	5200	40	14.73
802.11n	5220	44	14.66
802.11n	5240	48	14.68
802.11n	5260	52	14.60
802.11n	5280	56	**14.67**
802.11n	5300	60	14.67
802.11n	5320	64	14.59
802.11n	5500	100	14.53
802.11n	5520	104	14.60
802.11n	5540	108	14.62
802.11n	5560	112	14.61
802.11n	5580	116	14.75
802.11n	5600	120	N/A
802.11n	5620	124	N/A
802.11n	5640	128	N/A
802.11n	5660	132	14.75
802.11n	5680	136	**14.80**
802.11n	5700	140	14.69
802.11n	5745	149	**14.85**
802.11n	5765	153	14.46
802.11n	5785	157	14.38
802.11n	5805	161	14.39
802.11n	5825	165	14.29

Table 9-33
SISO IEEE 802.11n Average RF Power – 40 MHz Bandwidth- Antenna 1

Mode	Freq [MHz]	Channel	40MHz BW 802.11n (5GHz) Conducted Power [dBm]							
			Data Rate [Mbps]							
			13.5	27	40.5	54	81	108	121.5	135
802.11n	5190	38	9.19	8.95	9.14	9.48	9.38	9.25	9.34	9.41
802.11n	5230	46	9.09	9.20	9.21	9.44	9.14	9.32	9.43	9.18
802.11n	5270	54	9.07	9.30	9.07	9.22	9.31	9.38	9.40	9.36
802.11n	5310	62	9.03	9.09	9.32	9.45	9.46	9.46	9.42	9.42
802.11n	5510	102	9.47	9.30	9.27	9.37	9.37	9.37	9.49	9.19
802.11n	5550	110	9.35	9.45	9.49	9.49	9.47	9.43	9.30	9.36
802.11n	5590	118	N/A	N/A	N/A	N/A	N/A	N/A	N/A	N/A
802.11n	5630	126	N/A	N/A	N/A	N/A	N/A	N/A	N/A	N/A
802.11n	5670	134	9.48	9.20	9.32	9.47	9.41	9.45	9.48	9.22
802.11n	5755	151	9.25	9.21	9.17	9.24	9.16	9.21	9.15	9.16
802.11n	5795	159	9.06	9.02	9.14	9.21	9.30	9.28	9.27	9.19

© 2014 PCTEST Engineering Laboratory, Inc.

Table 9-34
SISO IEEE 802.11n Average RF Power – 40 MHz Bandwidth- Antenna 2

Mode	Freq [MHz]	Channel	40MHz BW 802.11n (5GHz) Conducted Power [dBm]							
			Data Rate [Mbps]							
			13.5	27	40.5	54	81	108	121.5	135
802.11n	5190	38	9.29	9.26	9.41	9.40	9.41	9.26	9.35	9.24
802.11n	5230	46	9.27	9.34	9.15	9.49	9.32	9.40	9.19	9.27
802.11n	5270	54	8.94	8.96	8.93	9.34	9.19	9.17	9.31	9.22
802.11n	5310	62	8.73	8.99	8.82	8.90	9.11	9.10	9.21	9.22
802.11n	5510	102	8.80	8.93	8.75	8.99	9.27	9.14	9.43	9.21
802.11n	5550	110	8.80	9.02	8.88	8.95	9.06	9.02	9.30	9.26
802.11n	5590	118	N/A	N/A	N/A	N/A	N/A	N/A	N/A	N/A
802.11n	5630	126	N/A	N/A	N/A	N/A	N/A	N/A	N/A	N/A
802.11n	5670	134	8.77	9.04	9.05	9.17	9.25	9.22	9.35	9.28
802.11n	5755	151	8.58	8.81	8.64	8.63	8.88	9.07	9.14	8.83
802.11n	5795	159	8.72	8.56	8.52	8.92	8.74	8.88	8.82	9.08

Table 9-35
MIMO IEEE 802.11n Average RF Power – 40 MHz Bandwidth

Mode	Freq [MHz]	Channel	Data Rate [Mbps]
			27
802.11n	5190	38	12.25
802.11n	5230	46	12.19
802.11n	5270	54	12.02
802.11n	5310	62	11.89
802.11n	5510	102	12.16
802.11n	5550	110	12.09
802.11n	5590	118	N/A
802.11n	5630	126	N/A
802.11n	5670	134	12.15
802.11n	5755	151	11.94
802.11n	5795	159	11.90

Table 9-36
SISO IEEE 802.11ac Average RF Power – 80 MHz Bandwidth- Antenna 1

Mode	Freq [MHz]	Channel	80MHz BW 802.11ac (5GHz) Conducted Power [dBm]									
			Data Rate [Mbps]									
			29.3	58.5	87.8	117	175.5	234	263.3	292.5	351	390
802.11ac	5210	42	**9.88**	9.71	9.61	9.99	10.07	9.94	9.89	9.95	10.04	10.02
802.11ac	5290	58	**9.96**	9.71	9.65	10.10	10.10	10.01	9.92	10.04	10.13	10.15
802.11ac	5530	106	**9.92**	9.98	9.95	10.01	10.13	9.93	9.87	9.97	10.06	10.05
802.11ac	5775	155	**9.62**	9.71	9.58	9.74	9.85	9.70	9.65	9.76	9.74	9.75

Table 9-37
SISO IEEE 802.11ac Average RF Power – 80 MHz Bandwidth- Antenna 2

Mode	Freq [MHz]	Channel	80MHz BW 802.11ac (5GHz) Conducted Power [dBm]									
			Data Rate [Mbps]									
			29.3	58.5	87.8	117	175.5	234	263.3	292.5	351	390
802.11ac	5210	42	**10.04**	9.95	9.98	10.17	10.24	10.15	10.26	10.12	10.21	10.19
802.11ac	5290	58	**9.59**	9.54	9.60	9.77	9.76	9.64	9.80	9.61	9.79	9.71
802.11ac	5530	106	**9.50**	9.43	9.55	9.59	9.72	9.72	9.68	9.71	9.66	9.62
802.11ac	5775	155	**10.31**	10.42	10.33	10.40	10.49	10.40	10.49	10.31	10.46	10.41

© 2014 PCTEST Engineering Laboratory, Inc.

Table 9-38
MIMO IEEE 802.11ac Average RF Power – 80 MHz Bandwidth

802.11ac (5 GHz) Conducted Power [dBm]			
Mode	Freq [MHz]	Channel	Data Rate [Mbps]
			58.5
802.11ac	5210	42	12.97
802.11ac	5290	58	12.79
802.11ac	5530	106	12.72
802.11ac	5775	155	12.99

Justification for reduced test configurations for WIFI channels per KDB Publication 248227 D01v01r02 and October 2012/April 2013 FCC/TCB Meeting Notes:

- For 2.4 GHz SISO operations, highest average RF output power channel for the lowest data rate for IEEE 802.11b were selected for SAR evaluation. Other IEEE 802.11 SISO modes (including 802.11g/n) were not investigated since the average output powers over all channels and data rates were not more than 0.25 dB higher than the tested channel in the lowest data rate of IEEE 802.11b mode.
- For 5 GHz SISO operations, highest average RF output power channel for the lowest data rate for IEEE 802.11a were selected for SAR evaluation. Other IEEE 802.11 SISO modes (including 802.11n 20 MHz and 40 MHz) were not investigated since the average output powers over all channels and data rates were not more than 0.25 dB higher than the tested channel in the lowest data rate of IEEE 802.11a mode.
- Full SAR tests for all SISO IEEE 802.11ac configurations were not required because the average output power was not more than 0.25 dB higher than IEEE 802.11a mode. IEEE 802.11ac in SISO mode was evaluated for the highest IEEE 802.11a position in each 5 GHz band and exposure condition.
- For MIMO 2.4 GHz and 5 GHz operations, the highest average RF output power channel for the lowest data rate for IEEE 802.11n (20 MHz bandwidth) was selected for SAR evaluation. Other IEEE 802.11 modes and bandwidths were not investigated for MIMO operations since the maximum allowed output power (including tolerance) was not higher for these modes.
- The individual spectra for each 2x2 MIMO WIFI Antenna were summed mathematically in linear power units for the MIMO output power measurements.
- When the maximum extrapolated peak SAR of the zoom scan for the maximum output channel is <1.6 W/kg and the reported 1g averaged SAR is <0.8 W/kg, SAR testing on other channels is not required. Otherwise, the other default (or corresponding required) test channels were additionally tested using the lowest data rate.
- The bolded data rate and channel above were tested for SAR.

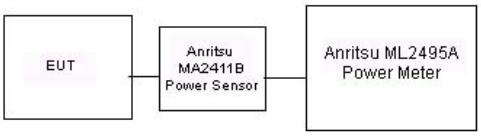

Figure 9-2
Power Measurement Setup for Bandwidths < 50 MHz

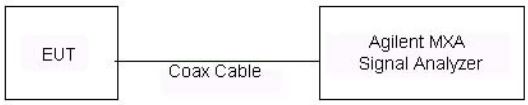

Figure 9-3
Power Measurement Setup for Bandwidths > 50 MHz

© 2014 PCTEST Engineering Laboratory, Inc.

10 SYSTEM VERIFICATION

10.1 Tissue Verification

Table 10-1
Measured Head Tissue Properties

Calibrated for Tests Performed on:	Tissue Type	Tissue Temp During Calibration (C˚)	Measured Frequency (MHz)	Measured Conductivity, σ (S/m)	Measured Dielectric Constant, ε	TARGET Conductivity, σ (S/m)	TARGET Dielectric Constant, ε	% dev σ	% dev ε
9/1/2014	750H	22.0	680	0.851	42.005	0.888	42.305	-4.17%	-0.71%
			695	0.865	41.822	0.889	42.227	-2.70%	-0.96%
			710	0.879	41.593	0.890	42.149	-1.24%	-1.32%
			725	0.892	41.353	0.891	42.071	0.11%	-1.71%
			740	0.904	41.151	0.893	41.994	1.23%	-2.01%
			755	0.917	40.938	0.894	41.916	2.57%	-2.33%
9/8/2014	835H	23.0	820	0.919	42.645	0.899	41.578	2.22%	2.57%
			835	0.934	42.466	0.900	41.500	3.78%	2.33%
			850	0.949	42.271	0.916	41.500	3.60%	1.86%
9/2/2014	1750H	22.7	1710	1.307	40.446	1.348	40.142	-3.04%	0.76%
			1750	1.344	40.243	1.371	40.079	-1.97%	0.41%
			1790	1.383	40.084	1.394	40.016	-0.79%	0.17%
9/8/2014	1900H	22.6	1850	1.402	39.926	1.400	40.000	0.14%	-0.18%
			1880	1.434	39.807	1.400	40.000	2.43%	-0.48%
			1910	1.469	39.675	1.400	40.000	4.93%	-0.81%
8/28/2014	2450H	22.2	2401	1.795	38.318	1.756	39.287	2.22%	-2.47%
			2450	1.861	38.157	1.800	39.200	3.39%	-2.66%
			2499	1.906	37.915	1.853	39.138	2.86%	-3.12%
8/12/2014	5200H-5800H	22.8	5180	4.700	35.571	4.635	36.009	1.40%	-1.22%
			5200	4.724	35.490	4.655	35.986	1.48%	-1.38%
			5220	4.766	35.472	4.676	35.963	1.92%	-1.37%
			5240	4.800	35.467	4.696	35.940	2.21%	-1.32%
			5260	4.825	35.471	4.717	35.917	2.29%	-1.24%
			5280	4.830	35.454	4.737	35.894	1.96%	-1.23%
			5300	4.826	35.388	4.758	35.871	1.43%	-1.35%
			5320	4.850	35.358	4.778	35.849	1.51%	-1.37%
			5500	5.059	35.124	4.963	35.643	1.93%	-1.46%
			5520	5.078	35.101	4.983	35.620	1.91%	-1.46%
			5540	5.076	35.089	5.004	35.597	1.44%	-1.43%
			5580	5.090	34.981	5.045	35.551	0.89%	-1.60%
			5600	5.129	34.965	5.065	35.529	1.26%	-1.59%
			5680	5.205	34.890	5.147	35.437	1.13%	-1.54%
			5700	5.219	34.819	5.168	35.414	0.99%	-1.68%
			5745	5.306	34.780	5.214	35.363	1.76%	-1.65%
			5765	5.335	34.765	5.234	35.340	1.93%	-1.63%
			5785	5.340	34.778	5.255	35.317	1.62%	-1.53%
			5800	5.343	34.693	5.270	35.300	1.39%	-1.72%
			5825	5.358	34.622	5.296	35.271	1.17%	-1.84%

The above measured tissue parameters were used in the DASY software. The DASY software was used to perform interpolation to determine the dielectric parameters at the SAR test device frequencies (per KDB Publication 865664 and IEEE 1528-2013 6.6.1.2). The tissue parameters listed in the SAR test plots may slightly differ from the table above due to significant digit rounding in the software.

© 2014 PCTEST Engineering Laboratory, Inc.

Table 10-2
Measured Body Tissue Properties

Calibrated for Tests Performed on:	Tissue Type	Tissue Temp During Calibration (C˚)	Measured Frequency (MHz)	Measured Conductivity, σ (S/m)	Measured Dielectric Constant, ε	TARGET Conductivity, σ (S/m)	TARGET Dielectric Constant, ε	% dev σ	% dev ε
8/31/2014	750B	22.1	695	0.913	54.827	0.959	55.745	-4.80%	-1.65%
			710	0.927	54.670	0.960	55.687	-3.44%	-1.83%
			725	0.942	54.492	0.961	55.629	-1.98%	-2.04%
			740	0.955	54.334	0.963	55.570	-0.83%	-2.22%
			755	0.969	54.183	0.964	55.512	0.52%	-2.39%
9/9/2014	750B	23.6	695	0.923	55.005	0.959	55.745	-3.75%	-1.33%
			710	0.937	54.828	0.960	55.687	-2.40%	-1.54%
			725	0.951	54.685	0.961	55.629	-1.04%	-1.70%
			740	0.964	54.534	0.963	55.570	0.10%	-1.86%
			755	0.978	54.335	0.964	55.512	1.45%	-2.12%
9/3/2014	835B	22.0	820	0.990	53.416	0.969	55.258	2.17%	-3.33%
			835	1.005	53.279	0.970	55.200	3.61%	-3.48%
			850	1.018	53.138	0.988	55.154	3.04%	-3.66%
9/8/2014	835B	23.5	820	1.001	54.348	0.969	55.258	3.30%	-1.65%
			835	1.015	54.216	0.970	55.200	4.64%	-1.78%
			850	1.030	54.054	0.988	55.154	4.25%	-1.99%
9/5/2014	1750B	23.4	1710	1.391	52.307	1.463	53.537	-4.92%	-2.30%
			1750	1.430	52.109	1.488	53.432	-3.90%	-2.48%
			1790	1.482	52.079	1.514	53.326	-2.11%	-2.34%
9/2/2014	1900B	21.1	1850	1.475	52.946	1.520	53.300	-2.96%	-0.66%
			1880	1.511	52.829	1.520	53.300	-0.59%	-0.88%
			1910	1.549	52.728	1.520	53.300	1.91%	-1.07%
9/4/2014	1900B	21.1	1850	1.490	52.805	1.520	53.300	-1.97%	-0.93%
			1880	1.525	52.667	1.520	53.300	0.33%	-1.19%
			1910	1.570	52.649	1.520	53.300	3.29%	-1.22%
9/9/2014	1900B	22.8	1850	1.506	52.505	1.520	53.300	-0.92%	-1.49%
			1880	1.541	52.416	1.520	53.300	1.38%	-1.66%
			1910	1.579	52.298	1.520	53.300	3.88%	-1.88%
8/7/2014	2450B	22.9	2401	1.839	51.034	1.903	52.765	-3.36%	-3.28%
			2450	1.903	50.849	1.950	52.700	-2.41%	-3.51%
			2499	1.969	50.697	2.019	52.638	-2.48%	-3.69%
8/11/2014	5200B-5800B	20.7	5180	5.353	47.869	5.276	49.041	1.46%	-2.39%
			5200	5.365	47.684	5.299	49.014	1.25%	-2.71%
			5220	5.415	47.736	5.323	48.987	1.73%	-2.55%
			5240	5.425	47.793	5.346	48.960	1.48%	-2.38%
			5260	5.447	47.871	5.369	48.933	1.45%	-2.17%
			5280	5.478	47.828	5.393	48.906	1.58%	-2.20%
			5300	5.483	47.707	5.416	48.879	1.24%	-2.40%
			5320	5.524	47.617	5.439	48.851	1.56%	-2.53%
			5500	5.726	47.237	5.650	48.607	1.35%	-2.82%
			5520	5.732	47.156	5.673	48.580	1.04%	-2.93%
			5540	5.755	46.979	5.696	48.553	1.04%	-3.24%
			5580	5.838	46.840	5.743	48.499	1.65%	-3.42%
			5600	5.861	46.839	5.766	48.471	1.65%	-3.37%
			5680	5.917	46.318	5.860	48.363	0.97%	-4.23%
			5700	5.978	46.386	5.883	48.336	1.61%	-4.03%
			5745	5.988	46.411	5.936	48.275	0.88%	-3.86%
			5765	5.997	46.229	5.959	48.248	0.64%	-4.18%
			5785	6.021	45.999	5.982	48.220	0.65%	-4.61%
			5800	6.062	45.948	6.000	48.200	1.03%	-4.67%
			5805	6.093	45.915	6.006	48.193	1.45%	-4.73%
			5825	6.138	46.091	6.029	48.166	1.81%	-4.31%
8/13/2014	5200B-5800B	24.0	5180	5.237	48.386	5.276	49.041	-0.74%	-1.34%
			5200	5.262	48.246	5.299	49.014	-0.70%	-1.57%
			5220	5.299	48.228	5.323	48.987	-0.45%	-1.55%
			5240	5.344	48.146	5.346	48.960	-0.04%	-1.66%
			5260	5.397	48.132	5.369	48.933	0.52%	-1.64%
			5280	5.416	48.124	5.393	48.906	0.43%	-1.60%
			5300	5.427	48.087	5.416	48.879	0.20%	-1.62%
			5320	5.450	47.979	5.439	48.851	0.20%	-1.79%
			5500	5.733	47.550	5.650	48.607	1.47%	-2.17%
			5520	5.773	47.507	5.673	48.580	1.76%	-2.21%
			5540	5.795	47.517	5.696	48.553	1.74%	-2.13%
			5580	5.835	47.398	5.743	48.499	1.60%	-2.27%
			5600	5.871	47.349	5.766	48.471	1.82%	-2.31%
			5680	5.999	47.173	5.860	48.363	2.37%	-2.46%
			5700	6.018	47.133	5.883	48.336	2.29%	-2.49%
			5745	6.114	47.032	5.936	48.275	3.00%	-2.57%
			5800	6.186	46.881	6.000	48.200	3.10%	-2.74%

The above measured tissue parameters were used in the DASY software. The DASY software was used to perform interpolation to determine the dielectric parameters at the SAR test device frequencies (per KDB Publication 865664 and IEEE 1528-2013 6.6.1.2). The tissue parameters listed in the SAR test plots may slightly differ from the table above due to significant digit rounding in the software.

© 2014 PCTEST Engineering Laboratory, Inc.

10.2 Test System Verification

Prior to SAR assessment, the system is verified to ±10% of the SAR measurement on the reference dipole at the time of calibration by the calibration facility. Full system validation status and result summary can be found in Appendix E.

Table 10-3
System Verification Results

System Verification TARGET & MEASURED												
SAR System #	Tissue Frequency (MHz)	Tissue Type	Date:	Amb. Temp (°C)	Liquid Temp (°C)	Input Power (W)	Dipole SN	Probe SN	Measured SAR_{1g} (W/kg)	1 W Target SAR_{1g} (W/kg)	1 W Normalized SAR_{1g} (W/kg)	$Deviation_{1g}$ (%)
D	750	HEAD	09/01/2014	24.0	22.1	0.100	1003	3263	0.831	8.370	8.310	-0.72%
H	835	HEAD	09/08/2014	24.8	22.8	0.100	4d119	3319	0.941	9.220	9.410	2.06%
G	1750	HEAD	09/02/2014	23.4	22.7	0.100	1008	3258	3.400	36.900	34.000	-7.86%
J	1900	HEAD	09/08/2014	23.6	22.4	0.100	5d141	3022	4.230	40.100	42.300	5.49%
G	2450	HEAD	08/28/2014	24.1	22.2	0.100	797	3258	4.820	51.800	48.200	-6.95%
E	5200	HEAD	08/12/2014	24.2	22.8	0.100	1057	3914	7.570	78.000	75.700	-2.95%
E	5300	HEAD	08/12/2014	24.2	22.9	0.100	1057	3914	8.180	83.000	81.800	-1.45%
E	5500	HEAD	08/12/2014	24.3	22.9	0.100	1057	3914	7.920	84.300	79.200	-6.05%
E	5600	HEAD	08/12/2014	24.2	22.9	0.100	1057	3914	8.500	83.500	85.000	1.80%
E	5800	HEAD	08/12/2014	24.2	22.9	0.100	1057	3914	7.700	79.300	77.000	-2.90%
I	750	BODY	08/31/2014	22.9	22.1	0.100	1003	3209	0.908	8.770	9.080	3.53%
I	750	BODY	09/09/2014	24.5	24.0	0.100	1003	3209	0.917	8.770	9.170	4.56%
D	835	BODY	09/03/2014	24.0	22.1	0.100	4d119	3263	0.979	9.340	9.790	4.82%
D	835	BODY	09/08/2014	23.8	23.5	0.100	4d119	3263	0.974	9.340	9.740	4.28%
K	1750	BODY	09/05/2014	23.8	21.7	0.100	1008	3287	3.780	37.600	37.800	0.53%
J	1900	BODY	09/02/2014	21.2	21.9	0.100	5d141	3332	4.010	40.600	40.100	-1.23%
J	1900	BODY	09/04/2014	23.1	20.8	0.100	5d141	3022	4.170	40.600	41.700	2.71%
J	1900	BODY	09/09/2014	23.6	23.2	0.100	5d141	3022	4.240	40.600	42.400	4.43%
H	2450	BODY	08/07/2014	23.9	23.0	0.100	797	3319	5.240	49.400	52.400	6.07%
A	5200	BODY	08/11/2014	22.4	21.3	0.100	1007	3920	7.510	72.600	75.100	3.44%
A	5300	BODY	08/11/2014	22.4	21.3	0.100	1007	3920	7.720	74.700	77.200	3.35%
A	5500	BODY	08/11/2014	22.4	21.3	0.100	1007	3920	7.810	75.900	78.100	2.90%
A	5600	BODY	08/11/2014	22.4	21.3	0.100	1007	3920	7.660	77.300	76.600	-0.91%
A	5800	BODY	08/11/2014	22.4	21.3	0.100	1007	3920	7.230	72.900	72.300	-0.82%
I	5800	BODY	08/13/2014	24.4	24.0	0.100	1057	3589	7.350	74.300	73.500	-1.08%

© 2014 PCTEST Engineering Laboratory, Inc.

Table 10-4
System Verification Results – Extremity

System Verification TARGET & MEASURED												
SAR System #	Tissue Frequency (MHz)	Tissue Type	Date:	Amb. Temp (°C)	Liquid Temp (°C)	Input Power (W)	Dipole SN	Probe SN	Measured SAR_{10g} (W/kg)	1 W Target SAR_{10g} (W/kg)	1 W Normalized SAR_{10g}	Deviation$_{10g}$ (%)
I	5200	BODY	08/13/2014	24.4	24.0	0.100	1057	3589	2.250	21.000	22.500	7.14%
I	5300	BODY	08/13/2014	24.4	24.1	0.100	1057	3589	2.330	21.500	23.300	8.37%
I	5500	BODY	08/13/2014	24.3	23.9	0.100	1057	3589	2.300	22.000	23.000	4.55%
I	5600	BODY	08/13/2014	24.2	23.9	0.100	1057	3589	2.240	22.200	22.400	0.90%

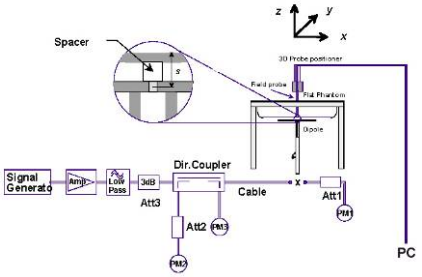

Figure 10-1
System Verification Setup Diagram

Figure 10-2
System Verification Setup Photo

© 2014 PCTEST Engineering Laboratory, Inc.

11 SAR DATA SUMMARY

11.1 Standalone Head SAR Data

Table 11-1
Cell. CDMA Head SAR

MEASUREMENT RESULTS															
FREQUENCY		Mode/Band	Service	Maximum Allowed Power [dBm]	Conducted Power [dBm]	Power Drift [dB]	Side	Test Position	Cover Type	Device Serial Number	Duty Cycle	SAR (1g)	Scaling Factor	Scaled SAR (1g)	Plot #
MHz	Ch.											(W/kg)		(W/kg)	
836.52	384	Cell. CDMA	RC3 / SO55	25.0	24.26	-0.04	Right	Cheek	Standard	33ED6	1:1	0.118	1.186	0.140	
836.52	384	Cell. CDMA	RC3 / SO55	25.0	24.26	0.21	Right	Tilt	Standard	33ED6	1:1	0.045	1.186	0.053	
836.52	384	Cell. CDMA	RC3 / SO55	25.0	24.26	0.08	Left	Cheek	Standard	33ED6	1:1	0.187	1.186	0.222	
836.52	384	Cell. CDMA	RC3 / SO55	25.0	24.26	0.07	Left	Cheek	Wireless Charging	33ED6	1:1	0.149	1.186	0.177	
836.52	384	Cell. CDMA	RC3 / SO55	25.0	24.26	0.14	Left	Tilt	Standard	33ED6	1:1	0.057	1.186	0.068	
836.52	384	Cell. CDMA	RC3 / SO55	23.0	22.12	0.10	Right	Cheek	Standard	33ED2	1:1	0.064	1.225	0.078	
836.52	384	Cell. CDMA	RC3 / SO55	23.0	22.12	0.20	Right	Tilt	Standard	33ED2	1:1	0.022	1.225	0.027	
836.52	384	Cell. CDMA	RC3 / SO55	23.0	22.12	0.10	Left	Cheek	Standard	33ED2	1:1	0.099	1.225	0.121	
836.52	384	Cell. CDMA	RC3 / SO55	23.0	22.12	0.11	Left	Tilt	Standard	33ED2	1:1	0.029	1.225	0.036	
836.52	384	Cell. CDMA	EVDO Rev. A	25.0	24.35	-0.16	Right	Cheek	Standard	33ED6	1:1	0.190	1.161	0.221	
836.52	384	Cell. CDMA	EVDO Rev. A	25.0	24.35	0.08	Right	Tilt	Standard	33ED6	1:1	0.066	1.161	0.077	
836.52	384	Cell. CDMA	EVDO Rev. A	25.0	24.35	0.03	Left	Cheek	Standard	33ED6	1:1	0.194	1.161	0.225	A1
836.52	384	Cell. CDMA	EVDO Rev. A	25.0	24.35	0.04	Left	Cheek	Wireless Charging	33ED6	1:1	0.166	1.161	0.193	
836.52	384	Cell. CDMA	EVDO Rev. A	25.0	24.35	0.19	Left	Tilt	Standard	33ED6	1:1	0.061	1.161	0.071	
836.52	384	Cell. CDMA	EVDO Rev. A	23.0	22.04	0.09	Right	Cheek	Standard	33ED2	1:1	0.089	1.247	0.111	
836.52	384	Cell. CDMA	EVDO Rev. A	23.0	22.04	0.21	Right	Tilt	Standard	33ED2	1:1	0.030	1.247	0.037	
836.52	384	Cell. CDMA	EVDO Rev. A	23.0	22.04	0.12	Left	Cheek	Standard	33ED2	1:1	0.105	1.247	0.131	
836.52	384	Cell. CDMA	EVDO Rev. A	23.0	22.04	0.17	Left	Tilt	Standard	33ED2	1:1	0.030	1.247	0.037	
ANSI / IEEE C95.1 1992 - SAFETY LIMIT Spatial Peak Uncontrolled Exposure/General Population							Head 1.6 W/kg (mW/g) averaged over 1 gram								

Table 11-2
PCS CDMA Head SAR

MEASUREMENT RESULTS															
FREQUENCY		Mode/Band	Service	Maximum Allowed Power [dBm]	Conducted Power [dBm]	Power Drift [dB]	Side	Test Position	Cover Type	Device Serial Number	Duty Cycle	SAR (1g)	Scaling Factor	Scaled SAR (1g)	Plot #
MHz	Ch.											(W/kg)		(W/kg)	
1880.00	600	PCS CDMA	RC3 / SO55	25.0	24.24	0.12	Right	Cheek	Standard	33ED8	1:1	0.232	1.191	0.276	
1880.00	600	PCS CDMA	RC3 / SO55	25.0	24.24	0.15	Right	Tilt	Standard	33ED8	1:1	0.133	1.191	0.158	
1880.00	600	PCS CDMA	RC3 / SO55	25.0	24.24	0.04	Left	Cheek	Standard	33ED8	1:1	0.240	1.191	0.286	
1880.00	600	PCS CDMA	RC3 / SO55	25.0	24.24	0.18	Left	Cheek	Wireless Charging	33ED8	1:1	0.195	1.191	0.232	
1880.00	600	PCS CDMA	RC3 / SO55	25.0	24.24	-0.15	Left	Tilt	Standard	33ED8	1:1	0.054	1.191	0.064	
1880.00	600	PCS CDMA	RC3 / SO55	23.0	22.18	0.04	Right	Cheek	Standard	33ED2	1:1	0.057	1.208	0.069	
1880.00	600	PCS CDMA	RC3 / SO55	23.0	22.18	0.00	Right	Tilt	Standard	33ED2	1:1	0.020	1.208	0.024	
1880.00	600	PCS CDMA	RC3 / SO55	23.0	22.18	-0.09	Left	Cheek	Standard	33ED2	1:1	0.030	1.208	0.036	
1880.00	600	PCS CDMA	RC3 / SO55	23.0	22.18	0.03	Left	Tilt	Standard	33ED2	1:1	0.016	1.208	0.019	
1880.00	600	PCS CDMA	EVDO Rev. A	25.0	24.22	0.05	Right	Cheek	Standard	33ED8	1:1	0.248	1.197	0.297	
1880.00	600	PCS CDMA	EVDO Rev. A	25.0	24.22	-0.12	Right	Tilt	Standard	33ED8	1:1	0.119	1.197	0.142	
1880.00	600	PCS CDMA	EVDO Rev. A	25.0	24.22	-0.19	Left	Cheek	Standard	33ED8	1:1	0.292	1.197	**0.350**	A2
1880.00	600	PCS CDMA	EVDO Rev. A	25.0	24.22	0.13	Left	Cheek	Wireless Charging	33ED8	1:1	0.252	1.197	0.302	
1880.00	600	PCS CDMA	EVDO Rev. A	25.0	24.22	-0.13	Left	Tilt	Standard	33ED8	1:1	0.056	1.197	0.067	
1880.00	600	PCS CDMA	EVDO Rev. A	23.0	22.04	-0.21	Right	Cheek	Standard	33ED2	1:1	0.065	1.247	0.081	
1880.00	600	PCS CDMA	EVDO Rev. A	23.0	22.04	-0.21	Right	Tilt	Standard	33ED2	1:1	0.018	1.247	0.022	
1880.00	600	PCS CDMA	EVDO Rev. A	23.0	22.04	-0.05	Left	Cheek	Standard	33ED2	1:1	0.029	1.247	0.036	
1880.00	600	PCS CDMA	EVDO Rev. A	23.0	22.04	-0.18	Left	Tilt	Standard	33ED2	1:1	0.017	1.247	0.021	
ANSI / IEEE C95.1 1992 - SAFETY LIMIT Spatial Peak Uncontrolled Exposure/General Population							Head 1.6 W/kg (mW/g) averaged over 1 gram								

© 2014 PCTEST Engineering Laboratory, Inc.

Table 11-3
LTE Band 12 Head SAR

MEASUREMENT RESULTS																					
FREQUENCY			Mode	Bandwidth [MHz]	Cover Type	Maximum Allowed Power [dBm]	Conducted Power [dBm]	Power Drift [dB]	MPR [dB]	Side	Test Position	Modulation	RB Size	RB Offset	Device Serial Number	Duty Cycle	SAR (1g)	Scaling Factor	Scaled SAR (1g)	Plot #
MHz	Ch.																(W/kg)		(W/kg)	
707.50	23095	Mid	LTE Band 12	10	Standard	24.0	23.08	0.10	0	Right	Cheek	QPSK	1	25	33EDD	1:1	0.105	1.236	0.130	A3
707.50	23095	Mid	LTE Band 12	10	Wireless Charging	24.0	23.08	0.08	0	Right	Cheek	QPSK	1	25	33EDD	1:1	0.094	1.236	0.116	
707.50	23095	Mid	LTE Band 12	10	Standard	23.0	22.09	0.07	1	Right	Cheek	QPSK	25	0	33EDD	1:1	0.082	1.233	0.101	
707.50	23095	Mid	LTE Band 12	10	Standard	24.0	23.08	0.00	0	Right	Tilt	QPSK	1	25	33EDD	1:1	0.061	1.236	0.075	
707.50	23095	Mid	LTE Band 12	10	Standard	23.0	22.09	0.16	1	Right	Tilt	QPSK	25	0	33EDD	1:1	0.045	1.233	0.055	
707.50	23095	Mid	LTE Band 12	10	Standard	24.0	23.08	0.08	0	Left	Cheek	QPSK	1	25	33EDD	1:1	0.068	1.236	0.084	
707.50	23095	Mid	LTE Band 12	10	Standard	23.0	22.09	0.15	1	Left	Cheek	QPSK	25	0	33EDD	1:1	0.055	1.233	0.068	
707.50	23095	Mid	LTE Band 12	10	Standard	24.0	23.08	0.08	0	Left	Tilt	QPSK	1	25	33EDD	1:1	0.069	1.236	0.085	
707.50	23095	Mid	LTE Band 12	10	Standard	23.0	22.09	0.17	1	Left	Tilt	QPSK	25	0	33EDD	1:1	0.045	1.233	0.055	
ANSI / IEEE C95.1 1992 - SAFETY LIMIT Spatial Peak Uncontrolled Exposure/General Population										Head 1.6 W/kg (mW/g) averaged over 1 gram										

Table 11-4
LTE Band 5 (Cell) Head SAR

MEASUREMENT RESULTS																					
FREQUENCY			Mode	Bandwidth [MHz]	Cover Type	Maximum Allowed Power [dBm]	Conducted Power [dBm]	Power Drift [dB]	MPR [dB]	Side	Test Position	Modulation	RB Size	RB Offset	Device Serial Number	Duty Cycle	SAR (1g)	Scaling Factor	Scaled SAR (1g)	Plot #
MHz	Ch.																(W/kg)		(W/kg)	
836.50	20525	Mid	LTE Band 5 (Cell)	10	Standard	24.5	24.46	0.03	0	Right	Cheek	QPSK	1	49	33EE3	1:1	0.128	1.009	0.129	
836.50	20525	Mid	LTE Band 5 (Cell)	10	Wireless Charging	24.5	24.46	0.03	0	Right	Cheek	QPSK	1	49	33EE3	1:1	0.138	1.009	0.139	A4
836.50	20525	Mid	LTE Band 5 (Cell)	10	Standard	23.5	23.08	0.08	1	Right	Cheek	QPSK	25	0	33EE3	1:1	0.118	1.102	0.130	
836.50	20525	Mid	LTE Band 5 (Cell)	10	Standard	24.5	24.46	0.15	0	Right	Tilt	QPSK	1	49	33EE3	1:1	0.070	1.009	0.071	
836.50	20525	Mid	LTE Band 5 (Cell)	10	Standard	23.5	23.08	0.08	1	Right	Tilt	QPSK	25	0	33EE3	1:1	0.069	1.102	0.076	
836.50	20525	Mid	LTE Band 5 (Cell)	10	Standard	24.5	24.46	0.11	0	Left	Cheek	QPSK	1	49	33EE3	1:1	0.092	1.009	0.093	
836.50	20525	Mid	LTE Band 5 (Cell)	10	Standard	23.5	23.08	0.17	1	Left	Cheek	QPSK	25	0	33EE3	1:1	0.098	1.102	0.108	
836.50	20525	Mid	LTE Band 5 (Cell)	10	Standard	24.5	24.46	0.12	0	Left	Tilt	QPSK	1	49	33EE3	1:1	0.056	1.009	0.057	
836.50	20525	Mid	LTE Band 5 (Cell)	10	Standard	23.5	23.08	0.12	1	Left	Tilt	QPSK	25	0	33EE3	1:1	0.055	1.102	0.061	
ANSI / IEEE C95.1 1992 - SAFETY LIMIT Spatial Peak Uncontrolled Exposure/General Population										Head 1.6 W/kg (mW/g) averaged over 1 gram										

Table 11-5
LTE Band 4 (AWS) Head SAR

MEASUREMENT RESULTS																					
FREQUENCY			Mode	Bandwidth [MHz]	Cover Type	Maximum Allowed Power [dBm]	Conducted Power [dBm]	Power Drift [dB]	MPR [dB]	Side	Test Position	Modulation	RB Size	RB Offset	Device Serial Number	Duty Cycle	SAR (1g)	Scaling Factor	Scaled SAR (1g)	Plot #
MHz	Ch.																(W/kg)		(W/kg)	
1732.50	20175	Mid	LTE Band 4 (AWS)	20	Standard	24.0	23.64	-0.09	0	Right	Cheek	QPSK	1	0	33ECE	1:1	0.072	1.086	0.078	
1732.50	20175	Mid	LTE Band 4 (AWS)	20	Standard	23.0	22.51	0.09	1	Right	Cheek	QPSK	50	0	33ECE	1:1	0.054	1.119	0.060	
1732.50	20175	Mid	LTE Band 4 (AWS)	20	Standard	24.0	23.64	0.04	0	Right	Tilt	QPSK	1	0	33ECE	1:1	0.094	1.086	0.102	
1732.50	20175	Mid	LTE Band 4 (AWS)	20	Standard	23.0	22.51	0.19	1	Right	Tilt	QPSK	50	0	33ECE	1:1	0.084	1.119	0.094	
1732.50	20175	Mid	LTE Band 4 (AWS)	20	Standard	24.0	23.64	0.13	0	Left	Cheek	QPSK	1	0	33ECE	1:1	0.093	1.086	0.101	
1732.50	20175	Mid	LTE Band 4 (AWS)	20	Standard	23.0	22.51	0.07	1	Left	Cheek	QPSK	50	0	33ECE	1:1	0.074	1.119	0.083	
1732.50	20175	Mid	LTE Band 4 (AWS)	20	Standard	24.0	23.64	0.19	0	Left	Tilt	QPSK	1	0	33ECE	1:1	0.096	1.086	0.104	
1732.50	20175	Mid	LTE Band 4 (AWS)	20	Wireless Charging	24.0	23.64	0.15	0	Left	Tilt	QPSK	1	0	33ECE	1:1	0.104	1.086	0.113	A5
1732.50	20175	Mid	LTE Band 4 (AWS)	20	Standard	23.0	22.51	0.13	1	Left	Tilt	QPSK	50	0	33ECE	1:1	0.085	1.119	0.095	
ANSI / IEEE C95.1 1992 - SAFETY LIMIT Spatial Peak Uncontrolled Exposure/General Population										Head 1.6 W/kg (mW/g) averaged over 1 gram										

© 2014 PCTEST Engineering Laboratory, Inc.

Table 11-6
LTE Band 2 (PCS) Head SAR

MEASUREMENT RESULTS																				
FREQUENCY			Mode	Bandwidth [MHz]	Cover Type	Maximum Allowed Power [dBm]	Conducted Power [dBm]	Power Drift [dB]	MPR [dB]	Side	Test Position	Modulation	RB Size	RB Offset	Device Serial Number	Duty Cycle	SAR (1g)	Scaling Factor	Scaled SAR (1g)	Plot #
MHz	Ch.																(W/kg)		(W/kg)	
1860.00	18700	Low	LTE Band 2 (PCS)	20	Standard	23.5	23.39	-0.02	0	Right	Cheek	QPSK	1	99	33EDE	1:1	0.194	1.026	0.199	A6
1860.00	18700	Low	LTE Band 2 (PCS)	20	Wireless Charging	23.5	23.39	0.10	0	Right	Cheek	QPSK	1	99	33EDE	1:1	0.186	1.026	0.191	
1860.00	18700	Low	LTE Band 2 (PCS)	20	Standard	22.5	22.50	-0.01	1	Right	Cheek	QPSK	50	0	33EDE	1:1	0.162	1.000	0.162	
1860.00	18700	Low	LTE Band 2 (PCS)	20	Standard	23.5	23.39	-0.01	0	Right	Tilt	QPSK	1	99	33EDE	1:1	0.185	1.026	0.190	
1860.00	18700	Low	LTE Band 2 (PCS)	20	Standard	22.5	22.50	0.02	1	Right	Tilt	QPSK	50	0	33EDE	1:1	0.166	1.000	0.166	
1860.00	18700	Low	LTE Band 2 (PCS)	20	Standard	23.5	23.39	0.03	0	Left	Cheek	QPSK	1	99	33EDE	1:1	0.135	1.026	0.139	
1860.00	18700	Low	LTE Band 2 (PCS)	20	Standard	22.5	22.50	0.13	1	Left	Cheek	QPSK	50	0	33EDE	1:1	0.113	1.000	0.113	
1860.00	18700	Low	LTE Band 2 (PCS)	20	Standard	23.5	23.39	-0.09	0	Left	Tilt	QPSK	1	99	33EDE	1:1	0.181	1.026	0.186	
1860.00	18700	Low	LTE Band 2 (PCS)	20	Standard	22.5	22.50	0.00	1	Left	Tilt	QPSK	50	0	33EDE	1:1	0.158	1.000	0.158	
ANSI / IEEE C95.1 1992 - SAFETY LIMIT Spatial Peak Uncontrolled Exposure/General Population										Head 1.6 W/kg (mW/g) averaged over 1 gram										

Table 11-7
DTS Head SAR

MEASUREMENT RESULTS																		
FREQUENCY		Mode	Service	Maximum Allowed Power [dBm]	Conducted Power [dBm]	Power Drift [dB]	Side	Test Position	Antenna Config.	Cover Type	Device Serial Number	Data Rate (Mbps)	Duty Cycle	SAR (1g)	Scaling Factor	Scaled SAR (1g)	Plot #
MHz	Ch.													(W/kg)		(W/kg)	
2462	11	IEEE 802.11b	DSSS	15.5	15.30	0.16	Right	Cheek	1	Standard	015D8	1	1:1	0.314	1.047	0.329	
2462	11	IEEE 802.11b	DSSS	15.5	15.30	0.06	Right	Tilt	1	Standard	015D8	1	1:1	0.206	1.047	0.216	
2462	11	IEEE 802.11b	DSSS	15.5	15.30	0.12	Left	Cheek	1	Standard	015D8	1	1:1	0.166	1.047	0.174	
2462	11	IEEE 802.11b	DSSS	15.5	15.30	0.12	Left	Tilt	1	Standard	015D8	1	1:1	0.090	1.047	0.094	
2462	11	IEEE 802.11b	DSSS	15.5	14.80	-0.05	Right	Cheek	2	Standard	01FC3	1	1:1	0.573	1.175	**0.673**	A7
2462	11	IEEE 802.11b	DSSS	15.5	14.80	0.02	Right	Cheek	2	Wireless Charging	01FC3	1	1:1	0.544	1.175	0.639	
2462	11	IEEE 802.11b	DSSS	15.5	14.80	0.07	Right	Tilt	2	Standard	01FC3	1	1:1	0.330	1.175	0.388	
2462	11	IEEE 802.11b	DSSS	15.5	14.80	0.05	Left	Cheek	2	Standard	01FC3	1	1:1	0.442	1.175	0.519	
2462	11	IEEE 802.11b	DSSS	15.5	14.80	0.08	Left	Tilt	2	Standard	01FC3	1	1:1	0.312	1.175	0.367	
2462	11	IEEE 802.11n	OFDM	15.5	15.34	-0.10	Right	Cheek	MIMO	Standard	01FC3	13	1:1	0.405	1.038	0.420	
2462	11	IEEE 802.11n	OFDM	15.5	15.34	-0.12	Right	Cheek	MIMO	Wireless Charging	01FC3	13	1:1	0.400	1.038	0.415	
2462	11	IEEE 802.11n	OFDM	15.5	15.34	0.09	Right	Tilt	MIMO	Standard	01FC3	13	1:1	0.301	1.038	0.312	
2462	11	IEEE 802.11n	OFDM	15.5	15.34	0.04	Left	Cheek	MIMO	Standard	01FC3	13	1:1	0.280	1.038	0.291	
2462	11	IEEE 802.11n	OFDM	15.5	15.34	0.16	Left	Tilt	MIMO	Standard	01FC3	13	1:1	0.183	1.038	0.190	
5825	165	IEEE 802.11a	OFDM	12.5	11.88	0.11	Right	Cheek	1	Standard	015D8	6	1:1	0.074	1.153	0.085	
5775	155	IEEE 802.11ac	OFDM	10.5	9.62	0.16	Right	Cheek	1	Standard	015D8	29.3	1:1	0.045	1.225	0.055	
5825	165	IEEE 802.11a	OFDM	12.5	11.88	0.17	Right	Tilt	1	Standard	015D8	6	1:1	0.038	1.153	0.044	
5825	165	IEEE 802.11a	OFDM	12.5	11.88	-0.15	Left	Cheek	1	Standard	015D8	6	1:1	0.035	1.153	0.040	
5825	165	IEEE 802.11a	OFDM	12.5	11.88	0.19	Left	Tilt	1	Standard	015D8	6	1:1	0.000	1.153	0.000	
5765	153	IEEE 802.11a	OFDM	12.5	12.41	-0.08	Right	Cheek	2	Standard	015D8	6	1:1	0.025	1.021	0.026	
5765	153	IEEE 802.11a	OFDM	12.5	12.41	0.16	Right	Tilt	2	Standard	015D8	6	1:1	0.034	1.021	0.035	
5765	153	IEEE 802.11a	OFDM	12.5	12.41	0.13	Left	Cheek	2	Standard	015D8	6	1:1	0.039	1.021	0.040	
5775	155	IEEE 802.11ac	OFDM	10.5	10.31	-0.12	Left	Cheek	2	Standard	015D8	29.3	1:1	0.012	1.045	0.013	
5765	153	IEEE 802.11a	OFDM	12.5	12.41	0.07	Left	Tilt	2	Standard	015D8	6	1:1	0.035	1.021	0.036	
5745	149	IEEE 802.11n	OFDM	15.5	14.85	0.12	Right	Cheek	MIMO	Standard	015D8	13	1:1	0.169	1.161	0.196	A8
5745	149	IEEE 802.11n	OFDM	15.5	14.85	0.14	Right	Tilt	MIMO	Standard	015D8	13	1:1	0.080	1.161	0.093	
5745	149	IEEE 802.11n	OFDM	15.5	14.85	-0.16	Left	Cheek	MIMO	Standard	015D8	13	1:1	0.029	1.161	0.034	
5745	149	IEEE 802.11n	OFDM	15.5	14.85	0.12	Left	Tilt	MIMO	Standard	015D8	13	1:1	0.029	1.161	0.034	
ANSI / IEEE C95.1 1992 - SAFETY LIMIT Spatial Peak Uncontrolled Exposure/General Population										Head 1.6 W/kg (mW/g) averaged over 1 gram							

© 2014 PCTEST Engineering Laboratory, Inc.

Table 11-8
NII Head SAR

MEASUREMENT RESULTS																	
FREQUENCY		Mode	Service	Maximum Allowed Power [dBm]	Conducted Power [dBm]	Power Drift [dB]	Side	Test Position	Antenna Config.	Cover Type	Device Serial Number	Data Rate (Mbps)	Duty Cycle	SAR (1g)	Scaling Factor	Scaled SAR (1g)	Plot #
MHz	Ch.													(W/kg)		(W/kg)	
5240	48	IEEE 802.11a	OFDM	12.5	11.59	-0.12	Right	Cheek	1	Standard	015D8	6	1:1	0.019	1.233	0.023	
5210	42	IEEE 802.11ac	OFDM	10.5	9.88	0.10	Right	Cheek	1	Standard	015D8	29.3	1:1	0.010	1.153	0.012	
5240	48	IEEE 802.11a	OFDM	12.5	11.59	0.16	Right	Tilt	1	Standard	015D8	6	1:1	0.007	1.233	0.009	
5240	48	IEEE 802.11a	OFDM	12.5	11.59	0.19	Left	Cheek	1	Standard	015D8	6	1:1	0.000	1.233	0.000	
5240	48	IEEE 802.11a	OFDM	12.5	11.59	0.10	Left	Tilt	1	Standard	015D8	6	1:1	0.000	1.233	0.000	
5320	64	IEEE 802.11a	OFDM	12.5	11.94	-0.14	Right	Cheek	1	Standard	015D8	6	1:1	0.015	1.138	0.017	
5290	58	IEEE 802.11ac	OFDM	10.5	9.96	-0.12	Right	Cheek	1	Standard	015D8	29.3	1:1	0.016	1.132	0.018	
5320	64	IEEE 802.11a	OFDM	12.5	11.94	0.14	Right	Tilt	1	Standard	015D8	6	1:1	0.011	1.138	0.013	
5320	64	IEEE 802.11a	OFDM	12.5	11.94	0.10	Left	Cheek	1	Standard	015D8	6	1:1	0.000	1.138	0.000	
5320	64	IEEE 802.11a	OFDM	12.5	11.94	0.19	Left	Tilt	1	Standard	015D8	6	1:1	0.000	1.138	0.000	
5580	116	IEEE 802.11a	OFDM	12.5	12.00	-0.03	Right	Cheek	1	Standard	015D8	6	1:1	0.086	1.122	0.096	
5530	106	IEEE 802.11ac	OFDM	10.5	9.92	0.13	Right	Cheek	1	Standard	015D8	29.3	1:1	0.033	1.143	0.038	
5580	116	IEEE 802.11a	OFDM	12.5	12.00	0.11	Right	Tilt	1	Standard	015D8	6	1:1	0.043	1.122	0.048	
5580	116	IEEE 802.11a	OFDM	12.5	12.00	0.12	Left	Cheek	1	Standard	015D8	6	1:1	0.035	1.122	0.039	
5580	116	IEEE 802.11a	OFDM	12.5	12.00	0.10	Left	Tilt	1	Standard	015D8	6	1:1	0.000	1.122	0.000	
5200	40	IEEE 802.11a	OFDM	12.5	11.92	0.16	Right	Cheek	2	Standard	015D8	6	1:1	0.096	1.143	0.110	
5200	40	IEEE 802.11a	OFDM	12.5	11.92	0.11	Right	Tilt	2	Standard	015D8	6	1:1	0.073	1.143	0.083	
5200	40	IEEE 802.11a	OFDM	12.5	11.92	0.13	Left	Cheek	2	Standard	015D8	6	1:1	0.139	1.143	0.159	
5200	40	IEEE 802.11a	OFDM	12.5	11.92	0.12	Left	Cheek	2	Wireless Charging	015D8	6	1:1	0.140	1.143	**0.160**	
5210	42	IEEE 802.11ac	OFDM	10.5	10.04	0.14	Left	Cheek	2	Standard	015D8	29.3	1:1	0.058	1.112	0.064	
5200	40	IEEE 802.11a	OFDM	12.5	11.92	0.13	Left	Tilt	2	Standard	015D8	6	1:1	0.118	1.143	0.135	
5260	52	IEEE 802.11a	OFDM	12.5	11.54	0.18	Right	Cheek	2	Standard	015D8	6	1:1	0.075	1.247	0.094	
5260	52	IEEE 802.11a	OFDM	12.5	11.54	0.14	Right	Tilt	2	Standard	015D8	6	1:1	0.062	1.247	0.077	
5260	52	IEEE 802.11a	OFDM	12.5	11.54	0.12	Left	Cheek	2	Standard	015D8	6	1:1	0.115	1.247	0.143	
5290	58	IEEE 802.11ac	OFDM	10.5	9.59	0.14	Left	Cheek	2	Standard	015D8	29.3	1:1	0.046	1.233	0.057	
5260	52	IEEE 802.11a	OFDM	12.5	11.54	-0.02	Left	Tilt	2	Standard	015D8	6	1:1	0.097	1.247	0.121	
5700	140	IEEE 802.11a	OFDM	12.5	11.92	-0.15	Right	Cheek	2	Standard	015D8	6	1:1	0.026	1.143	0.030	
5700	140	IEEE 802.11a	OFDM	12.5	11.92	0.15	Right	Tilt	2	Standard	015D8	6	1:1	0.037	1.143	0.042	
5700	140	IEEE 802.11a	OFDM	12.5	11.92	0.13	Left	Cheek	2	Standard	015D8	6	1:1	0.050	1.143	0.057	
5530	106	IEEE 802.11ac	OFDM	10.5	9.50	0.14	Left	Cheek	2	Standard	015D8	29.3	1:1	0.032	1.259	0.040	
5700	140	IEEE 802.11a	OFDM	12.5	11.92	0.16	Left	Tilt	2	Standard	015D8	6	1:1	0.046	1.143	0.053	
5180	36	IEEE 802.11n	OFDM	15.5	14.78	0.12	Right	Cheek	MIMO	Standard	015D8	13	1:1	0.011	1.180	0.013	
5180	36	IEEE 802.11n	OFDM	15.5	14.78	0.16	Right	Tilt	MIMO	Standard	015D8	13	1:1	0.005	1.180	0.006	
5180	36	IEEE 802.11n	OFDM	15.5	14.78	-0.19	Left	Cheek	MIMO	Standard	015D8	13	1:1	0.106	1.180	0.125	
5180	36	IEEE 802.11n	OFDM	15.5	14.78	0.17	Left	Tilt	MIMO	Standard	015D8	13	1:1	0.085	1.180	0.100	
5280	56	IEEE 802.11n	OFDM	15.5	14.67	0.21	Right	Cheek	MIMO	Standard	015D8	13	1:1	0.039	1.211	0.047	
5280	56	IEEE 802.11n	OFDM	15.5	14.67	0.12	Right	Tilt	MIMO	Standard	015D8	13	1:1	0.018	1.211	0.022	
5280	56	IEEE 802.11n	OFDM	15.5	14.67	0.10	Left	Cheek	MIMO	Standard	015D8	13	1:1	0.076	1.211	0.092	
5280	56	IEEE 802.11n	OFDM	15.5	14.67	0.10	Left	Tilt	MIMO	Standard	015D8	13	1:1	0.061	1.211	0.074	
5680	136	IEEE 802.11n	OFDM	15.5	14.80	0.13	Right	Cheek	MIMO	Standard	015D8	13	1:1	0.187	1.175	0.220	
5680	136	IEEE 802.11n	OFDM	15.5	14.80	0.08	Right	Cheek	MIMO	Wireless Charging	015D8	13	1:1	0.212	1.175	0.249	A9
5680	136	IEEE 802.11n	OFDM	15.5	14.80	0.16	Right	Tilt	MIMO	Standard	015D8	13	1:1	0.122	1.175	0.143	
5680	136	IEEE 802.11n	OFDM	15.5	14.80	-0.13	Left	Cheek	MIMO	Standard	015D8	13	1:1	0.035	1.175	0.041	
5680	136	IEEE 802.11n	OFDM	15.5	14.80	0.12	Left	Tilt	MIMO	Standard	015D8	13	1:1	0.037	1.175	0.043	
ANSI / IEEE C95.1 1992 - SAFETY LIMIT Spatial Peak Uncontrolled Exposure/General Population							**Head 1.6 W/kg (mW/g) averaged over 1 gram**										

© 2014 PCTEST Engineering Laboratory, Inc.

11.2 Standalone Body-Worn SAR Data

Table 11-9
CDMA Body-Worn SAR Data

MEASUREMENT RESULTS															
FREQUENCY		Mode	Service	Maximum Allowed Power [dBm]	Conducted Power [dBm]	Power Drift [dB]	Spacing	Cover Type	Device Serial Number	Duty Cycle	Side	SAR (1g)	Scaling Factor	Scaled SAR (1g)	Plot #
MHz	Ch.											(W/kg)		(W/kg)	
836.52	384	Cell. CDMA	TDSO / SO32	25.0	24.35	-0.03	15 mm	Standard	33ED6	1:1	back	0.439	1.161	0.510	A10
836.52	384	Cell. CDMA	TDSO / SO32	25.0	24.35	-0.04	15 mm	Wireless Charging	33ED6	1:1	back	0.327	1.161	0.380	
836.52	384	Cell. CDMA	TDSO / SO32	23.0	22.10	0.00	15 mm	Standard	33ED2	1:1	back	0.237	1.230	0.292	
1851.25	25	PCS CDMA	TDSO / SO32	25.0	24.42	-0.04	15 mm	Standard	33ED8	1:1	back	0.821	1.143	0.938	
1880.00	600	PCS CDMA	TDSO / SO32	25.0	24.42	-0.01	15 mm	Standard	33ED8	1:1	back	0.871	1.143	**0.996**	A12
1908.75	1175	PCS CDMA	TDSO / SO32	25.0	24.07	0.08	15 mm	Standard	33ED8	1:1	back	0.589	1.239	0.730	
1880.00	600	PCS CDMA	TDSO / SO32	25.0	24.42	-0.01	15 mm	Wireless Charging	33ED8	1:1	back	0.699	1.143	0.799	
1880.00	600	PCS CDMA	TDSO / SO32	23.0	22.20	0.08	15 mm	Standard	33ED2	1:1	back	0.144	1.202	0.173	
ANSI / IEEE C95.1 1992 - SAFETY LIMIT Spatial Peak Uncontrolled Exposure/General Population								**Body 1.6 W/kg (mW/g)** averaged over 1 gram							

Table 11-10
LTE Body-Worn SAR

MEASUREMENT RESULTS																				
FREQUENCY			Mode	Bandwidth [MHz]	Cover Type	Maximum Allowed Power [dBm]	Conducted Power [dBm]	Power Drift [dB]	MPR [dB]	Device Serial Number	Modulation	RB Size	RB Offset	Spacing	Side	Duty Cycle	SAR (1g)	Scaling Factor	Scaled SAR (1g)	Plot #
MHz	Ch.																(W/kg)		(W/kg)	
707.50	23095	Mid	LTE Band 12	10	Standard	24.0	23.08	-0.01	0	33EDD	QPSK	1	25	15 mm	back	1:1	0.120	1.236	0.148	A14
707.50	23095	Mid	LTE Band 12	10	Wireless Charging	24.0	23.08	-0.02	0	33EDD	QPSK	1	25	15 mm	back	1:1	0.092	1.236	0.114	
707.50	23095	Mid	LTE Band 12	10	Standard	23.0	22.09	-0.02	1	33EDD	QPSK	25	0	15 mm	back	1:1	0.096	1.233	0.118	
836.50	20525	Mid	LTE Band 5 (Cell)	10	Standard	24.5	24.46	-0.06	0	33EE3	QPSK	1	49	15 mm	back	1:1	0.135	1.009	0.136	A16
836.50	20525	Mid	LTE Band 5 (Cell)	10	Wireless Charging	24.5	24.46	-0.01	0	33EE3	QPSK	1	49	15 mm	back	1:1	0.123	1.009	0.124	
836.50	20525	Mid	LTE Band 5 (Cell)	10	Standard	23.5	23.08	0.00	1	33EE3	QPSK	25	0	15 mm	back	1:1	0.116	1.102	0.128	
1732.50	20175	Mid	LTE Band 4 (AWS)	20	Standard	24.0	23.64	-0.03	0	33ECE	QPSK	1	0	15 mm	back	1:1	0.128	1.086	0.139	A18
1732.50	20175	Mid	LTE Band 4 (AWS)	20	Wireless Charging	24.0	23.64	-0.02	0	33ECE	QPSK	1	0	15 mm	back	1:1	0.095	1.086	0.103	
1732.50	20175	Mid	LTE Band 4 (AWS)	20	Standard	23.0	22.51	0.00	1	33ECE	QPSK	50	0	15 mm	back	1:1	0.099	1.119	0.111	
1860.00	18700	Low	LTE Band 2 (PCS)	20	Standard	23.5	23.39	-0.04	0	33EDE	QPSK	1	99	15 mm	back	1:1	0.168	1.026	0.172	A20
1860.00	18700	Low	LTE Band 2 (PCS)	20	Wireless Charging	23.5	23.39	-0.01	0	33EDE	QPSK	1	99	15 mm	back	1:1	0.153	1.026	0.157	
1860.00	18700	Low	LTE Band 2 (PCS)	20	Standard	22.5	22.50	0.01	1	33EDE	QPSK	50	0	15 mm	back	1:1	0.148	1.000	0.148	
ANSI / IEEE C95.1 1992 - SAFETY LIMIT Spatial Peak Uncontrolled Exposure/General Population										**Body 1.6 W/kg (mW/g)** averaged over 1 gram										

Table 11-11
DTS Body-Worn SAR

MEASUREMENT RESULTS																	
FREQUENCY		Mode	Service	Maximum Allowed Power [dBm]	Conducted Power [dBm]	Power Drift [dB]	Spacing	Antenna Config.	Cover Type	Device Serial Number	Data Rate (Mbps)	Side	Duty Cycle	SAR (1g)	Scaling Factor	Scaled SAR (1g)	Plot #
MHz	Ch.													(W/kg)		(W/kg)	
2462	11	IEEE 802.11b	DSSS	15.5	15.30	0.06	10 mm	1	Standard	015D8	1	back	1:1	0.128	1.047	0.134	A22
2462	11	IEEE 802.11b	DSSS	15.5	15.30	0.18	10 mm	1	Wireless Charging	015D8	1	back	1:1	0.086	1.047	0.090	
2462	11	IEEE 802.11b	DSSS	15.5	14.80	0.08	10 mm	2	Standard	015D8	1	back	1:1	0.118	1.175	0.139	
2462	11	IEEE 802.11n	OFDM	15.5	15.34	0.19	10 mm	MIMO	Standard	015D8	13	back	1:1	0.060	1.038	0.062	
2462	11	IEEE 802.11n	OFDM	15.5	15.34	0.12	10 mm	MIMO	Wireless Charging	015D8	13	back	1:1	0.045	1.038	0.047	
5825	165	IEEE 802.11a	OFDM	12.5	11.88	0.15	10 mm	1	Standard	015D8	6	back	1:1	0.048	1.153	0.055	
5775	155	IEEE 802.11ac	OFDM	10.5	9.62	0.12	10 mm	1	Standard	015D8	29.3	back	1:1	0.030	1.225	0.037	
5765	153	IEEE 802.11a	OFDM	12.5	12.41	-0.13	10 mm	2	Standard	015D8	6	back	1:1	0.214	1.021	**0.218**	
5775	155	IEEE 802.11ac	OFDM	10.5	10.31	-0.12	10 mm	2	Standard	015D8	29.3	back	1:1	0.092	1.045	0.096	
5745	149	IEEE 802.11n	OFDM	15.5	14.85	-0.13	10 mm	MIMO	Standard	015D8	13	back	1:1	0.292	1.161	0.339	A23
ANSI / IEEE C95.1 1992 - SAFETY LIMIT Spatial Peak Uncontrolled Exposure/General Population								**Body 1.6 W/kg (mW/g)** averaged over 1 gram									

© 2014 PCTEST Engineering Laboratory, Inc.

Table 11-12
NII Body-Worn SAR

MEASUREMENT RESULTS																	
FREQUENCY		Mode	Service	Maximum Allowed Power [dBm]	Conducted Power [dBm]	Power Drift [dB]	Spacing	Antenna Config.	Cover Type	Device Serial Number	Data Rate (Mbps)	Side	Duty Cycle	SAR (1g)	Scaling Factor	Scaled SAR (1g)	Plot #
MHz	Ch.													(W/kg)		(W/kg)	
5240	48	IEEE 802.11a	OFDM	12.5	11.59	0.16	10 mm	1	Standard	015D8	6	back	1:1	0.022	1.233	0.027	
5210	42	IEEE 802.11ac	OFDM	10.5	9.88	0.15	10 mm	1	Standard	015D8	29.3	back	1:1	0.019	1.153	0.022	
5320	64	IEEE 802.11a	OFDM	12.5	11.94	0.10	10 mm	1	Standard	015D8	6	back	1:1	0.026	1.138	0.030	
5290	58	IEEE 802.11ac	OFDM	10.5	9.96	0.12	10 mm	1	Standard	015D8	29.3	back	1:1	0.018	1.132	0.020	
5580	116	IEEE 802.11a	OFDM	12.5	12.00	0.17	10 mm	1	Standard	015D8	6	back	1:1	0.046	1.122	0.052	
5530	106	IEEE 802.11ac	OFDM	10.5	9.92	0.16	10 mm	1	Standard	015D8	29.3	back	1:1	0.025	1.143	0.029	
5200	40	IEEE 802.11a	OFDM	12.5	11.92	-0.14	10 mm	2	Standard	015D8	6	back	1:1	0.092	1.143	0.105	
5210	42	IEEE 802.11ac	OFDM	10.5	10.04	-0.16	10 mm	2	Standard	015D8	29.3	back	1:1	0.059	1.112	0.066	
5260	52	IEEE 802.11a	OFDM	12.5	11.54	-0.04	10 mm	2	Standard	015D8	6	back	1:1	0.092	1.247	0.115	
5290	58	IEEE 802.11ac	OFDM	10.5	9.59	-0.13	10 mm	2	Standard	015D8	29.3	back	1:1	0.063	1.233	0.078	
5700	140	IEEE 802.11a	OFDM	12.5	11.92	-0.10	10 mm	2	Standard	015D8	6	back	1:1	0.272	1.143	0.311	
5700	140	IEEE 802.11a	OFDM	12.5	11.92	-0.12	10 mm	2	Wireless Charging	015D8	6	back	1:1	0.321	1.143	**0.367**	
5530	106	IEEE 802.11ac	OFDM	10.5	9.50	-0.19	10 mm	2	Standard	015D8	29.3	back	1:1	0.157	1.259	0.198	
5180	36	IEEE 802.11n	OFDM	15.5	14.78	-0.14	10 mm	MIMO	Standard	015D8	13	back	1:1	0.127	1.180	0.150	
5280	56	IEEE 802.11n	OFDM	15.5	14.67	-0.17	10 mm	MIMO	Standard	015D8	13	back	1:1	0.147	1.211	0.178	
5540	108	IEEE 802.11n	OFDM	15.5	14.62	-0.12	10 mm	MIMO	Standard	015D8	13	back	1:1	0.385	1.225	0.472	
5580	116	IEEE 802.11n	OFDM	15.5	14.75	-0.15	10 mm	MIMO	Standard	015D8	13	back	1:1	0.428	1.189	0.509	
5680	136	IEEE 802.11n	OFDM	15.5	14.80	-0.12	10 mm	MIMO	Standard	015D8	13	back	1:1	0.454	1.175	0.533	A25
5680	136	IEEE 802.11n	OFDM	15.5	14.80	-0.10	10 mm	MIMO	Wireless Charging	015D8	13	back	1:1	0.325	1.175	0.382	
ANSI / IEEE C95.1 1992 - SAFETY LIMIT Spatial Peak Uncontrolled Exposure/General Population					Body 1.6 W/kg (mW/g) averaged over 1 gram												

11.3 Standalone Wireless Router SAR Data

Table 11-13
CDMA/EVDO Hotspot SAR Data

MEASUREMENT RESULTS																
FREQUENCY		Mode	Service	Maximum Allowed Power [dBm]	Conducted Power [dBm]	Power Drift [dB]	Spacing	Cover Type	Device Serial Number	Duty Cycle	Side	SAR (1g)	Scaling Factor	Scaled SAR (1g)	Plot #
MHz	Ch.											(W/kg)		(W/kg)	
836.52	384	Cell. CDMA	TDSO / SO32	23.0	22.10	0.02	10 mm	Standard	33ED2	1:1	back	0.440	1.230	0.541	
836.52	384	Cell. CDMA	TDSO / SO32	23.0	22.10	-0.02	10 mm	Standard	33ED2	1:1	front	0.534	1.230	0.657	A11
836.52	384	Cell. CDMA	TDSO / SO32	23.0	22.10	0.00	10 mm	Wireless Charging	33ED2	1:1	front	0.433	1.230	0.533	
836.52	384	Cell. CDMA	TDSO / SO32	23.0	22.10	0.00	10 mm	Standard	33ED2	1:1	bottom	0.298	1.230	0.367	
836.52	384	Cell. CDMA	TDSO / SO32	23.0	22.10	-0.04	10 mm	Standard	33ED2	1:1	right	0.048	1.230	0.059	
836.52	384	Cell. CDMA	TDSO / SO32	23.0	22.10	0.00	10 mm	Standard	33ED2	1:1	left	0.152	1.230	0.187	
836.52	384	Cell. CDMA	EVDO Rev. 0	23.0	22.08	0.01	10 mm	Standard	33ED2	1:1	back	0.478	1.236	0.591	
836.52	384	Cell. CDMA	EVDO Rev. 0	23.0	22.08	0.01	10 mm	Wireless Charging	33ED2	1:1	back	0.381	1.236	0.471	
836.52	384	Cell. CDMA	EVDO Rev. 0	23.0	22.08	-0.04	10 mm	Standard	33ED2	1:1	front	0.477	1.236	0.590	
836.52	384	Cell. CDMA	EVDO Rev. 0	23.0	22.08	-0.10	10 mm	Standard	33ED2	1:1	bottom	0.290	1.236	0.358	
836.52	384	Cell. CDMA	EVDO Rev. 0	23.0	22.08	0.02	10 mm	Standard	33ED2	1:1	right	0.039	1.236	0.048	
836.52	384	Cell. CDMA	EVDO Rev. 0	23.0	22.08	-0.04	10 mm	Standard	33ED2	1:1	left	0.143	1.236	0.177	
1880.00	600	PCS CDMA	TDSO / SO32	23.0	22.20	-0.04	10 mm	Standard	33ED2	1:1	back	0.259	1.202	0.311	
1880.00	600	PCS CDMA	TDSO / SO32	23.0	22.20	-0.04	10 mm	Standard	33ED2	1:1	front	0.279	1.202	0.335	
1880.00	600	PCS CDMA	TDSO / SO32	23.0	22.20	-0.12	10 mm	Wireless Charging	33ED2	1:1	front	0.299	1.202	0.359	
1880.00	600	PCS CDMA	TDSO / SO32	23.0	22.20	-0.03	10 mm	Standard	33ED2	1:1	bottom	0.262	1.202	0.315	
1880.00	600	PCS CDMA	TDSO / SO32	23.0	22.20	-0.18	10 mm	Standard	33ED2	1:1	right	0.027	1.202	0.032	
1880.00	600	PCS CDMA	TDSO / SO32	23.0	22.20	-0.04	10 mm	Standard	33ED2	1:1	left	0.040	1.202	0.048	
1880.00	600	PCS CDMA	EVDO Rev. 0	23.0	22.08	-0.19	10 mm	Standard	33ED2	1:1	back	0.299	1.236	0.370	
1880.00	600	PCS CDMA	EVDO Rev. 0	23.0	22.08	0.06	10 mm	Standard	33ED2	1:1	front	0.384	1.236	0.475	
1880.00	600	PCS CDMA	EVDO Rev. 0	23.0	22.08	0.06	10 mm	Standard	33ED2	1:1	bottom	0.389	1.236	0.481	
1880.00	600	PCS CDMA	EVDO Rev. 0	23.0	22.08	-0.03	10 mm	Wireless Charging	33ED2	1:1	bottom	0.399	1.236	0.493	A13
1880.00	600	PCS CDMA	EVDO Rev. 0	23.0	22.08	0.16	10 mm	Standard	33ED2	1:1	right	0.032	1.236	0.040	
1880.00	600	PCS CDMA	EVDO Rev. 0	23.0	22.08	0.03	10 mm	Standard	33ED2	1:1	left	0.057	1.236	0.070	
ANSI / IEEE C95.1 1992 - SAFETY LIMIT Spatial Peak Uncontrolled Exposure/General Population					Body 1.6 W/kg (mW/g) averaged over 1 gram										

© 2014 PCTEST Engineering Laboratory, Inc.

Table 11-14
LTE Band 12 Hotspot SAR

MEASUREMENT RESULTS																					
FREQUENCY			Mode	Bandwidth [MHz]	Cover Type	Maximum Allowed Power [dBm]	Conducted Power [dBm]	Power Drift [dB]	MPR [dB]	Device Serial Number	Modulation	RB Size	RB Offset	Spacing	Side	Duty Cycle	SAR (1g) (W/kg)	Scaling Factor	Scaled SAR (1g) (W/kg)	Plot #
MHz	Ch.																			
707.50	23095	Mid	LTE Band 12	10	Standard	24.0	23.08	0.04	0	33EDD	QPSK	1	25	10 mm	back	1:1	0.132	1.236	0.163	
707.50	23095	Mid	LTE Band 12	10	Standard	23.0	22.09	-0.10	1	33EDD	QPSK	25	0	10 mm	back	1:1	0.096	1.233	0.118	
707.50	23095	Mid	LTE Band 12	10	Standard	24.0	23.08	0.02	0	33EDD	QPSK	1	25	10 mm	front	1:1	0.170	1.236	0.210	
707.50	23095	Mid	LTE Band 12	10	Standard	23.0	22.09	-0.01	1	33EDD	QPSK	25	0	10 mm	front	1:1	0.122	1.233	0.150	
707.50	23095	Mid	LTE Band 12	10	Standard	24.0	23.08	-0.04	0	33EDD	QPSK	1	25	10 mm	bottom	1:1	0.103	1.236	0.127	
707.50	23095	Mid	LTE Band 12	10	Standard	23.0	22.09	-0.03	1	33EDD	QPSK	25	0	10 mm	bottom	1:1	0.079	1.233	0.097	
707.50	23095	Mid	LTE Band 12	10	Standard	24.0	23.08	-0.03	0	33EDD	QPSK	1	25	10 mm	right	1:1	0.221	1.236	0.273	
707.50	23095	Mid	LTE Band 12	10	Wireless Charging	24.0	23.08	0.04	0	33EDD	QPSK	1	25	10 mm	right	1:1	0.233	1.236	0.288	A15
707.50	23095	Mid	LTE Band 12	10	Standard	23.0	22.09	-0.01	1	33EDD	QPSK	25	0	10 mm	right	1:1	0.185	1.233	0.228	
707.50	23095	Mid	LTE Band 12	10	Standard	24.0	23.08	0.13	0	33EDD	QPSK	1	25	10 mm	left	1:1	0.069	1.236	0.085	
707.50	23095	Mid	LTE Band 12	10	Standard	23.0	22.09	-0.01	1	33EDD	QPSK	25	0	10 mm	left	1:1	0.059	1.233	0.073	
ANSI / IEEE C95.1 1992 - SAFETY LIMIT Spatial Peak Uncontrolled Exposure/General Population										Body 1.6 W/kg (mW/g) averaged over 1 gram										

Table 11-15
LTE Band 5 (Cell) Hotspot SAR

MEASUREMENT RESULTS																					
FREQUENCY			Mode	Bandwidth [MHz]	Cover Type	Maximum Allowed Power [dBm]	Conducted Power [dBm]	Power Drift [dB]	MPR [dB]	Device Serial Number	Modulation	RB Size	RB Offset	Spacing	Side	Duty Cycle	SAR (1g) (W/kg)	Scaling Factor	Scaled SAR (1g) (W/kg)	Plot #
MHz	Ch.																			
836.50	20525	Mid	LTE Band 5 (Cell)	10	Standard	24.5	24.46	0.00	0	33EE3	QPSK	1	49	10 mm	back	1:1	0.239	1.009	0.241	
836.50	20525	Mid	LTE Band 5 (Cell)	10	Standard	23.5	23.08	0.00	1	33EE3	QPSK	25	0	10 mm	back	1:1	0.208	1.102	0.229	
836.50	20525	Mid	LTE Band 5 (Cell)	10	Standard	24.5	24.46	0.06	0	33EE3	QPSK	1	49	10 mm	front	1:1	0.289	1.009	0.292	
836.50	20525	Mid	LTE Band 5 (Cell)	10	Standard	23.5	23.08	-0.16	1	33EE3	QPSK	25	0	10 mm	front	1:1	0.266	1.102	0.293	
836.50	20525	Mid	LTE Band 5 (Cell)	10	Standard	24.5	24.46	-0.08	0	33EE3	QPSK	1	49	10 mm	bottom	1:1	0.171	1.009	0.173	
836.50	20525	Mid	LTE Band 5 (Cell)	10	Standard	23.5	23.08	0.01	1	33EE3	QPSK	25	0	10 mm	bottom	1:1	0.153	1.102	0.169	
836.50	20525	Mid	LTE Band 5 (Cell)	10	Standard	24.5	24.46	0.02	0	33EE3	QPSK	1	49	10 mm	right	1:1	0.342	1.009	0.345	
836.50	20525	Mid	LTE Band 5 (Cell)	10	Wireless Charging	24.5	24.46	0.01	0	33EE3	QPSK	1	49	10 mm	right	1:1	0.343	1.009	0.346	A17
836.50	20525	Mid	LTE Band 5 (Cell)	10	Standard	23.5	23.08	-0.01	1	33EE3	QPSK	25	0	10 mm	right	1:1	0.301	1.102	0.332	
836.50	20525	Mid	LTE Band 5 (Cell)	10	Standard	24.5	24.46	-0.02	0	33EE3	QPSK	1	49	10 mm	left	1:1	0.111	1.009	0.112	
836.50	20525	Mid	LTE Band 5 (Cell)	10	Standard	23.5	23.08	0.02	1	33EE3	QPSK	25	0	10 mm	left	1:1	0.112	1.102	0.123	
ANSI / IEEE C95.1 1992 - SAFETY LIMIT Spatial Peak Uncontrolled Exposure/General Population										Body 1.6 W/kg (mW/g) averaged over 1 gram										

Table 11-16
LTE Band 4 (AWS) Hotspot SAR

MEASUREMENT RESULTS																					
FREQUENCY			Mode	Bandwidth [MHz]	Cover Type	Maximum Allowed Power [dBm]	Conducted Power [dBm]	Power Drift [dB]	MPR [dB]	Device Serial Number	Modulation	RB Size	RB Offset	Spacing	Side	Duty Cycle	SAR (1g) (W/kg)	Scaling Factor	Scaled SAR (1g) (W/kg)	Plot #
MHz	Ch.																			
1732.50	20175	Mid	LTE Band 4 (AWS)	20	Standard	24.0	23.64	-0.06	0	33ECE	QPSK	1	0	10 mm	back	1:1	0.223	1.086	0.242	
1732.50	20175	Mid	LTE Band 4 (AWS)	20	Standard	23.0	22.51	-0.04	1	33ECE	QPSK	50	0	10 mm	back	1:1	0.179	1.119	0.200	
1732.50	20175	Mid	LTE Band 4 (AWS)	20	Standard	24.0	23.64	0.04	0	33ECE	QPSK	1	0	10 mm	front	1:1	0.411	1.086	0.446	
1732.50	20175	Mid	LTE Band 4 (AWS)	20	Standard	23.0	22.51	0.03	1	33ECE	QPSK	50	0	10 mm	front	1:1	0.333	1.119	0.373	
1732.50	20175	Mid	LTE Band 4 (AWS)	20	Standard	24.0	23.64	-0.13	0	33ECE	QPSK	1	0	10 mm	bottom	1:1	0.243	1.086	0.264	
1732.50	20175	Mid	LTE Band 4 (AWS)	20	Standard	23.0	22.51	-0.01	1	33ECE	QPSK	50	0	10 mm	bottom	1:1	0.191	1.119	0.214	
1732.50	20175	Mid	LTE Band 4 (AWS)	20	Standard	24.0	23.64	-0.03	0	33ECE	QPSK	1	0	10 mm	right	1:1	0.431	1.086	0.468	A19
1732.50	20175	Mid	LTE Band 4 (AWS)	20	Wireless Charging	24.0	23.64	-0.09	0	33ECE	QPSK	1	0	10 mm	right	1:1	0.407	1.086	0.442	
1732.50	20175	Mid	LTE Band 4 (AWS)	20	Standard	23.0	22.51	-0.08	1	33ECE	QPSK	50	0	10 mm	right	1:1	0.339	1.119	0.379	
1732.50	20175	Mid	LTE Band 4 (AWS)	20	Standard	24.0	23.64	-0.14	0	33ECE	QPSK	1	0	10 mm	left	1:1	0.023	1.086	0.025	
1732.50	20175	Mid	LTE Band 4 (AWS)	20	Standard	23.0	22.51	0.01	1	33ECE	QPSK	50	0	10 mm	left	1:1	0.019	1.119	0.021	
ANSI / IEEE C95.1 1992 - SAFETY LIMIT Spatial Peak Uncontrolled Exposure/General Population										Body 1.6 W/kg (mW/g) averaged over 1 gram										

© 2014 PCTEST Engineering Laboratory, Inc.

Table 11-17
LTE Band 2 (PCS) Hotspot SAR

MEASUREMENT RESULTS																				
FREQUENCY			Mode	Bandwidth [MHz]	Cover Type	Maximum Allowed Power [dBm]	Conducted Power [dBm]	Power Drift [dB]	MPR [dB]	Device Serial Number	Modulation	RB Size	RB Offset	Spacing	Side	Duty Cycle	SAR (1g)	Scaling Factor	Scaled SAR (1g)	Plot #
MHz	Ch.																(W/kg)		(W/kg)	
1860.00	18700	Low	LTE Band 2 (PCS)	20	Standard	23.5	23.39	0.02	0	33EDE	QPSK	1	99	10 mm	back	1:1	0.387	1.026	0.397	
1860.00	18700	Low	LTE Band 2 (PCS)	20	Standard	22.5	22.50	-0.01	1	33EDE	QPSK	50	0	10 mm	back	1:1	0.345	1.000	0.345	
1860.00	18700	Low	LTE Band 2 (PCS)	20	Standard	23.5	23.39	0.03	0	33EDE	QPSK	1	99	10 mm	front	1:1	0.506	1.026	0.519	
1860.00	18700	Low	LTE Band 2 (PCS)	20	Standard	22.5	22.50	-0.01	1	33EDE	QPSK	50	0	10 mm	front	1:1	0.475	1.000	0.475	
1860.00	18700	Low	LTE Band 2 (PCS)	20	Standard	23.5	23.39	0.01	0	33EDE	QPSK	1	99	10 mm	bottom	1:1	0.460	1.026	0.472	
1860.00	18700	Low	LTE Band 2 (PCS)	20	Standard	22.5	22.50	0.02	1	33EDE	QPSK	50	0	10 mm	bottom	1:1	0.425	1.000	0.425	
1860.00	18700	Low	LTE Band 2 (PCS)	20	Standard	23.5	23.39	-0.02	0	33EDE	QPSK	1	99	10 mm	right	1:1	0.917	1.026	0.941	
1880.00	18900	Mid	LTE Band 2 (PCS)	20	Standard	23.5	23.22	0.00	0	33EDE	QPSK	1	99	10 mm	right	1:1	0.999	1.067	1.066	A21
1880.00	18900	Mid	LTE Band 2 (PCS)	20	Wireless Charging	23.5	23.22	-0.01	0	33EDE	QPSK	1	99	10 mm	right	1:1	0.984	1.067	1.050	
1900.00	19100	High	LTE Band 2 (PCS)	20	Standard	23.5	23.35	-0.01	0	33EDE	QPSK	1	0	10 mm	right	1:1	0.962	1.035	0.996	
1860.00	18700	Low	LTE Band 2 (PCS)	20	Standard	22.5	22.50	-0.15	1	33EDE	QPSK	50	0	10 mm	right	1:1	0.729	1.000	0.729	
1860.00	18700	Low	LTE Band 2 (PCS)	20	Standard	22.5	22.48	-0.09	1	33EDE	QPSK	100	0	10 mm	right	1:1	0.768	1.005	0.772	
1860.00	18700	Low	LTE Band 2 (PCS)	20	Standard	23.5	23.39	0.16	0	33EDE	QPSK	1	99	10 mm	left	1:1	0.043	1.026	0.044	
1860.00	18700	Low	LTE Band 2 (PCS)	20	Standard	22.5	22.50	0.09	1	33EDE	QPSK	50	0	10 mm	left	1:1	0.030	1.000	0.030	
1880.00	18900	Mid	LTE Band 2 (PCS)	20	Standard	23.5	23.22	-0.12	0	33EDE	QPSK	1	99	10 mm	right	1:1	0.990	1.067	1.056	
ANSI / IEEE C95.1 1992 - SAFETY LIMIT Spatial Peak Uncontrolled Exposure/General Population															Body 1.6 W/kg (mW/g) averaged over 1 gram					

Note: Variability data is highlighted blue in the table above.

Table 11-18
WLAN Hotspot SAR

MEASUREMENT RESULTS																	
FREQUENCY		Mode	Service	Maximum Allowed Power [dBm]	Conducted Power [dBm]	Power Drift [dB]	Spacing	Antenna Config.	Cover Type	Device Serial Number	Data Rate (Mbps)	Side	Duty Cycle	SAR (1g)	Scaling Factor	Scaled SAR (1g)	Plot #
MHz	Ch.													(W/kg)		(W/kg)	
2462	11	IEEE 802.11b	DSSS	15.5	15.30	0.06	10 mm	1	Standard	015D8	1	back	1:1	0.128	1.047	0.134	A22
2462	11	IEEE 802.11b	DSSS	15.5	15.30	0.18	10 mm	1	Wireless Charging	015D8	1	back	1:1	0.086	1.047	0.090	
2462	11	IEEE 802.11b	DSSS	15.5	15.30	-0.09	10 mm	1	Standard	015D8	1	front	1:1	0.067	1.047	0.070	
2462	11	IEEE 802.11b	DSSS	15.5	15.30	0.10	10 mm	1	Standard	015D8	1	top	1:1	0.025	1.047	0.026	
2462	11	IEEE 802.11b	DSSS	15.5	15.30	0.12	10 mm	1	Standard	015D8	1	left	1:1	0.046	1.047	0.048	
2462	11	IEEE 802.11b	DSSS	15.5	14.80	0.08	10 mm	2	Standard	015D8	1	back	1:1	0.118	1.175	0.139	
2462	11	IEEE 802.11b	DSSS	15.5	14.80	-0.15	10 mm	2	Standard	015D8	1	front	1:1	0.064	1.175	0.075	
2462	11	IEEE 802.11b	DSSS	15.5	14.80	-0.12	10 mm	2	Standard	015D8	1	top	1:1	0.052	1.175	0.061	
2462	11	IEEE 802.11n	OFDM	15.5	15.34	0.19	10 mm	MIMO	Standard	015D8	13	back	1:1	0.060	1.038	0.062	
2462	11	IEEE 802.11n	OFDM	15.5	15.34	0.12	10 mm	MIMO	Wireless Charging	015D8	13	back	1:1	0.045	1.038	0.047	
2462	11	IEEE 802.11n	OFDM	15.5	15.34	0.12	10 mm	MIMO	Standard	015D8	13	front	1:1	0.038	1.038	0.039	
2462	11	IEEE 802.11n	OFDM	15.5	15.34	0.18	10 mm	MIMO	Standard	015D8	13	top	1:1	0.018	1.038	0.019	
2462	11	IEEE 802.11n	OFDM	15.5	15.34	0.13	10 mm	MIMO	Standard	015D8	13	left	1:1	0.017	1.038	0.018	
5825	165	IEEE 802.11a	OFDM	12.5	11.88	0.15	10 mm	1	Standard	015D8	6	back	1:1	0.048	1.153	0.055	
5775	155	IEEE 802.11ac	OFDM	10.5	9.62	0.12	10 mm	1	Standard	015D8	29.3	back	1:1	0.030	1.225	0.037	
5825	165	IEEE 802.11a	OFDM	12.5	11.88	0.12	10 mm	1	Standard	015D8	6	front	1:1	0.011	1.153	0.013	
5825	165	IEEE 802.11a	OFDM	12.5	11.88	0.13	10 mm	1	Standard	015D8	6	top	1:1	0.020	1.153	0.023	
5825	165	IEEE 802.11a	OFDM	12.5	11.88	0.14	10 mm	1	Standard	015D8	6	left	1:1	0.022	1.153	0.025	
5765	153	IEEE 802.11a	OFDM	12.5	12.41	-0.13	10 mm	2	Standard	015D8	6	back	1:1	0.214	1.021	0.218	
5765	153	IEEE 802.11a	OFDM	12.5	12.41	-0.13	10 mm	2	Wireless Charging	015D8	6	back	1:1	0.453	1.021	0.463	
5775	155	IEEE 802.11ac	OFDM	10.5	10.31	-0.12	10 mm	2	Standard	015D8	29.3	back	1:1	0.092	1.045	0.096	
5765	153	IEEE 802.11a	OFDM	12.5	12.41	-0.15	10 mm	2	Standard	015D8	6	front	1:1	0.030	1.021	0.031	
5765	153	IEEE 802.11a	OFDM	12.5	12.41	0.12	10 mm	2	Standard	015D8	6	top	1:1	0.058	1.021	0.059	
5745	149	IEEE 802.11n	OFDM	15.5	14.85	-0.13	10 mm	MIMO	Standard	015D8	13	back	1:1	0.292	1.161	0.339	
5745	149	IEEE 802.11n	OFDM	15.5	14.85	0.14	10 mm	MIMO	Wireless Charging	015D8	13	back	1:1	0.482	1.161	0.560	A24
5745	149	IEEE 802.11n	OFDM	15.5	14.85	-0.15	10 mm	MIMO	Standard	015D8	13	front	1:1	0.023	1.161	0.027	
5745	149	IEEE 802.11n	OFDM	15.5	14.85	-0.13	10 mm	MIMO	Standard	015D8	13	top	1:1	0.136	1.161	0.158	
5745	149	IEEE 802.11n	OFDM	15.5	14.85	0.19	10 mm	MIMO	Standard	015D8	13	left	1:1	0.076	1.161	0.088	
ANSI / IEEE C95.1 1992 - SAFETY LIMIT Spatial Peak Uncontrolled Exposure/General Population									Body 1.6 W/kg (mW/g) averaged over 1 gram								

© 2014 PCTEST Engineering Laboratory, Inc.

11.4 Standalone Extremity SAR Data

Table 11-19
WLAN Extremity SAR

MEASUREMENT RESULTS																	
FREQUENCY		Mode	Service	Maximum Allowed Power [dBm]	Conducted Power [dBm]	Power Drift [dB]	Spacing	Antenna Config.	Cover Type	Device Serial Number	Data Rate (Mbps)	Side	Duty Cycle	SAR (10g)	Scaling Factor	Scaled SAR (10g)	Plot #
MHz	Ch.													(W/kg)		(W/kg)	
5240	48	IEEE 802.11a	OFDM	12.5	11.59	0.12	0 mm	1	Standard	015D7	6	back	1:1	0.100	1.233	0.123	
5210	42	IEEE 802.11ac	OFDM	10.5	9.88	0.12	0 mm	1	Standard	015D7	29.3	back	1:1	0.069	1.153	0.080	
5240	48	IEEE 802.11a	OFDM	12.5	11.59	0.12	0 mm	1	Standard	015D7	6	front	1:1	0.042	1.233	0.052	
5240	48	IEEE 802.11a	OFDM	12.5	11.59	0.19	0 mm	1	Standard	015D7	6	top	1:1	0.029	1.233	0.036	
5240	48	IEEE 802.11a	OFDM	12.5	11.59	-0.17	0 mm	1	Standard	015D7	6	left	1:1	0.058	1.233	0.072	
5320	64	IEEE 802.11a	OFDM	12.5	11.94	0.06	0 mm	1	Standard	015D7	6	back	1:1	0.105	1.138	0.119	
5290	58	IEEE 802.11ac	OFDM	10.5	9.96	0.13	0 mm	1	Standard	015D7	29.3	back	1:1	0.057	1.132	0.065	
5320	64	IEEE 802.11a	OFDM	12.5	11.94	0.16	0 mm	1	Standard	015D7	6	front	1:1	0.046	1.138	0.052	
5320	64	IEEE 802.11a	OFDM	12.5	11.94	0.14	0 mm	1	Standard	015D7	6	top	1:1	0.005	1.138	0.006	
5320	64	IEEE 802.11a	OFDM	12.5	11.94	-0.03	0 mm	1	Standard	015D7	6	left	1:1	0.099	1.138	0.113	
5580	116	IEEE 802.11a	OFDM	12.5	12.00	0.04	0 mm	1	Standard	015D7	6	back	1:1	0.136	1.122	0.153	
5580	116	IEEE 802.11a	OFDM	12.5	12.00	0.16	0 mm	1	Standard	015D7	6	front	1:1	0.046	1.122	0.052	
5580	116	IEEE 802.11a	OFDM	12.5	12.00	0.10	0 mm	1	Standard	015D7	6	top	1:1	0.004	1.122	0.004	
5580	116	IEEE 802.11a	OFDM	12.5	12.00	-0.13	0 mm	1	Standard	015D7	6	left	1:1	0.194	1.122	0.218	
5530	106	IEEE 802.11ac	OFDM	10.5	9.92	0.14	0 mm	1	Standard	015D7	29.3	left	1:1	0.191	1.143	0.218	
5200	40	IEEE 802.11a	OFDM	12.5	11.92	0.08	0 mm	2	Standard	015D7	6	back	1:1	0.305	1.143	0.349	
5210	42	IEEE 802.11ac	OFDM	10.5	10.04	-0.12	0 mm	2	Standard	015D7	29.3	back	1:1	0.176	1.112	0.196	
5200	40	IEEE 802.11a	OFDM	12.5	11.92	0.16	0 mm	2	Standard	015D7	6	front	1:1	0.068	1.143	0.078	
5200	40	IEEE 802.11a	OFDM	12.5	11.92	-0.02	0 mm	2	Standard	015D7	6	top	1:1	0.106	1.143	0.121	
5260	52	IEEE 802.11a	OFDM	12.5	11.54	-0.10	0 mm	2	Standard	015D7	6	back	1:1	0.297	1.247	0.370	
5290	58	IEEE 802.11ac	OFDM	10.5	9.59	-0.18	0 mm	2	Standard	015D7	29.3	back	1:1	0.164	1.233	0.202	
5260	52	IEEE 802.11a	OFDM	12.5	11.54	0.17	0 mm	2	Standard	015D7	6	front	1:1	0.050	1.247	0.062	
5260	52	IEEE 802.11a	OFDM	12.5	11.54	0.14	0 mm	2	Standard	015D7	6	top	1:1	0.099	1.247	0.123	
5700	140	IEEE 802.11a	OFDM	12.5	11.92	0.15	0 mm	2	Standard	015D7	6	back	1:1	0.595	1.143	**0.680**	A26
5700	140	IEEE 802.11a	OFDM	12.5	11.92	-0.13	0 mm	2	Wireless Charging	015D7	6	back	1:1	0.500	1.143	0.572	
5530	106	IEEE 802.11ac	OFDM	10.5	9.50	-0.12	0 mm	2	Standard	015D7	29.3	back	1:1	0.225	1.259	0.283	
5700	140	IEEE 802.11a	OFDM	12.5	11.92	0.16	0 mm	2	Standard	015D7	6	front	1:1	0.047	1.143	0.054	
5700	140	IEEE 802.11a	OFDM	12.5	11.92	0.20	0 mm	2	Standard	015D7	6	top	1:1	0.136	1.143	0.155	
5180	36	IEEE 802.11n	OFDM	15.5	14.78	0.12	0 mm	MIMO	Standard	015D7	13	back	1:1	0.304	1.180	0.359	
5180	36	IEEE 802.11n	OFDM	15.5	14.78	0.03	0 mm	MIMO	Wireless Charging	015D7	13	back	1:1	0.243	1.180	0.287	
5180	36	IEEE 802.11n	OFDM	15.5	14.78	0.12	0 mm	MIMO	Standard	015D7	13	front	1:1	0.096	1.180	0.113	
5180	36	IEEE 802.11n	OFDM	15.5	14.78	0.05	0 mm	MIMO	Standard	015D7	13	top	1:1	0.102	1.180	0.120	
5180	36	IEEE 802.11n	OFDM	15.5	14.78	-0.02	0 mm	MIMO	Standard	015D7	13	left	1:1	0.066	1.180	0.078	
5280	56	IEEE 802.11n	OFDM	15.5	14.67	0.12	0 mm	MIMO	Standard	015D7	13	back	1:1	0.303	1.211	0.367	
5280	56	IEEE 802.11n	OFDM	15.5	14.67	0.13	0 mm	MIMO	Standard	015D7	13	front	1:1	0.072	1.211	0.087	
5280	56	IEEE 802.11n	OFDM	15.5	14.67	0.13	0 mm	MIMO	Standard	015D7	13	top	1:1	0.090	1.211	0.109	
5280	56	IEEE 802.11n	OFDM	15.5	14.67	0.14	0 mm	MIMO	Standard	015D7	13	left	1:1	0.084	1.211	0.102	
5680	136	IEEE 802.11n	OFDM	15.5	14.80	0.18	0 mm	MIMO	Standard	015D7	13	back	1:1	0.285	1.175	0.335	
5680	136	IEEE 802.11n	OFDM	15.5	14.80	0.12	0 mm	MIMO	Standard	015D7	13	front	1:1	0.070	1.175	0.082	
5680	136	IEEE 802.11n	OFDM	15.5	14.80	0.15	0 mm	MIMO	Standard	015D7	13	top	1:1	0.134	1.175	0.157	
5680	136	IEEE 802.11n	OFDM	15.5	14.80	0.15	0 mm	MIMO	Standard	015D7	13	left	1:1	0.181	1.175	0.213	
ANSI / IEEE C95.1 1992 - SAFETY LIMIT Spatial Peak Uncontrolled Exposure/General Population					Hand 4.0 W/kg (mW/g) averaged over 10 grams												

© 2014 PCTEST Engineering Laboratory, Inc.

11.5 SAR Test Notes

General Notes:

1. The test data reported are the worst-case SAR values according to test procedures specified in IEEE 1528-2003, and FCC KDB Publication 447498 D01v05.
2. Batteries are fully charged at the beginning of the SAR measurements. A specialized battery with NFC antenna was used for all SAR measurements.
3. Liquid tissue depth was at least 15.0 cm for all frequencies.
4. The manufacturer has confirmed that the device(s) tested have the same physical, mechanical and thermal characteristics and are within operational tolerances expected for production units.
5. SAR results were scaled to the maximum allowed power to demonstrate compliance per FCC KDB Publication 447498 D01v05.
6. Device was tested using a fixed spacing for body-worn accessory testing. A separation distance of 15 mm was considered because the manufacturer has determined that there will be body-worn accessories available in the marketplace for users to support this separation distance. A test separation distance of 10 mm for body-worn SAR was also used for 2.4/5 GHz WLAN as it is more conservative.
7. Per FCC KDB Publication 648474 D04v01, body-worn SAR was evaluated without a headset connected to the device. Since the standalone reported body-worn SAR was ≤ 1.2 W/kg, no additional body-worn SAR evaluations using a headset cable were required.
8. Per FCC KDB 865664 D01 v01, variability SAR tests were performed when the measured SAR results for a frequency band were greater than 0.8 W/kg. Variability SAR tests were not performed for Extremity SAR since the measured 10 gram SAR for a frequency band was less than 2.0 W/kg. Repeated SAR measurements are highlighted in the tables above for clarity. Please see Section 13 for variability analysis.
9. During SAR Testing for the Wireless Router conditions per FCC KDB Publication 941225 D06v01, the actual Portable Hotspot operation (with actual simultaneous transmission of a transmitter with WIFI) was not activated (See Section 0 for more details).
10. Per FCC KDB Publication 648474 D03, SAR was measured using the standard battery cover and then repeated with the wireless charging battery cover for the configuration with the highest measured SAR for each wireless technology, frequency band, operating mode, and exposure condition. Since reported SAR did not exceed 1.2 W/kg, additional testing with the wireless charging battery cover was not required.
11. Per FCC KDB Publication 648474 D04v01r01, this device is considered a "phablet" since the diagonal dimension is > 160 mm and < 200 mm. Therefore, extremity SAR tests are required when wireless router mode does not apply or if wireless router 1g SAR > 1.2 W/kg when scaled up to the maximum output power tolerances.

CDMA Notes:

1. Head SAR for CDMA2000 mode was tested under RC3/SO55 per FCC KDB Publication 941225 D01v02.
2. Body-Worn SAR was tested with 1x RTT with TDSO / SO32 FCH Only. EVDO and TDSO / SO32 FCH+SCH SAR tests were not required since the average output power was not more than 0.25 dB higher than the TDSO / SO32 FCH only powers, per FCC KDB Publication 941225 D01v02.
3. CDMA Wireless Router SAR is measured using Subtype 0/1 Physical Layer configurations for Rev. 0 according to KDB 941225 D01 procedures for data devices. Since the average output power of Subtype 2 for Rev. A is less than the Rev. 0 power levels, EVDO Rev. A SAR is not required. SAR is not required for 1x RTT for Ev-Do hotspot devices when the maximum average output of each channel is less than 1⁄4 dB higher than that measured in Subtype 0/1 Physical Layer configurations for Rev. 0.
4. Head SAR was additionally evaluated using EVDO Rev. A to determine compliance for VoIP operations.
5. Per FCC KDB Publication 447498 D01v05, if the reported (scaled) SAR measured at the middle channel or highest output power channel for each test configuration is ≤ 0.8 W/kg then testing at

© 2014 PCTEST Engineering Laboratory, Inc.

the other channels is not required for such test configuration(s). When the maximum output power variation across the required test channels is > ½ dB, instead of the middle channel, the highest output power channel was used.

6. CDMA 1x-RTT SAR was required to be evaluated for Hotspot exposure conditions to support simultaneous transmission capabilities.
7. This device applies power reduction for Cellular and PCS CDMA/EVDO modes when Hotspot is ON. Therefore Cellular and PCS CDMA/EVDO modes were evaluated at hotspot reduced power levels.

LTE Notes:

1. LTE Considerations: LTE test configurations are determined according to SAR Evaluation Considerations for LTE Devices in FCC KDB Publication 941225 D05v02r01. The general test procedures used for testing can be found in Section 8.4.4.
2. MPR is permanently implemented for this device by the manufacturer. The specific manufacturer target MPR is indicated alongside the SAR results. MPR is enabled for this device, according to 3GPP TS36.101 Section 6.2.3 – 6.2.5 under Table 6.2.3-1.
3. A-MPR was disabled for all SAR tests by setting NS=01 on the base station simulator. SAR tests were performed with the same number of RB and RB offsets transmitting on all TTI frames (maximum TTI).

WLAN Notes:

1. Justification for reduced test configurations for WIFI channels per KDB Publication 248227 D01v01r02 and October 2012 FCC/TCB Meeting Notes for 2.4 GHz WIFI SISO operations: Highest average RF output power channel for the lowest data rate was selected for SAR evaluation in 802.11b. Other SISO IEEE 802.11 modes (including 802.11g/n) were not investigated since the average output powers over all channels and data rates were not more than 0.25 dB higher than the tested channel in the lowest data rate of IEEE 802.11b mode.
2. Justification for reduced test configurations for WIFI channels per KDB Publication 248227 D01v01r02 and October 2012 FCC/TCB Meeting Notes for SISO 5 GHz WIFI operations: Highest average RF output power channel for the lowest data rate was selected for SAR evaluation in 802.11a. Other IEEE SISO 802.11 modes (including 802.11n 20 MHz and 40 MHz bandwidths) were not investigated since the average output powers over all channels and data rates were not more than 0.25 dB higher than the tested channel in the lowest data rate of IEEE 802.11a mode.
3. Per April 2013 TCB Workshop notes, full SISO SAR tests for all IEEE 802.11ac configurations were not required because the average output power was not more than 0.25 dB higher than IEEE 802.11a mode. IEEE 802.11ac SISO was evaluated for the highest IEEE 802.11a position in each 5 GHz band and exposure condition.
4. When Hotspot is enabled, 5.2-5.7 GHz bands are disabled. Therefore no 5.2 – 5.7 GHz WIFI Wireless Router SAR Data was required.
5. Per KDB 248227, SAR for MIMO was measured with both antennas transmitting simultaneously and was evaluated independently of SISO operation. For 2.4 GHz MIMO, IEEE 802.11n was evaluated. For 5 GHz MIMO, IEEE 802.11n 20 MHz bandwidth was evaluated.
6. WIFI transmission was verified using an uncalibrated spectrum analyzer.
7. When the maximum extrapolated peak SAR of the zoom scan for the maximum output channel is <1.6 W/kg and the reported 1g averaged SAR is <0.8 W/kg, SAR testing on other default channels was not required. Testing on other default channels was not required for 10 g Extremity SAR, since the reported 10g averaged SAR is <2.0 W/kg.

© 2014 PCTEST Engineering Laboratory, Inc.

12 FCC MULTI-TX AND ANTENNA SAR CONSIDERATIONS

12.1 Introduction

The following procedures adopted from FCC KDB Publication 447498 D01v05 are applicable to handsets with built-in unlicensed transmitters such as 802.11a/b/g/n/ac and Bluetooth devices which may simultaneously transmit with the licensed transmitter.

12.2 Simultaneous Transmission Procedures

This device contains transmitters that may operate simultaneously. Therefore simultaneous transmission analysis is required. Per FCC KDB 447498 D01v05 IV.C.1.iii and IEEE 1528-2013 Section 6.3.4.1.2, simultaneous transmission SAR test exclusion may be applied when the sum of the 1-g SAR for all the simultaneous transmitting antennas in a specific a physical test configuration is ≤1.6 W/kg. When standalone SAR is not required to be measured, per FCC KDB 447498 D01v05 4.3.2 2), the following equation must be used to estimate the standalone 1g SAR for simultaneous transmission assessment involving that transmitter.

$$\text{Estimated SAR} = \frac{\sqrt{f(GHz)}}{7.5} * \frac{(\text{Max Power of channel, mW})}{\text{Min. Separation Distance, mm}}$$

Table 12-1
Estimated SAR

Mode	Frequency	Maximum Allowed Power	Separation Distance (Body)	Estimated SAR (Body)
	[MHz]	[dBm]	[mm]	[W/kg]
Bluetooth	2480	12.00	15	0.224

Note: Held-to ear configurations are not applicable to Bluetooth operations and therefore were not considered for simultaneous transmission. Per KDB Publication 447498 D01v05, the maximum power of the channel was rounded to the nearest mW before calculation.

Main antenna SAR testing was not required for extremity exposure conditions per FCC KDB 648474. Therefore, no further analysis was required to determine that possible simultaneous scenarios would not exceed the SAR limit.

12.3 Head SAR Simultaneous Transmission Analysis

Table 12-2
Simultaneous Transmission Scenario with 2.4 GHz WLAN Antenna 1 (Held to Ear)

Simult Tx	Configuration	Cell. CDMA SAR (W/kg)	2.4 GHz WLAN Ant 1 SAR (W/kg)	Σ SAR (W/kg)	Simult Tx	Configuration	Cell. EVDO SAR (W/kg)	2.4 GHz WLAN Ant 1 SAR (W/kg)	Σ SAR (W/kg)
Head SAR	Right Cheek	0.140	0.329	**0.469**	Head SAR	Right Cheek	0.111	0.329	**0.440**
	Right Tilt	0.053	0.216	0.269		Right Tilt	0.037	0.216	0.253
	Left Cheek	0.222	0.174	0.396		Left Cheek	0.131	0.174	0.305
	Left Tilt	0.068	0.094	0.162		Left Tilt	0.037	0.094	0.131
Simult Tx	Configuration	PCS CDMA SAR (W/kg)	2.4 GHz WLAN Ant 1 SAR (W/kg)	Σ SAR (W/kg)	Simult Tx	Configuration	PCS EVDO SAR (W/kg)	2.4 GHz WLAN Ant 1 SAR (W/kg)	Σ SAR (W/kg)
Head SAR	Right Cheek	0.276	0.329	**0.605**	Head SAR	Right Cheek	0.081	0.329	**0.410**
	Right Tilt	0.158	0.216	0.374		Right Tilt	0.022	0.216	0.238
	Left Cheek	0.286	0.174	0.460		Left Cheek	0.036	0.174	0.210
	Left Tilt	0.064	0.094	0.158		Left Tilt	0.021	0.094	0.115

© 2014 PCTEST Engineering Laboratory, Inc.

Simult Tx	Configuration	LTE Band 12 SAR (W/kg)	2.4 GHz WLAN Ant 1 SAR (W/kg)	Σ SAR (W/kg)	Simult Tx	Configuration	LTE Band 5 (Cell) SAR (W/kg)	2.4 GHz WLAN Ant 1 SAR (W/kg)	Σ SAR (W/kg)
Head SAR	Right Cheek	0.130	0.329	**0.459**	Head SAR	Right Cheek	0.139	0.329	**0.468**
	Right Tilt	0.075	0.216	0.291		Right Tilt	0.076	0.216	0.292
	Left Cheek	0.084	0.174	0.258		Left Cheek	0.108	0.174	0.282
	Left Tilt	0.085	0.094	0.179		Left Tilt	0.061	0.094	0.155
Simult Tx	Configuration	LTE Band 4 (AWS) SAR (W/kg)	2.4 GHz WLAN Ant 1 SAR (W/kg)	Σ SAR (W/kg)	Simult Tx	Configuration	LTE Band 2 (PCS) SAR (W/kg)	2.4 GHz WLAN Ant 1 SAR (W/kg)	Σ SAR (W/kg)
Head SAR	Right Cheek	0.078	0.329	**0.407**	Head SAR	Right Cheek	0.199	0.329	**0.528**
	Right Tilt	0.102	0.216	0.318		Right Tilt	0.190	0.216	0.406
	Left Cheek	0.101	0.174	0.275		Left Cheek	0.139	0.174	0.313
	Left Tilt	0.113	0.094	0.207		Left Tilt	0.186	0.094	0.280

Table 12-3
Simultaneous Transmission Scenario with 2.4 GHz WLAN Antenna 2 (Held to Ear)

Simult Tx	Configuration	Cell. CDMA SAR (W/kg)	2.4 GHz WLAN Ant 2 SAR (W/kg)	Σ SAR (W/kg)	Simult Tx	Configuration	Cell. EVDO SAR (W/kg)	2.4 GHz WLAN Ant 2 SAR (W/kg)	Σ SAR (W/kg)
Head SAR	Right Cheek	0.140	0.673	**0.813**	Head SAR	Right Cheek	0.111	0.673	**0.784**
	Right Tilt	0.053	0.388	0.441		Right Tilt	0.037	0.388	0.425
	Left Cheek	0.222	0.519	0.741		Left Cheek	0.131	0.519	0.650
	Left Tilt	0.068	0.367	0.435		Left Tilt	0.037	0.367	0.404
Simult Tx	Configuration	PCS CDMA SAR (W/kg)	2.4 GHz WLAN Ant 2 SAR (W/kg)	Σ SAR (W/kg)	Simult Tx	Configuration	PCS EVDO SAR (W/kg)	2.4 GHz WLAN Ant 2 SAR (W/kg)	Σ SAR (W/kg)
Head SAR	Right Cheek	0.276	0.673	**0.949**	Head SAR	Right Cheek	0.081	0.673	**0.754**
	Right Tilt	0.158	0.388	0.546		Right Tilt	0.022	0.388	0.410
	Left Cheek	0.286	0.519	0.805		Left Cheek	0.036	0.519	0.555
	Left Tilt	0.064	0.367	0.431		Left Tilt	0.021	0.367	0.388
Simult Tx	Configuration	LTE Band 12 SAR (W/kg)	2.4 GHz WLAN Ant 2 SAR (W/kg)	Σ SAR (W/kg)	Simult Tx	Configuration	LTE Band 5 (Cell) SAR (W/kg)	2.4 GHz WLAN Ant 2 SAR (W/kg)	Σ SAR (W/kg)
Head SAR	Right Cheek	0.130	0.673	**0.803**	Head SAR	Right Cheek	0.139	0.673	**0.812**
	Right Tilt	0.075	0.388	0.463		Right Tilt	0.076	0.388	0.464
	Left Cheek	0.084	0.519	0.603		Left Cheek	0.108	0.519	0.627
	Left Tilt	0.085	0.367	0.452		Left Tilt	0.061	0.367	0.428
Simult Tx	Configuration	LTE Band 4 (AWS) SAR (W/kg)	2.4 GHz WLAN Ant 2 SAR (W/kg)	Σ SAR (W/kg)	Simult Tx	Configuration	LTE Band 2 (PCS) SAR (W/kg)	2.4 GHz WLAN Ant 2 SAR (W/kg)	Σ SAR (W/kg)
Head SAR	Right Cheek	0.078	0.673	**0.751**	Head SAR	Right Cheek	0.199	0.673	**0.872**
	Right Tilt	0.102	0.388	0.490		Right Tilt	0.190	0.388	0.578
	Left Cheek	0.101	0.519	0.620		Left Cheek	0.139	0.519	0.658
	Left Tilt	0.113	0.367	0.480		Left Tilt	0.186	0.367	0.553

Table 12-4
Simultaneous Transmission Scenario with 2.4 GHz WLAN MIMO (Held to Ear)

Simult Tx	Configuration	Cell. CDMA SAR (W/kg)	2.4 GHz WLAN MIMO SAR (W/kg)	Σ SAR (W/kg)	Simult Tx	Configuration	Cell. EVDO SAR (W/kg)	2.4 GHz WLAN MIMO SAR (W/kg)	Σ SAR (W/kg)
Head SAR	Right Cheek	0.140	0.420	**0.560**	Head SAR	Right Cheek	0.111	0.420	**0.531**
	Right Tilt	0.053	0.312	0.365		Right Tilt	0.037	0.312	0.349
	Left Cheek	0.222	0.291	0.513		Left Cheek	0.131	0.291	0.422
	Left Tilt	0.068	0.190	0.258		Left Tilt	0.037	0.190	0.227
Simult Tx	Configuration	PCS CDMA SAR (W/kg)	2.4 GHz WLAN MIMO SAR (W/kg)	Σ SAR (W/kg)	Simult Tx	Configuration	PCS EVDO SAR (W/kg)	2.4 GHz WLAN MIMO SAR (W/kg)	Σ SAR (W/kg)
Head SAR	Right Cheek	0.276	0.420	**0.696**	Head SAR	Right Cheek	0.081	0.420	**0.501**
	Right Tilt	0.158	0.312	0.470		Right Tilt	0.022	0.312	0.334
	Left Cheek	0.286	0.291	0.577		Left Cheek	0.036	0.291	0.327
	Left Tilt	0.064	0.190	0.254		Left Tilt	0.021	0.190	0.211

© 2014 PCTEST Engineering Laboratory, Inc.

Simult Tx	Configuration	LTE Band 12 SAR (W/kg)	2.4 GHz WLAN MIMO SAR (W/kg)	Σ SAR (W/kg)
Head SAR	Right Cheek	0.130	0.420	**0.550**
	Right Tilt	0.075	0.312	0.387
	Left Cheek	0.084	0.291	0.375
	Left Tilt	0.085	0.190	0.275

Simult Tx	Configuration	LTE Band 5 (Cell) SAR (W/kg)	2.4 GHz WLAN MIMO SAR (W/kg)	Σ SAR (W/kg)
Head SAR	Right Cheek	0.139	0.420	**0.559**
	Right Tilt	0.076	0.312	0.388
	Left Cheek	0.108	0.291	0.399
	Left Tilt	0.061	0.190	0.251

Simult Tx	Configuration	LTE Band 4 (AWS) SAR (W/kg)	2.4 GHz WLAN MIMO SAR (W/kg)	Σ SAR (W/kg)
Head SAR	Right Cheek	0.078	0.420	**0.498**
	Right Tilt	0.102	0.312	0.414
	Left Cheek	0.101	0.291	0.392
	Left Tilt	0.113	0.190	0.303

Simult Tx	Configuration	LTE Band 2 (PCS) SAR (W/kg)	2.4 GHz WLAN MIMO SAR (W/kg)	Σ SAR (W/kg)
Head SAR	Right Cheek	0.199	0.420	**0.619**
	Right Tilt	0.190	0.312	0.502
	Left Cheek	0.139	0.291	0.430
	Left Tilt	0.186	0.190	0.376

Table 12-5
Simultaneous Transmission Scenario with 5 GHz WLAN Antenna 1 (Held to Ear)

Simult Tx	Configuration	Cell. CDMA SAR (W/kg)	5 GHz WLAN Ant 1 SAR (W/kg)	Σ SAR (W/kg)
Head SAR	Right Cheek	0.140	0.096	0.236
	Right Tilt	0.053	0.048	0.101
	Left Cheek	0.222	0.040	**0.262**
	Left Tilt	0.068	0.000	0.068

Simult Tx	Configuration	Cell. EVDO SAR (W/kg)	5 GHz WLAN Ant 1 SAR (W/kg)	Σ SAR (W/kg)
Head SAR	Right Cheek	0.111	0.096	**0.207**
	Right Tilt	0.037	0.048	0.085
	Left Cheek	0.131	0.040	0.171
	Left Tilt	0.037	0.000	0.037

Simult Tx	Configuration	PCS CDMA SAR (W/kg)	5 GHz WLAN Ant 1 SAR (W/kg)	Σ SAR (W/kg)
Head SAR	Right Cheek	0.276	0.096	**0.372**
	Right Tilt	0.158	0.048	0.206
	Left Cheek	0.286	0.040	0.326
	Left Tilt	0.064	0.000	0.064

Simult Tx	Configuration	PCS EVDO SAR (W/kg)	5 GHz WLAN Ant 1 SAR (W/kg)	Σ SAR (W/kg)
Head SAR	Right Cheek	0.081	0.096	**0.177**
	Right Tilt	0.022	0.048	0.070
	Left Cheek	0.036	0.040	0.076
	Left Tilt	0.021	0.000	0.021

Simult Tx	Configuration	LTE Band 12 SAR (W/kg)	5 GHz WLAN Ant 1 SAR (W/kg)	Σ SAR (W/kg)
Head SAR	Right Cheek	0.130	0.096	**0.226**
	Right Tilt	0.075	0.048	0.123
	Left Cheek	0.084	0.040	0.124
	Left Tilt	0.085	0.000	0.085

Simult Tx	Configuration	LTE Band 5 (Cell) SAR (W/kg)	5 GHz WLAN Ant 1 SAR (W/kg)	Σ SAR (W/kg)
Head SAR	Right Cheek	0.139	0.096	**0.235**
	Right Tilt	0.076	0.048	0.124
	Left Cheek	0.108	0.040	0.148
	Left Tilt	0.061	0.000	0.061

Simult Tx	Configuration	LTE Band 4 (AWS) SAR (W/kg)	5 GHz WLAN Ant 1 SAR (W/kg)	Σ SAR (W/kg)
Head SAR	Right Cheek	0.078	0.096	**0.174**
	Right Tilt	0.102	0.048	0.150
	Left Cheek	0.101	0.040	0.141
	Left Tilt	0.113	0.000	0.113

Simult Tx	Configuration	LTE Band 2 (PCS) SAR (W/kg)	5 GHz WLAN Ant 1 SAR (W/kg)	Σ SAR (W/kg)
Head SAR	Right Cheek	0.199	0.096	**0.295**
	Right Tilt	0.190	0.048	0.238
	Left Cheek	0.139	0.040	0.179
	Left Tilt	0.186	0.000	0.186

The worst case 5 GHz WIFI reported SAR for each head configuration was considered for simultaneous SAR exclusion via summation of standalone SAR, regardless of whether the WIFI channel has WIFI Hotspot capability, for simplicity to determine compliance. Please note that the actual simultaneous transmission SAR will not exceed the summed levels indicated.

Table 12-6
Simultaneous Transmission Scenario with 5 GHz WLAN Antenna 2 (Held to Ear)

Simult Tx	Configuration	Cell. CDMA SAR (W/kg)	5 GHz WLAN Ant 2 SAR (W/kg)	Σ SAR (W/kg)
Head SAR	Right Cheek	0.140	0.110	0.250
	Right Tilt	0.053	0.083	0.136
	Left Cheek	0.222	0.160	**0.382**
	Left Tilt	0.068	0.135	0.203

Simult Tx	Configuration	Cell. EVDO SAR (W/kg)	5 GHz WLAN Ant 2 SAR (W/kg)	Σ SAR (W/kg)
Head SAR	Right Cheek	0.111	0.110	0.221
	Right Tilt	0.037	0.083	0.120
	Left Cheek	0.131	0.160	**0.291**
	Left Tilt	0.037	0.135	0.172

© 2014 PCTEST Engineering Laboratory, Inc.

Simult Tx	Configuration	PCS CDMA SAR (W/kg)	5 GHz WLAN Ant 2 SAR (W/kg)	Σ SAR (W/kg)	Simult Tx	Configuration	PCS EVDO SAR (W/kg)	5 GHz WLAN Ant 2 SAR (W/kg)	Σ SAR (W/kg)
Head SAR	Right Cheek	0.276	0.110	0.386	Head SAR	Right Cheek	0.081	0.110	0.191
	Right Tilt	0.158	0.083	0.241		Right Tilt	0.022	0.083	0.105
	Left Cheek	0.286	0.160	**0.446**		Left Cheek	0.036	0.160	**0.196**
	Left Tilt	0.064	0.135	0.199		Left Tilt	0.021	0.135	0.156
Simult Tx	Configuration	LTE Band 12 SAR (W/kg)	5 GHz WLAN Ant 2 SAR (W/kg)	Σ SAR (W/kg)	Simult Tx	Configuration	LTE Band 5 (Cell) SAR (W/kg)	5 GHz WLAN Ant 2 SAR (W/kg)	Σ SAR (W/kg)
Head SAR	Right Cheek	0.130	0.110	0.240	Head SAR	Right Cheek	0.139	0.110	0.249
	Right Tilt	0.075	0.083	0.158		Right Tilt	0.076	0.083	0.159
	Left Cheek	0.084	0.160	**0.244**		Left Cheek	0.108	0.160	**0.268**
	Left Tilt	0.085	0.135	0.220		Left Tilt	0.061	0.135	0.196
Simult Tx	Configuration	LTE Band 4 (AWS) SAR (W/kg)	5 GHz WLAN Ant 2 SAR (W/kg)	Σ SAR (W/kg)	Simult Tx	Configuration	LTE Band 2 (PCS) SAR (W/kg)	5 GHz WLAN Ant 2 SAR (W/kg)	Σ SAR (W/kg)
Head SAR	Right Cheek	0.078	0.110	0.188	Head SAR	Right Cheek	0.199	0.110	0.309
	Right Tilt	0.102	0.083	0.185		Right Tilt	0.190	0.083	0.273
	Left Cheek	0.101	0.160	**0.261**		Left Cheek	0.139	0.160	0.299
	Left Tilt	0.113	0.135	0.248		Left Tilt	0.186	0.135	**0.321**

The worst case 5 GHz WIFI reported SAR for each head configuration was considered for simultaneous SAR exclusion via summation of standalone SAR, regardless of whether the WIFI channel has WIFI Hotspot capability, for simplicity to determine compliance. Please note that the actual simultaneous transmission SAR will not exceed the summed levels indicated.

Table 12-7
Simultaneous Transmission Scenario with 5 GHz WLAN MIMO (Held to Ear)

Simult Tx	Configuration	Cell. CDMA SAR (W/kg)	5 GHz WLAN MIMO SAR (W/kg)	Σ SAR (W/kg)	Simult Tx	Configuration	Cell. EVDO SAR (W/kg)	5 GHz WLAN MIMO SAR (W/kg)	Σ SAR (W/kg)
Head SAR	Right Cheek	0.140	0.249	**0.389**	Head SAR	Right Cheek	0.111	0.249	**0.360**
	Right Tilt	0.053	0.143	0.196		Right Tilt	0.037	0.143	0.180
	Left Cheek	0.222	0.125	0.347		Left Cheek	0.131	0.125	0.256
	Left Tilt	0.068	0.100	0.168		Left Tilt	0.037	0.100	0.137
Simult Tx	Configuration	PCS CDMA SAR (W/kg)	5 GHz WLAN MIMO SAR (W/kg)	Σ SAR (W/kg)	Simult Tx	Configuration	PCS EVDO SAR (W/kg)	5 GHz WLAN MIMO SAR (W/kg)	Σ SAR (W/kg)
Head SAR	Right Cheek	0.276	0.249	**0.525**	Head SAR	Right Cheek	0.081	0.249	**0.330**
	Right Tilt	0.158	0.143	0.301		Right Tilt	0.022	0.143	0.165
	Left Cheek	0.286	0.125	0.411		Left Cheek	0.036	0.125	0.161
	Left Tilt	0.064	0.100	0.164		Left Tilt	0.021	0.100	0.121
Simult Tx	Configuration	LTE Band 12 SAR (W/kg)	5 GHz WLAN MIMO SAR (W/kg)	Σ SAR (W/kg)	Simult Tx	Configuration	LTE Band 4 (AWS) SAR (W/kg)	5 GHz WLAN MIMO SAR (W/kg)	Σ SAR (W/kg)
Head SAR	Right Cheek	0.130	0.249	**0.379**	Head SAR	Right Cheek	0.078	0.249	**0.327**
	Right Tilt	0.075	0.143	0.218		Right Tilt	0.102	0.143	0.245
	Left Cheek	0.084	0.125	0.209		Left Cheek	0.101	0.125	0.226
	Left Tilt	0.085	0.100	0.185		Left Tilt	0.113	0.100	0.213
Simult Tx	Configuration	LTE Band 5 (Cell) SAR (W/kg)	5 GHz WLAN MIMO SAR (W/kg)	Σ SAR (W/kg)	Simult Tx	Configuration	LTE Band 2 (PCS) SAR (W/kg)	5 GHz WLAN MIMO SAR (W/kg)	Σ SAR (W/kg)
Head SAR	Right Cheek	0.139	0.249	**0.388**	Head SAR	Right Cheek	0.199	0.249	**0.448**
	Right Tilt	0.076	0.143	0.219		Right Tilt	0.190	0.143	0.333
	Left Cheek	0.108	0.125	0.233		Left Cheek	0.139	0.125	0.264
	Left Tilt	0.061	0.100	0.161		Left Tilt	0.186	0.100	0.286

The worst case 5 GHz WIFI reported SAR for each head configuration was considered for simultaneous SAR exclusion via summation of standalone SAR, regardless of whether the WIFI channel has WIFI Hotspot capability, for simplicity to determine compliance. Please note that the actual simultaneous transmission SAR will not exceed the summed levels indicated.

© 2014 PCTEST Engineering Laboratory, Inc.

12.4 Body-Worn Simultaneous Transmission Analysis

Note: For SAR summations for body-worn back side at 15 mm, WLAN SAR values for 1.0 cm were used since the 1.0 cm test distance for WLAN was more conservative. “<” denotes that the 1.0 cm WLAN SAR values were used for summation purposes.

Table 12-8
Simultaneous Transmission Scenario with 2.4 GHz WLAN Antenna 1 (Body-Worn at 1.5 cm)

Configuration	Mode	CDMA/LTE SAR (W/kg)	2.4 GHz WLAN Ant 1 SAR (W/kg)	Σ SAR (W/kg)
Back Side	Cell. CDMA	0.510	< 0.134	< 0.644
Back Side	PCS CDMA	0.996	< 0.134	< 1.130
Back Side	LTE Band 12	0.148	< 0.134	< 0.282
Back Side	LTE Band 5 (Cell)	0.136	< 0.134	< 0.270
Back Side	LTE Band 4 (AWS)	0.139	< 0.134	< 0.273
Back Side	LTE Band 2 (PCS)	0.172	< 0.134	< 0.306

Table 12-9
Simultaneous Transmission Scenario with 2.4 GHz WLAN Antenna 2 (Body-Worn at 1.5 cm)

Configuration	Mode	CDMA/LTE SAR (W/kg)	2.4 GHz WLAN Ant 2 SAR (W/kg)	Σ SAR (W/kg)
Back Side	Cell. CDMA	0.510	< 0.139	< 0.649
Back Side	PCS CDMA	0.996	< 0.139	< 1.135
Back Side	LTE Band 12	0.148	< 0.139	< 0.287
Back Side	LTE Band 5 (Cell)	0.136	< 0.139	< 0.275
Back Side	LTE Band 4 (AWS)	0.139	< 0.139	< 0.278
Back Side	LTE Band 2 (PCS)	0.172	< 0.139	< 0.311

Table 12-10
Simultaneous Transmission Scenario with 2.4 GHz WLAN MIMO (Body-Worn at 1.5 cm)

Configuration	Mode	CDMA/LTE SAR (W/kg)	2.4 GHz WLAN MIMO SAR (W/kg)	Σ SAR (W/kg)
Back Side	Cell. CDMA	0.510	< 0.062	< 0.572
Back Side	PCS CDMA	0.996	< 0.062	< 1.058
Back Side	LTE Band 12	0.148	< 0.062	< 0.210
Back Side	LTE Band 5 (Cell)	0.136	< 0.062	< 0.198
Back Side	LTE Band 4 (AWS)	0.139	< 0.062	< 0.201
Back Side	LTE Band 2 (PCS)	0.172	< 0.062	< 0.234

Table 12-11
Simultaneous Transmission Scenario with 5 GHz WLAN Ant 1 (Body-Worn at 1.5 cm)

Configuration	Mode	CDMA/LTE SAR (W/kg)	5 GHz WLAN Ant 1 SAR (W/kg)	Σ SAR (W/kg)
Back Side	Cell. CDMA	0.510	< 0.055	< 0.565
Back Side	PCS CDMA	0.996	< 0.055	< 1.051
Back Side	LTE Band 12	0.148	< 0.055	< 0.203
Back Side	LTE Band 5 (Cell)	0.136	< 0.055	< 0.191
Back Side	LTE Band 4 (AWS)	0.139	< 0.055	< 0.194
Back Side	LTE Band 2 (PCS)	0.172	< 0.055	< 0.227

The worst case 5 GHz WIFI reported SAR for each body-worn configuration was considered for simultaneous SAR exclusion via summation of standalone SAR, regardless of whether the WIFI channel has WIFI Hotspot capability, for simplicity to determine compliance. Please note that the actual simultaneous transmission SAR will not exceed the summed levels indicated.

© 2014 PCTEST Engineering Laboratory, Inc.

Table 12-12
Simultaneous Transmission Scenario with 5 GHz WLAN Ant 2 (Body-Worn at 1.5 cm)

Configuration	Mode	CDMA/LTE SAR (W/kg)	5 GHz WLAN Ant 2 SAR (W/kg)	Σ SAR (W/kg)
Back Side	Cell. CDMA	0.510	< 0.367	< 0.877
Back Side	PCS CDMA	0.996	< 0.367	< 1.363
Back Side	LTE Band 12	0.148	< 0.367	< 0.515
Back Side	LTE Band 5 (Cell)	0.136	< 0.367	< 0.503
Back Side	LTE Band 4 (AWS)	0.139	< 0.367	< 0.506
Back Side	LTE Band 2 (PCS)	0.172	< 0.367	< 0.539

The worst case 5 GHz WIFI reported SAR for each body-worn configuration was considered for simultaneous SAR exclusion via summation of standalone SAR, regardless of whether the WIFI channel has WIFI Hotspot capability, for simplicity to determine compliance. Please note that the actual simultaneous transmission SAR will not exceed the summed levels indicated.

Table 12-13
Simultaneous Transmission Scenario with 5 GHz WLAN MIMO (Body-Worn at 1.5 cm)

Configuration	Mode	CDMA/LTE SAR (W/kg)	5 GHz WLAN MIMO SAR (W/kg)	Σ SAR (W/kg)
Back Side	Cell. CDMA	0.510	< 0.533	< 1.043
Back Side	PCS CDMA	0.996	< 0.533	**< 1.529**
Back Side	LTE Band 12	0.148	< 0.533	< 0.681
Back Side	LTE Band 5 (Cell)	0.136	< 0.533	< 0.669
Back Side	LTE Band 4 (AWS)	0.139	< 0.533	< 0.672
Back Side	LTE Band 2 (PCS)	0.172	< 0.533	< 0.705

The worst case 5 GHz WIFI reported SAR for each body-worn configuration was considered for simultaneous SAR exclusion via summation of standalone SAR, regardless of whether the WIFI channel has WIFI Hotspot capability, for simplicity to determine compliance. Please note that the actual simultaneous transmission SAR will not exceed the summed levels indicated.

Table 12-14
Simultaneous Transmission Scenario with Bluetooth (Body-Worn at 1.5 cm)

Configuration	Mode	CDMA/LTE SAR (W/kg)	Bluetooth SAR (W/kg)	Σ SAR (W/kg)
Back Side	Cell. CDMA	0.510	0.224	0.734
Back Side	PCS CDMA	0.996	0.224	1.220
Back Side	LTE Band 12	0.148	0.224	0.372
Back Side	LTE Band 5 (Cell)	0.136	0.224	0.360
Back Side	LTE Band 4 (AWS)	0.139	0.224	0.363
Back Side	LTE Band 2 (PCS)	0.172	0.224	0.396

Note: Bluetooth SAR was not required to be measured per FCC KDB 447498. Estimated SAR results were used in the above table to determine simultaneous transmission SAR test exclusion.

© 2014 PCTEST Engineering Laboratory, Inc.

12.5 Hotspot SAR Simultaneous Transmission Analysis

Per FCC KDB Publication 941225 D06v01, the devices edges with antennas more than 2.5 cm from edge are not required to be evaluated for SAR ("-").

Table 12-15
Simultaneous Transmission Scenario (2.4 GHz WLAN Antenna 1 at 1.0 cm)

Simult Tx	Configuration	Cell. EVDO SAR (W/kg)	2.4 GHz WLAN Ant 1 SAR (W/kg)	Σ SAR (W/kg)	Simult Tx	Configuration	PCS EVDO SAR (W/kg)	2.4 GHz WLAN Ant 1 SAR (W/kg)	Σ SAR (W/kg)
Body SAR	Back	0.591	0.134	**0.725**	Body SAR	Back	0.370	0.134	0.504
	Front	0.590	0.070	0.660		Front	0.475	0.070	**0.545**
	Top	-	0.026	0.026		Top	-	0.026	0.026
	Bottom	0.358	-	0.358		Bottom	0.493	-	0.493
	Right	0.048	-	0.048		Right	0.040	-	0.040
	Left	0.177	0.048	0.225		Left	0.070	0.048	0.118
Simult Tx	Configuration	LTE Band 12 SAR (W/kg)	2.4 GHz WLAN Ant 1 SAR (W/kg)	Σ SAR (W/kg)	Simult Tx	Configuration	LTE Band 5 (Cell) SAR (W/kg)	2.4 GHz WLAN Ant 1 SAR (W/kg)	Σ SAR (W/kg)
Body SAR	Back	0.163	0.134	**0.297**	Body SAR	Back	0.241	0.134	**0.375**
	Front	0.210	0.070	0.280		Front	0.293	0.070	0.363
	Top	-	0.026	0.026		Top	-	0.026	0.026
	Bottom	0.127	-	0.127		Bottom	0.173	-	0.173
	Right	0.288	-	0.288		Right	0.346	-	0.346
	Left	0.085	0.048	0.133		Left	0.123	0.048	0.171
Simult Tx	Configuration	LTE Band 4 (AWS) SAR (W/kg)	2.4 GHz WLAN Ant 1 SAR (W/kg)	Σ SAR (W/kg)	Simult Tx	Configuration	LTE Band 2 (PCS) SAR (W/kg)	2.4 GHz WLAN Ant 1 SAR (W/kg)	Σ SAR (W/kg)
Body SAR	Back	0.242	0.134	0.376	Body SAR	Back	0.397	0.134	0.531
	Front	0.446	0.070	**0.516**		Front	0.519	0.070	0.589
	Top	-	0.026	0.026		Top	-	0.026	0.026
	Bottom	0.264	-	0.264		Bottom	0.472	-	0.472
	Right	0.468	-	0.468		Right	1.066	-	**1.066**
	Left	0.025	0.048	0.073		Left	0.044	0.048	0.092

Table 12-16
Simultaneous Transmission Scenario (2.4 GHz WLAN Antenna 2 at 1.0 cm)

Simult Tx	Configuration	Cell. EVDO SAR (W/kg)	2.4 GHz WLAN Ant 2 SAR (W/kg)	Σ SAR (W/kg)	Simult Tx	Configuration	PCS EVDO SAR (W/kg)	2.4 GHz WLAN Ant 2 SAR (W/kg)	Σ SAR (W/kg)
Body SAR	Back	0.591	0.139	**0.730**	Body SAR	Back	0.370	0.139	0.509
	Front	0.590	0.075	0.665		Front	0.475	0.075	**0.550**
	Top	-	0.061	0.061		Top	-	0.061	0.061
	Bottom	0.358	-	0.358		Bottom	0.493	-	0.493
	Right	0.048	-	0.048		Right	0.040	-	0.040
	Left	0.177	-	0.177		Left	0.070	-	0.070

© 2014 PCTEST Engineering Laboratory, Inc.

Simult Tx	Configuration	LTE Band 12 SAR (W/kg)	2.4 GHz WLAN Ant 2 SAR (W/kg)	Σ SAR (W/kg)	Simult Tx	Configuration	LTE Band 5 (Cell) SAR (W/kg)	2.4 GHz WLAN Ant 2 SAR (W/kg)	Σ SAR (W/kg)
Body SAR	Back	0.163	0.139	**0.302**	Body SAR	Back	0.241	0.139	**0.380**
	Front	0.210	0.075	0.285		Front	0.293	0.075	0.368
	Top	-	0.061	0.061		Top	-	0.061	0.061
	Bottom	0.127	-	0.127		Bottom	0.173	-	0.173
	Right	0.288	-	0.288		Right	0.346	-	0.346
	Left	0.085	-	0.085		Left	0.123	-	0.123
Simult Tx	Configuration	LTE Band 4 (AWS) SAR (W/kg)	2.4 GHz WLAN Ant 2 SAR (W/kg)	Σ SAR (W/kg)	Simult Tx	Configuration	LTE Band 2 (PCS) SAR (W/kg)	2.4 GHz WLAN Ant 2 SAR (W/kg)	Σ SAR (W/kg)
Body SAR	Back	0.242	0.139	0.381	Body SAR	Back	0.397	0.139	0.536
	Front	0.446	0.075	**0.521**		Front	0.519	0.075	0.594
	Top	-	0.061	0.061		Top	-	0.061	0.061
	Bottom	0.264	-	0.264		Bottom	0.472	-	0.472
	Right	0.468	-	0.468		Right	1.066	-	**1.066**
	Left	0.025	-	0.025		Left	0.044	-	0.044

Table 12-17
Simultaneous Transmission Scenario (2.4 GHz WLAN MIMO at 1.0 cm)

Simult Tx	Configuration	Cell. EVDO SAR (W/kg)	2.4 GHz WLAN MIMO SAR (W/kg)	Σ SAR (W/kg)	Simult Tx	Configuration	PCS EVDO SAR (W/kg)	2.4 GHz WLAN MIMO SAR (W/kg)	Σ SAR (W/kg)
Body SAR	Back	0.591	0.062	**0.653**	Body SAR	Back	0.370	0.062	0.432
	Front	0.590	0.039	0.629		Front	0.475	0.039	**0.514**
	Top	-	0.019	0.019		Top	-	0.019	0.019
	Bottom	0.358	-	0.358		Bottom	0.493	-	0.493
	Right	0.048	-	0.048		Right	0.040	-	0.040
	Left	0.177	0.018	0.195		Left	0.070	0.018	0.088
Simult Tx	Configuration	LTE Band 12 SAR (W/kg)	2.4 GHz WLAN MIMO SAR (W/kg)	Σ SAR (W/kg)	Simult Tx	Configuration	LTE Band 5 (Cell) SAR (W/kg)	2.4 GHz WLAN MIMO SAR (W/kg)	Σ SAR (W/kg)
Body SAR	Back	0.163	0.062	0.225	Body SAR	Back	0.241	0.062	0.303
	Front	0.210	0.039	0.249		Front	0.293	0.039	0.332
	Top	-	0.019	0.019		Top	-	0.019	0.019
	Bottom	0.127	-	0.127		Bottom	0.173	-	0.173
	Right	0.288	-	**0.288**		Right	0.346	-	**0.346**
	Left	0.085	0.018	0.103		Left	0.123	0.018	0.141
Simult Tx	Configuration	LTE Band 4 (AWS) SAR (W/kg)	2.4 GHz WLAN MIMO SAR (W/kg)	Σ SAR (W/kg)	Simult Tx	Configuration	LTE Band 2 (PCS) SAR (W/kg)	2.4 GHz WLAN MIMO SAR (W/kg)	Σ SAR (W/kg)
Body SAR	Back	0.242	0.062	0.304	Body SAR	Back	0.397	0.062	0.459
	Front	0.446	0.039	**0.485**		Front	0.519	0.039	0.558
	Top	-	0.019	0.019		Top	-	0.019	0.019
	Bottom	0.264	-	0.264		Bottom	0.472	-	0.472
	Right	0.468	-	0.468		Right	1.066	-	**1.066**
	Left	0.025	0.018	0.043		Left	0.044	0.018	0.062

© 2014 PCTEST Engineering Laboratory, Inc.

Table 12-18
Simultaneous Transmission Scenario (5.8 GHz WLAN Antenna 1 at 1.0 cm)

Simult Tx	Configuration	Cell. EVDO SAR (W/kg)	5 GHz WLAN Ant 1 SAR (W/kg)	Σ SAR (W/kg)	Simult Tx	Configuration	PCS EVDO SAR (W/kg)	5 GHz WLAN Ant 1 SAR (W/kg)	Σ SAR (W/kg)
Body SAR	Back	0.591	0.055	**0.646**	Body SAR	Back	0.370	0.055	0.425
	Front	0.590	0.013	0.603		Front	0.475	0.013	0.488
	Top	-	0.023	0.023		Top	-	0.023	0.023
	Bottom	0.358	-	0.358		Bottom	0.493	-	**0.493**
	Right	0.048	-	0.048		Right	0.040	-	0.040
	Left	0.177	0.025	0.202		Left	0.070	0.025	0.095
Simult Tx	Configuration	LTE Band 12 SAR (W/kg)	5 GHz WLAN Ant 1 SAR (W/kg)	Σ SAR (W/kg)	Simult Tx	Configuration	LTE Band 5 (Cell) SAR (W/kg)	5 GHz WLAN Ant 1 SAR (W/kg)	Σ SAR (W/kg)
Body SAR	Back	0.163	0.055	0.218	Body SAR	Back	0.241	0.055	0.296
	Front	0.210	0.013	0.223		Front	0.293	0.013	0.306
	Top	-	0.023	0.023		Top	-	0.023	0.023
	Bottom	0.127	-	0.127		Bottom	0.173	-	0.173
	Right	0.288	-	**0.288**		Right	0.346	-	**0.346**
	Left	0.085	0.025	0.110		Left	0.123	0.025	0.148
Simult Tx	Configuration	LTE Band 4 (AWS) SAR (W/kg)	5 GHz WLAN Ant 1 SAR (W/kg)	Σ SAR (W/kg)	Simult Tx	Configuration	LTE Band 2 (PCS) SAR (W/kg)	5 GHz WLAN Ant 1 SAR (W/kg)	Σ SAR (W/kg)
Body SAR	Back	0.242	0.055	0.297	Body SAR	Back	0.397	0.055	0.452
	Front	0.446	0.013	0.459		Front	0.519	0.013	0.532
	Top	-	0.023	0.023		Top	-	0.023	0.023
	Bottom	0.264	-	0.264		Bottom	0.472	-	0.472
	Right	0.468	-	**0.468**		Right	1.066	-	**1.066**
	Left	0.025	0.025	0.050		Left	0.044	0.025	0.069

Table 12-19
Simultaneous Transmission Scenario (5.8 GHz WLAN Antenna 2 at 1.0 cm)

Simult Tx	Configuration	Cell. EVDO SAR (W/kg)	5 GHz WLAN Ant 2 SAR (W/kg)	Σ SAR (W/kg)	Simult Tx	Configuration	PCS EVDO SAR (W/kg)	5 GHz WLAN Ant 2 SAR (W/kg)	Σ SAR (W/kg)
Body SAR	Back	0.591	0.463	**1.054**	Body SAR	Back	0.370	0.463	**0.833**
	Front	0.590	0.031	0.621		Front	0.475	0.031	0.506
	Top	-	0.059	0.059		Top	-	0.059	0.059
	Bottom	0.358	-	0.358		Bottom	0.493	-	0.493
	Right	0.048	-	0.048		Right	0.040	-	0.040
	Left	0.177	-	0.177		Left	0.070	-	0.070
Simult Tx	Configuration	LTE Band 12 SAR (W/kg)	5 GHz WLAN Ant 2 SAR (W/kg)	Σ SAR (W/kg)	Simult Tx	Configuration	LTE Band 5 (Cell) SAR (W/kg)	5 GHz WLAN Ant 2 SAR (W/kg)	Σ SAR (W/kg)
Body SAR	Back	0.163	0.463	**0.626**	Body SAR	Back	0.241	0.463	**0.704**
	Front	0.210	0.031	0.241		Front	0.293	0.031	0.324
	Top	-	0.059	0.059		Top	-	0.059	0.059
	Bottom	0.127	-	0.127		Bottom	0.173	-	0.173
	Right	0.288	-	0.288		Right	0.346	-	0.346
	Left	0.085	-	0.085		Left	0.123	-	0.123

© 2014 PCTEST Engineering Laboratory, Inc.

Simult Tx	Configuration	LTE Band 4 (AWS) SAR (W/kg)	5 GHz WLAN Ant 2 SAR (W/kg)	Σ SAR (W/kg)	Simult Tx	Configuration	LTE Band 2 (PCS) SAR (W/kg)	5 GHz WLAN Ant 2 SAR (W/kg)	Σ SAR (W/kg)
Body SAR	Back	0.242	0.463	**0.705**	Body SAR	Back	0.397	0.463	0.860
	Front	0.446	0.031	0.477		Front	0.519	0.031	0.550
	Top	-	0.059	0.059		Top	-	0.059	0.059
	Bottom	0.264	-	0.264		Bottom	0.472	-	0.472
	Right	0.468	-	0.468		Right	1.066	-	**1.066**
	Left	0.025	-	0.025		Left	0.044	-	0.044

Table 12-20
Simultaneous Transmission Scenario (5.8 GHz WLAN MIMO at 1.0 cm)

Simult Tx	Configuration	Cell. EVDO SAR (W/kg)	5 GHz WLAN MIMO SAR (W/kg)	Σ SAR (W/kg)	Simult Tx	Configuration	PCS EVDO SAR (W/kg)	5 GHz WLAN MIMO SAR (W/kg)	Σ SAR (W/kg)
Body SAR	Back	0.591	0.560	**1.151**	Body SAR	Back	0.370	0.560	**0.930**
	Front	0.590	0.027	0.617		Front	0.475	0.027	0.502
	Top	-	0.158	0.158		Top	-	0.158	0.158
	Bottom	0.358	-	0.358		Bottom	0.493	-	0.493
	Right	0.048	-	0.048		Right	0.040	-	0.040
	Left	0.177	0.088	0.265		Left	0.070	0.088	0.158
Simult Tx	Configuration	LTE Band 12 SAR (W/kg)	5 GHz WLAN MIMO SAR (W/kg)	Σ SAR (W/kg)	Simult Tx	Configuration	LTE Band 5 (Cell) SAR (W/kg)	5 GHz WLAN MIMO SAR (W/kg)	Σ SAR (W/kg)
Body SAR	Back	0.163	0.560	**0.723**	Body SAR	Back	0.241	0.560	**0.801**
	Front	0.210	0.027	0.237		Front	0.293	0.027	0.320
	Top	-	0.158	0.158		Top	-	0.158	0.158
	Bottom	0.127	-	0.127		Bottom	0.173	-	0.173
	Right	0.288	-	0.288		Right	0.346	-	0.346
	Left	0.085	0.088	0.173		Left	0.123	0.088	0.211
Simult Tx	Configuration	LTE Band 4 (AWS) SAR (W/kg)	5 GHz WLAN MIMO SAR (W/kg)	Σ SAR (W/kg)	Simult Tx	Configuration	LTE Band 2 (PCS) SAR (W/kg)	5 GHz WLAN MIMO SAR (W/kg)	Σ SAR (W/kg)
Body SAR	Back	0.242	0.560	**0.802**	Body SAR	Back	0.397	0.560	0.957
	Front	0.446	0.027	0.473		Front	0.519	0.027	0.546
	Top	-	0.158	0.158		Top	-	0.158	0.158
	Bottom	0.264	-	0.264		Bottom	0.472	-	0.472
	Right	0.468	-	0.468		Right	1.066	-	**1.066**
	Left	0.025	0.088	0.113		Left	0.044	0.088	0.132

12.6 SVLTE Simultaneous Transmission Analysis

Table 12-21
Simultaneous Transmission Scenario (Held to Ear)

Simult Tx	Configuration	Cell. CDMA SAR (W/kg)	LTE Band 12 SAR (W/kg)	Σ SAR (W/kg)	Simult Tx	Configuration	PCS CDMA SAR (W/kg)	LTE Band 12 SAR (W/kg)	Σ SAR (W/kg)
Head SAR	Right Cheek	0.140	0.130	0.270	Head SAR	Right Cheek	0.276	0.130	**0.406**
	Right Tilt	0.053	0.075	0.128		Right Tilt	0.158	0.075	0.233
	Left Cheek	0.222	0.084	**0.306**		Left Cheek	0.286	0.084	0.370
	Left Tilt	0.068	0.085	0.153		Left Tilt	0.064	0.085	0.149

© 2014 PCTEST Engineering Laboratory, Inc.

Simult Tx	Configuration	Cell. CDMA SAR (W/kg)	LTE Band 5 (Cell) SAR (W/kg)	Σ SAR (W/kg)	Simult Tx	Configuration	PCS CDMA SAR (W/kg)	LTE Band 5 (Cell) SAR (W/kg)	Σ SAR (W/kg)
Head SAR	Right Cheek	0.140	0.139	0.279	Head SAR	Right Cheek	0.276	0.139	**0.415**
	Right Tilt	0.053	0.076	0.129		Right Tilt	0.158	0.076	0.234
	Left Cheek	0.222	0.108	**0.330**		Left Cheek	0.286	0.108	0.394
	Left Tilt	0.068	0.061	0.129		Left Tilt	0.064	0.061	0.125
Simult Tx	Configuration	Cell. CDMA SAR (W/kg)	LTE Band 4 (AWS) SAR (W/kg)	Σ SAR (W/kg)	Simult Tx	Configuration	PCS CDMA SAR (W/kg)	LTE Band 4 (AWS) SAR (W/kg)	Σ SAR (W/kg)
Head SAR	Right Cheek	0.140	0.078	0.218	Head SAR	Right Cheek	0.276	0.078	0.354
	Right Tilt	0.053	0.102	0.155		Right Tilt	0.158	0.102	0.260
	Left Cheek	0.222	0.101	**0.323**		Left Cheek	0.286	0.101	**0.387**
	Left Tilt	0.068	0.113	0.181		Left Tilt	0.064	0.113	0.177
Simult Tx	Configuration	Cell. CDMA SAR (W/kg)	LTE Band 2 (PCS) SAR (W/kg)	Σ SAR (W/kg)	Simult Tx	Configuration	PCS CDMA SAR (W/kg)	LTE Band 2 (PCS) SAR (W/kg)	Σ SAR (W/kg)
Head SAR	Right Cheek	0.140	0.199	0.339	Head SAR	Right Cheek	0.276	0.199	**0.475**
	Right Tilt	0.053	0.190	0.243		Right Tilt	0.158	0.190	0.348
	Left Cheek	0.222	0.139	**0.361**		Left Cheek	0.286	0.139	0.425
	Left Tilt	0.068	0.186	0.254		Left Tilt	0.064	0.186	0.250

Table 12-22
Simultaneous Transmission Scenario with 2.4 GHz WLAN Antenna 1 (Held to Ear)

Simult Tx	Configuration	Cell. CDMA SAR (W/kg)	LTE Band 12 SAR (W/kg)	2.4 GHz WLAN Ant 1 SAR (W/kg)	Σ SAR (W/kg)	Simult Tx	Configuration	PCS CDMA SAR (W/kg)	LTE Band 12 SAR (W/kg)	2.4 GHz WLAN Ant 1 SAR (W/kg)	Σ SAR (W/kg)
	Tx Antenna	1	2	3	1+2+3		Tx Antenna	1	2	3	1+2+3
Head SAR	Right Cheek	0.078	0.130	0.329	**0.537**	Head SAR	Right Cheek	0.069	0.130	0.329	**0.528**
	Right Tilt	0.027	0.075	0.216	0.318		Right Tilt	0.024	0.075	0.216	0.315
	Left Cheek	0.121	0.084	0.174	0.379		Left Cheek	0.036	0.084	0.174	0.294
	Left Tilt	0.036	0.085	0.094	0.215		Left Tilt	0.019	0.085	0.094	0.198
Simult Tx	Configuration	Cell. CDMA SAR (W/kg)	LTE Band 5 (Cell) SAR (W/kg)	2.4 GHz WLAN Ant 1 SAR (W/kg)	Σ SAR (W/kg)	Simult Tx	Configuration	PCS CDMA SAR (W/kg)	LTE Band 5 (Cell) SAR (W/kg)	2.4 GHz WLAN Ant 1 SAR (W/kg)	Σ SAR (W/kg)
	Tx Antenna	1	2	3	1+2+3		Tx Antenna	1	2	3	1+2+3
Head SAR	Right Cheek	0.078	0.139	0.329	**0.546**	Head SAR	Right Cheek	0.069	0.139	0.329	**0.537**
	Right Tilt	0.027	0.076	0.216	0.319		Right Tilt	0.024	0.076	0.216	0.316
	Left Cheek	0.121	0.108	0.174	0.403		Left Cheek	0.036	0.108	0.174	0.318
	Left Tilt	0.036	0.061	0.094	0.191		Left Tilt	0.019	0.061	0.094	0.174
Simult Tx	Configuration	Cell. CDMA SAR (W/kg)	LTE Band 4 (AWS) SAR (W/kg)	2.4 GHz WLAN Ant 1 SAR (W/kg)	Σ SAR (W/kg)	Simult Tx	Configuration	PCS CDMA SAR (W/kg)	LTE Band 4 (AWS) SAR (W/kg)	2.4 GHz WLAN Ant 1 SAR (W/kg)	Σ SAR (W/kg)
	Tx Antenna	1	2	3	1+2+3		Tx Antenna	1	2	3	1+2+3
Head SAR	Right Cheek	0.078	0.078	0.329	**0.485**	Head SAR	Right Cheek	0.069	0.078	0.329	**0.476**
	Right Tilt	0.027	0.102	0.216	0.345		Right Tilt	0.024	0.102	0.216	0.342
	Left Cheek	0.121	0.101	0.174	0.396		Left Cheek	0.036	0.101	0.174	0.311
	Left Tilt	0.036	0.113	0.094	0.243		Left Tilt	0.019	0.113	0.094	0.226
Simult Tx	Configuration	Cell. CDMA SAR (W/kg)	LTE Band 2 (PCS) SAR (W/kg)	2.4 GHz WLAN Ant 1 SAR (W/kg)	Σ SAR (W/kg)	Simult Tx	Configuration	PCS CDMA SAR (W/kg)	LTE Band 2 (PCS) SAR (W/kg)	2.4 GHz WLAN Ant 1 SAR (W/kg)	Σ SAR (W/kg)
	Tx Antenna	1	2	3	1+2+3		Tx Antenna	1	2	3	1+2+3
Head SAR	Right Cheek	0.078	0.199	0.329	**0.606**	Head SAR	Right Cheek	0.069	0.199	0.329	**0.597**
	Right Tilt	0.027	0.190	0.216	0.433		Right Tilt	0.024	0.190	0.216	0.430
	Left Cheek	0.121	0.139	0.174	0.434		Left Cheek	0.036	0.139	0.174	0.349
	Left Tilt	0.036	0.186	0.094	0.316		Left Tilt	0.019	0.186	0.094	0.299

© 2014 PCTEST Engineering Laboratory, Inc.

Table 12-23
Simultaneous Transmission Scenario with 2.4 GHz WLAN Antenna 2 (Held to Ear)

Simult Tx	Configuration	Cell. CDMA SAR (W/kg)	LTE Band 12 SAR (W/kg)	2.4 GHz WLAN Ant 2 SAR (W/kg)	Σ SAR (W/kg)
	Tx Antenna	1	2	3	1+2+3
Head SAR	Right Cheek	0.078	0.130	0.673	**0.881**
	Right Tilt	0.027	0.075	0.388	0.490
	Left Cheek	0.121	0.084	0.519	0.724
	Left Tilt	0.036	0.085	0.367	0.488

Simult Tx	Configuration	PCS CDMA SAR (W/kg)	LTE Band 12 SAR (W/kg)	2.4 GHz WLAN Ant 2 SAR (W/kg)	Σ SAR (W/kg)
	Tx Antenna	1	2	3	1+2+3
Head SAR	Right Cheek	0.069	0.130	0.673	**0.872**
	Right Tilt	0.024	0.075	0.388	0.487
	Left Cheek	0.036	0.084	0.519	0.639
	Left Tilt	0.019	0.085	0.367	0.471

Simult Tx	Configuration	Cell. CDMA SAR (W/kg)	LTE Band 5 (Cell) SAR (W/kg)	2.4 GHz WLAN Ant 2 SAR (W/kg)	Σ SAR (W/kg)
	Tx Antenna	1	2	3	1+2+3
Head SAR	Right Cheek	0.078	0.139	0.673	**0.890**
	Right Tilt	0.027	0.076	0.388	0.491
	Left Cheek	0.121	0.108	0.519	0.748
	Left Tilt	0.036	0.061	0.367	0.464

Simult Tx	Configuration	PCS CDMA SAR (W/kg)	LTE Band 5 (Cell) SAR (W/kg)	2.4 GHz WLAN Ant 2 SAR (W/kg)	Σ SAR (W/kg)
	Tx Antenna	1	2	3	1+2+3
Head SAR	Right Cheek	0.069	0.139	0.673	**0.881**
	Right Tilt	0.024	0.076	0.388	0.488
	Left Cheek	0.036	0.108	0.519	0.663
	Left Tilt	0.019	0.061	0.367	0.447

Simult Tx	Configuration	Cell. CDMA SAR (W/kg)	LTE Band 4 (AWS) SAR (W/kg)	2.4 GHz WLAN Ant 2 SAR (W/kg)	Σ SAR (W/kg)
	Tx Antenna	1	2	3	1+2+3
Head SAR	Right Cheek	0.078	0.078	0.673	**0.829**
	Right Tilt	0.027	0.102	0.388	0.517
	Left Cheek	0.121	0.101	0.519	0.741
	Left Tilt	0.036	0.113	0.367	0.516

Simult Tx	Configuration	PCS CDMA SAR (W/kg)	LTE Band 4 (AWS) SAR (W/kg)	2.4 GHz WLAN Ant 2 SAR (W/kg)	Σ SAR (W/kg)
	Tx Antenna	1	2	3	1+2+3
Head SAR	Right Cheek	0.069	0.078	0.673	**0.820**
	Right Tilt	0.024	0.102	0.388	0.514
	Left Cheek	0.036	0.101	0.519	0.656
	Left Tilt	0.019	0.113	0.367	0.499

Simult Tx	Configuration	Cell. CDMA SAR (W/kg)	LTE Band 2 (PCS) SAR (W/kg)	2.4 GHz WLAN Ant 2 SAR (W/kg)	Σ SAR (W/kg)
	Tx Antenna	1	2	3	1+2+3
Head SAR	Right Cheek	0.078	0.199	0.673	**0.950**
	Right Tilt	0.027	0.190	0.388	0.605
	Left Cheek	0.121	0.139	0.519	0.779
	Left Tilt	0.036	0.186	0.367	0.589

Simult Tx	Configuration	PCS CDMA SAR (W/kg)	LTE Band 2 (PCS) SAR (W/kg)	2.4 GHz WLAN Ant 2 SAR (W/kg)	Σ SAR (W/kg)
	Tx Antenna	1	2	3	1+2+3
Head SAR	Right Cheek	0.069	0.199	0.673	**0.941**
	Right Tilt	0.024	0.190	0.388	0.602
	Left Cheek	0.036	0.139	0.519	0.694
	Left Tilt	0.019	0.186	0.367	0.572

Table 12-24
Simultaneous Transmission Scenario with 2.4 GHz WLAN MIMO (Held to Ear)

Simult Tx	Configuration	Cell. CDMA SAR (W/kg)	LTE Band 12 SAR (W/kg)	2.4 GHz WLAN MIMO SAR (W/kg)	Σ SAR (W/kg)
	Tx Antenna	1	2	3	1+2+3
Head SAR	Right Cheek	0.078	0.130	0.420	**0.628**
	Right Tilt	0.027	0.075	0.312	0.414
	Left Cheek	0.121	0.084	0.291	0.496
	Left Tilt	0.036	0.085	0.190	0.311

Simult Tx	Configuration	PCS CDMA SAR (W/kg)	LTE Band 12 SAR (W/kg)	2.4 GHz WLAN MIMO SAR (W/kg)	Σ SAR (W/kg)
	Tx Antenna	1	2	3	1+2+3
Head SAR	Right Cheek	0.069	0.130	0.420	**0.619**
	Right Tilt	0.024	0.075	0.312	0.411
	Left Cheek	0.036	0.084	0.291	0.411
	Left Tilt	0.019	0.085	0.190	0.294

Simult Tx	Configuration	Cell. CDMA SAR (W/kg)	LTE Band 5 (Cell) SAR (W/kg)	2.4 GHz WLAN MIMO SAR (W/kg)	Σ SAR (W/kg)
	Tx Antenna	1	2	3	1+2+3
Head SAR	Right Cheek	0.078	0.139	0.420	**0.637**
	Right Tilt	0.027	0.076	0.312	0.415
	Left Cheek	0.121	0.108	0.291	0.520
	Left Tilt	0.036	0.061	0.190	0.287

Simult Tx	Configuration	PCS CDMA SAR (W/kg)	LTE Band 5 (Cell) SAR (W/kg)	2.4 GHz WLAN MIMO SAR (W/kg)	Σ SAR (W/kg)
	Tx Antenna	1	2	3	1+2+3
Head SAR	Right Cheek	0.069	0.139	0.420	**0.628**
	Right Tilt	0.024	0.076	0.312	0.412
	Left Cheek	0.036	0.108	0.291	0.435
	Left Tilt	0.019	0.061	0.190	0.270

Simult Tx	Configuration	Cell. CDMA SAR (W/kg)	LTE Band 4 (AWS) SAR (W/kg)	2.4 GHz WLAN MIMO SAR (W/kg)	Σ SAR (W/kg)
	Tx Antenna	1	2	3	1+2+3
Head SAR	Right Cheek	0.078	0.078	0.420	**0.576**
	Right Tilt	0.027	0.102	0.312	0.441
	Left Cheek	0.121	0.101	0.291	0.513
	Left Tilt	0.036	0.113	0.190	0.339

Simult Tx	Configuration	PCS CDMA SAR (W/kg)	LTE Band 4 (AWS) SAR (W/kg)	2.4 GHz WLAN MIMO SAR (W/kg)	Σ SAR (W/kg)
	Tx Antenna	1	2	3	1+2+3
Head SAR	Right Cheek	0.069	0.078	0.420	**0.567**
	Right Tilt	0.024	0.102	0.312	0.438
	Left Cheek	0.036	0.101	0.291	0.428
	Left Tilt	0.019	0.113	0.190	0.322

© 2014 PCTEST Engineering Laboratory, Inc.

Simult Tx	Configuration	Cell. CDMA SAR (W/kg)	LTE Band 2 (PCS) SAR (W/kg)	2.4 GHz WLAN MIMO SAR (W/kg)	Σ SAR (W/kg)
	Tx Antenna	1	2	3	1+2+3
Head SAR	Right Cheek	0.078	0.199	0.420	**0.697**
	Right Tilt	0.027	0.190	0.312	0.529
	Left Cheek	0.121	0.139	0.291	0.551
	Left Tilt	0.036	0.186	0.190	0.412

Simult Tx	Configuration	PCS CDMA SAR (W/kg)	LTE Band 2 (PCS) SAR (W/kg)	2.4 GHz WLAN MIMO SAR (W/kg)	Σ SAR (W/kg)
	Tx Antenna	1	2	3	1+2+3
Head SAR	Right Cheek	0.069	0.199	0.420	**0.688**
	Right Tilt	0.024	0.190	0.312	0.526
	Left Cheek	0.036	0.139	0.291	0.466
	Left Tilt	0.019	0.186	0.190	0.395

Table 12-25
Simultaneous Transmission Scenario with 5 GHz WLAN Antenna 1 (Held to Ear)

Simult Tx	Configuration	Cell. CDMA SAR (W/kg)	LTE Band 12 SAR (W/kg)	5 GHz WLAN Ant 1 SAR (W/kg)	Σ SAR (W/kg)
	Tx Antenna	1	2	3	1+2+3
Head SAR	Right Cheek	0.078	0.130	0.096	**0.304**
	Right Tilt	0.027	0.075	0.048	0.150
	Left Cheek	0.121	0.084	0.040	0.245
	Left Tilt	0.036	0.085	0.000	0.121

Simult Tx	Configuration	PCS CDMA SAR (W/kg)	LTE Band 12 SAR (W/kg)	5 GHz WLAN Ant 1 SAR (W/kg)	Σ SAR (W/kg)
	Tx Antenna	1	2	3	1+2+3
Head SAR	Right Cheek	0.069	0.130	0.096	**0.295**
	Right Tilt	0.024	0.075	0.048	0.147
	Left Cheek	0.036	0.084	0.040	0.160
	Left Tilt	0.019	0.085	0.000	0.104

Simult Tx	Configuration	Cell. CDMA SAR (W/kg)	LTE Band 5 (Cell) SAR (W/kg)	5 GHz WLAN Ant 1 SAR (W/kg)	Σ SAR (W/kg)
	Tx Antenna	1	2	3	1+2+3
Head SAR	Right Cheek	0.078	0.139	0.096	**0.313**
	Right Tilt	0.027	0.076	0.048	0.151
	Left Cheek	0.121	0.108	0.040	0.269
	Left Tilt	0.036	0.061	0.000	0.097

Simult Tx	Configuration	PCS CDMA SAR (W/kg)	LTE Band 5 (Cell) SAR (W/kg)	5 GHz WLAN Ant 1 SAR (W/kg)	Σ SAR (W/kg)
	Tx Antenna	1	2	3	1+2+3
Head SAR	Right Cheek	0.069	0.139	0.096	**0.304**
	Right Tilt	0.024	0.076	0.048	0.148
	Left Cheek	0.036	0.108	0.040	0.184
	Left Tilt	0.019	0.061	0.000	0.080

Simult Tx	Configuration	Cell. CDMA SAR (W/kg)	LTE Band 4 (AWS) SAR (W/kg)	5 GHz WLAN Ant 1 SAR (W/kg)	Σ SAR (W/kg)
	Tx Antenna	1	2	3	1+2+3
Head SAR	Right Cheek	0.078	0.078	0.096	0.252
	Right Tilt	0.027	0.102	0.048	0.177
	Left Cheek	0.121	0.101	0.040	**0.262**
	Left Tilt	0.036	0.113	0.000	0.149

Simult Tx	Configuration	PCS CDMA SAR (W/kg)	LTE Band 4 (AWS) SAR (W/kg)	5 GHz WLAN Ant 1 SAR (W/kg)	Σ SAR (W/kg)
	Tx Antenna	1	2	3	1+2+3
Head SAR	Right Cheek	0.069	0.078	0.096	**0.243**
	Right Tilt	0.024	0.102	0.048	0.174
	Left Cheek	0.036	0.101	0.040	0.177
	Left Tilt	0.019	0.113	0.000	0.132

Simult Tx	Configuration	Cell. CDMA SAR (W/kg)	LTE Band 2 (PCS) SAR (W/kg)	5 GHz WLAN Ant 1 SAR (W/kg)	Σ SAR (W/kg)
	Tx Antenna	1	2	3	1+2+3
Head SAR	Right Cheek	0.078	0.199	0.096	**0.373**
	Right Tilt	0.027	0.190	0.048	0.265
	Left Cheek	0.121	0.139	0.040	0.300
	Left Tilt	0.036	0.186	0.000	0.222

Simult Tx	Configuration	PCS CDMA SAR (W/kg)	LTE Band 2 (PCS) SAR (W/kg)	5 GHz WLAN Ant 1 SAR (W/kg)	Σ SAR (W/kg)
	Tx Antenna	1	2	3	1+2+3
Head SAR	Right Cheek	0.069	0.199	0.096	**0.364**
	Right Tilt	0.024	0.190	0.048	0.262
	Left Cheek	0.036	0.139	0.040	0.215
	Left Tilt	0.019	0.186	0.000	0.205

The worst case 5 GHz WIFI reported SAR for each head configuration was considered for simultaneous SAR exclusion via summation of standalone SAR, regardless of whether the WIFI channel has WIFI Hotspot capability, for simplicity to determine compliance. Please note that the actual simultaneous transmission SAR will not exceed the summed levels indicated.

Table 12-26
Simultaneous Transmission Scenario with 5 GHz WLAN Antenna 2 (Held to Ear)

Simult Tx	Configuration	Cell. CDMA SAR (W/kg)	LTE Band 12 SAR (W/kg)	5 GHz WLAN Ant 2 SAR (W/kg)	Σ SAR (W/kg)
	Tx Antenna	1	2	3	1+2+3
Head SAR	Right Cheek	0.078	0.130	0.110	0.318
	Right Tilt	0.027	0.075	0.083	0.185
	Left Cheek	0.121	0.084	0.160	**0.365**
	Left Tilt	0.036	0.085	0.135	0.256

Simult Tx	Configuration	PCS CDMA SAR (W/kg)	LTE Band 12 SAR (W/kg)	5 GHz WLAN Ant 2 SAR (W/kg)	Σ SAR (W/kg)
	Tx Antenna	1	2	3	1+2+3
Head SAR	Right Cheek	0.069	0.130	0.110	**0.309**
	Right Tilt	0.024	0.075	0.083	0.182
	Left Cheek	0.036	0.084	0.160	0.280
	Left Tilt	0.019	0.085	0.135	0.239

© 2014 PCTEST Engineering Laboratory, Inc.

Simult Tx	Configuration	Cell. CDMA SAR (W/kg)	LTE Band 5 (Cell) SAR (W/kg)	5 GHz WLAN Ant 2 SAR (W/kg)	Σ SAR (W/kg)
	Tx Antenna	1	2	3	1+2+3
Head SAR	Right Cheek	0.078	0.139	0.110	0.327
	Right Tilt	0.027	0.076	0.083	0.186
	Left Cheek	0.121	0.108	0.160	**0.389**
	Left Tilt	0.036	0.061	0.135	0.232

Simult Tx	Configuration	PCS CDMA SAR (W/kg)	LTE Band 5 (Cell) SAR (W/kg)	5 GHz WLAN Ant 2 SAR (W/kg)	Σ SAR (W/kg)
	Tx Antenna	1	2	3	1+2+3
Head SAR	Right Cheek	0.069	0.139	0.110	**0.318**
	Right Tilt	0.024	0.076	0.083	0.183
	Left Cheek	0.036	0.108	0.160	0.304
	Left Tilt	0.019	0.061	0.135	0.215

Simult Tx	Configuration	Cell. CDMA SAR (W/kg)	LTE Band 4 (AWS) SAR (W/kg)	5 GHz WLAN Ant 2 SAR (W/kg)	Σ SAR (W/kg)
	Tx Antenna	1	2	3	1+2+3
Head SAR	Right Cheek	0.078	0.078	0.110	0.266
	Right Tilt	0.027	0.102	0.083	0.212
	Left Cheek	0.121	0.101	0.160	**0.382**
	Left Tilt	0.036	0.113	0.135	0.284

Simult Tx	Configuration	PCS CDMA SAR (W/kg)	LTE Band 4 (AWS) SAR (W/kg)	5 GHz WLAN Ant 2 SAR (W/kg)	Σ SAR (W/kg)
	Tx Antenna	1	2	3	1+2+3
Head SAR	Right Cheek	0.069	0.078	0.110	0.257
	Right Tilt	0.024	0.102	0.083	0.209
	Left Cheek	0.036	0.101	0.160	**0.297**
	Left Tilt	0.019	0.113	0.135	0.267

Simult Tx	Configuration	Cell. CDMA SAR (W/kg)	LTE Band 2 (PCS) SAR (W/kg)	5 GHz WLAN Ant 2 SAR (W/kg)	Σ SAR (W/kg)
	Tx Antenna	1	2	3	1+2+3
Head SAR	Right Cheek	0.078	0.199	0.110	0.387
	Right Tilt	0.027	0.190	0.083	0.300
	Left Cheek	0.121	0.139	0.160	**0.420**
	Left Tilt	0.036	0.186	0.135	0.357

Simult Tx	Configuration	PCS CDMA SAR (W/kg)	LTE Band 2 (PCS) SAR (W/kg)	5 GHz WLAN Ant 2 SAR (W/kg)	Σ SAR (W/kg)
	Tx Antenna	1	2	3	1+2+3
Head SAR	Right Cheek	0.069	0.199	0.110	**0.378**
	Right Tilt	0.024	0.190	0.083	0.297
	Left Cheek	0.036	0.139	0.160	0.335
	Left Tilt	0.019	0.186	0.135	0.340

The worst case 5 GHz WIFI reported SAR for each head configuration was considered for simultaneous SAR exclusion via summation of standalone SAR, regardless of whether the WIFI channel has WIFI Hotspot capability, for simplicity to determine compliance. Please note that the actual simultaneous transmission SAR will not exceed the summed levels indicated.

Table 12-27
Simultaneous Transmission Scenario with 5 GHz WLAN MIMO (Held to Ear)

Simult Tx	Configuration	Cell. CDMA SAR (W/kg)	LTE Band 12 SAR (W/kg)	5 GHz WLAN MIMO SAR (W/kg)	Σ SAR (W/kg)
	Tx Antenna	1	2	3	1+2+3
Head SAR	Right Cheek	0.078	0.130	0.249	**0.457**
	Right Tilt	0.027	0.075	0.143	0.245
	Left Cheek	0.121	0.084	0.125	0.330
	Left Tilt	0.036	0.085	0.100	0.221

Simult Tx	Configuration	PCS CDMA SAR (W/kg)	LTE Band 12 SAR (W/kg)	5 GHz WLAN MIMO SAR (W/kg)	Σ SAR (W/kg)
	Tx Antenna	1	2	3	1+2+3
Head SAR	Right Cheek	0.069	0.130	0.249	**0.448**
	Right Tilt	0.024	0.075	0.143	0.242
	Left Cheek	0.036	0.084	0.125	0.245
	Left Tilt	0.019	0.085	0.100	0.204

Simult Tx	Configuration	Cell. CDMA SAR (W/kg)	LTE Band 5 (Cell) SAR (W/kg)	5 GHz WLAN MIMO SAR (W/kg)	Σ SAR (W/kg)
	Tx Antenna	1	2	3	1+2+3
Head SAR	Right Cheek	0.078	0.139	0.249	**0.466**
	Right Tilt	0.027	0.076	0.143	0.246
	Left Cheek	0.121	0.108	0.125	0.354
	Left Tilt	0.036	0.061	0.100	0.197

Simult Tx	Configuration	PCS CDMA SAR (W/kg)	LTE Band 5 (Cell) SAR (W/kg)	5 GHz WLAN MIMO SAR (W/kg)	Σ SAR (W/kg)
	Tx Antenna	1	2	3	1+2+3
Head SAR	Right Cheek	0.069	0.139	0.249	**0.457**
	Right Tilt	0.024	0.076	0.143	0.243
	Left Cheek	0.036	0.108	0.125	0.269
	Left Tilt	0.019	0.061	0.100	0.180

Simult Tx	Configuration	Cell. CDMA SAR (W/kg)	LTE Band 4 (AWS) SAR (W/kg)	5 GHz WLAN MIMO SAR (W/kg)	Σ SAR (W/kg)
	Tx Antenna	1	2	3	1+2+3
Head SAR	Right Cheek	0.078	0.078	0.249	**0.405**
	Right Tilt	0.027	0.102	0.143	0.272
	Left Cheek	0.121	0.101	0.125	0.347
	Left Tilt	0.036	0.113	0.100	0.249

Simult Tx	Configuration	PCS CDMA SAR (W/kg)	LTE Band 4 (AWS) SAR (W/kg)	5 GHz WLAN MIMO SAR (W/kg)	Σ SAR (W/kg)
	Tx Antenna	1	2	3	1+2+3
Head SAR	Right Cheek	0.069	0.078	0.249	**0.396**
	Right Tilt	0.024	0.102	0.143	0.269
	Left Cheek	0.036	0.101	0.125	0.262
	Left Tilt	0.019	0.113	0.100	0.232

Simult Tx	Configuration	Cell. CDMA SAR (W/kg)	LTE Band 2 (PCS) SAR (W/kg)	5 GHz WLAN MIMO SAR (W/kg)	Σ SAR (W/kg)
	Tx Antenna	1	2	3	1+2+3
Head SAR	Right Cheek	0.078	0.199	0.249	**0.526**
	Right Tilt	0.027	0.190	0.143	0.360
	Left Cheek	0.121	0.139	0.125	0.385
	Left Tilt	0.036	0.186	0.100	0.322

Simult Tx	Configuration	PCS CDMA SAR (W/kg)	LTE Band 2 (PCS) SAR (W/kg)	5 GHz WLAN MIMO SAR (W/kg)	Σ SAR (W/kg)
	Tx Antenna	1	2	3	1+2+3
Head SAR	Right Cheek	0.069	0.199	0.249	**0.517**
	Right Tilt	0.024	0.190	0.143	0.357
	Left Cheek	0.036	0.139	0.125	0.300
	Left Tilt	0.019	0.186	0.100	0.305

© 2014 PCTEST Engineering Laboratory, Inc.

The worst case 5 GHz WIFI reported SAR for each head configuration was considered for simultaneous SAR exclusion via summation of standalone SAR, regardless of whether the WIFI channel has WIFI Hotspot capability, for simplicity to determine compliance. Please note that the actual simultaneous transmission SAR will not exceed the summed levels indicated.

Table 12-28
Simultaneous Transmission Scenario (Body-Worn at 1.5 cm)

Configuration	Mode	CDMA SAR (W/kg)	LTE Band 12 SAR (W/kg)	Σ SAR (W/kg)	Configuration	Mode	CDMA SAR (W/kg)	LTE Band 5 (Cell) SAR (W/kg)	Σ SAR (W/kg)
Back Side	Cell. CDMA	0.510	0.148	0.658	Back Side	Cell. CDMA	0.510	0.136	0.646
Back Side	PCS CDMA	0.996	0.148	1.144	Back Side	PCS CDMA	0.996	0.136	1.132
Configuration	Mode	CDMA SAR (W/kg)	LTE Band 4 (AWS) SAR (W/kg)	Σ SAR (W/kg)	Configuration	Mode	CDMA SAR (W/kg)	LTE Band 2 (PCS) SAR (W/kg)	Σ SAR (W/kg)
Back Side	Cell. CDMA	0.510	0.139	0.649	Back Side	Cell. CDMA	0.510	0.172	0.682
Back Side	PCS CDMA	0.996	0.139	1.135	Back Side	PCS CDMA	0.996	0.172	1.168

Table 12-29
Simultaneous Transmission Scenario with 2.4 GHz WLAN Antenna 1 (Body-Worn at 1.5 cm)

Configuration	Mode	CDMA SAR (W/kg)	LTE Band 12 SAR (W/kg)	2.4 GHz WLAN Ant 1 SAR (W/kg)	Σ SAR (W/kg)	Configuration	Mode	CDMA SAR (W/kg)	LTE Band 5 (Cell) SAR (W/kg)	2.4 GHz WLAN Ant 1 SAR (W/kg)	Σ SAR (W/kg)
		1	2	3	1+2+3			1	2	3	1+2+3
Back Side	Cell. CDMA	0.292	0.148	< 0.134	< 0.574	Back Side	Cell. CDMA	0.292	0.136	< 0.134	< 0.562
Back Side	PCS CDMA	0.173	0.148	< 0.134	< 0.455	Back Side	PCS CDMA	0.173	0.136	< 0.134	< 0.443
Configuration	Mode	CDMA SAR (W/kg)	LTE Band 4 (AWS) SAR (W/kg)	2.4 GHz WLAN Ant 1 SAR (W/kg)	Σ SAR (W/kg)	Configuration	Mode	CDMA SAR (W/kg)	LTE Band 2 (PCS) SAR (W/kg)	2.4 GHz WLAN Ant 1 SAR (W/kg)	Σ SAR (W/kg)
		1	2	3	1+2+3			1	2	3	1+2+3
Back Side	Cell. CDMA	0.292	0.139	< 0.134	< 0.565	Back Side	Cell. CDMA	0.292	0.172	< 0.134	< 0.598
Back Side	PCS CDMA	0.173	0.139	< 0.134	< 0.446	Back Side	PCS CDMA	0.173	0.172	< 0.134	< 0.479

Table 12-30
Simultaneous Transmission Scenario with 2.4 GHz WLAN Antenna 2 (Body-Worn at 1.5 cm)

Configuration	Mode	CDMA SAR (W/kg)	LTE Band 12 SAR (W/kg)	2.4 GHz WLAN Ant 2 SAR (W/kg)	Σ SAR (W/kg)	Configuration	Mode	CDMA SAR (W/kg)	LTE Band 5 (Cell) SAR (W/kg)	2.4 GHz WLAN Ant 2 SAR (W/kg)	Σ SAR (W/kg)
		1	2	3	1+2+3			1	2	3	1+2+3
Back Side	Cell. CDMA	0.292	0.148	< 0.139	< 0.579	Back Side	Cell. CDMA	0.292	0.136	< 0.139	< 0.567
Back Side	PCS CDMA	0.173	0.148	< 0.139	< 0.460	Back Side	PCS CDMA	0.173	0.136	< 0.139	< 0.448
Configuration	Mode	CDMA SAR (W/kg)	LTE Band 4 (AWS) SAR (W/kg)	2.4 GHz WLAN Ant 2 SAR (W/kg)	Σ SAR (W/kg)	Configuration	Mode	CDMA SAR (W/kg)	LTE Band 2 (PCS) SAR (W/kg)	2.4 GHz WLAN Ant 2 SAR (W/kg)	Σ SAR (W/kg)
		1	2	3	1+2+3			1	2	3	1+2+3
Back Side	Cell. CDMA	0.292	0.139	< 0.139	< 0.570	Back Side	Cell. CDMA	0.292	0.172	< 0.139	< 0.603
Back Side	PCS CDMA	0.173	0.139	< 0.139	< 0.451	Back Side	PCS CDMA	0.173	0.172	< 0.139	< 0.484

© 2014 PCTEST Engineering Laboratory, Inc.

Table 12-31
Simultaneous Transmission Scenario with 2.4 GHz WLAN MIMO (Body-Worn at 1.5 cm)

Configuration	Mode	CDMA SAR (W/kg)	LTE Band 12 SAR (W/kg)	2.4 GHz WLAN MIMO SAR (W/kg)	Σ SAR (W/kg)	Configuration	Mode	CDMA SAR (W/kg)	LTE Band 5 (Cell) SAR (W/kg)	2.4 GHz WLAN MIMO SAR (W/kg)	Σ SAR (W/kg)
		1	2	3	1+2+3			1	2	3	1+2+3
Back Side	Cell. CDMA	0.292	0.148	< 0.062	< 0.502	Back Side	Cell. CDMA	0.292	0.136	< 0.062	< 0.490
Back Side	PCS CDMA	0.173	0.148	< 0.062	< 0.383	Back Side	PCS CDMA	0.173	0.136	< 0.062	< 0.371
Configuration	Mode	CDMA SAR (W/kg)	LTE Band 4 (AWS) SAR (W/kg)	2.4 GHz WLAN MIMO SAR (W/kg)	Σ SAR (W/kg)	Configuration	Mode	CDMA SAR (W/kg)	LTE Band 2 (PCS) SAR (W/kg)	2.4 GHz WLAN MIMO SAR (W/kg)	Σ SAR (W/kg)
		1	2	3	1+2+3			1	2	3	1+2+3
Back Side	Cell. CDMA	0.292	0.139	< 0.062	< 0.493	Back Side	Cell. CDMA	0.292	0.172	< 0.062	< 0.526
Back Side	PCS CDMA	0.173	0.139	< 0.062	< 0.374	Back Side	PCS CDMA	0.173	0.172	< 0.062	< 0.407

Table 12-32
Simultaneous Transmission Scenario with 5 GHz WLAN Antenna 1 (Body-Worn at 1.5 cm)

Configuration	Mode	CDMA SAR (W/kg)	LTE Band 12 SAR (W/kg)	5 GHz WLAN Ant 1 SAR (W/kg)	Σ SAR (W/kg)	Configuration	Mode	CDMA SAR (W/kg)	LTE Band 5 (Cell) SAR (W/kg)	5 GHz WLAN Ant 1 SAR (W/kg)	Σ SAR (W/kg)
		1	2	3	1+2+3			1	2	3	1+2+3
Back Side	Cell. CDMA	0.292	0.148	< 0.055	< 0.495	Back Side	Cell. CDMA	0.292	0.136	< 0.055	< 0.483
Back Side	PCS CDMA	0.173	0.148	< 0.055	< 0.376	Back Side	PCS CDMA	0.173	0.136	< 0.055	< 0.364
Configuration	Mode	CDMA SAR (W/kg)	LTE Band 4 (AWS) SAR (W/kg)	5 GHz WLAN Ant 1 SAR (W/kg)	Σ SAR (W/kg)	Configuration	Mode	CDMA SAR (W/kg)	LTE Band 2 (PCS) SAR (W/kg)	5 GHz WLAN Ant 1 SAR (W/kg)	Σ SAR (W/kg)
		1	2	3	1+2+3			1	2	3	1+2+3
Back Side	Cell. CDMA	0.292	0.139	< 0.055	< 0.486	Back Side	Cell. CDMA	0.292	0.172	< 0.055	< 0.519
Back Side	PCS CDMA	0.173	0.139	< 0.055	< 0.367	Back Side	PCS CDMA	0.173	0.172	< 0.055	< 0.400

The worst case 5 GHz WIFI reported SAR for each body-worn configuration was considered for simultaneous SAR exclusion via summation of standalone SAR, regardless of whether the WIFI channel has WIFI Hotspot capability, for simplicity to determine compliance. Please note that the actual simultaneous transmission SAR will not exceed the summed levels indicated.

Table 12-33
Simultaneous Transmission Scenario with 5 GHz WLAN Antenna 2 (Body-Worn at 1.5 cm)

Configuration	Mode	CDMA SAR (W/kg)	LTE Band 12 SAR (W/kg)	5 GHz WLAN Ant 2 SAR (W/kg)	Σ SAR (W/kg)	Configuration	Mode	CDMA SAR (W/kg)	LTE Band 5 (Cell) SAR (W/kg)	5 GHz WLAN Ant 2 SAR (W/kg)	Σ SAR (W/kg)
		1	2	3	1+2+3			1	2	3	1+2+3
Back Side	Cell. CDMA	0.292	0.148	< 0.367	< 0.807	Back Side	Cell. CDMA	0.292	0.136	< 0.367	< 0.795
Back Side	PCS CDMA	0.173	0.148	< 0.367	< 0.688	Back Side	PCS CDMA	0.173	0.136	< 0.367	< 0.676
Configuration	Mode	CDMA SAR (W/kg)	LTE Band 4 (AWS) SAR (W/kg)	5 GHz WLAN Ant 2 SAR (W/kg)	Σ SAR (W/kg)	Configuration	Mode	CDMA SAR (W/kg)	LTE Band 2 (PCS) SAR (W/kg)	5 GHz WLAN Ant 2 SAR (W/kg)	Σ SAR (W/kg)
		1	2	3	1+2+3			1	2	3	1+2+3
Back Side	Cell. CDMA	0.292	0.139	< 0.367	< 0.798	Back Side	Cell. CDMA	0.292	0.172	< 0.367	< 0.831
Back Side	PCS CDMA	0.173	0.139	< 0.367	< 0.679	Back Side	PCS CDMA	0.173	0.172	< 0.367	< 0.712

The worst case 5 GHz WIFI reported SAR for each body-worn configuration was considered for simultaneous SAR exclusion via summation of standalone SAR, regardless of whether the WIFI channel has WIFI Hotspot capability, for simplicity to determine compliance. Please note that the actual simultaneous transmission SAR will not exceed the summed levels indicated.

© 2014 PCTEST Engineering Laboratory, Inc.

Table 12-34
Simultaneous Transmission Scenario with 5 GHz WLAN MIMO (Body-Worn at 1.5 cm)

Configuration	Mode	CDMA SAR (W/kg)	LTE Band 12 SAR (W/kg)	5 GHz WLAN MIMO SAR (W/kg)	Σ SAR (W/kg)	Configuration	Mode	CDMA SAR (W/kg)	LTE Band 5 (Cell) SAR (W/kg)	5 GHz WLAN MIMO SAR (W/kg)	Σ SAR (W/kg)
		1	2	3	1+2+3			1	2	3	1+2+3
Back Side	Cell. CDMA	0.292	0.148	< 0.533	< 0.973	Back Side	Cell. CDMA	0.292	0.136	< 0.533	< 0.961
Back Side	PCS CDMA	0.173	0.148	< 0.533	< 0.854	Back Side	PCS CDMA	0.173	0.136	< 0.533	< 0.842
Configuration	Mode	CDMA SAR (W/kg)	LTE Band 4 (AWS) SAR (W/kg)	5 GHz WLAN MIMO SAR (W/kg)	Σ SAR (W/kg)	Configuration	Mode	CDMA SAR (W/kg)	LTE Band 2 (PCS) SAR (W/kg)	5 GHz WLAN MIMO SAR (W/kg)	Σ SAR (W/kg)
		1	2	3	1+2+3			1	2	3	1+2+3
Back Side	Cell. CDMA	0.292	0.139	< 0.533	< 0.964	Back Side	Cell. CDMA	0.292	0.172	< 0.533	< 0.997
Back Side	PCS CDMA	0.173	0.139	< 0.533	< 0.845	Back Side	PCS CDMA	0.173	0.172	< 0.533	< 0.878

The worst case 5 GHz WIFI reported SAR for each body-worn configuration was considered for simultaneous SAR exclusion via summation of standalone SAR, regardless of whether the WIFI channel has WIFI Hotspot capability, for simplicity to determine compliance. Please note that the actual simultaneous transmission SAR will not exceed the summed levels indicated.

Table 12-35
Simultaneous Transmission Scenario with Bluetooth (Body-Worn at 1.5 cm)

Configuration	Mode	CDMA SAR (W/kg)	LTE Band 12 SAR (W/kg)	Bluetooth SAR (W/kg)	Σ SAR (W/kg)	Configuration	Mode	CDMA SAR (W/kg)	LTE Band 5 (Cell) SAR (W/kg)	Bluetooth SAR (W/kg)	Σ SAR (W/kg)
		1	2	3	1+2+3			1	2	3	1+2+3
Back Side	Cell. CDMA	0.510	0.148	0.224	0.882	Back Side	Cell. CDMA	0.510	0.136	0.224	0.870
Back Side	PCS CDMA	0.996	0.148	0.224	1.368	Back Side	PCS CDMA	0.996	0.136	0.224	1.356
Configuration	Mode	CDMA SAR (W/kg)	LTE Band 4 (AWS) SAR (W/kg)	Bluetooth SAR (W/kg)	Σ SAR (W/kg)	Configuration	Mode	CDMA SAR (W/kg)	LTE Band 2 (PCS) SAR (W/kg)	Bluetooth SAR (W/kg)	Σ SAR (W/kg)
		1	2	3	1+2+3			1	2	3	1+2+3
Back Side	Cell. CDMA	0.510	0.139	0.224	0.873	Back Side	Cell. CDMA	0.510	0.172	0.224	0.906
Back Side	PCS CDMA	0.996	0.139	0.224	1.359	Back Side	PCS CDMA	0.996	0.172	0.224	1.392

Note: Bluetooth SAR was not required to be measured per FCC KDB 447498. Estimated SAR results were used in the above table to determine simultaneous transmission SAR test exclusion.

Table 12-36
Simultaneous Transmission Scenario (2.4 GHz WLAN Antenna 1 at 1.0 cm)

Simult Tx	Configuration	Cell. CDMA SAR (W/kg)	LTE Band 12 SAR (W/kg)	2.4 GHz WLAN Ant 1 SAR (W/kg)	Σ SAR (W/kg)	Simult Tx	Configuration	PCS CDMA SAR (W/kg)	LTE Band 12 SAR (W/kg)	2.4 GHz WLAN Ant 1 SAR (W/kg)	Σ SAR (W/kg)
	Tx Antenna	1	2	3	1+2+3		Tx Antenna	1	2	3	1+2+3
Body SAR	Back	0.541	0.163	0.134	0.838	Body SAR	Back	0.311	0.163	0.134	0.608
	Front	0.657	0.210	0.070	**0.937**		Front	0.359	0.210	0.070	**0.639**
	Top	-	-	0.026	0.026		Top	-	-	0.026	0.026
	Bottom	0.367	0.127	-	0.494		Bottom	0.315	0.127	-	0.442
	Right	0.059	0.288	-	0.347		Right	0.032	0.288	-	0.320
	Left	0.187	0.085	0.048	0.320		Left	0.048	0.085	0.048	0.181
Simult Tx	Configuration	Cell. CDMA SAR (W/kg)	LTE Band 5 (Cell) SAR (W/kg)	2.4 GHz WLAN Ant 1 SAR (W/kg)	Σ SAR (W/kg)	Simult Tx	Configuration	PCS CDMA SAR (W/kg)	LTE Band 5 (Cell) SAR (W/kg)	2.4 GHz WLAN Ant 1 SAR (W/kg)	Σ SAR (W/kg)
	Tx Antenna	1	2	3	1+2+3		Tx Antenna	1	2	3	1+2+3
Body SAR	Back	0.541	0.241	0.134	0.916	Body SAR	Back	0.311	0.241	0.134	0.686
	Front	0.657	0.293	0.070	**1.020**		Front	0.359	0.293	0.070	**0.722**
	Top	-	-	0.026	0.026		Top	-	-	0.026	0.026
	Bottom	0.367	0.173	-	0.540		Bottom	0.315	0.173	-	0.488
	Right	0.059	0.346	-	0.405		Right	0.032	0.346	-	0.378
	Left	0.187	0.123	0.048	0.358		Left	0.048	0.123	0.048	0.219

© 2014 PCTEST Engineering Laboratory, Inc.

Simult Tx	Configuration	Cell. CDMA SAR (W/kg)	LTE Band 4 (AWS) SAR (W/kg)	2.4 GHz WLAN Ant 1 SAR (W/kg)	Σ SAR (W/kg)
	Tx Antenna	1	2	3	1+2+3
Body SAR	Back	0.541	0.242	0.134	0.917
	Front	0.657	0.446	0.070	**1.173**
	Top	-	-	0.026	0.026
	Bottom	0.367	0.264	-	0.631
	Right	0.059	0.468	-	0.527
	Left	0.187	0.025	0.048	0.260

Simult Tx	Configuration	PCS CDMA SAR (W/kg)	LTE Band 4 (AWS) SAR (W/kg)	2.4 GHz WLAN Ant 1 SAR (W/kg)	Σ SAR (W/kg)
	Tx Antenna	1	2	3	1+2+3
Body SAR	Back	0.311	0.242	0.134	0.687
	Front	0.359	0.446	0.070	**0.875**
	Top	-	-	0.026	0.026
	Bottom	0.315	0.264	-	0.579
	Right	0.032	0.468	-	0.500
	Left	0.048	0.025	0.048	0.121

Simult Tx	Configuration	Cell. CDMA SAR (W/kg)	LTE Band 2 (PCS) SAR (W/kg)	2.4 GHz WLAN Ant 1 SAR (W/kg)	Σ SAR (W/kg)
	Tx Antenna	1	2	3	1+2+3
Body SAR	Back	0.541	0.397	0.134	1.072
	Front	0.657	0.519	0.070	**1.246**
	Top	-	-	0.026	0.026
	Bottom	0.367	0.472	-	0.839
	Right	0.059	1.066	-	1.125
	Left	0.187	0.044	0.048	0.279

Simult Tx	Configuration	PCS CDMA SAR (W/kg)	LTE Band 2 (PCS) SAR (W/kg)	2.4 GHz WLAN Ant 1 SAR (W/kg)	Σ SAR (W/kg)
	Tx Antenna	1	2	3	1+2+3
Body SAR	Back	0.311	0.397	0.134	0.842
	Front	0.359	0.519	0.070	0.948
	Top	-	-	0.026	0.026
	Bottom	0.315	0.472	-	0.787
	Right	0.032	1.066	-	**1.098**
	Left	0.048	0.044	0.048	0.140

Table 12-37
Simultaneous Transmission Scenario (2.4 GHz WLAN Antenna 2 at 1.0 cm)

Simult Tx	Configuration	Cell. CDMA SAR (W/kg)	LTE Band 12 SAR (W/kg)	2.4 GHz WLAN Ant 2 SAR (W/kg)	Σ SAR (W/kg)
	Tx Antenna	1	2	3	1+2+3
Body SAR	Back	0.541	0.163	0.139	0.843
	Front	0.657	0.210	0.075	**0.942**
	Top	-	-	0.061	0.061
	Bottom	0.367	0.127	-	0.494
	Right	0.059	0.288	-	0.347
	Left	0.187	0.085	-	0.272

Simult Tx	Configuration	PCS CDMA SAR (W/kg)	LTE Band 12 SAR (W/kg)	2.4 GHz WLAN Ant 2 SAR (W/kg)	Σ SAR (W/kg)
	Tx Antenna	1	2	3	1+2+3
Body SAR	Back	0.311	0.163	0.139	0.613
	Front	0.359	0.210	0.075	**0.644**
	Top	-	-	0.061	0.061
	Bottom	0.315	0.127	-	0.442
	Right	0.032	0.288	-	0.320
	Left	0.048	0.085	-	0.133

Simult Tx	Configuration	Cell. CDMA SAR (W/kg)	LTE Band 5 (Cell) SAR (W/kg)	2.4 GHz WLAN Ant 2 SAR (W/kg)	Σ SAR (W/kg)
	Tx Antenna	1	2	3	1+2+3
Body SAR	Back	0.541	0.241	0.139	0.921
	Front	0.657	0.293	0.075	**1.025**
	Top	-	-	0.061	0.061
	Bottom	0.367	0.173	-	0.540
	Right	0.059	0.346	-	0.405
	Left	0.187	0.123	-	0.310

Simult Tx	Configuration	PCS CDMA SAR (W/kg)	LTE Band 5 (Cell) SAR (W/kg)	2.4 GHz WLAN Ant 2 SAR (W/kg)	Σ SAR (W/kg)
	Tx Antenna	1	2	3	1+2+3
Body SAR	Back	0.311	0.241	0.139	0.691
	Front	0.359	0.293	0.075	**0.727**
	Top	-	-	0.061	0.061
	Bottom	0.315	0.173	-	0.488
	Right	0.032	0.346	-	0.378
	Left	0.048	0.123	-	0.171

Simult Tx	Configuration	Cell. CDMA SAR (W/kg)	LTE Band 4 (AWS) SAR (W/kg)	2.4 GHz WLAN Ant 2 SAR (W/kg)	Σ SAR (W/kg)
	Tx Antenna	1	2	3	1+2+3
Body SAR	Back	0.541	0.242	0.139	0.922
	Front	0.657	0.446	0.075	**1.178**
	Top	-	-	0.061	0.061
	Bottom	0.367	0.264	-	0.631
	Right	0.059	0.468	-	0.527
	Left	0.187	0.025	-	0.212

Simult Tx	Configuration	PCS CDMA SAR (W/kg)	LTE Band 4 (AWS) SAR (W/kg)	2.4 GHz WLAN Ant 2 SAR (W/kg)	Σ SAR (W/kg)
	Tx Antenna	1	2	3	1+2+3
Body SAR	Back	0.311	0.242	0.139	0.692
	Front	0.359	0.446	0.075	**0.880**
	Top	-	-	0.061	0.061
	Bottom	0.315	0.264	-	0.579
	Right	0.032	0.468	-	0.500
	Left	0.048	0.025	-	0.073

Simult Tx	Configuration	Cell. CDMA SAR (W/kg)	LTE Band 2 (PCS) SAR (W/kg)	2.4 GHz WLAN Ant 2 SAR (W/kg)	Σ SAR (W/kg)
	Tx Antenna	1	2	3	1+2+3
Body SAR	Back	0.541	0.397	0.139	1.077
	Front	0.657	0.519	0.075	**1.251**
	Top	-	-	0.061	0.061
	Bottom	0.367	0.472	-	0.839
	Right	0.059	1.066	-	1.125
	Left	0.187	0.044	-	0.231

Simult Tx	Configuration	PCS CDMA SAR (W/kg)	LTE Band 2 (PCS) SAR (W/kg)	2.4 GHz WLAN Ant 2 SAR (W/kg)	Σ SAR (W/kg)
	Tx Antenna	1	2	3	1+2+3
Body SAR	Back	0.311	0.397	0.139	0.847
	Front	0.359	0.519	0.075	0.953
	Top	-	-	0.061	0.061
	Bottom	0.315	0.472	-	0.787
	Right	0.032	1.066	-	**1.098**
	Left	0.048	0.044	-	0.092

© 2014 PCTEST Engineering Laboratory, Inc.

Table 12-38
Simultaneous Transmission Scenario (2.4 GHz WLAN MIMO at 1.0 cm)

Simult Tx	Configuration	Cell. CDMA SAR (W/kg)	LTE Band 12 SAR (W/kg)	2.4 GHz WLAN MIMO SAR (W/kg)	Σ SAR (W/kg)	Simult Tx	Configuration	PCS CDMA SAR (W/kg)	LTE Band 12 SAR (W/kg)	2.4 GHz WLAN MIMO SAR (W/kg)	Σ SAR (W/kg)
	Tx Antenna	1	2	3	1+2+3		Tx Antenna	1	2	3	1+2+3
Body SAR	Back	0.541	0.163	0.062	0.766	Body SAR	Back	0.311	0.163	0.062	0.536
	Front	0.657	0.210	0.039	**0.906**		Front	0.359	0.210	0.039	**0.608**
	Top	-	-	0.019	0.019		Top	-	-	0.019	0.019
	Bottom	0.367	0.127	-	0.494		Bottom	0.315	0.127	-	0.442
	Right	0.059	0.288	-	0.347		Right	0.032	0.288	-	0.320
	Left	0.187	0.085	0.018	0.290		Left	0.048	0.085	0.018	0.151
Simult Tx	Configuration	Cell. CDMA SAR (W/kg)	LTE Band 5 (Cell) SAR (W/kg)	2.4 GHz WLAN MIMO SAR (W/kg)	Σ SAR (W/kg)	Simult Tx	Configuration	PCS CDMA SAR (W/kg)	LTE Band 5 (Cell) SAR (W/kg)	2.4 GHz WLAN MIMO SAR (W/kg)	Σ SAR (W/kg)
	Tx Antenna	1	2	3	1+2+3		Tx Antenna	1	2	3	1+2+3
Body SAR	Back	0.541	0.241	0.062	0.844	Body SAR	Back	0.311	0.241	0.062	0.614
	Front	0.657	0.293	0.039	**0.989**		Front	0.359	0.293	0.039	**0.691**
	Top	-	-	0.019	0.019		Top	-	-	0.019	0.019
	Bottom	0.367	0.173	-	0.540		Bottom	0.315	0.173	-	0.488
	Right	0.059	0.346	-	0.405		Right	0.032	0.346	-	0.378
	Left	0.187	0.123	0.018	0.328		Left	0.048	0.123	0.018	0.189
Simult Tx	Configuration	Cell. CDMA SAR (W/kg)	LTE Band 4 (AWS) SAR (W/kg)	2.4 GHz WLAN MIMO SAR (W/kg)	Σ SAR (W/kg)	Simult Tx	Configuration	PCS CDMA SAR (W/kg)	LTE Band 4 (AWS) SAR (W/kg)	2.4 GHz WLAN MIMO SAR (W/kg)	Σ SAR (W/kg)
	Tx Antenna	1	2	3	1+2+3		Tx Antenna	1	2	3	1+2+3
Body SAR	Back	0.541	0.242	0.062	0.845	Body SAR	Back	0.311	0.242	0.062	0.615
	Front	0.657	0.446	0.039	**1.142**		Front	0.359	0.446	0.039	**0.844**
	Top	-	-	0.019	0.019		Top	-	-	0.019	0.019
	Bottom	0.367	0.264	-	0.631		Bottom	0.315	0.264	-	0.579
	Right	0.059	0.468	-	0.527		Right	0.032	0.468	-	0.500
	Left	0.187	0.025	0.018	0.230		Left	0.048	0.025	0.018	0.091
Simult Tx	Configuration	Cell. CDMA SAR (W/kg)	LTE Band 2 (PCS) SAR (W/kg)	2.4 GHz WLAN MIMO SAR (W/kg)	Σ SAR (W/kg)	Simult Tx	Configuration	PCS CDMA SAR (W/kg)	LTE Band 2 (PCS) SAR (W/kg)	2.4 GHz WLAN MIMO SAR (W/kg)	Σ SAR (W/kg)
	Tx Antenna	1	2	3	1+2+3		Tx Antenna	1	2	3	1+2+3
Body SAR	Back	0.541	0.397	0.062	1.000	Body SAR	Back	0.311	0.397	0.062	0.770
	Front	0.657	0.519	0.039	**1.215**		Front	0.359	0.519	0.039	0.917
	Top	-	-	0.019	0.019		Top	-	-	0.019	0.019
	Bottom	0.367	0.472	-	0.839		Bottom	0.315	0.472	-	0.787
	Right	0.059	1.066	-	1.125		Right	0.032	1.066	-	**1.098**
	Left	0.187	0.044	0.018	0.249		Left	0.048	0.044	0.018	0.110

Table 12-39
Simultaneous Transmission Scenario (5 GHz WLAN Antenna 1 at 1.0 cm)

Simult Tx	Configuration	Cell. CDMA SAR (W/kg)	LTE Band 12 SAR (W/kg)	5 GHz WLAN Ant 1 SAR (W/kg)	Σ SAR (W/kg)	Simult Tx	Configuration	PCS CDMA SAR (W/kg)	LTE Band 12 SAR (W/kg)	5 GHz WLAN Ant 1 SAR (W/kg)	Σ SAR (W/kg)
	Tx Antenna	1	2	3	1+2+3		Tx Antenna	1	2	3	1+2+3
Body SAR	Back	0.541	0.163	0.055	0.759	Body SAR	Back	0.311	0.163	0.055	0.529
	Front	0.657	0.210	0.013	**0.880**		Front	0.359	0.210	0.013	**0.582**
	Top	-	-	0.023	0.023		Top	-	-	0.023	0.023
	Bottom	0.367	0.127	-	0.494		Bottom	0.315	0.127	-	0.442
	Right	0.059	0.288	-	0.347		Right	0.032	0.288	-	0.320
	Left	0.187	0.085	0.025	0.297		Left	0.048	0.085	0.025	0.158
Simult Tx	Configuration	Cell. CDMA SAR (W/kg)	LTE Band 5 (Cell) SAR (W/kg)	5 GHz WLAN Ant 1 SAR (W/kg)	Σ SAR (W/kg)	Simult Tx	Configuration	PCS CDMA SAR (W/kg)	LTE Band 5 (Cell) SAR (W/kg)	5 GHz WLAN Ant 1 SAR (W/kg)	Σ SAR (W/kg)
	Tx Antenna	1	2	3	1+2+3		Tx Antenna	1	2	3	1+2+3
Body SAR	Back	0.541	0.241	0.055	0.837	Body SAR	Back	0.311	0.241	0.055	0.607
	Front	0.657	0.293	0.013	**0.963**		Front	0.359	0.293	0.013	**0.665**
	Top	-	-	0.023	0.023		Top	-	-	0.023	0.023
	Bottom	0.367	0.173	-	0.540		Bottom	0.315	0.173	-	0.488
	Right	0.059	0.346	-	0.405		Right	0.032	0.346	-	0.378
	Left	0.187	0.123	0.025	0.335		Left	0.048	0.123	0.025	0.196

© 2014 PCTEST Engineering Laboratory, Inc.

Simult Tx	Configuration	Cell. CDMA SAR (W/kg)	LTE Band 4 (AWS) SAR (W/kg)	5 GHz WLAN Ant 1 SAR (W/kg)	Σ SAR (W/kg)
	Tx Antenna	1	2	3	1+2+3
Body SAR	Back	0.541	0.242	0.055	0.838
	Front	0.657	0.446	0.013	**1.116**
	Top	-	-	0.023	0.023
	Bottom	0.367	0.264	-	0.631
	Right	0.059	0.468	-	0.527
	Left	0.187	0.025	0.025	0.237

Simult Tx	Configuration	PCS CDMA SAR (W/kg)	LTE Band 4 (AWS) SAR (W/kg)	5 GHz WLAN Ant 1 SAR (W/kg)	Σ SAR (W/kg)
	Tx Antenna	1	2	3	1+2+3
Body SAR	Back	0.311	0.242	0.055	0.608
	Front	0.359	0.446	0.013	**0.818**
	Top	-	-	0.023	0.023
	Bottom	0.315	0.264	-	0.579
	Right	0.032	0.468	-	0.500
	Left	0.048	0.025	0.025	0.098

Simult Tx	Configuration	Cell. CDMA SAR (W/kg)	LTE Band 2 (PCS) SAR (W/kg)	5 GHz WLAN Ant 1 SAR (W/kg)	Σ SAR (W/kg)
	Tx Antenna	1	2	3	1+2+3
Body SAR	Back	0.541	0.397	0.055	0.993
	Front	0.657	0.519	0.013	**1.189**
	Top	-	-	0.023	0.023
	Bottom	0.367	0.472	-	0.839
	Right	0.059	1.066	-	1.125
	Left	0.187	0.044	0.025	0.256

Simult Tx	Configuration	PCS CDMA SAR (W/kg)	LTE Band 2 (PCS) SAR (W/kg)	5 GHz WLAN Ant 1 SAR (W/kg)	Σ SAR (W/kg)
	Tx Antenna	1	2	3	1+2+3
Body SAR	Back	0.311	0.397	0.055	0.763
	Front	0.359	0.519	0.013	0.891
	Top	-	-	0.023	0.023
	Bottom	0.315	0.472	-	0.787
	Right	0.032	1.066	-	**1.098**
	Left	0.048	0.044	0.025	0.117

Table 12-40
Simultaneous Transmission Scenario (5 GHz WLAN Antenna 2 at 1.0 cm)

Simult Tx	Configuration	Cell. CDMA SAR (W/kg)	LTE Band 12 SAR (W/kg)	5 GHz WLAN Ant 2 SAR (W/kg)	Σ SAR (W/kg)
	Tx Antenna	1	2	3	1+2+3
Body SAR	Back	0.541	0.163	0.463	**1.167**
	Front	0.657	0.210	0.031	0.898
	Top	-	-	0.059	0.059
	Bottom	0.367	0.127	-	0.494
	Right	0.059	0.288	-	0.347
	Left	0.187	0.085	-	0.272

Simult Tx	Configuration	PCS CDMA SAR (W/kg)	LTE Band 12 SAR (W/kg)	5 GHz WLAN Ant 2 SAR (W/kg)	Σ SAR (W/kg)
	Tx Antenna	1	2	3	1+2+3
Body SAR	Back	0.311	0.163	0.463	**0.937**
	Front	0.359	0.210	0.031	0.600
	Top	-	-	0.059	0.059
	Bottom	0.315	0.127	-	0.442
	Right	0.032	0.288	-	0.320
	Left	0.048	0.085	-	0.133

Simult Tx	Configuration	Cell. CDMA SAR (W/kg)	LTE Band 5 (Cell) SAR (W/kg)	5 GHz WLAN Ant 2 SAR (W/kg)	Σ SAR (W/kg)
	Tx Antenna	1	2	3	1+2+3
Body SAR	Back	0.541	0.241	0.463	**1.245**
	Front	0.657	0.293	0.031	0.981
	Top	-	-	0.059	0.059
	Bottom	0.367	0.173	-	0.540
	Right	0.059	0.346	-	0.405
	Left	0.187	0.123	-	0.310

Simult Tx	Configuration	PCS CDMA SAR (W/kg)	LTE Band 5 (Cell) SAR (W/kg)	5 GHz WLAN Ant 2 SAR (W/kg)	Σ SAR (W/kg)
	Tx Antenna	1	2	3	1+2+3
Body SAR	Back	0.311	0.241	0.463	**1.015**
	Front	0.359	0.293	0.031	0.683
	Top	-	-	0.059	0.059
	Bottom	0.315	0.173	-	0.488
	Right	0.032	0.346	-	0.378
	Left	0.048	0.123	-	0.171

Simult Tx	Configuration	Cell. CDMA SAR (W/kg)	LTE Band 4 (AWS) SAR (W/kg)	5 GHz WLAN Ant 2 SAR (W/kg)	Σ SAR (W/kg)
	Tx Antenna	1	2	3	1+2+3
Body SAR	Back	0.541	0.242	0.463	**1.246**
	Front	0.657	0.446	0.031	1.134
	Top	-	-	0.059	0.059
	Bottom	0.367	0.264	-	0.631
	Right	0.059	0.468	-	0.527
	Left	0.187	0.025	-	0.212

Simult Tx	Configuration	PCS CDMA SAR (W/kg)	LTE Band 4 (AWS) SAR (W/kg)	5 GHz WLAN Ant 2 SAR (W/kg)	Σ SAR (W/kg)
	Tx Antenna	1	2	3	1+2+3
Body SAR	Back	0.311	0.242	0.463	**1.016**
	Front	0.359	0.446	0.031	0.836
	Top	-	-	0.059	0.059
	Bottom	0.315	0.264	-	0.579
	Right	0.032	0.468	-	0.500
	Left	0.048	0.025	-	0.073

Simult Tx	Configuration	Cell. CDMA SAR (W/kg)	LTE Band 2 (PCS) SAR (W/kg)	5 GHz WLAN Ant 2 SAR (W/kg)	Σ SAR (W/kg)
	Tx Antenna	1	2	3	1+2+3
Body SAR	Back	0.541	0.397	0.463	**1.401**
	Front	0.657	0.519	0.031	1.207
	Top	-	-	0.059	0.059
	Bottom	0.367	0.472	-	0.839
	Right	0.059	1.066	-	1.125
	Left	0.187	0.044	-	0.231

Simult Tx	Configuration	PCS CDMA SAR (W/kg)	LTE Band 2 (PCS) SAR (W/kg)	5 GHz WLAN Ant 2 SAR (W/kg)	Σ SAR (W/kg)
	Tx Antenna	1	2	3	1+2+3
Body SAR	Back	0.311	0.397	0.463	**1.171**
	Front	0.359	0.519	0.031	0.909
	Top	-	-	0.059	0.059
	Bottom	0.315	0.472	-	0.787
	Right	0.032	1.066	-	1.098
	Left	0.048	0.044	0.025	0.092

© 2014 PCTEST Engineering Laboratory, Inc.

Table 12-41
Simultaneous Transmission Scenario (5 GHz WLAN MIMO at 1.0 cm)

Simult Tx	Configuration	Cell. CDMA SAR (W/kg)	LTE Band 12 SAR (W/kg)	5 GHz WLAN MIMO SAR (W/kg)	Σ SAR (W/kg)	Simult Tx	Configuration	PCS CDMA SAR (W/kg)	LTE Band 12 SAR (W/kg)	5 GHz WLAN MIMO SAR (W/kg)	Σ SAR (W/kg)
	Tx Antenna	1	2	3	1+2+3		Tx Antenna	1	2	3	1+2+3
Body SAR	Back	0.541	0.163	0.560	**1.264**	Body SAR	Back	0.311	0.163	0.560	**1.034**
	Front	0.657	0.210	0.027	0.894		Front	0.359	0.210	0.027	0.596
	Top	-	-	0.158	0.158		Top	-	-	0.158	0.158
	Bottom	0.367	0.127	-	0.494		Bottom	0.315	0.127	-	0.442
	Right	0.059	0.288	-	0.347		Right	0.032	0.288	-	0.320
	Left	0.187	0.085	0.088	0.360		Left	0.048	0.085	0.088	0.221
Simult Tx	Configuration	Cell. CDMA SAR (W/kg)	LTE Band 5 (Cell) SAR (W/kg)	5 GHz WLAN MIMO SAR (W/kg)	Σ SAR (W/kg)	Simult Tx	Configuration	PCS CDMA SAR (W/kg)	LTE Band 5 (Cell) SAR (W/kg)	5 GHz WLAN MIMO SAR (W/kg)	Σ SAR (W/kg)
	Tx Antenna	1	2	3	1+2+3		Tx Antenna	1	2	3	1+2+3
Body SAR	Back	0.541	0.241	0.560	**1.342**	Body SAR	Back	0.311	0.241	0.560	**1.112**
	Front	0.657	0.293	0.027	0.977		Front	0.359	0.293	0.027	0.679
	Top	-	-	0.158	0.158		Top	-	-	0.158	0.158
	Bottom	0.367	0.173	-	0.540		Bottom	0.315	0.173	-	0.488
	Right	0.059	0.346	-	0.405		Right	0.032	0.346	-	0.378
	Left	0.187	0.123	0.088	0.398		Left	0.048	0.123	0.088	0.259
Simult Tx	Configuration	Cell. CDMA SAR (W/kg)	LTE Band 4 (AWS) SAR (W/kg)	5 GHz WLAN MIMO SAR (W/kg)	Σ SAR (W/kg)	Simult Tx	Configuration	PCS CDMA SAR (W/kg)	LTE Band 4 (AWS) SAR (W/kg)	5 GHz WLAN MIMO SAR (W/kg)	Σ SAR (W/kg)
	Tx Antenna	1	2	3	1+2+3		Tx Antenna	1	2	3	1+2+3
Body SAR	Back	0.541	0.242	0.560	**1.343**	Body SAR	Back	0.311	0.242	0.560	**1.113**
	Front	0.657	0.446	0.027	1.130		Front	0.359	0.446	0.027	0.832
	Top	-	-	0.158	0.158		Top	-	-	0.158	0.158
	Bottom	0.367	0.264	-	0.631		Bottom	0.315	0.264	-	0.579
	Right	0.059	0.468	-	0.527		Right	0.032	0.468	-	0.500
	Left	0.187	0.025	0.088	0.300		Left	0.048	0.025	0.088	0.161
Simult Tx	Configuration	Cell. CDMA SAR (W/kg)	LTE Band 2 (PCS) SAR (W/kg)	5 GHz WLAN MIMO SAR (W/kg)	Σ SAR (W/kg)	Simult Tx	Configuration	PCS CDMA SAR (W/kg)	LTE Band 2 (PCS) SAR (W/kg)	5 GHz WLAN MIMO SAR (W/kg)	Σ SAR (W/kg)
	Tx Antenna	1	2	3	1+2+3		Tx Antenna	1	2	3	1+2+3
Body SAR	Back	0.541	0.397	0.560	**1.498**	Body SAR	Back	0.311	0.397	0.560	**1.268**
	Front	0.657	0.519	0.027	1.203		Front	0.359	0.519	0.027	0.905
	Top	-	-	0.158	0.158		Top	-	-	0.158	0.158
	Bottom	0.367	0.472	-	0.839		Bottom	0.315	0.472	-	0.787
	Right	0.059	1.066	-	1.125		Right	0.032	1.066	-	1.098
	Left	0.187	0.044	0.088	0.319		Left	0.048	0.044	0.088	0.180

12.7 Simultaneous Transmission Conclusion

The above numerical summed SAR results for all the worst-case simultaneous transmission conditions were below the SAR limit. Therefore, the above analysis is sufficient to determine that simultaneous transmission cases will not exceed the SAR limit and therefore no measured volumetric simultaneous SAR summation is required per FCC KDB Publication 447498 D01v05 and IEEE 1528-2013 Section 6.3.4.1.2.

© 2014 PCTEST Engineering Laboratory, Inc.

13 SAR MEASUREMENT VARIABILITY

13.1 Measurement Variability

Per FCC KDB Publication 865664 D01v01, SAR measurement variability was assessed for each frequency band, which was determined by the SAR probe calibration point and tissue-equivalent medium used for the device measurements. When both head and body tissue-equivalent media were required for SAR measurements in a frequency band, the variability measurement procedures were applied to the tissue medium with the highest measured SAR, using the highest measured SAR configuration for that tissue-equivalent medium. These additional measurements were repeated after the completion of all measurements requiring the same head or body tissue-equivalent medium in a frequency band. The test device was returned to ambient conditions (normal room temperature) with the battery fully charged before it was re-mounted on the device holder for the repeated measurement(s) to minimize any unexpected variations in the repeated results.

SAR Measurement Variability was assessed using the following procedures for each frequency band:

1) When the original highest measured SAR is ≥ 0.80 W/kg, the measurement was repeated once.
2) A second repeated measurement was preformed only if the ratio of largest to smallest SAR for the original and first repeated measurements was > 1.20 or when the original or repeated measurement was ≥ 1.45 W/kg (~ 10% from the 1-g SAR limit).
3) A third repeated measurement was performed only if the original, first or second repeated measurement was ≥ 1.5 W/kg and the ratio of largest to smallest SAR for the original, first and second repeated measurements is > 1.20.
4) Repeated measurements are not required when the original highest measured SAR is < 0.80 W/kg

Table 13-1
Body SAR Measurement Variability Results

BODY VARIABILITY RESULTS														
Band	FREQUENCY		Mode	Service	Side	Spacing	Measured SAR (1g)	1st Repeated SAR (1g)	Ratio	2nd Repeated SAR (1g)	Ratio	3rd Repeated SAR (1g)	Ratio
	MHz	Ch.					(W/kg)	(W/kg)		(W/kg)		(W/kg)	
1900	1880.00	18900	LTE Band 2 (PCS)	QPSK, 1 RB, 99 RB Offset	right	10 mm	0.999	0.990	1.01	N/A	N/A	N/A	N/A
ANSI / IEEE C95.1 1992 - SAFETY LIMIT Spatial Peak Uncontrolled Exposure/General Population						Body 1.6 W/kg (mW/g) averaged over 1 gram							

Note: Variability SAR tests were not performed for Extremity SAR since the measured 10 gram SAR for a frequency band was less than 2.0 W/kg.

13.2 Measurement Uncertainty

The measured SAR was <1.5 W/kg for all frequency bands. Therefore, per KDB Publication 865664 D01v01, the extended measurement uncertainty analysis per IEEE 1528-2003 was not required.

© 2014 PCTEST Engineering Laboratory, Inc.

14 EQUIPMENT LIST

Manufacturer	Model	Description	Cal Date	Cal Interval	Cal Due	Serial Number
SPEAG	DAK-3.5	Dielectric Assessment Kit	5/6/2014	Annual	5/6/2015	1070
SPEAG	DAK-3.5	Dielectric Assessment Kit	11/13/2013	Annual	11/13/2014	1091
SPEAG	D750V3	750 MHz Dipole	1/20/2014	Annual	1/20/2015	1003
SPEAG	D835V2	835 MHz SAR Dipole	4/7/2014	Annual	4/7/2015	4d119
SPEAG	D1765V2	1765 MHz SAR Dipole	5/7/2014	Annual	5/7/2015	1008
SPEAG	D1900V2	1900 MHz SAR Dipole	4/9/2014	Annual	4/9/2015	5d141
SPEAG	D2450V2	2450 MHz SAR Dipole	1/21/2014	Annual	1/21/2015	797
SPEAG	D5GHzV2	5 GHz SAR Dipole	1/27/2014	Annual	1/27/2015	1057
SPEAG	D5GHzV2	5 GHz SAR Dipole	9/23/2013	Annual	9/23/2014	1007
SPEAG	ES3DV3	SAR Probe	5/15/2014	Annual	5/15/2015	3263
SPEAG	ES3DV3	SAR Probe	4/17/2014	Annual	4/17/2015	3319
SPEAG	ES3DV3	SAR Probe	2/25/2014	Annual	2/25/2015	3258
SPEAG	EX3DV4	SAR Probe	10/23/2013	Annual	10/23/2014	3914
SPEAG	ES3DV3	SAR Probe	3/19/2014	Annual	3/19/2015	3209
SPEAG	ES3DV3	SAR Probe	11/20/2013	Annual	11/20/2014	3287
SPEAG	ES3DV3	SAR Probe	11/25/2013	Annual	11/25/2014	3332
SPEAG	ES3DV2	SAR Probe	8/19/2014	Annual	8/19/2015	3022
SPEAG	EX3DV4	SAR Probe	12/18/2013	Annual	12/18/2014	3920
SPEAG	EX3DV4	SAR Probe	1/29/2014	Annual	1/29/2015	3589
SPEAG	DAE4	Dasy Data Acquisition Electronics	5/14/2014	Annual	5/14/2015	859
SPEAG	DAE4	Dasy Data Acquisition Electronics	4/11/2014	Annual	4/11/2015	1368
SPEAG	DAE4	Dasy Data Acquisition Electronics	2/26/2014	Annual	2/26/2015	665
SPEAG	DAE4	Dasy Data Acquisition Electronics	8/12/2014	Annual	8/12/2015	1322
SPEAG	DAE4	Dasy Data Acquisition Electronics	11/19/2013	Annual	11/19/2014	1333
SPEAG	DAE4	Dasy Data Acquisition Electronics	3/17/2014	Annual	3/17/2015	1334
SPEAG	DAE4	Dasy Data Acquisition Electronics	11/19/2013	Annual	11/19/2014	1408
SPEAG	DAE4	Dasy Data Acquisition Electronics	11/18/2013	Annual	11/18/2014	1407
SPEAG	DAE4	Dasy Data Acquisition Electronics	12/12/2013	Annual	12/12/2014	649
Agilent	8648D	(9kHz-4GHz) Signal Generator	4/15/2014	Annual	4/15/2015	3629U00687
Agilent	E4438C	ESG Vector Signal Generator	4/1/2014	Annual	4/1/2015	MY47270002
Agilent	E4438C	ESG Vector Signal Generator	4/15/2014	Annual	4/15/2015	MY45090700
Agilent	E4438C	ESG Vector Signal Generator	4/15/2014	Annual	4/15/2015	MY45091346
Agilent	8753ES	S-Parameter Network Analyzer	5/22/2014	Annual	5/22/2015	US39170118
Agilent	N5182A	MXG Vector Signal Generator	4/15/2014	Annual	4/15/2015	MY47420651
Agilent	N5182A	MXG Vector Signal Generator	4/15/2014	Annual	4/15/2015	MY47420800
Agilent	E5515C	Wireless Communications Test Set	3/19/2014	Annual	3/19/2015	GB45360985
Agilent	8753ES	S-Parameter Network Analyzer	10/29/2013	Annual	10/29/2014	US39170122
Agilent	E5515C	Wireless Communications Test Set	3/28/2014	Annual	3/28/2015	GB44400860
Agilent	E4438C	ESG Vector Signal Generator	3/31/2014	Annual	3/31/2015	MY42082659
Agilent	N9020A	MXA Signal Analyzer	10/29/2013	Annual	10/29/2014	US46470561
Agilent	E5515C	Wireless Communications Test Set	3/18/2014	Annual	3/18/2015	GB46110872
Agilent	E5515C	Wireless Communications Test Set	11/5/2013	Biennial	11/5/2015	GB46310798
Agilent	E5515C	Wireless Communications Test Set	6/26/2013	Biennial	6/26/2015	GB41450275
Agilent	8594A	(9kHz-2.9GHz) Spectrum Analyzer	CBT	N/A	CBT	3051A00187
Agilent	E8257D	(250kHz-20GHz) Signal Generator	4/15/2014	Annual	4/15/2015	MY45470194
Amplifier Research	15S1G6	Amplifier	CBT	N/A	CBT	433977
Amplifier Research	15S1G6	Amplifier	CBT	N/A	CBT	433972
Amplifier Research	15S1G6	Amplifier	CBT	N/A	CBT	433976
Amplifier Research	15S1G6	Amplifier	CBT	N/A	CBT	433978
Amplifier Research	15S1G6	Amplifier	CBT	N/A	CBT	433971

Note: CBT (Calibrated Before Testing). Prior to testing, the measurement paths containing a cable, amplifier, attenuator, coupler or filter were connected to a calibrated source (i.e. a signal generator) to determine the losses of the measurement path. The power meter offset was then adjusted to compensate for the measurement system losses. This level offset is stored within the power meter before measurements are made. This calibration verification procedure applies to the system verification and output power measurements. The calibrated reading is then taken directly from the power meter after compensation of the losses for all final power measurements.

© 2014 PCTEST Engineering Laboratory, Inc.

Manufacturer	Model	Description	Cal Date	Cal Interval	Cal Due	Serial Number
Anritsu	MA24106A	USB Power Sensor	5/14/2014	Annual	5/14/2015	1231535
Anritsu	ML2495A	Power Meter	10/31/2013	Annual	10/31/2014	1039008
Anritsu	MA24106A	USB Power Sensor	5/15/2014	Annual	5/15/2015	1244512
Anritsu	MA24106A	USB Power Sensor	5/14/2014	Annual	5/14/2015	1248508
Anritsu	MA2411B	Pulse Power Sensor	11/14/2013	Annual	11/14/2014	1126066
Anritsu	MT8820C	Radio Communication Analyzer	12/12/2013	Annual	12/12/2014	6201300731
Anritsu	MA24106A	USB Power Sensor	1/3/2014	Annual	1/3/2015	1349509
Anritsu	MA2481A	Power Sensor	10/30/2013	Annual	10/30/2014	5605
Anritsu	MA24106A	USB Power Sensor	12/18/2013	Annual	12/18/2014	1344559
Anritsu	ML2469A	Power Meter	3/14/2014	Annual	3/14/2015	1306009
Anritsu	MA2411B	Pulse Power Sensor	3/25/2014	Annual	3/25/2015	1207470
Anritsu	MA24106A	USB Power Sensor	12/18/2013	Annual	12/18/2014	1344545
Anritsu	MA24106A	USB Power Sensor	1/3/2014	Annual	1/3/2015	1349503
Anritsu	MA24106A	USB Power Sensor	1/3/2014	Annual	1/3/2015	1349501
Anritsu	MA24106A	USB Power Sensor	1/3/2014	Annual	1/3/2015	1349514
Anritsu	MA24106A	USB Power Sensor	12/18/2013	Annual	12/18/2014	1344555
Anritsu	MA24106A	USB Power Sensor	1/3/2014	Annual	1/3/2015	1344557
Anritsu	MA2411B	Pulse Power Sensor	2/3/2014	Annual	2/3/2015	1339018
COMTech	AR85729-5	Solid State Amplifier	CBT	N/A	CBT	M1S5A00-009
COMTECH	AR85729-5/5759B	Solid State Amplifier	CBT	N/A	CBT	M3W1A00-1002
Control Company	4353	Long Stem Thermometer	9/25/2012	Biennial	9/25/2014	122541143
Control Company	36934-158	Wall-Mounted Thermometer	4/29/2014	Biennial	4/29/2016	122014488
Fisher Scientific	15-077-960	Digital Thermometer	11/6/2012	Biennial	11/6/2014	122640025
Fisher Scientific	15-077-960	Digital Thermometer	12/4/2013	Biennial	12/4/2015	130764558
Fisher Scientific	S407993	Long Stem Thermometer	11/4/2013	Biennial	11/4/2015	130671826
Fisher Scientific	15-078J	Long Stem Thermometer	10/30/2012	Biennial	10/30/2014	122626059
Fisher Scientific	S407993	Long Stem Thermometer	11/4/2013	Biennial	11/4/2015	130671801
Gigatronics	8651A	Universal Power Meter	10/30/2013	Annual	10/30/2014	8650319
Gigatronics	80701A	(0.05-18GHz) Power Sensor	10/30/2013	Annual	10/30/2014	1833460
MCL	BW-N6W5+	6dB Attenuator	CBT	N/A	CBT	1139
MiniCircuits	VLF-6000+	Low Pass Filter	CBT	N/A	CBT	N/A
MiniCircuits	VLF-6000+	Low Pass Filter	CBT	N/A	CBT	N/A
MiniCircuits	SLP-2400+	Low Pass Filter	CBT	N/A	CBT	R8979500903
Mini-Circuits	BW-N20W5+	DC to 18 GHz Precision Fixed 20 dB Attenuator	CBT	N/A	CBT	N/A
Mini-Circuits	NLP-1200+	Low Pass Filter DC to 1000 MHz	CBT	N/A	CBT	N/A
Rohde & Schwarz	CMW500	Radio Communication Tester	2/20/2014	Annual	2/20/2015	128633
Rohde & Schwarz	CMW500	Radio Communication Tester	12/9/2013	Annual	12/9/2014	109366
Rohde & Schwarz	SME06	Signal Generator	10/30/2013	Annual	10/30/2014	832026
Rohde & Schwarz	NRVS	Single Channel Power Meter	10/31/2013	Annual	10/31/2014	835360/0079
Rohde & Schwarz	NRVD	Dual Channel Power Meter	10/12/2012	Biennial	10/12/2014	101695
Rohde & Schwarz	NRV-Z32	Peak Power Sensor	10/12/2012	Biennial	10/12/2014	836019/013
Rohde & Schwarz	CMW500	Radio Communication Tester	10/4/2013	Biennial	10/4/2015	108798
Rohde & Schwarz	CMW500	Radio Communication Tester	4/15/2014	Annual	4/15/2015	102060
Seekonk	NC-100	Torque Wrench	3/18/2014	Biennial	3/18/2016	22313
Tektronix	RSA6114A	Real Time Spectrum Analyzer	4/16/2014	Annual	4/16/2015	B010177

Note: CBT (Calibrated Before Testing). Prior to testing, the measurement paths containing a cable, amplifier, attenuator, coupler or filter were connected to a calibrated source (i.e. a signal generator) to determine the losses of the measurement path. The power meter offset was then adjusted to compensate for the measurement system losses. This level offset is stored within the power meter before measurements are made. This calibration verification procedure applies to the system verification and output power measurements. The calibrated reading is then taken directly from the power meter after compensation of the losses for all final power measurements.

© 2014 PCTEST Engineering Laboratory, Inc.

15 MEASUREMENT UNCERTAINTIES

Applicable for frequencies less than 3000 MHz.

a	b	c	d	e= f(d,k)	f	g	h = c x f/e	i = c x g/e	k
Uncertainty Component	**IEEE 1528 Sec.**	**Tol. (± %)**	**Prob. Dist.**	**Div.**	**c_i 1gm**	**c_i 10 gms**	**1gm u_i (± %)**	**10gms u_i (± %)**	**v_i**
Measurement System									
Probe Calibration	E.2.1	6.0	N	1	1.0	1.0	6.0	6.0	∞
Axial Isotropy	E.2.2	0.25	N	1	0.7	0.7	0.2	0.2	∞
Hemishperical Isotropy	E.2.2	1.3	N	1	1.0	1.0	1.3	1.3	∞
Boundary Effect	E.2.3	0.4	N	1	1.0	1.0	0.4	0.4	∞
Linearity	E.2.4	0.3	N	1	1.0	1.0	0.3	0.3	∞
System Detection Limits	E.2.5	5.1	N	1	1.0	1.0	5.1	5.1	∞
Readout Electronics	E.2.6	1.0	N	1	1.0	1.0	1.0	1.0	∞
Response Time	E.2.7	0.8	R	1.73	1.0	1.0	0.5	0.5	∞
Integration Time	E.2.8	2.6	R	1.73	1.0	1.0	1.5	1.5	∞
RF Ambient Conditions	E.6.1	3.0	R	1.73	1.0	1.0	1.7	1.7	∞
Probe Positioner Mechanical Tolerance	E.6.2	0.4	R	1.73	1.0	1.0	0.2	0.2	∞
Probe Positioning w/ respect to Phantom	E.6.3	2.9	R	1.73	1.0	1.0	1.7	1.7	∞
Extrapolation, Interpolation & Integration algorithms for Max. SAR Evaluation	E.5	1.0	R	1.73	1.0	1.0	0.6	0.6	∞
Test Sample Related									
Test Sample Positioning	E.4.2	6.0	N	1	1.0	1.0	6.0	6.0	287
Device Holder Uncertainty	E.4.1	3.32	R	1.73	1.0	1.0	1.9	1.9	∞
Output Power Variation - SAR drift measurement	6.6.2	5.0	R	1.73	1.0	1.0	2.9	2.9	∞
Phantom & Tissue Parameters									
Phantom Uncertainty (Shape & Thickness tolerances)	E.3.1	4.0	R	1.73	1.0	1.0	2.3	2.3	∞
Liquid Conductivity - deviation from target values	E.3.2	5.0	R	1.73	0.64	0.43	1.8	1.2	∞
Liquid Conductivity - measurement uncertainty	E.3.3	3.8	N	1	0.64	0.43	2.4	1.6	6
Liquid Permittivity - deviation from target values	E.3.2	5.0	R	1.73	0.60	0.49	1.7	1.4	∞
Liquid Permittivity - measurement uncertainty	E.3.3	4.5	N	1	0.60	0.49	2.7	2.2	6
Combined Standard Uncertainty (k=1)			RSS				12.1	11.7	299
Expanded Uncertainty (95% CONFIDENCE LEVEL)			k=2				24.2	23.5	

The above measurement uncertainties are according to IEEE Std. 1528-2003

© 2014 PCTEST Engineering Laboratory, Inc.

Applicable for frequencies up to 6 GHz.

a	b	c	d	e= f(d,k)	f	g	h = c x f/e	i = c x g/e	k
Uncertainty Component	**IEEE 1528 Sec.**	**Tol. (± %)**	**Prob. Dist.**	**Div.**	**c_i 1gm**	**c_i 10 gms**	**1gm u_i (± %)**	**10gms u_i (± %)**	**v_i**
Measurement System									
Probe Calibration	E.2.1	6.55	N	1	1.0	1.0	6.6	6.6	∞
Axial Isotropy	E.2.2	0.25	N	1	0.7	0.7	0.2	0.2	∞
Hemishperical Isotropy	E.2.2	1.3	N	1	1.0	1.0	1.3	1.3	∞
Boundary Effect	E.2.3	0.4	N	1	1.0	1.0	0.4	0.4	∞
Linearity	E.2.4	0.3	N	1	1.0	1.0	0.3	0.3	∞
System Detection Limits	E.2.5	5.1	N	1	1.0	1.0	5.1	5.1	∞
Readout Electronics	E.2.6	1.0	N	1	1.0	1.0	1.0	1.0	∞
Response Time	E.2.7	0.8	R	1.73	1.0	1.0	0.5	0.5	∞
Integration Time	E.2.8	2.6	R	1.73	1.0	1.0	1.5	1.5	∞
RF Ambient Conditions	E.6.1	3.0	R	1.73	1.0	1.0	1.7	1.7	∞
Probe Positioner Mechanical Tolerance	E.6.2	0.4	R	1.73	1.0	1.0	0.2	0.2	∞
Probe Positioning w/ respect to Phantom	E.6.3	2.9	R	1.73	1.0	1.0	1.7	1.7	∞
Extrapolation, Interpolation & Integration algorithms for Max. SAR Evaluation	E.5	1.0	R	1.73	1.0	1.0	0.6	0.6	∞
Test Sample Related									
Test Sample Positioning	E.4.2	6.0	N	1	1.0	1.0	6.0	6.0	287
Device Holder Uncertainty	E.4.1	3.32	R	1.73	1.0	1.0	1.9	1.9	∞
Output Power Variation - SAR drift measurement	6.6.2	5.0	R	1.73	1.0	1.0	2.9	2.9	∞
Phantom & Tissue Parameters									
Phantom Uncertainty (Shape & Thickness tolerances)	E.3.1	4.0	R	1.73	1.0	1.0	2.3	2.3	∞
Liquid Conductivity - deviation from target values	E.3.2	5.0	R	1.73	0.64	0.43	1.8	1.2	∞
Liquid Conductivity - measurement uncertainty	E.3.3	3.8	N	1	0.64	0.43	2.4	1.6	6
Liquid Permittivity - deviation from target values	E.3.2	5.0	R	1.73	0.60	0.49	1.7	1.4	∞
Liquid Permittivity - measurement uncertainty	E.3.3	4.5	N	1	0.60	0.49	2.7	2.2	6
Combined Standard Uncertainty (k=1)			RSS				12.4	12.0	299
Expanded Uncertainty (95% CONFIDENCE LEVEL)			k=2				24.7	24.0	

The above measurement uncertainties are according to IEEE Std. 1528-2003

© 2014 PCTEST Engineering Laboratory, Inc.

16 CONCLUSION

16.1 Measurement Conclusion

The SAR evaluation indicates that the EUT complies with the RF radiation exposure limits of the FCC and Industry Canada, with respect to all parameters subject to this test. These measurements were taken to simulate the RF effects of RF exposure under worst-case conditions. Precise laboratory measures were taken to assure repeatability of the tests. The results and statements relate only to the item(s) tested.

Please note that the absorption and distribution of electromagnetic energy in the body are very complex phenomena that depend on the mass, shape, and size of the body, the orientation of the body with respect to the field vectors, and the electrical properties of both the body and the environment. Other variables that may play a substantial role in possible biological effects are those that characterize the environment (e.g. ambient temperature, air velocity, relative humidity, and body insulation) and those that characterize the individual (e.g. age, gender, activity level, debilitation, or disease). Because various factors may interact with one another to vary the specific biological outcome of an exposure to electromagnetic fields, any protection guide should consider maximal amplification of biological effects as a result of field-body interactions, environmental conditions, and physiological variables. [3]

© 2014 PCTEST Engineering Laboratory, Inc.

17 REFERENCES

[1] Federal Communications Commission, ET Docket 93-62, Guidelines for Evaluating the Environmental Effects of Radiofrequency Radiation, Aug. 1996.

[2] ANSI/IEEE C95.1-2005, American National Standard safety levels with respect to human exposure to radio frequency electromagnetic fields, 3kHz to 300GHz, New York: IEEE, 2006.

[3] ANSI/IEEE C95.1-1992, American National Standard safety levels with respect to human exposure to radio frequency electromagnetic fields, 3kHz to 300GHz, New York: IEEE, Sept. 1992.

[4] ANSI/IEEE C95.3-2002, IEEE Recommended Practice for the Measurement of Potentially Hazardous Electromagnetic Fields - RF and Microwave, New York: IEEE, December 2002.

[5] IEEE Standards Coordinating Committee 39 –Standards Coordinating Committee 34 – IEEE Std. 1528-2003, Recommended Practice for Determining the Peak Spatial-Average Specific Absorption Rate (SAR) in the Human Head Due to Wireless Communications Devices: Measurement Techniques.

[6] NCRP, National Council on Radiation Protection and Measurements, Biological Effects and Exposure Criteria for RadioFrequency Electromagnetic Fields, NCRP Report No. 86, 1986. Reprinted Feb. 1995.

[7] T. Schmid, O. Egger, N. Kuster, Automated E-field scanning system for dosimetric assessments, IEEE Transaction on Microwave Theory and Techniques, vol. 44, Jan. 1996, pp. 105-113.

[8] K. Pokovic, T. Schmid, N. Kuster, Robust setup for precise calibration of E-field probes in tissue simulating liquids at mobile communications frequencies, ICECOM97, Oct. 1997, pp. 1 -124.

[9] K. Pokovic, T. Schmid, and N. Kuster, E-field Probe with improved isotropy in brain simulating liquids, Proceedings of the ELMAR, Zadar, Croatia, June 23-25, 1996, pp. 172-175.

[10] Schmid & Partner Engineering AG, Application Note: Data Storage and Evaluation, June 1998, p2.

[11] V. Hombach, K. Meier, M. Burkhardt, E. Kuhn, N. Kuster, The Dependence of EM Energy Absorption upon Human Modeling at 900 MHz, IEEE Transaction on Microwave Theory and Techniques, vol. 44 no. 10, Oct. 1996, pp. 1865-1873.

[12] N. Kuster and Q. Balzano, Energy absorption mechanism by biological bodies in the near field of dipole antennas above 300MHz, IEEE Transaction on Vehicular Technology, vol. 41, no. 1, Feb. 1992, pp. 17-23.

[13] G. Hartsgrove, A. Kraszewski, A. Surowiec, Simulated Biological Materials for Electromagnetic Radiation Absorption Studies, University of Ottawa, Bioelectromagnetics, Canada: 1987, pp. 29-36.

[14] Q. Balzano, O. Garay, T. Manning Jr., Electromagnetic Energy Exposure of Simulated Users of Portable Cellular Telephones, IEEE Transactions on Vehicular Technology, vol. 44, no.3, Aug. 1995.

[15] W. Gander, Computermathematick, Birkhaeuser, Basel, 1992.

[16] W.H. Press, S.A. Teukolsky, W.T. Vetterling, and B.P. Flannery, Numerical Recipes in C, The Art of Scientific Computing, Second edition, Cambridge University Press, 1992.

[17] N. Kuster, R. Kastle, T. Schmid, Dosimetric evaluation of mobile communications equipment with known precision, IEEE Transaction on Communications, vol. E80-B, no. 5, May 1997, pp. 645-652.

[18] CENELEC CLC/SC111B, European Prestandard (prENV 50166-2), Human Exposure to Electromagnetic Fields High-frequency: 10kHz-300GHz, Jan. 1995.

© 2014 PCTEST Engineering Laboratory, Inc.

[19] Prof. Dr. Niels Kuster, ETH, Eidgenössische Technische Hoschschule Zürich, Dosimetric Evaluation of the Cellular Phone.

[20] IEC 62209-1, Human exposure to radio frequency fields from hand-held and body-mounted wireless communication devices - Human models, instrumentation, and procedures - Part 1: Procedure to determine the specific absorption rate (SAR) for hand-held devices used in close proximity to the ear (frequency range of 300 MHz to 3 GHz), Feb. 2005.

[21] Industry Canada RSS-102 Radio Frequency Exposure Compliance of Radiocommunication Apparatus (All Frequency Bands) Issue 4, March 2010.

[22] Health Canada Safety Code 6 Limits of Human Exposure to Radio Frequency Electromagnetic Fields in the Frequency Range from 3 kHz – 300 GHz, 2009

[23] FCC SAR Test Procedures for 2G-3G Devices, Mobile Hotspot and UMPC Devices KDB Publications 941225, D01-D07

[24] SAR Measurement procedures for IEEE 802.11a/b/g KDB Publication 248227 D01v01r02

[25] FCC SAR Considerations for Handsets with Multiple Transmitters and Antennas, KDB Publications 648474 D02-D04

[26] FCC SAR Evaluation Considerations for Laptop, Notebook, Netbook and Tablet Computers, FCC KDB Publication 616217 D04

[27] FCC SAR Measurement and Reporting Requirements for 100MHz – 6 GHz, KDB Publications 865664 D01-D02

[28] FCC General RF Exposure Guidance and SAR Procedures for Dongles, KDB Publication 447498, D01-D02

[29] Anexo à Resolução No. 533, de 10 de Septembro de 2009.

[30] IEC 62209-2, Human exposure to radio frequency fields from hand-held and body-mounted wireless communication devices - Human models, instrumentation, and procedures - Part 2: Procedure to determine the specific absorption rate (SAR) for wireless communication devices used in close proximity to the human body (frequency range of 30 MHz to 6 GHz), Mar. 2010.

© 2014 PCTEST Engineering Laboratory, Inc.

APPENDIX A: SAR TEST DATA

© 2014 PCTEST Engineering Laboratory, Inc.

PCTEST ENGINEERING LABORATORY, INC.

DUT: A3LSMN910R4; Type: Portable Handset; Serial: 33ED6

Communication System: UID 0, CDMA; Frequency: 836.52 MHz;Duty Cycle: 1:1
Medium: 835 Head Medium parameters used (interpolated):
f = 836.52 MHz; σ = 0.936 S/m; ε_r = 42.446; ρ = 1000 kg/m^3
Phantom section: Left Section

Test Date: 09-08-2014; Ambient Temp: 24.8°C; Tissue Temp: 22.8°C

Probe: ES3DV3 - SN3319; ConvF(6.27, 6.27, 6.27); Calibrated: 4/17/2014;
Sensor-Surface: 3mm (Mechanical Surface Detection)
Electronics: DAE4 Sn1368; Calibrated: 4/11/2014
Phantom: SAM; Type: QD000P40CD; Serial: TP:1758
Measurement SW: DASY52, Version 52.8 (8); SEMCAD X Version 14.6.10 (7331)

Mode: Cell EVDO Rev. A, Left Head, Cheek, Mid.ch, Standard Cover

Area Scan (9x15x1): Measurement grid: dx=15mm, dy=15mm
Zoom Scan (5x6x7)/Cube 0: Measurement grid: dx=8mm, dy=8mm, dz=5mm
Reference Value = 15.73 V/m; Power Drift = 0.03 dB
Peak SAR (extrapolated) = 0.250 W/kg
SAR(1 g) = 0.194 W/kg

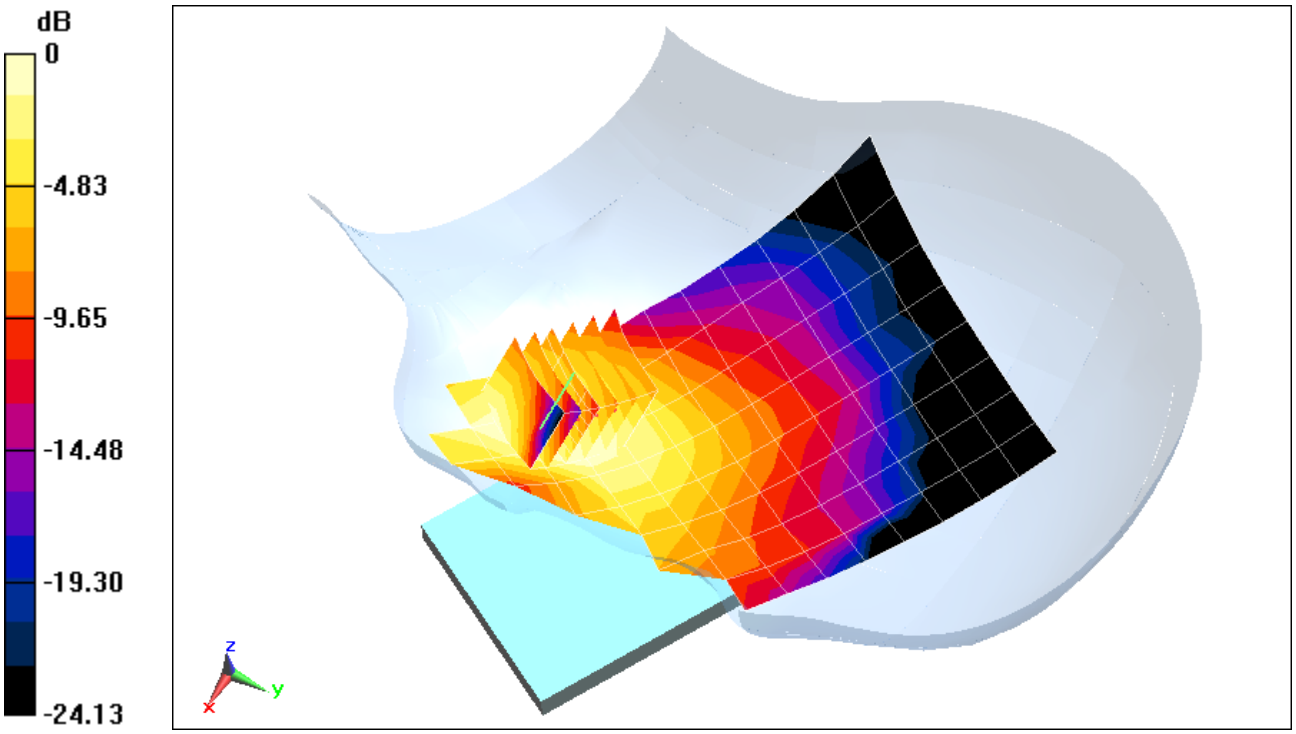

0 dB = 0.216 W/kg = -6.66 dBW/kg

PCTEST ENGINEERING LABORATORY, INC.

DUT: A3LSMN910R4; Type: Portable Handset; Serial: 33ED8

Communication System: UID 0, CDMA; Frequency: 1880 MHz;Duty Cycle: 1:1
Medium: 1900 Head Medium parameters used:
f = 1880 MHz; σ = 1.434 S/m; ε_r = 39.807; ρ = 1000 kg/m^3
Phantom section: Left Section

Test Date: 09-08-2014; Ambient Temp: 23.6°C; Tissue Temp: 22.4°C

Probe: ES3DV2 - SN3022; ConvF(4.85, 4.85, 4.85); Calibrated: 8/19/2014;
Sensor-Surface: 3mm (Mechanical Surface Detection)
Electronics: DAE4 Sn1322; Calibrated: 8/12/2014
Phantom: SAM with CRP v4.0; Type: QD000P40CD; Serial: TP:1800
Measurement SW: DASY52, Version 52.8 (8); SEMCAD X Version 14.6.10 (7331)

Mode: PCS EVDO Rev. A, Left Head, Cheek, Mid.ch, Standard Cover

Area Scan (9x14x1): Measurement grid: dx=15mm, dy=15mm
Zoom Scan (5x5x7)/Cube 0: Measurement grid: dx=8mm, dy=8mm, dz=5mm
Reference Value = 15.40 V/m; Power Drift = -0.19 dB
Peak SAR (extrapolated) = 0.516 W/kg
SAR(1 g) = 0.292 W/kg

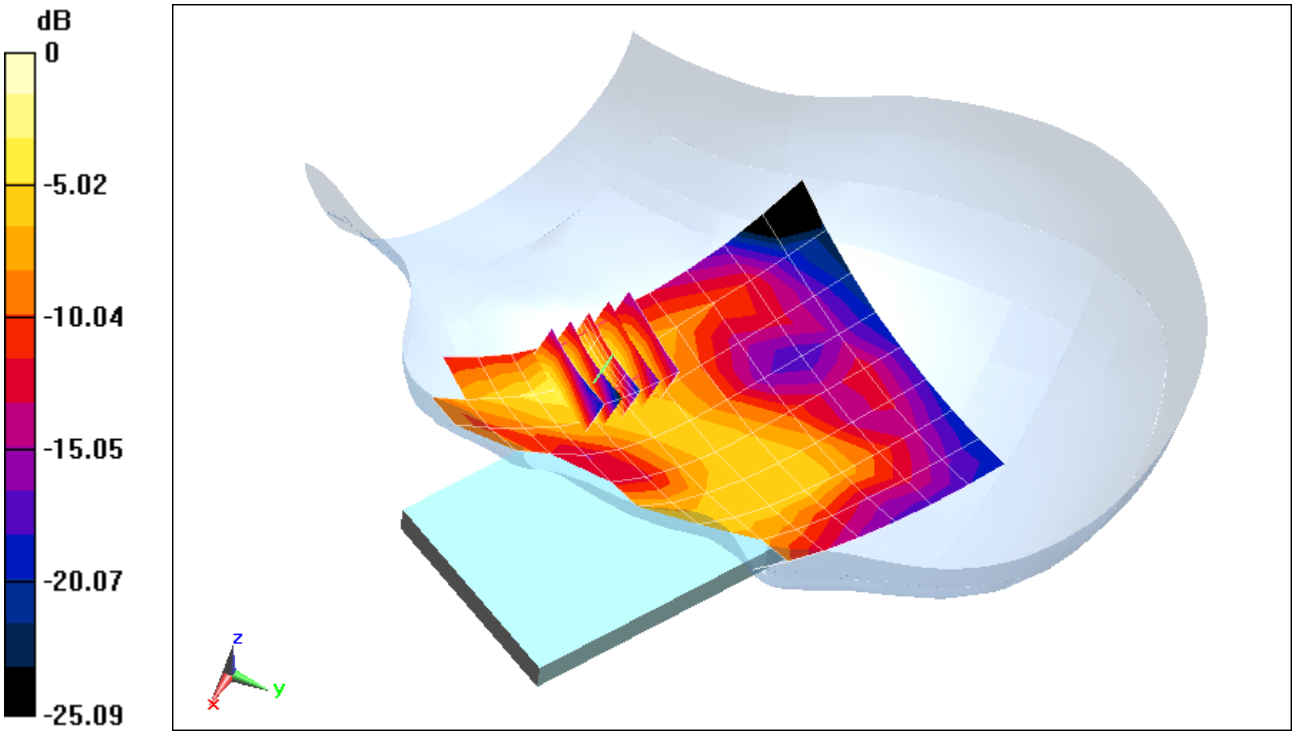

0 dB = 0.405 W/kg = -3.93 dBW/kg

PCTEST ENGINEERING LABORATORY, INC.

DUT: A3LSMN910R4; Type: Portable Handset; Serial: 33EDD

Communication System: UID 0, LTE Band 12; Frequency: 707.5 MHz;Duty Cycle: 1:1
Medium: 750 Head Medium parameters used (interpolated):
f = 707.5 MHz; σ = 0.877 S/m; ε_r = 41.631; ρ = 1000 kg/m^3
Phantom section: Right Section

Test Date: 09-01-2014; Ambient Temp: 24.0°C; Tissue Temp: 22.1°C

Probe: ES3DV3 - SN3263; ConvF(6.42, 6.42, 6.42); Calibrated: 5/15/2014;
Sensor-Surface: 3mm (Mechanical Surface Detection)
Electronics: DAE4 Sn859; Calibrated: 5/14/2014
Phantom: SAM v5.0 Left; Type: QD000P40CD; Serial: TP: 1687
Measurement SW: DASY52, Version 52.8 (8); SEMCAD X Version 14.6.10 (7331)

Mode: LTE Band 12, Right Head, Cheek, Mid.ch
10 MHz Bandwidth, QPSK, 1 RB, 25 RB Offset, Standard Cover

Area Scan (9x14x1): Measurement grid: dx=15mm, dy=15mm
Zoom Scan (5x5x7)/Cube 0: Measurement grid: dx=8mm, dy=8mm, dz=5mm
Reference Value = 11.62 V/m; Power Drift = 0.10 dB
Peak SAR (extrapolated) = 0.141 W/kg
SAR(1 g) = 0.105 W/kg

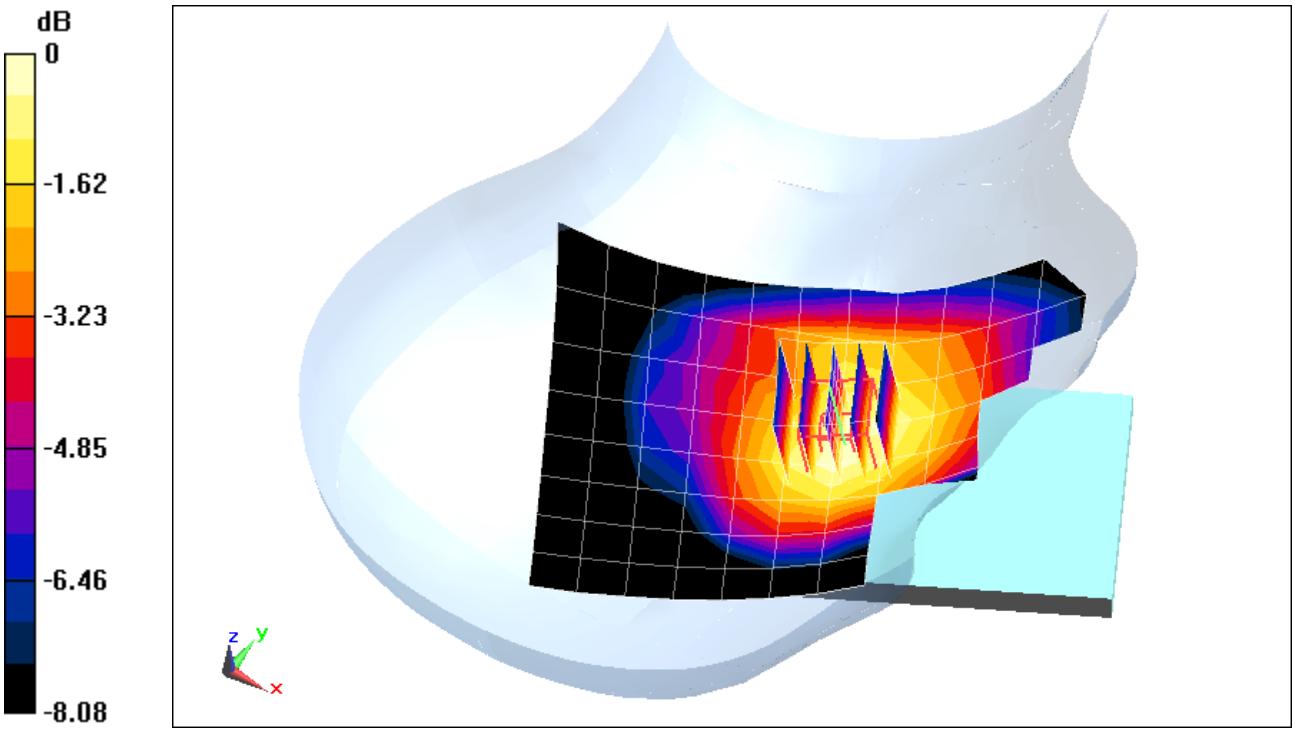

0 dB = 0.116 W/kg = -9.36 dBW/kg

PCTEST ENGINEERING LABORATORY, INC.

DUT: A3LMN910R4; Type: Portable Handset; Serial: 33EE3

Communication System: UID 0, LTE Band 5 (Cell.); Frequency: 836.5 MHz;Duty Cycle: 1:1
Medium: 835 Head Medium parameters used (interpolated):
f = 836.5 MHz; σ = 0.936 S/m; ε_r = 42.447; ρ = 1000 kg/m^3
Phantom section: Right Section

Test Date: 09-08-2014; Ambient Temp: 24.8°C; Tissue Temp: 22.8°C

Probe: ES3DV3 - SN3319; ConvF(6.27, 6.27, 6.27); Calibrated: 4/17/2014;
Sensor-Surface: 3mm (Mechanical Surface Detection)
Electronics: DAE4 Sn1368; Calibrated: 4/11/2014
Phantom: SAM; Type: QD000P40CD; Serial: TP:1758
Measurement SW: DASY52, Version 52.8 (8); SEMCAD X Version 14.6.10 (7331)

Mode: LTE Band 5 (Cell.), Right Head, Cheek, Mid.ch,
10 MHz Bandwidth, QPSK, 1 RB, 49 RB Offset, Wireless Charging Cover

Area Scan (9x15x1): Measurement grid: dx=15mm, dy=15mm
Zoom Scan (5x5x7)/Cube 0: Measurement grid: dx=8mm, dy=8mm, dz=5mm
Reference Value = 12.97 V/m; Power Drift = 0.03 dB
Peak SAR (extrapolated) = 0.193 W/kg
SAR(1 g) = 0.138 W/kg

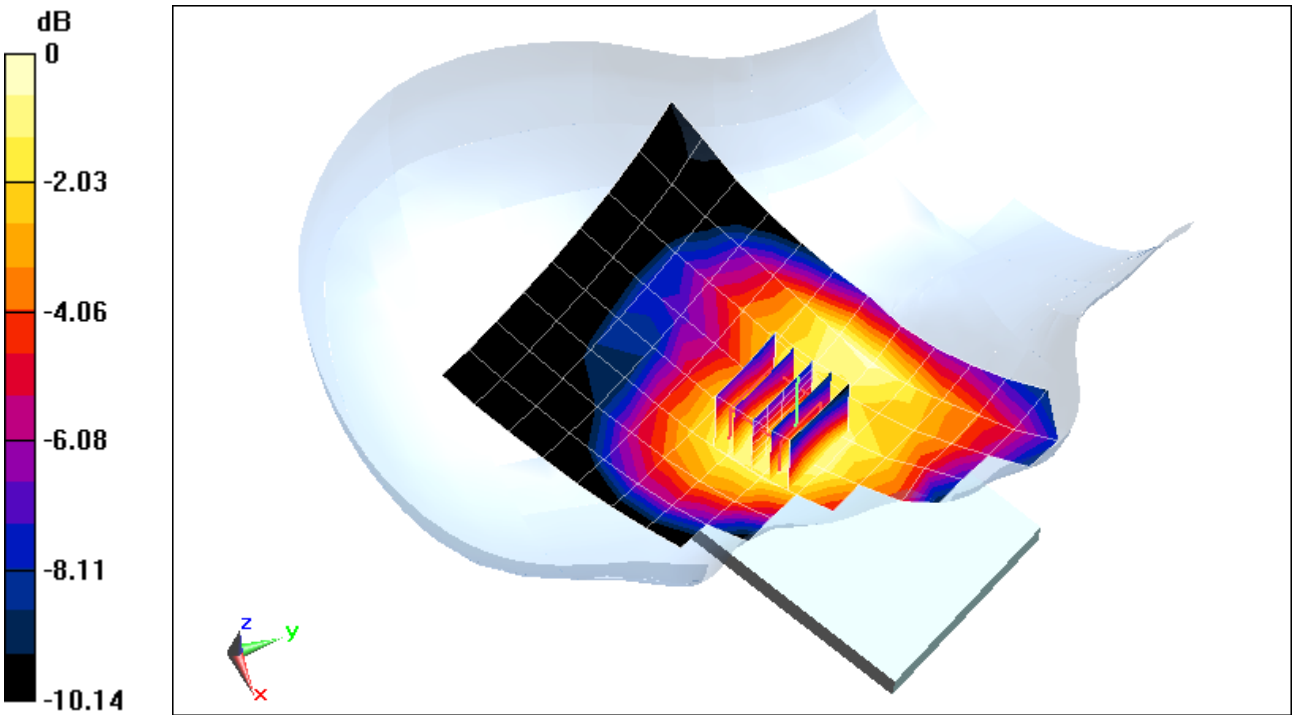

0 dB = 0.155 W/kg = -8.10 dBW/kg

PCTEST ENGINEERING LABORATORY, INC.

DUT: A3LSMN910R4; Type: Portable Handset; Serial: 33ECE

Communication System: UID 0, LTE Band 4 (AWS) (0); Frequency: 1732.5 MHz;Duty Cycle: 1:1
Medium: 1750 Head Medium parameters used (interpolated):
f = 1732.5 MHz; σ = 1.328 S/m; ε_r = 40.332; ρ = 1000 kg/m^3
Phantom section: Left Section

Test Date: 09-02-2014; Ambient Temp: 23.4°C; Tissue Temp: 22.7°C

Probe: ES3DV3 - SN3258; ConvF(5.19, 5.19, 5.19); Calibrated: 2/25/2014;
Sensor-Surface: 3mm (Mechanical Surface Detection)
Electronics: DAE4 Sn665; Calibrated: 2/26/2014
Phantom: SAM Front; Type: SAM; Serial: 1686
Measurement SW: DASY52, Version 52.8 (8); SEMCAD X Version 14.6.10 (7331)

Mode: LTE Band 4 (AWS), Left Head, Tilt, Mid.ch,
20 MHz Bandwidth, QPSK, 1 RB, 0 RB Offset, Wireless Charging Cover

Area Scan (9x14x1): Measurement grid: dx=15mm, dy=15mm
Zoom Scan (5x5x7)/Cube 0: Measurement grid: dx=8mm, dy=8mm, dz=5mm
Reference Value = 8.541 V/m; Power Drift = 0.15 dB
Peak SAR (extrapolated) = 0.195 W/kg
SAR(1 g) = 0.104 W/kg

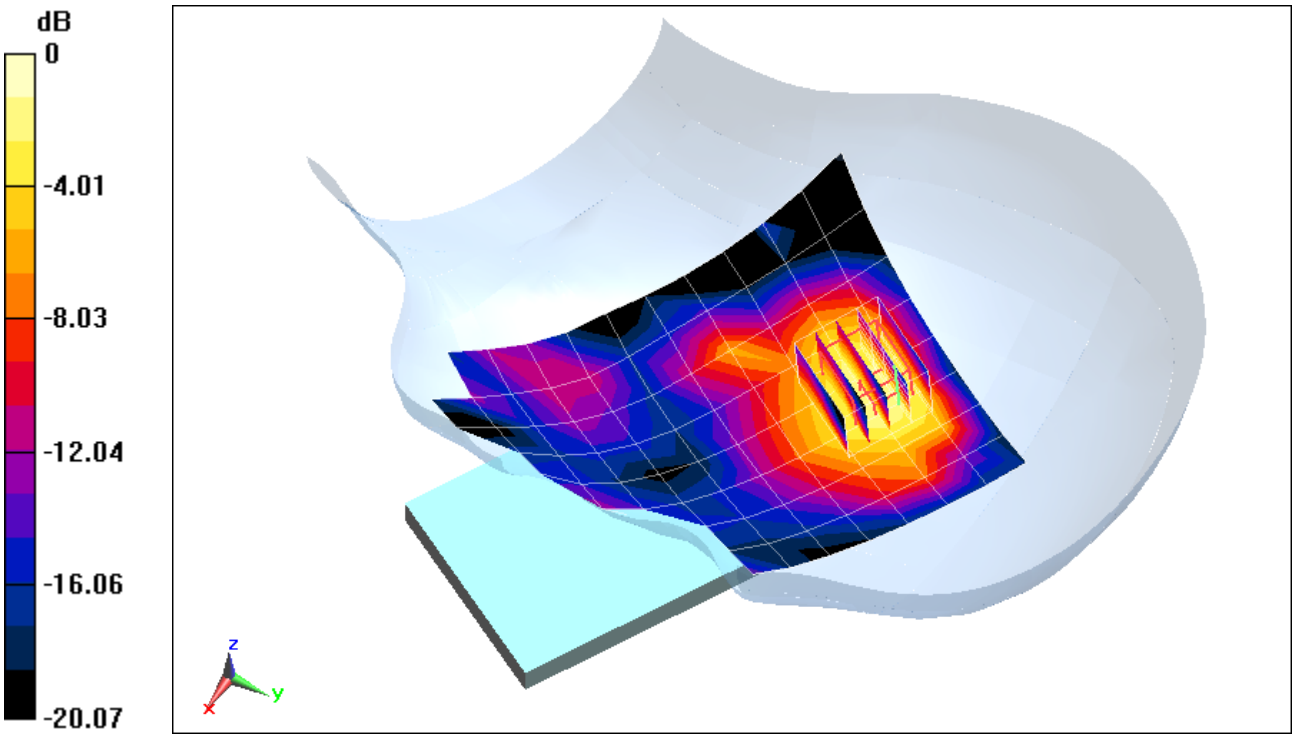

0 dB = 0.129 W/kg = -8.89 dBW/kg

PCTEST ENGINEERING LABORATORY, INC.

DUT: A3LSMN910R4; Type: Portable Handset; Serial: 33EDE

Communication System: UID 0, LTE Band 2 (PCS); Frequency: 1860 MHz;Duty Cycle: 1:1
Medium: 1900 Head Medium parameters used (interpolated):
f = 1860 MHz; σ = 1.413 S/m; ε_r = 39.886; ρ = 1000 kg/m^3
Phantom section: Right Section

Test Date: 09-08-2014; Ambient Temp: 23.6°C; Tissue Temp: 22.4°C

Probe: ES3DV2 - SN3022; ConvF(4.85, 4.85, 4.85); Calibrated: 8/19/2014;
Sensor-Surface: 3mm (Mechanical Surface Detection)
Electronics: DAE4 Sn1322; Calibrated: 8/12/2014
Phantom: SAM with CRP v4.0; Type: QD000P40CD; Serial: TP:1800
Measurement SW: DASY52, Version 52.8 (8); SEMCAD X Version 14.6.10 (7331)

Mode: LTE Band 2 (PCS), Right Head, Cheek, Low.ch
20 MHz Bandwidth, QPSK, 1 RB, 99 RB Offset, Standard Cover

Area Scan (9x14x1): Measurement grid: dx=15mm, dy=15mm
Zoom Scan (5x5x7)/Cube 0: Measurement grid: dx=8mm, dy=8mm, dz=5mm
Reference Value = 13.51 V/m; Power Drift = -0.02 dB
Peak SAR (extrapolated) = 0.319 W/kg
SAR(1 g) = 0.194 W/kg

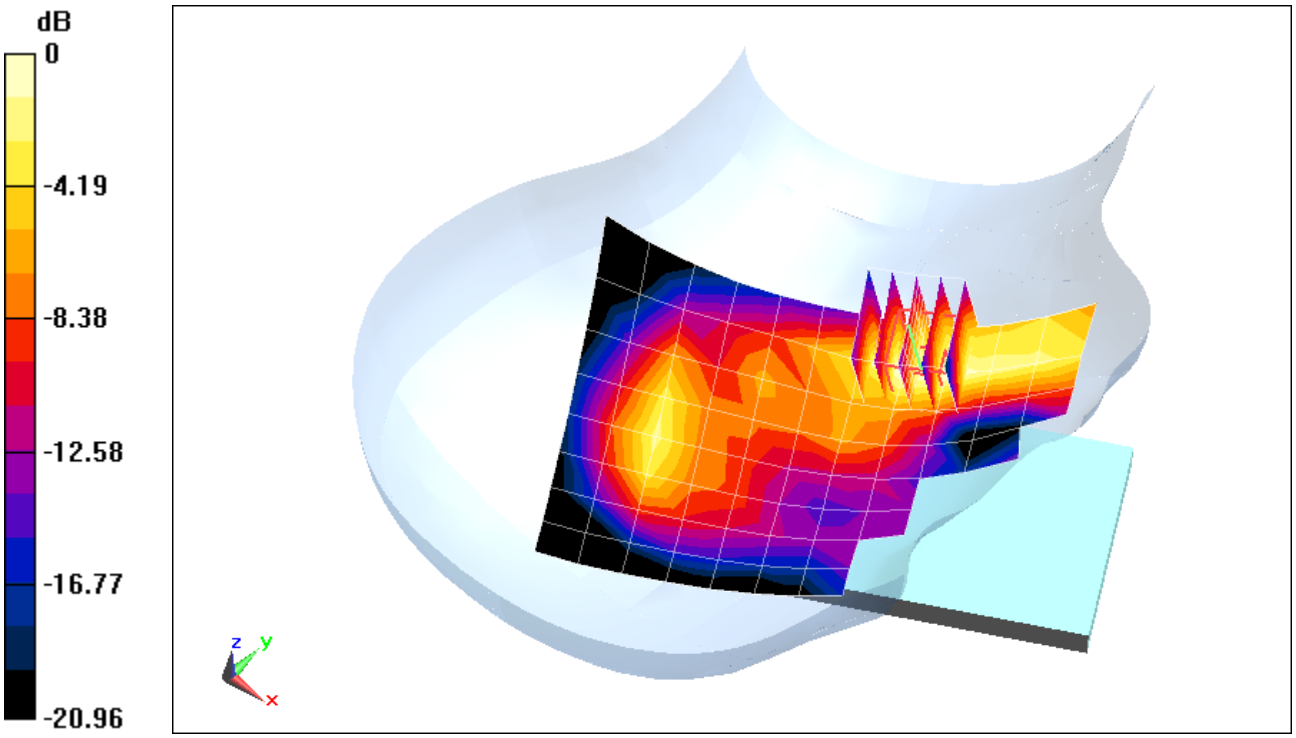

0 dB = 0.239 W/kg = -6.22 dBW/kg

PCTEST ENGINEERING LABORATORY, INC.

DUT: A3LSMN910R4; Type: Portable Handset; Serial: 01FC3

Communication System: UID 0, IEEE 802.11b; Frequency: 2462 MHz; Duty Cycle: 1:1
Medium: 2450 Head Medium parameters used (interpolated):
f = 2462 MHz; σ = 1.872 S/m; ε_r = 38.098; ρ = 1000 kg/m^3
Phantom section: Right Section

Test Date: 08-28-2014; Ambient Temp: 24.1°C; Tissue Temp: 22.2°C

Probe: ES3DV3 - SN3258; ConvF(4.52, 4.52, 4.52); Calibrated: 2/25/2014;
Sensor-Surface: 3mm (Mechanical Surface Detection)
Electronics: DAE4 Sn665; Calibrated: 2/26/2014
Phantom: SAM Front; Type: SAM; Serial: 1686
Measurement SW: DASY52, Version 52.8 (8); SEMCAD X Version 14.6.10 (7331)

Mode: IEEE 802.11b, Right Head, Cheek, Ch 11, 1 Mbps, Antenna 2, Standard Cover

Area Scan (11x18x1): Measurement grid: dx=12mm, dy=12mm
Zoom Scan (7x7x7)/Cube 0: Measurement grid: dx=5mm, dy=5mm, dz=5mm
Reference Value = 20.063 V/m; Power Drift = -0.05 dB
Peak SAR (extrapolated) = 1.48 W/kg
SAR(1 g) = 0.573 W/kg

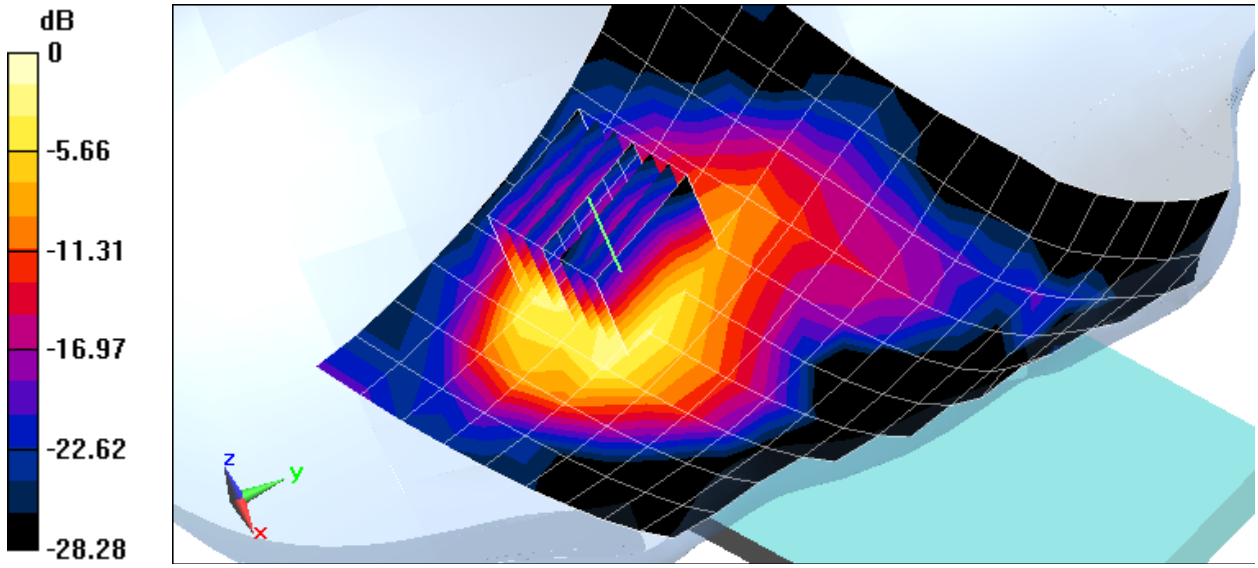

0 dB = 0.808 W/kg = -0.93 dBW/kg

PCTEST ENGINEERING LABORATORY, INC.

DUT: A3LSMN910R4; Type: Portable Handset; Serial: 015D8

Communication System: UID 0, IEEE 802.11n; Frequency: 5745 MHz; Duty Cycle: 1:1
Medium: 5 GHz Head Medium parameters used:
f = 5745 MHz; σ = 5.306 S/m; ε_r = 34.78; ρ = 1000 kg/m^3
Phantom section: Right Section

Test Date: 08-12-2014; Ambient Temp: 24.2°C; Tissue Temp: 22.9°C

Probe: EX3DV4 - SN3914; ConvF(4.52, 4.52, 4.52); Calibrated: 10/23/2013;
Sensor-Surface: 1.4mm (Mechanical Surface Detection)
Electronics: DAE4 Sn1333; Calibrated: 11/19/2013
Phantom: SAM V5.0 Right; Type: QD000P40CD; Serial: 1647
Measurement SW: DASY52, Version 52.8 (8); SEMCAD X Version 14.6.10 (7331)

Mode: IEEE 802.11n, 5.8 GHz, Right Head, Cheek, Ch 149, 13 Mbps, MIMO, Standard Cover

Area Scan (13x22x1): Measurement grid: dx=10mm, dy=10mm
Zoom Scan (7x7x7)/Cube 0: Measurement grid: dx=4mm, dy=4mm, dz=1.4mm; Graded Ratio: 1.4
Reference Value = 2.082 V/m; Power Drift = 0.12 dB
Peak SAR (extrapolated) = 0.840 W/kg
SAR(1 g) = 0.169 W/kg

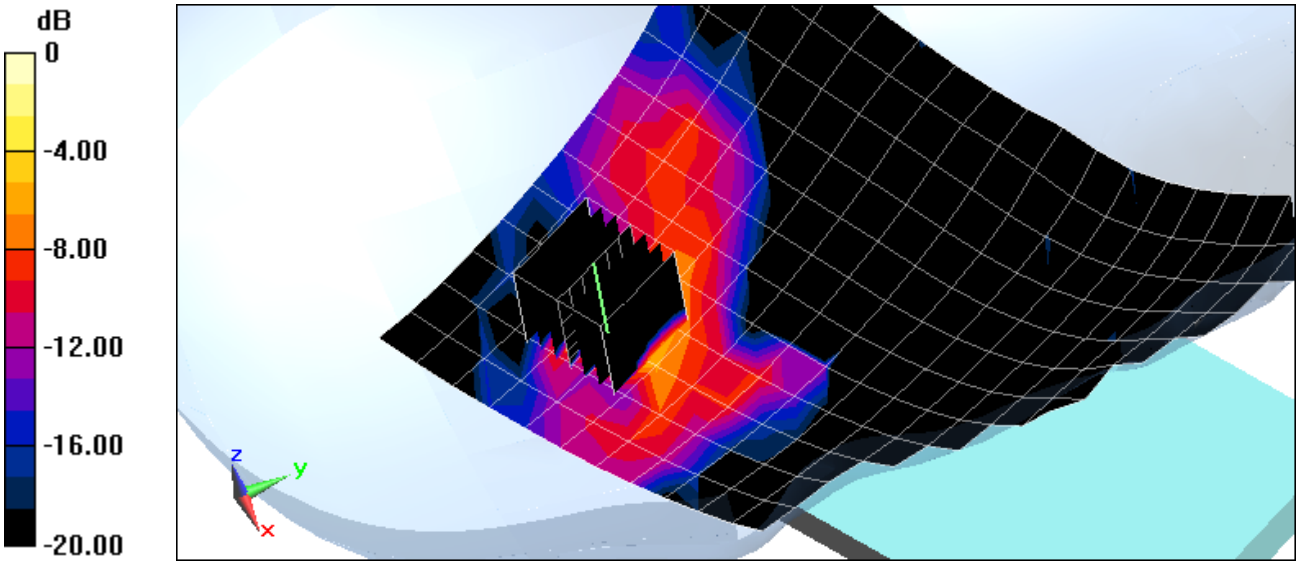

0 dB = 0.515 W/kg = -2.88 dBW/kg

PCTEST ENGINEERING LABORATORY, INC.

DUT: A3LSMN910R4; Type: Portable Handset; Serial: 015D8

Communication System: UID 0, IEEE 802.11n; Frequency: 5680 MHz; Duty Cycle: 1:1
Medium: 5 GHz Head Medium parameters used:
f = 5680 MHz; σ = 5.205 S/m; ε_r = 34.89; ρ = 1000 kg/m^3
Phantom section: Right Section

Test Date: 08-12-2014; Ambient Temp: 24.2°C; Tissue Temp: 22.9°C

Probe: EX3DV4 - SN3914; ConvF(4.37, 4.37, 4.37); Calibrated: 10/23/2013;
Sensor-Surface: 1.4mm (Mechanical Surface Detection)
Electronics: DAE4 Sn1333; Calibrated: 11/19/2013
Phantom: SAM V5.0 Right; Type: QD000P40CD; Serial: 1647
Measurement SW: DASY52, Version 52.8 (8); SEMCAD X Version 14.6.10 (7331)

Mode: IEEE 802.11n, 5.5 - 5.7 GHz, Right Head, Cheek, Ch 136, 13 Mbps, MIMO, Wireless Charging Cover

Area Scan (13x19x1): Measurement grid: dx=10mm, dy=10mm
Zoom Scan (7x7x7)/Cube 0: Measurement grid: dx=4mm, dy=4mm, dz=1.4mm; Graded Ratio: 1.4
Reference Value = 7.391 V/m; Power Drift = 0.08 dB
Peak SAR (extrapolated) = 0.966 W/kg
SAR(1 g) = 0.212 W/kg

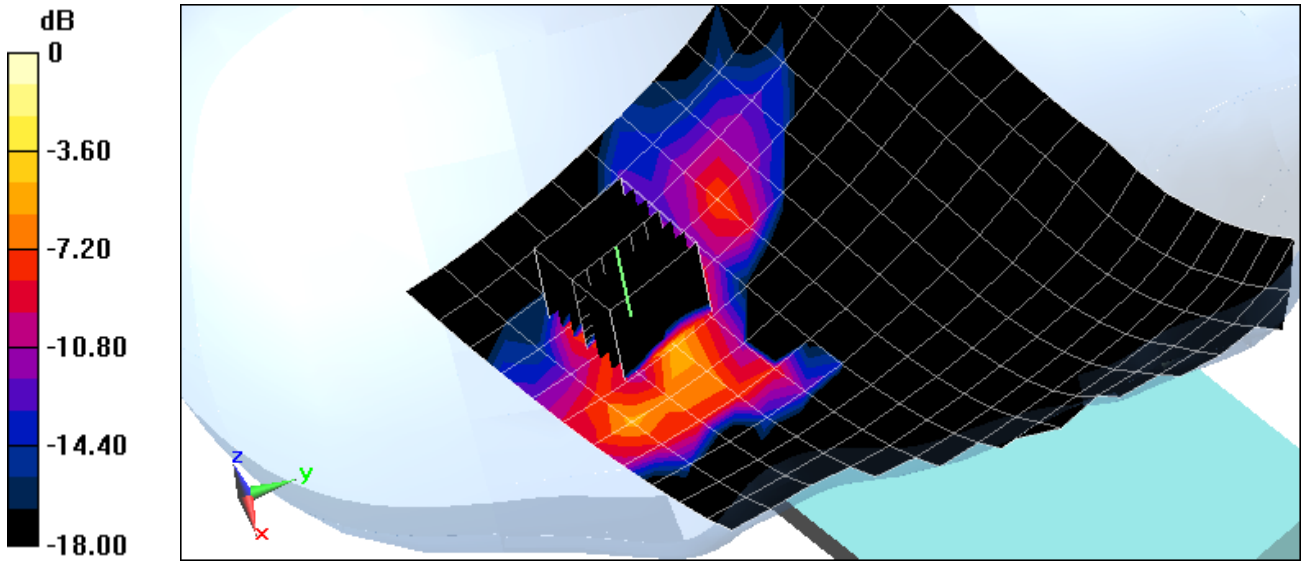

0 dB = 0.603 W/kg = -2.20 dBW/kg

PCTEST ENGINEERING LABORATORY, INC.

DUT: A3LSMN910R4; Type: Portable Handset; Serial: 33ED6

Communication System: UID 0, CDMA; Frequency: 836.52 MHz;Duty Cycle: 1:1
Medium: 835 Body Medium parameters used (interpolated):
f = 836.52 MHz; σ = 1.017 S/m; ε_r = 54.2; ρ = 1000 kg/m^3
Phantom section: Flat Section; Space: 1.5 cm

Test Date: 09-08-2014; Ambient Temp: 23.8°C; Tissue Temp: 23.5°C

Probe: ES3DV3 - SN3263; ConvF(6.16, 6.16, 6.16); Calibrated: 5/15/2014;
Sensor-Surface: 3mm (Mechanical Surface Detection)
Electronics: DAE4 Sn859; Calibrated: 5/14/2014
Phantom: SAM v5.0 front; Type: QD000P40CD; Serial: TP-1646
Measurement SW: DASY52, Version 52.8 (8); SEMCAD X Version 14.6.10 (7331)

Mode: Cell. CDMA, Body SAR, Back side, Mid.ch, Standard Cover

Area Scan (9x14x1): Measurement grid: dx=15mm, dy=15mm
Zoom Scan (5x5x7)/Cube 0: Measurement grid: dx=8mm, dy=8mm, dz=5mm
Reference Value = 21.13 V/m; Power Drift = -0.03 dB
Peak SAR (extrapolated) = 0.637 W/kg
SAR(1 g) = 0.439 W/kg

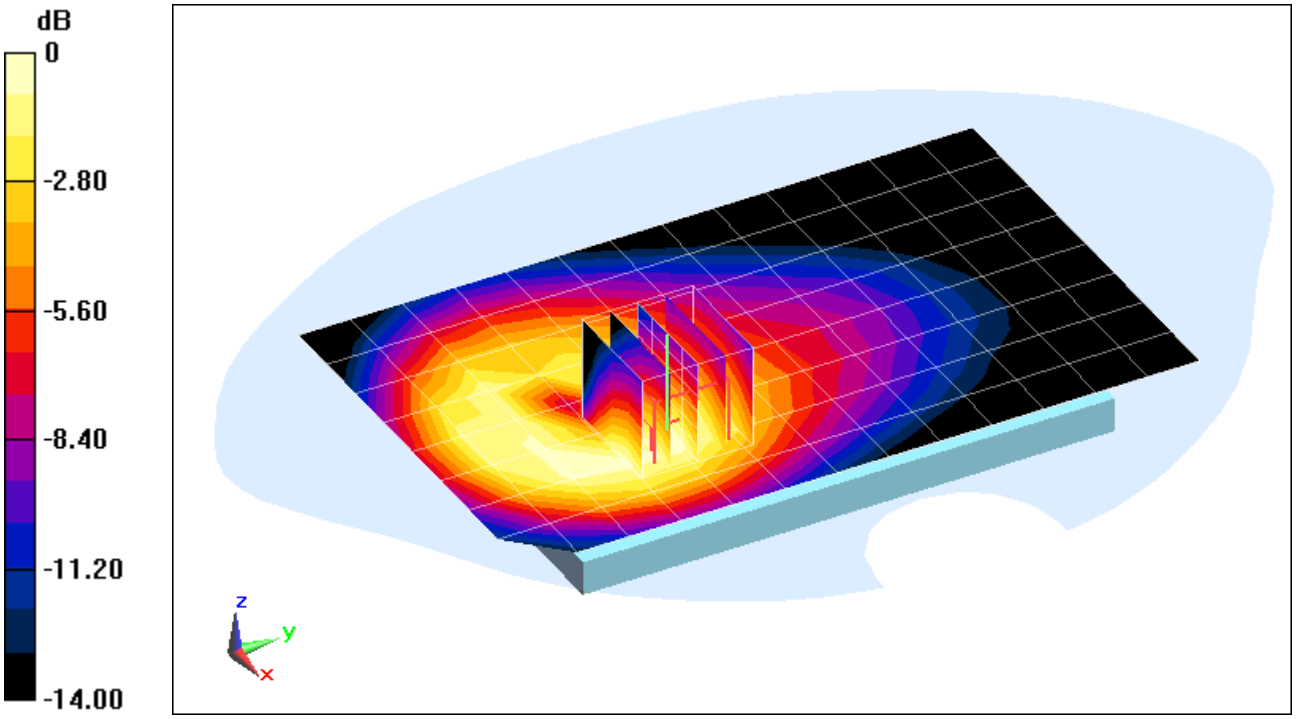

0 dB = 0.506 W/kg = -2.96 dBW/kg

PCTEST ENGINEERING LABORATORY, INC.

DUT: A3LSMN910R4; Type: Portable Handset; Serial: 33ED2

Communication System: UID 0, CDMA; Frequency: 836.52 MHz;Duty Cycle: 1:1
Medium: 835 Body Medium parameters used (interpolated):
f = 836.52 MHz; σ = 1.006 S/m; ε_r = 53.265; ρ = 1000 kg/m^3
Phantom section: Flat Section; Space: 1.0 cm

Test Date: 09-03-2014; Ambient Temp: 24.0°C; Tissue Temp: 22.1°C

Probe: ES3DV3 - SN3263; ConvF(6.16, 6.16, 6.16); Calibrated: 5/15/2014;
Sensor-Surface: 3mm (Mechanical Surface Detection)
Electronics: DAE4 Sn859; Calibrated: 5/14/2014
Phantom: SAM v5.0 front; Type: QD000P40CD; Serial: TP-1646
Measurement SW: DASY52, Version 52.8 (8); SEMCAD X Version 14.6.10 (7331)

Mode: Cell. CDMA, Body SAR, Front side, Mid.ch, Standard Cover

Area Scan (9x14x1): Measurement grid: dx=15mm, dy=15mm
Zoom Scan (5x5x7)/Cube 0: Measurement grid: dx=8mm, dy=8mm, dz=5mm
Reference Value = 24.45 V/m; Power Drift = -0.02 dB
Peak SAR (extrapolated) = 0.897 W/kg
SAR(1 g) = 0.534 W/kg

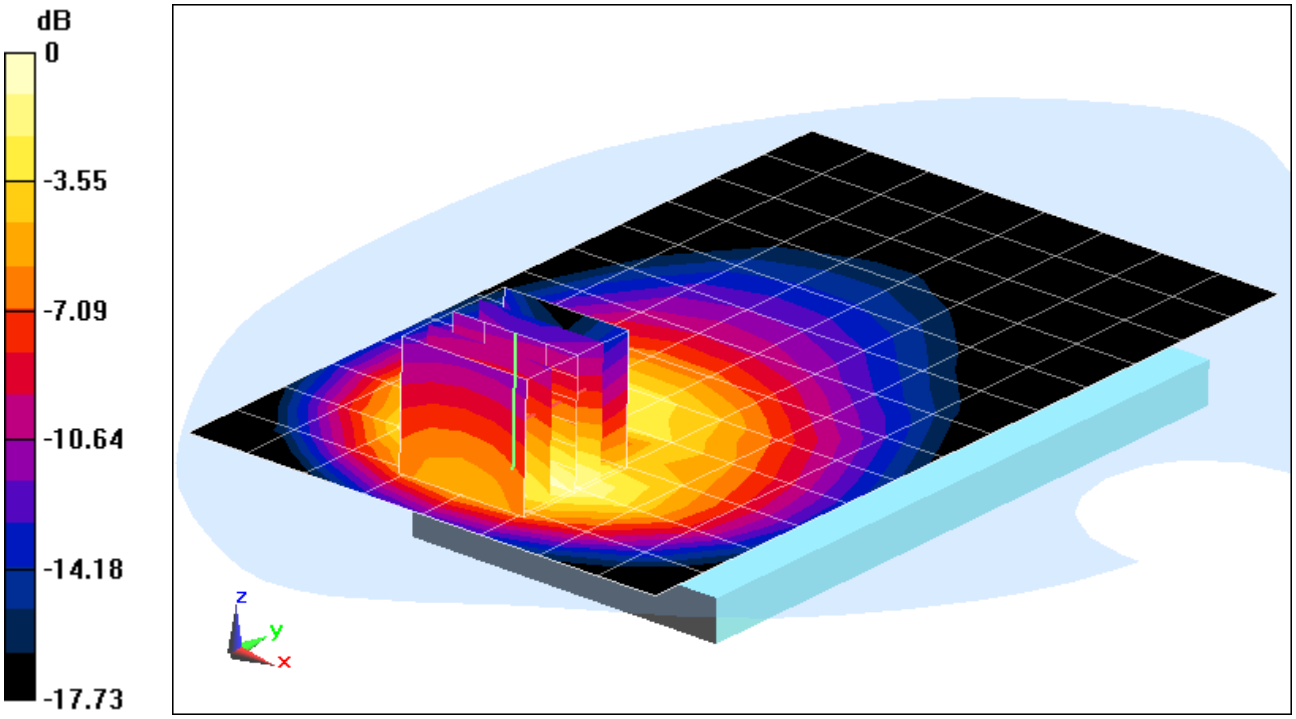

0 dB = 0.650 W/kg = -1.87 dBW/kg

PCTEST ENGINEERING LABORATORY, INC.

DUT: A3LSMN910R4; Type: Portable Handset; Serial: 33ED8

Communication System: UID 0, CDMA; Frequency: 1880 MHz;Duty Cycle: 1:1
Medium: 1900 Body Medium parameters used:
f = 1880 MHz; σ = 1.541 S/m; ε_r = 52.416; ρ = 1000 kg/m^3
Phantom section: Flat Section; Space: 1.5 cm

Test Date: 09-09-2014; Ambient Temp: 23.6°C; Tissue Temp: 23.2°C

Probe: ES3DV2 - SN3022; ConvF(4.49, 4.49, 4.49); Calibrated: 8/19/2014;
Sensor-Surface: 3mm (Mechanical Surface Detection)
Electronics: DAE4 Sn1322; Calibrated: 8/12/2014
Phantom: ELI v5.0; Type: QDOVA001BB; Serial: 1226
Measurement SW: DASY52, Version 52.8 (8); SEMCAD X Version 14.6.10 (7331)

Mode: PCS CDMA, Body SAR, Back side, Mid.ch, Standard Cover

Area Scan (9x15x1): Measurement grid: dx=15mm, dy=15mm
Zoom Scan (5x5x7)/Cube 0: Measurement grid: dx=8mm, dy=8mm, dz=5mm
Reference Value = 24.47 V/m; Power Drift = -0.01 dB
Peak SAR (extrapolated) = 1.33 W/kg
SAR(1 g) = 0.871 W/kg

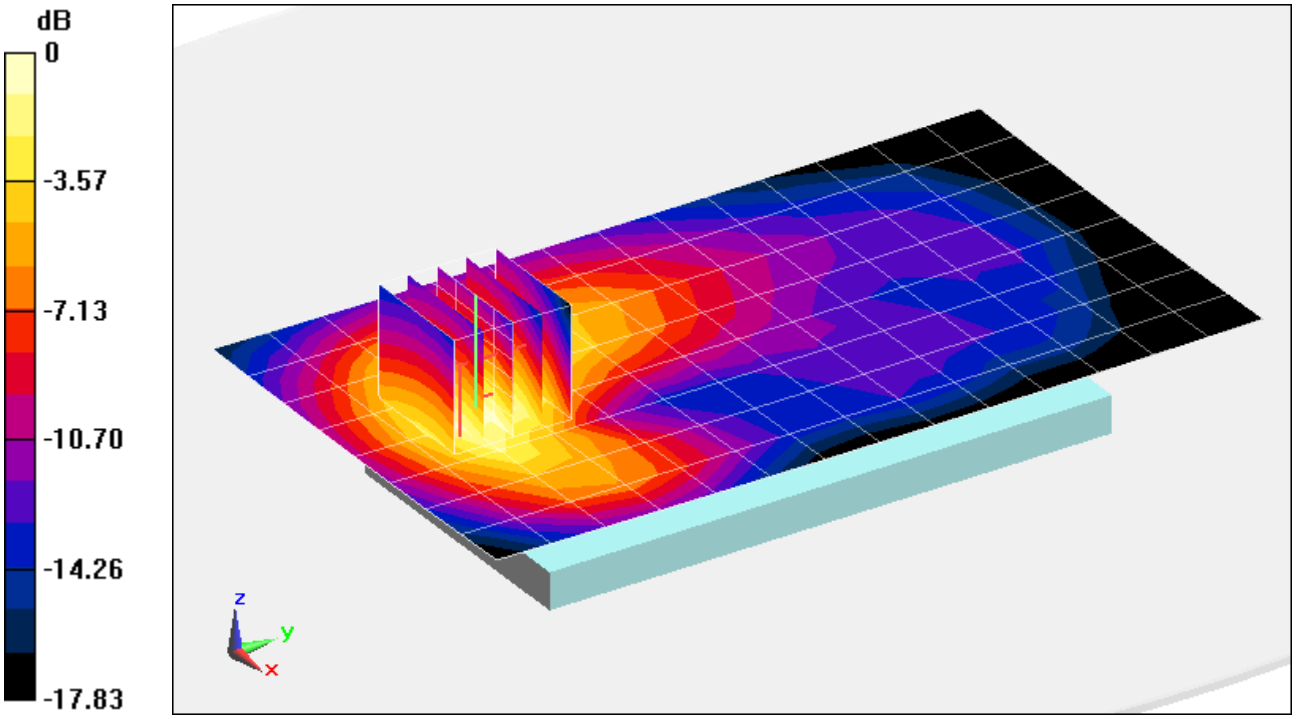

0 dB = 1.03 W/kg = 0.13 dBW/kg

PCTEST ENGINEERING LABORATORY, INC.

DUT: A3LSMN910R4; Type: Portable Handset; Serial: 33ED2

Communication System: UID 0, CDMA; Frequency: 1880 MHz;Duty Cycle: 1:1
Medium: 1900 Body Medium parameters used:
f = 1880 MHz; σ = 1.511 S/m; ε_r = 52.829; ρ = 1000 kg/m^3
Phantom section: Flat Section; Space: 1.0 cm

Test Date: 09-02-2014; Ambient Temp: 21.2°C; Tissue Temp: 21.9°C

Probe: ES3DV3 - SN3332; ConvF(4.7, 4.7, 4.7); Calibrated: 11/25/2013;
Sensor-Surface: 3mm (Mechanical Surface Detection)
Electronics: DAE4 Sn1407; Calibrated: 11/18/2013
Phantom: ELI v5.0; Type: QDOVA001BB; Serial: 1226
Measurement SW: DASY52, Version 52.8 (8); SEMCAD X Version 14.6.10 (7331)

Mode: PCS EVDO Rev. 0, Body SAR, Bottom Edge, Mid.ch, Wireless Charging Cover

Area Scan (10x7x1): Measurement grid: dx=5mm, dy=15mm
Zoom Scan (5x5x7)/Cube 0: Measurement grid: dx=8mm, dy=8mm, dz=5mm
Reference Value = 17.43 V/m; Power Drift = -0.03 dB
Peak SAR (extrapolated) = 0.661 W/kg
SAR(1 g) = 0.399 W/kg

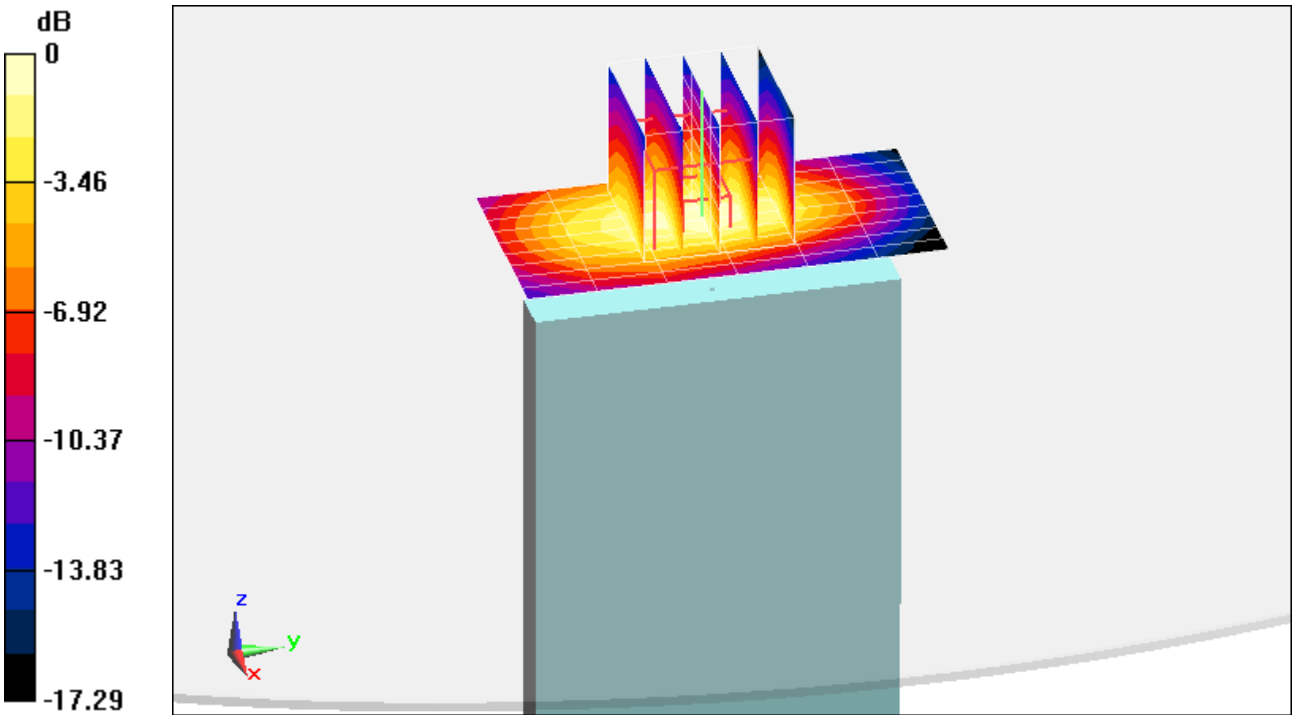

0 dB = 0.490 W/kg = -3.10 dBW/kg

PCTEST ENGINEERING LABORATORY, INC.

DUT: A3LSMN910R4; Type: Portable Handset; Serial: 33EDD

Communication System: UID 0, LTE Band 12; Frequency: 707.5 MHz;Duty Cycle: 1:1
Medium: 750 Body Medium parameters used (interpolated):
f = 707.5 MHz; σ = 0.935 S/m; ε_r = 54.858; ρ = 1000 kg/m^3
Phantom section: Flat Section; Space: 1.5 cm

Test Date: 09-09-2014; Ambient Temp: 24.5°C; Tissue Temp: 24.0°C

Probe: ES3DV3 - SN3209; ConvF(6.16, 6.16, 6.16); Calibrated: 3/19/2014;
Sensor-Surface: 3mm (Mechanical Surface Detection)
Electronics: DAE4 Sn1334; Calibrated: 3/17/2014
Phantom: SAM front; Type: QD000P40CD; Serial: TP:1759
Measurement SW: DASY52, Version 52.8 (8); SEMCAD X Version 14.6.10 (7331)

Mode: LTE Band 12, Body SAR, Back Side, Mid.ch,
10 MHz Bandwidth, QPSK, 1 RB, 25 RB Offset, Standard Cover

Area Scan (9x14x1): Measurement grid: dx=15mm, dy=15mm
Zoom Scan (5x5x7)/Cube 0: Measurement grid: dx=8mm, dy=8mm, dz=5mm
Reference Value = 11.65 V/m; Power Drift = -0.01 dB
Peak SAR (extrapolated) = 0.147 W/kg
SAR(1 g) = 0.120 W/kg

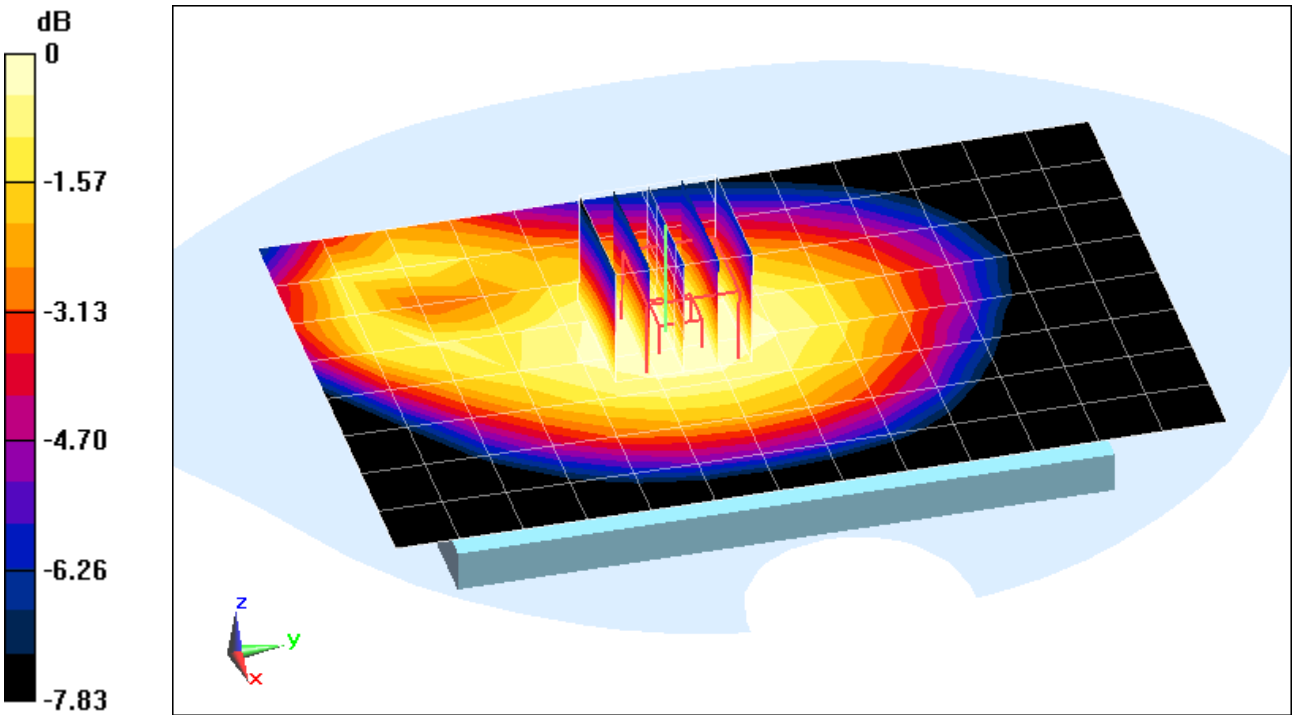

0 dB = 0.131 W/kg = -8.83 dBW/kg

PCTEST ENGINEERING LABORATORY, INC.

DUT: A3LSMN910R4; Type: Portable Handset; Serial: 33EDD

Communication System: UID 0, LTE Band 12; Frequency: 707.5 MHz;Duty Cycle: 1:1
Medium: 750 Body Medium parameters used (interpolated):
f = 707.5 MHz; σ = 0.925 S/m; ε_r = 54.696; ρ = 1000 kg/m^3
Phantom section: Flat Section; Space: 1.0 cm

Test Date: 08-31-2014; Ambient Temp: 22.9°C; Tissue Temp: 22.1°C

Probe: ES3DV3 - SN3209; ConvF(6.16, 6.16, 6.16); Calibrated: 3/19/2014;
Sensor-Surface: 3mm (Mechanical Surface Detection)
Electronics: DAE4 Sn1334; Calibrated: 3/17/2014
Phantom: SAM front; Type: QD000P40CD; Serial: TP:1759
Measurement SW: DASY52, Version 52.8 (8); SEMCAD X Version 14.6.10 (7331)

Mode: LTE Band 12, Body SAR, Right Edge, Mid.ch,
10 MHz Bandwidth, QPSK, 1 RB, 25 RB Offset, Wireless Charging Cover

Area Scan (11x14x1): Measurement grid: dx=5mm, dy=15mm
Zoom Scan (6x6x7)/Cube 0: Measurement grid: dx=8mm, dy=8mm, dz=5mm
Reference Value = 16.65 V/m; Power Drift = 0.04 dB
Peak SAR (extrapolated) = 0.315 W/kg
SAR(1 g) = 0.233 W/kg

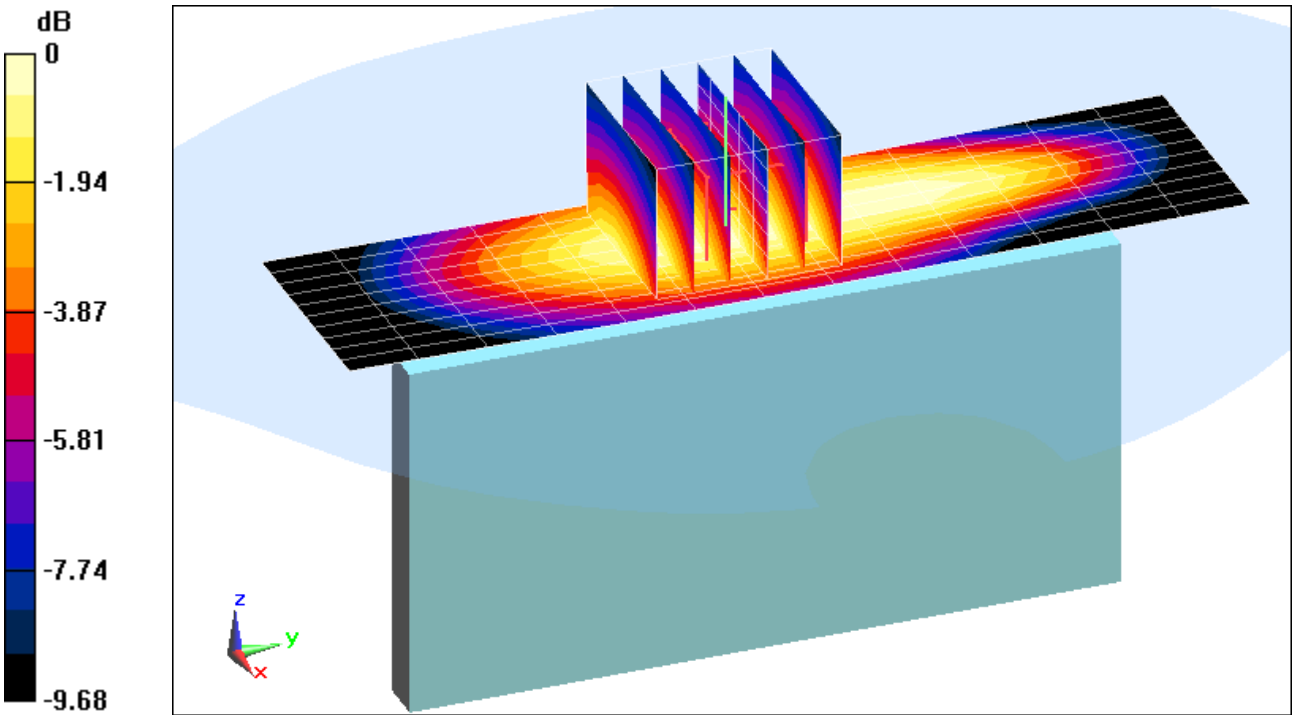

0 dB = 0.264 W/kg = -5.78 dBW/kg

PCTEST ENGINEERING LABORATORY, INC.

DUT: A3LSMN910R4; Type: Portable Handset; Serial: 33EE3

Communication System: UID 0, LTE Band 5; Frequency: 836.5 MHz;Duty Cycle: 1:1
Medium: 835 Body Medium parameters used (interpolated):
f = 836.5 MHz; σ = 1.006 S/m; ε_r = 53.265; ρ = 1000 kg/m^3
Phantom section: Flat Section; Space: 1.5 cm

Test Date: 09-03-2014; Ambient Temp: 24.0°C; Tissue Temp: 22.1°C

Probe: ES3DV3 - SN3263; ConvF(6.16, 6.16, 6.16); Calibrated: 5/15/2014;
Sensor-Surface: 3mm (Mechanical Surface Detection)
Electronics: DAE4 Sn859; Calibrated: 5/14/2014
Phantom: SAM v5.0 front; Type: QD000P40CD; Serial: TP-1646
Measurement SW: DASY52, Version 52.8 (8); SEMCAD X Version 14.6.10 (7331)

Mode: LTE Band 5 (Cell.), Body SAR, Back side, Mid.ch,
10 MHz Bandwidth, QPSK, 1 RB, 49 RB Offset, Standard Cover

Area Scan (9x14x1): Measurement grid: dx=15mm, dy=15mm
Zoom Scan (5x5x7)/Cube 0: Measurement grid: dx=8mm, dy=8mm, dz=5mm
Reference Value = 12.29 V/m; Power Drift = -0.06 dB
Peak SAR (extrapolated) = 0.200 W/kg
SAR(1 g) = 0.135 W/kg

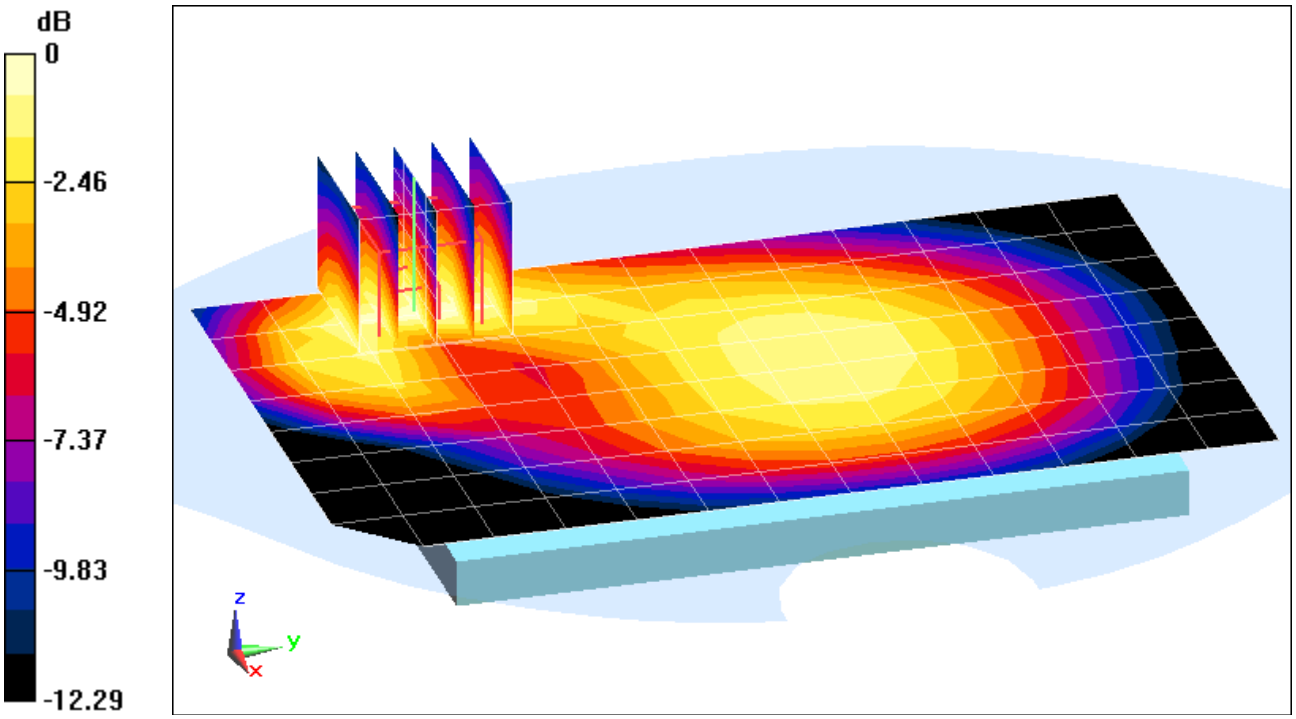

0 dB = 0.158 W/kg = -8.01 dBW/kg

PCTEST ENGINEERING LABORATORY, INC.

DUT: A3LSMN910R4; Type: Portable Handset; Serial: 33EE3

Communication System: UID 0, LTE Band 5 (Cell.); Frequency: 836.5 MHz;Duty Cycle: 1:1
Medium: 835 Body Medium parameters used (interpolated):
f = 836.5 MHz; σ = 1.006 S/m; ε_r = 53.265; ρ = 1000 kg/m^3
Phantom section: Flat Section; Space: 1.0 cm

Test Date: 09-03-2014; Ambient Temp: 24.0°C; Tissue Temp: 22.1°C

Probe: ES3DV3 - SN3263; ConvF(6.16, 6.16, 6.16); Calibrated: 5/15/2014;
Sensor-Surface: 3mm (Mechanical Surface Detection)
Electronics: DAE4 Sn859; Calibrated: 5/14/2014
Phantom: SAM v5.0 front; Type: QD000P40CD; Serial: TP-1646
Measurement SW: DASY52, Version 52.8 (8); SEMCAD X Version 14.6.10 (7331)

Mode: LTE Band 5 (Cell.), Body SAR, Right Edge, Mid.ch,
10 MHz Bandwidth, QPSK, 1 RB, 49 RB Offset, Wireless Charging Cover

Area Scan (13x14x1): Measurement grid: dx=5mm, dy=15mm
Zoom Scan (5x5x7)/Cube 0: Measurement grid: dx=8mm, dy=8mm, dz=5mm
Reference Value = 19.57 V/m; Power Drift = 0.01 dB
Peak SAR (extrapolated) = 0.565 W/kg
SAR(1 g) = 0.343 W/kg

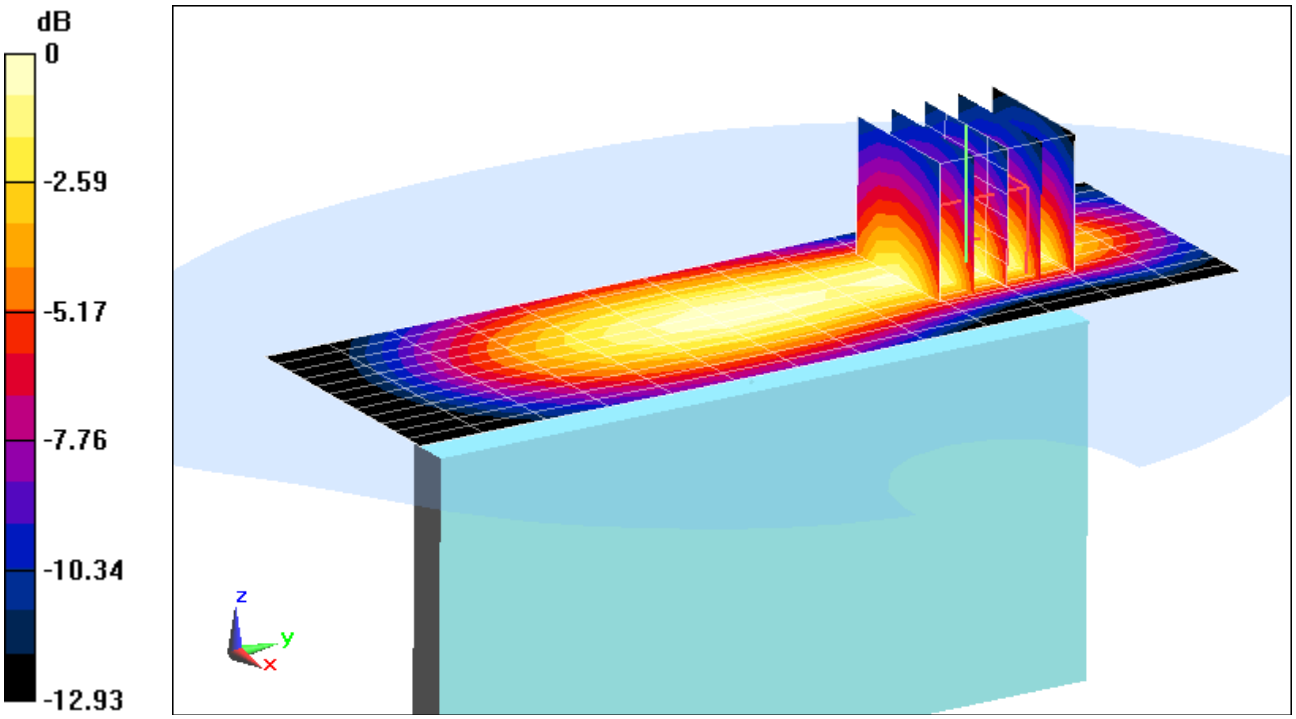

0 dB = 0.415 W/kg = -3.82 dBW/kg

PCTEST ENGINEERING LABORATORY, INC.

DUT: A3LSMN910R4; Type: Portable Handset; Serial: 33ECE

Communication System: UID 0, LTE Band 4 (AWS); Frequency: 1732.5 MHz;Duty Cycle: 1:1
Medium: 1750 Body Medium parameters used (interpolated):
f = 1732.5 MHz; σ = 1.413 S/m; ε_r = 52.196; ρ = 1000 kg/m^3
Phantom section: Flat Section; Space: 1.5 cm

Test Date: 09-05-2014; Ambient Temp: 23.8°C; Tissue Temp: 21.7°C

Probe: ES3DV3 - SN3287; ConvF(4.93, 4.93, 4.93); Calibrated: 11/20/2013;
Sensor-Surface: 3mm (Mechanical Surface Detection)
Electronics: DAE4 Sn1408; Calibrated: 11/19/2013
Phantom: ELI v5.0; Type: QDOVA001BB; Serial: 1229
Measurement SW: DASY52, Version 52.8 (8); SEMCAD X Version 14.6.10 (7331)

Mode: LTE Band 4 (AWS), Body SAR, Back Side, Mid.ch,
20 MHz Bandwidth, QPSK, 1 RB, 0 RB Offset, Standard Cover

Area Scan (9x15x1): Measurement grid: dx=15mm, dy=15mm
Zoom Scan (5x5x7)/Cube 0: Measurement grid: dx=8mm, dy=8mm, dz=5mm
Reference Value = 10.20 V/m; Power Drift = -0.03 dB
Peak SAR (extrapolated) = 0.208 W/kg
SAR(1 g) = 0.128 W/kg

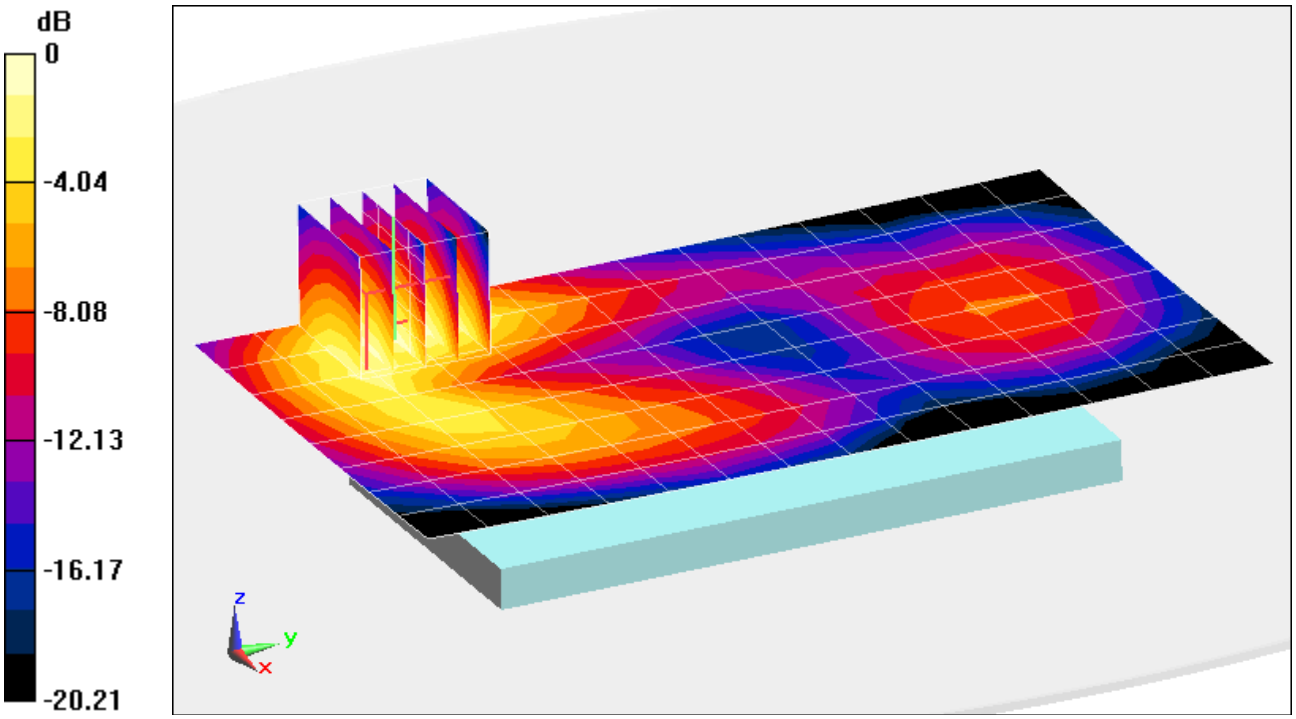

0 dB = 0.155 W/kg = -8.10 dBW/kg

PCTEST ENGINEERING LABORATORY, INC.

DUT: A3LSMN910R4; Type: Portable Handset; Serial: 33ECE

Communication System: UID 0, LTE Band 4 (AWS); Frequency: 1732.5 MHz;Duty Cycle: 1:1
Medium: 1750 Body Medium parameters used (interpolated):
f = 1732.5 MHz; σ = 1.413 S/m; ε_r = 52.196; ρ = 1000 kg/m^3
Phantom section: Flat Section; Space: 1.0 cm

Test Date: 09-05-2014; Ambient Temp: 23.8°C; Tissue Temp: 21.7°C

Probe: ES3DV3 - SN3287; ConvF(4.93, 4.93, 4.93); Calibrated: 11/20/2013;
Sensor-Surface: 3mm (Mechanical Surface Detection)
Electronics: DAE4 Sn1408; Calibrated: 11/19/2013
Phantom: ELI v5.0; Type: QDOVA001BB; Serial: 1229
Measurement SW: DASY52, Version 52.8 (8); SEMCAD X Version 14.6.10 (7331)

Mode: LTE Band 4 (AWS), Body SAR, Right Edge, Mid.ch,
20 MHz Bandwidth, QPSK, 1 RB, 0 RB Offset, Standard Cover

Area Scan (11x15x1): Measurement grid: dx=5mm, dy=15mm
Zoom Scan (5x5x7)/Cube 0: Measurement grid: dx=8mm, dy=8mm, dz=5mm
Reference Value = 19.03 V/m; Power Drift = -0.03 dB
Peak SAR (extrapolated) = 0.773 W/kg
SAR(1 g) = 0.431 W/kg

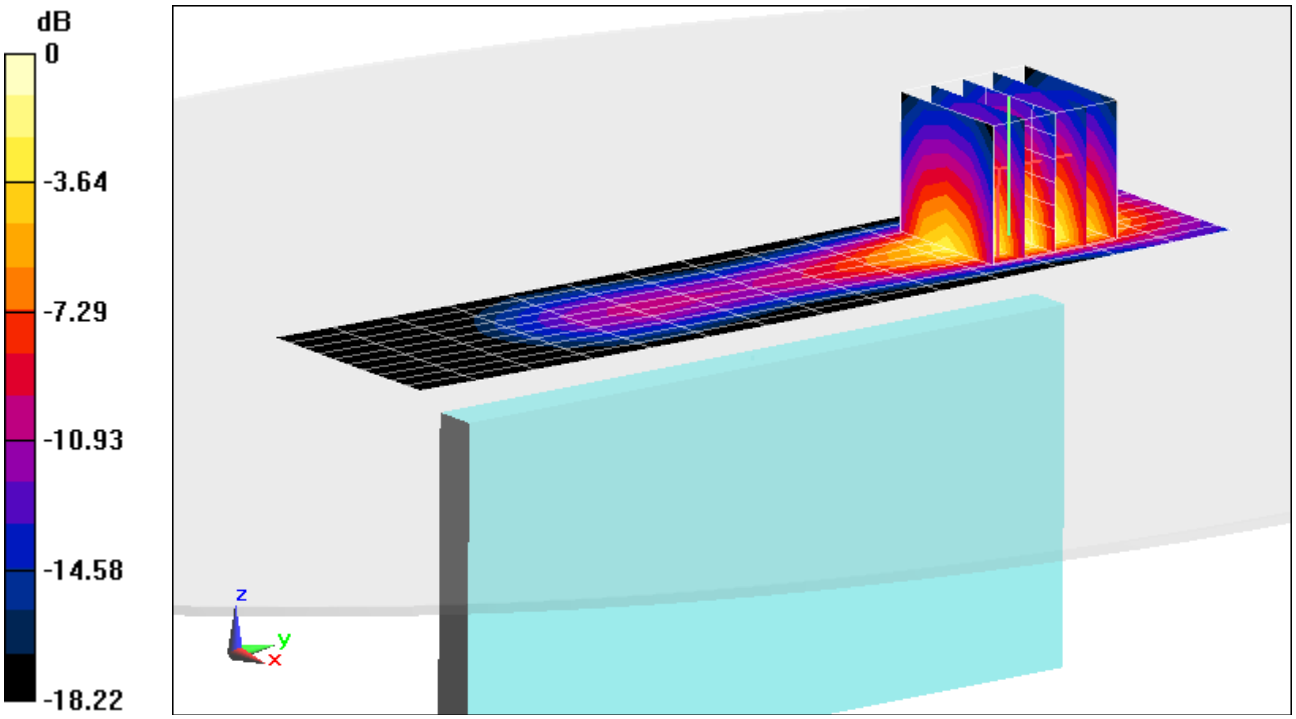

0 dB = 0.551 W/kg = -2.59 dBW/kg

PCTEST ENGINEERING LABORATORY, INC.

DUT: A3LSMN910R4; Type: Portable Handset; Serial: 33EDE

Communication System: UID 0, LTE Band 2 (PCS); Frequency: 1860 MHz;Duty Cycle: 1:1
Medium: 1900 Body Medium parameters used (interpolated):
f = 1860 MHz; σ = 1.502 S/m; ε_r = 52.759; ρ = 1000 kg/m^3
Phantom section: Flat Section; Space: 1.5 cm

Test Date: 09-04-2014; Ambient Temp: 23.1°C; Tissue Temp: 20.8°C

Probe: ES3DV2 - SN3022; ConvF(4.49, 4.49, 4.49); Calibrated: 8/19/2014;
Sensor-Surface: 3mm (Mechanical Surface Detection)
Electronics: DAE4 Sn1322; Calibrated: 8/12/2014
Phantom: ELI v5.0; Type: QDOVA001BB; Serial: 1226
Measurement SW: DASY52, Version 52.8 (8); SEMCAD X Version 14.6.10 (7331)

Mode: LTE Band 2 (PCS), Body SAR, Back side, Low.ch,
20 MHz Bandwidth, QPSK, 1 RB, 99 RB Offset, Standard Cover

Area Scan (9x15x1): Measurement grid: dx=15mm, dy=15mm
Zoom Scan (5x5x7)/Cube 0: Measurement grid: dx=8mm, dy=8mm, dz=5mm
Reference Value = 11.38 V/m; Power Drift = -0.04 dB
Peak SAR (extrapolated) = 0.266 W/kg
SAR(1 g) = 0.168 W/kg

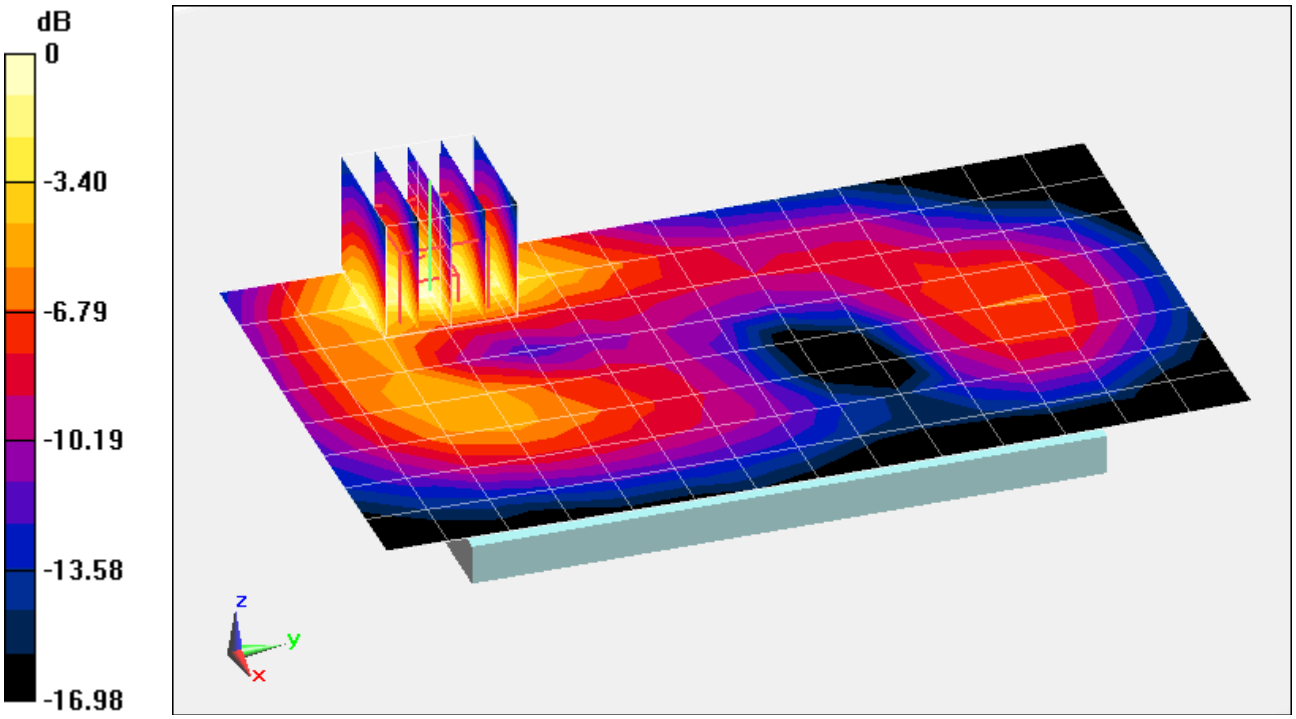

0 dB = 0.202 W/kg = -6.95 dBW/kg

PCTEST ENGINEERING LABORATORY, INC.

DUT: A3LSMN910R4; Type: Portable Handset; Serial: 33EDE

Communication System: UID 0, LTE Band 2 (PCS); Frequency: 1880 MHz;Duty Cycle: 1:1
Medium: 1900 Body Medium parameters used:
f = 1880 MHz; σ = 1.525 S/m; ε_r = 52.667; ρ = 1000 kg/m^3
Phantom section: Flat Section; Space: 1.0 cm

Test Date: 09-04-2014; Ambient Temp: 23.1°C; Tissue Temp: 20.8°C

Probe: ES3DV2 - SN3022; ConvF(4.49, 4.49, 4.49); Calibrated: 8/19/2014;
Sensor-Surface: 3mm (Mechanical Surface Detection)
Electronics: DAE4 Sn1322; Calibrated: 8/12/2014
Phantom: ELI v5.0; Type: QDOVA001BB; Serial: 1226
Measurement SW: DASY52, Version 52.8 (8); SEMCAD X Version 14.6.10 (7331)

Mode: LTE Band 2 (PCS), Body SAR, Right Edge, Mid.ch,
20 MHz Bandwidth, QPSK, 1 RB, 99 RB Offset, Standard Cover

Area Scan (10x13x1): Measurement grid: dx=5mm, dy=15mm
Zoom Scan (5x5x7)/Cube 0: Measurement grid: dx=8mm, dy=8mm, dz=5mm
Reference Value = 28.16 V/m; Power Drift = 0.00 dB
Peak SAR (extrapolated) = 1.79 W/kg
SAR(1 g) = 0.999 W/kg

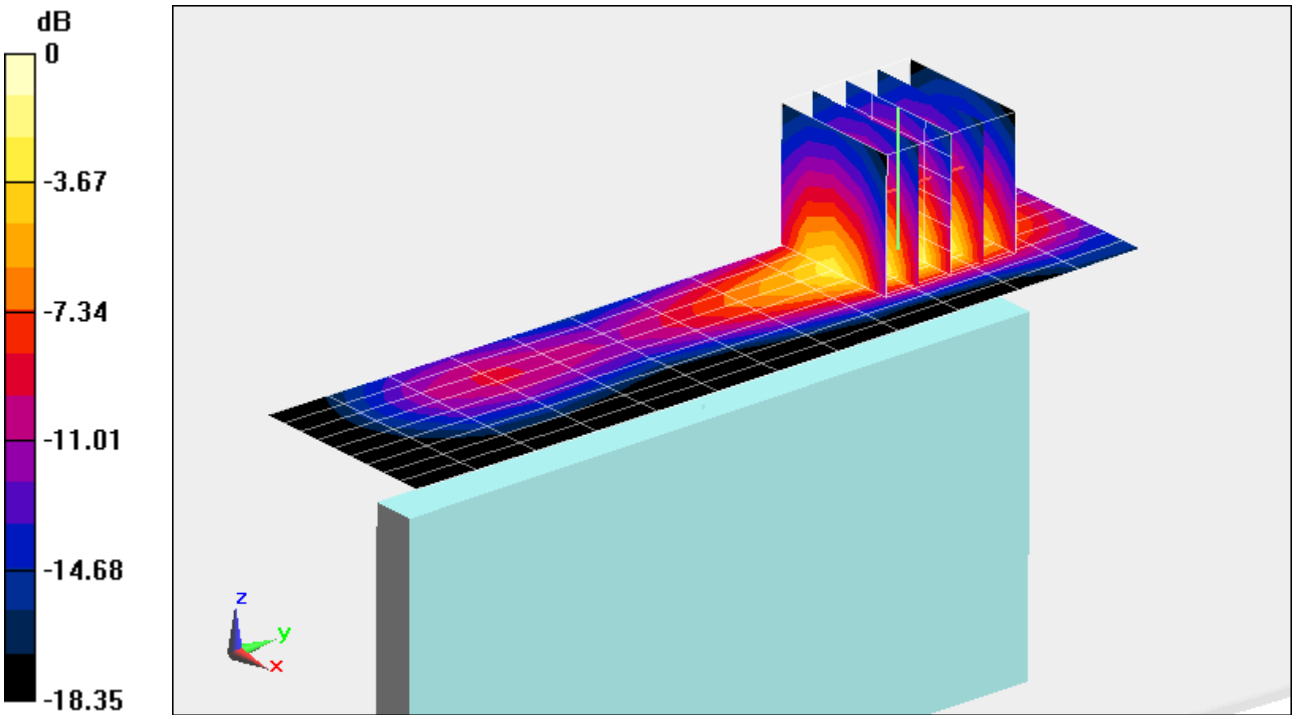

0 dB = 1.28 W/kg = 1.07 dBW/kg

PCTEST ENGINEERING LABORATORY, INC.

DUT: A3LSMN910R4; Type: Portable Handset; Serial: 015D8

Communication System: UID 0, IEEE 802.11b; Frequency: 2462 MHz; Duty Cycle: 1:1
Medium: 2450 Body Medium parameters used (interpolated):
f = 2462 MHz; σ = 1.919 S/m; ε_r = 50.812; ρ = 1000 kg/m^3
Phantom section: Flat Section; Space: 1.0 cm

Test Date: 08-07-2014; Ambient Temp: 23.9°C; Tissue Temp: 23.0°C

Probe: ES3DV3 - SN3319; ConvF(4.24, 4.24, 4.24); Calibrated: 4/17/2014;
Sensor-Surface: 3mm (Mechanical Surface Detection)
Electronics: DAE4 Sn1368; Calibrated: 4/11/2014
Phantom: ELI left; Type: QDOVA002AA; Serial: TP:1202
Measurement SW: DASY52, Version 52.8 (8); SEMCAD X Version 14.6.10 (7331)

Mode: IEEE 802.11b, Body SAR, Ch 11, 1 Mbps, Back Side, Antenna 1, Standard Cover

Area Scan (11x17x1): Measurement grid: dx=12mm, dy=12mm
Zoom Scan (7x7x7)/Cube 0: Measurement grid: dx=5mm, dy=5mm, dz=5mm
Reference Value = 8.728 V/m; Power Drift = 0.06 dB
Peak SAR (extrapolated) = 0.270 W/kg
SAR(1 g) = 0.128 W/kg

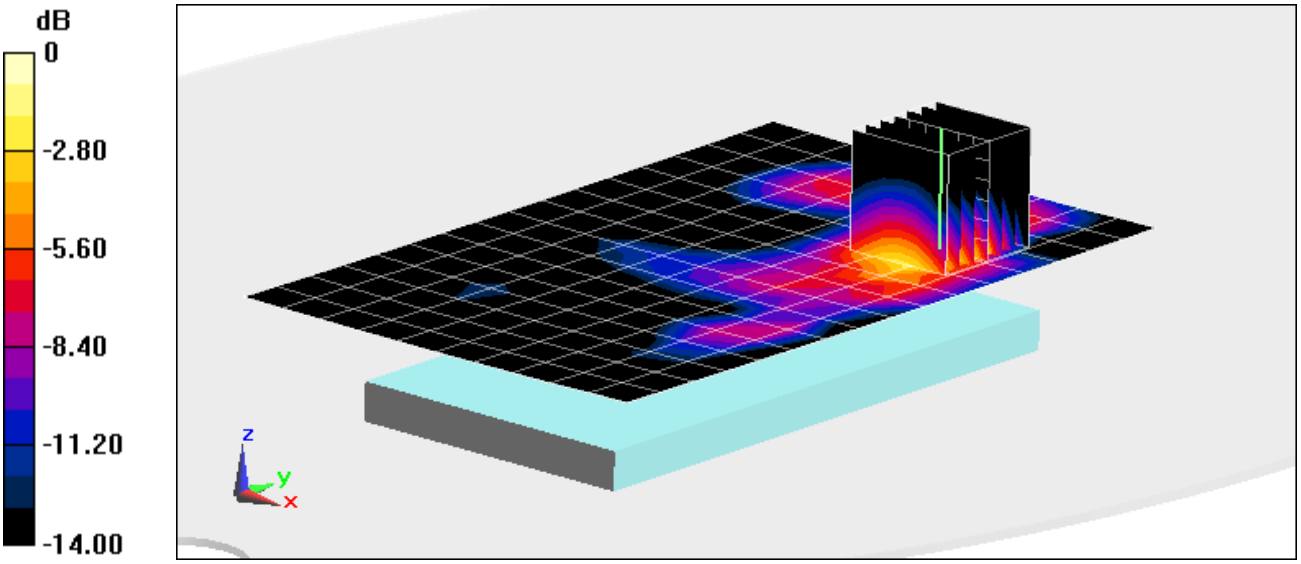

0 dB = 0.161 W/kg = -7.93 dBW/kg

PCTEST ENGINEERING LABORATORY, INC.

DUT: A3LSMN910R4; Type: Portable Handset; Serial: 015D8

Communication System: UID 0, IEEE 802.11n 5.2-5.8 GHz Band; Frequency: 5745 MHz; Duty Cycle: 1:1
Medium: 5 GHz Body Medium parameters used:
f = 5745 MHz; σ = 5.988 S/m; ε_r = 46.411; ρ = 1000 kg/m^3
Phantom section: Flat Section; Space: 1.0 cm

Test Date: 08-11-2014; Ambient Temp: 22.4°C; Tissue Temp: 21.3°C

Probe: EX3DV4 - SN3920; ConvF(4, 4, 4); Calibrated: 12/18/2013;
Sensor-Surface: 1.4mm (Mechanical Surface Detection)
Electronics: DAE4 Sn649; Calibrated: 12/12/2013
Phantom: SAM Sub; Type: SAM 4.0; Serial: TP-1357
Measurement SW: DASY4, Version 4.7 (80); SEMCAD X Version 14.6.10 (7331)

Mode: IEEE 802.11n, 5.8 GHz, Body SAR, Ch 149, 13 Mbps, Back Side, MIMO, Standard Cover

Area Scan (13x21x1): Measurement grid: dx=10mm, dy=10mm
Zoom Scan (8x8x7)/Cube 0: Measurement grid: dx=4mm, dy=4mm, dz=1.4mm; Graded Ratio: 1.4
Reference Value = 5.652 V/m; Power Drift = -0.13 dB
Peak SAR (extrapolated) = 1.44 W/kg
SAR(1 g) = 0.292 W/kg

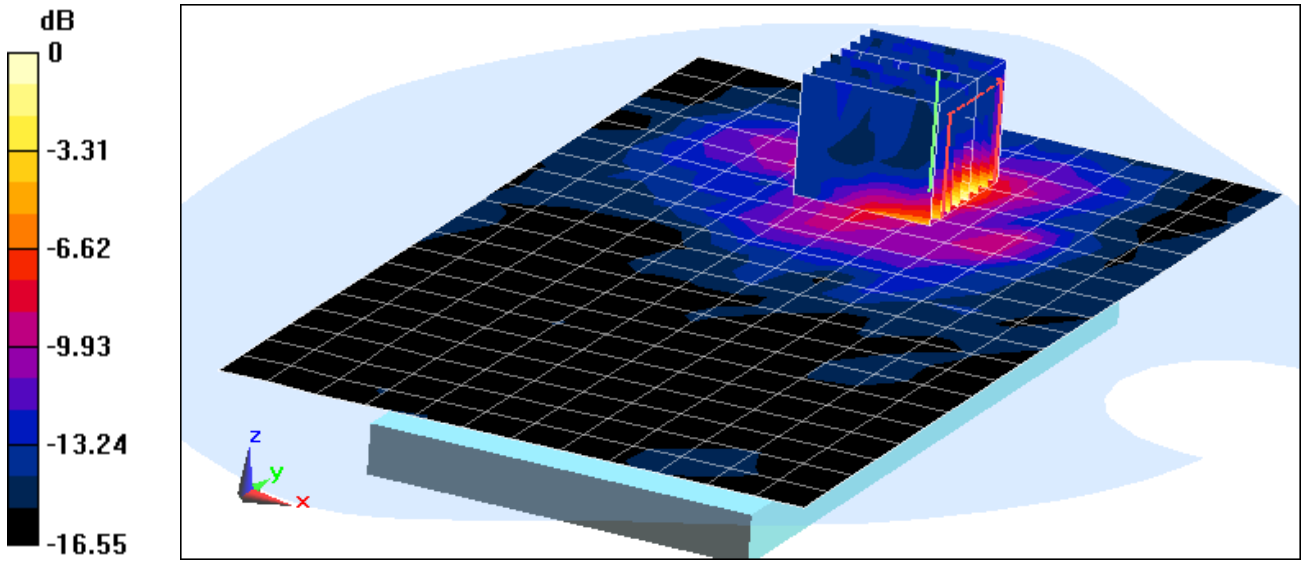

0 dB = 0.652 W/kg = -1.86 dBW/kg

PCTEST ENGINEERING LABORATORY, INC.

DUT: A3LSMN910R4; Type: Portable Handset; Serial: 015D8

Communication System: UID 0, IEEE 802.11n; Frequency: 5745 MHz; Duty Cycle: 1:1
Medium: 5 GHz Body Medium parameters used:
f = 5745 MHz; σ = 6.114 S/m; ε_r = 47.032; ρ = 1000 kg/m^3
Phantom section: Flat Section; Space: 1.0 cm

Test Date: 08-13-2014; Ambient Temp: 24.4°C; Tissue Temp: 24.0°C

Probe: EX3DV4 - SN3589; ConvF(3.97, 3.97, 3.97); Calibrated: 1/29/2014;
Sensor-Surface: 1.4mm (Mechanical Surface Detection)
Electronics: DAE4 Sn1334; Calibrated: 3/17/2014
Phantom: SAM front; Type: QD000P40CD; Serial: TP:1759
Measurement SW: DASY52, Version 52.8 (8); SEMCAD X Version 14.6.10 (7331)

Mode: IEEE 802.11n, 5.8 GHz, Body SAR, Ch 149, 13 Mbps, Back Side, MIMO, Wireless Charging Cover

Area Scan (17x22x1): Measurement grid: dx=10mm, dy=10mm
Zoom Scan (8x7x7)/Cube 0: Measurement grid: dx=4mm, dy=4mm, dz=1.4mm; Graded Ratio: 1.4
Reference Value = 7.354 V/m; Power Drift = 0.14 dB
Peak SAR (extrapolated) = 2.21 W/kg
SAR(1 g) = 0.482 W/kg

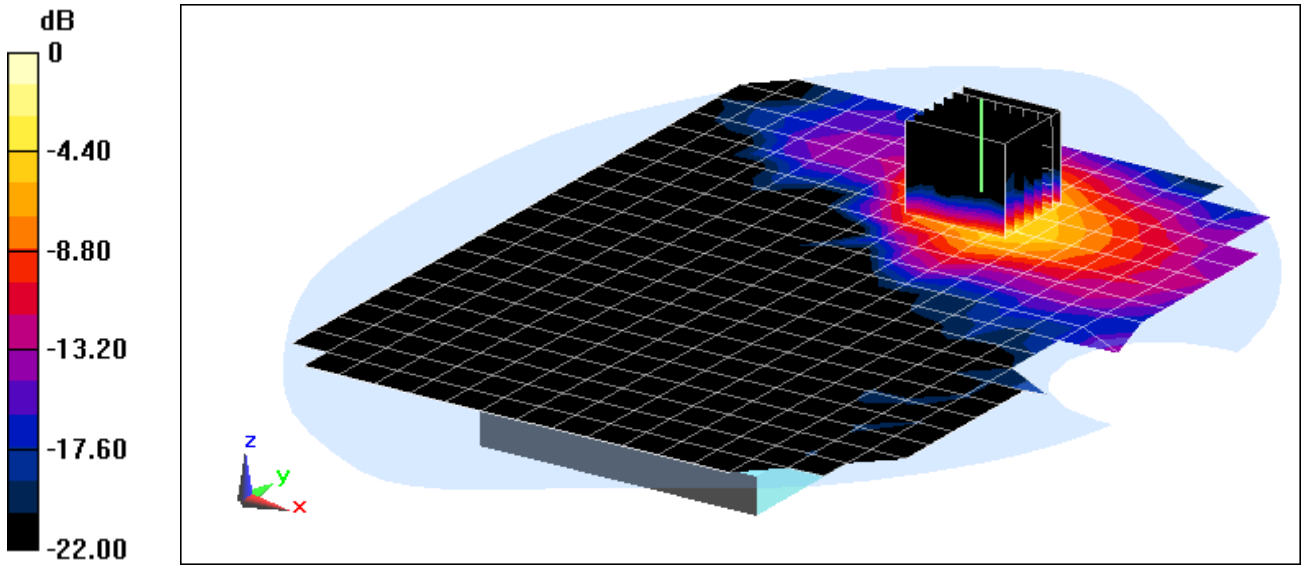

0 dB = 1.17 W/kg = 0.68 dBW/kg

PCTEST ENGINEERING LABORATORY, INC.

DUT: A3LSMN910R4; Type: Portable Handset; Serial: 015D8

Communication System: UID 0, IEEE 802.11n 5.2-5.8 GHz Band; Frequency: 5680 MHz, Duty Cycle: 1:1
Medium: 5 GHz Body Medium parameters used:
f = 5680 MHz; σ = 5.917 S/m; ε_r = 46.318; ρ = 1000 kg/m^3
Phantom section: Flat Section; Space: 1.0 cm

Test Date: 08-11-2014; Ambient Temp: 22.4°C; Tissue Temp: 21.3°C

Probe: EX3DV4 - SN3920; ConvF(3.62, 3.62, 3.62); Calibrated: 12/18/2013,
Sensor-Surface: 1.4mm (Mechanical Surface Detection)
Electronics: DAE4 Sn649; Calibrated: 12/12/2013
Phantom: SAM Sub; Type: SAM 4.0; Serial: TP-1357
Measurement SW: DASY4, Version 4.7 (80); SEMCAD X Version 14.6.10 (7331)

Mode: IEEE 802.11n, 5.5 - 5.7 GHz, Body SAR, Ch 136, 13 Mbps, Back Side, MIMO, Standard Cover

Area Scan (13x21x1): Measurement grid: dx=10mm, dy=10mm
Zoom Scan (8x8x7)/Cube 0: Measurement grid: dx=4mm, dy=4mm, dz=1.4mm; Graded Ratio: 1.4
Reference Value = 7.062 V/m; Power Drift = -0.12 dB
Peak SAR (extrapolated) = 2.06 W/kg
SAR(1 g) = 0.454 W/kg

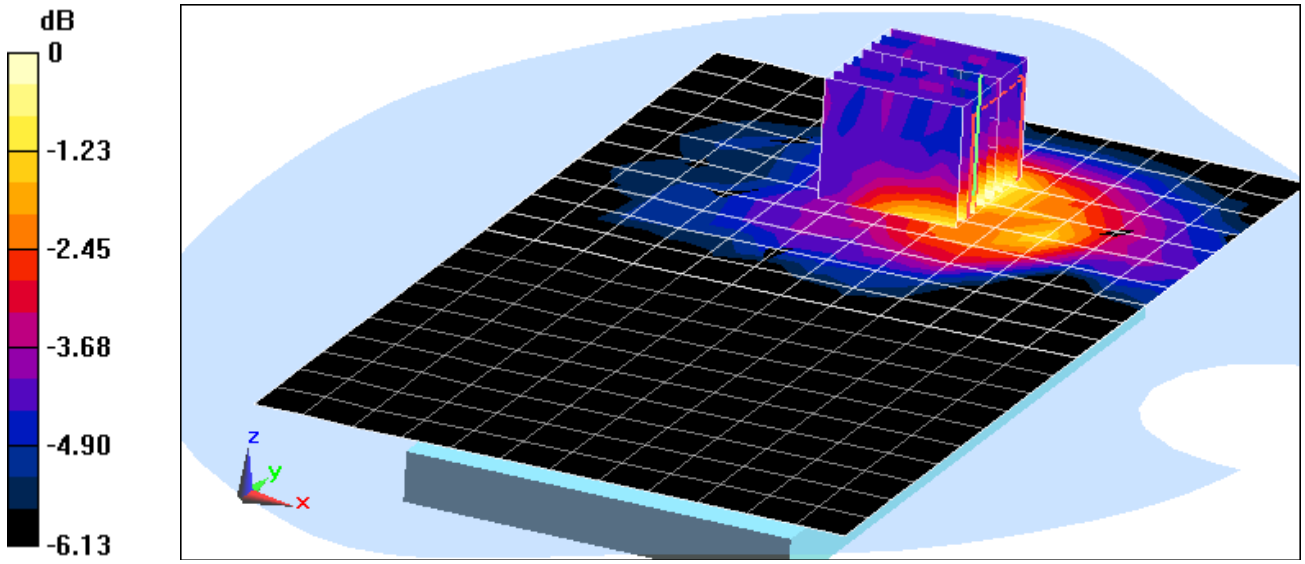

0 dB = 0.718 W/kg = -1.44 dBW/kg

PCTEST ENGINEERING LABORATORY, INC.

DUT: A3LSMN910R4; Type: Portable Handset; Serial: 015D7

Communication System: UID 0, IEEE 802.11a; Frequency: 5700 MHz; Duty Cycle: 1:1
Medium: 5 GHz Body Medium parameters used:
f = 5700 MHz; σ = 6.018 S/m; ε_r = 47.133; ρ = 1000 kg/m^3
Phantom section: Flat Section; Space: 0.0 cm

Test Date: 08-13-2014; Ambient Temp: 24.2°C; Tissue Temp: 23.9°C

Probe: EX3DV4 - SN3589; ConvF(3.81, 3.81, 3.81); Calibrated: 1/29/2014;
Sensor-Surface: 1.4mm (Mechanical Surface Detection)
Electronics: DAE4 Sn1334; Calibrated: 3/17/2014
Phantom: SAM front; Type: QD000P40CD; Serial: TP:1759
Measurement SW: DASY52, Version 52.8 (8); SEMCAD X Version 14.6.10 (7331)

Mode: IEEE 802.11a, 5.5 - 5.7 GHz, Extremity SAR, Ch 140, 6 Mbps, Back Side, Antenna 2, Standard Cover

Area Scan (13x22x1): Measurement grid: dx=10mm, dy=10mm
Zoom Scan (8x8x7)/Cube 0: Measurement grid: dx=4mm, dy=4mm, dz=1.4mm; Graded Ratio: 1.4
Reference Value = 24.200 V/m; Power Drift = 0.15 dB
Peak SAR (extrapolated) = 32.0 W/kg
SAR(10 g) = 0.595 W/kg

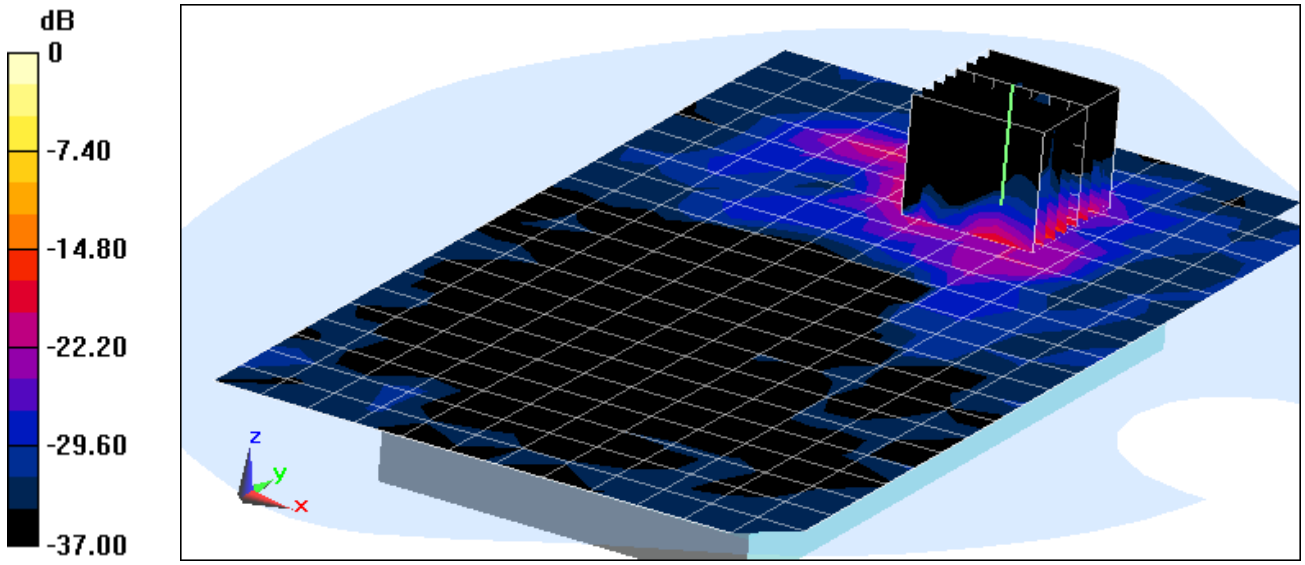

0 dB = 14.5 W/kg = 11.61 dBW/kg

APPENDIX B: SYSTEM VERIFICATION

© 2014 PCTEST Engineering Laboratory, Inc.

PCTEST ENGINEERING LABORATORY, INC.

DUT: SAR Dipole 750 MHz; Type: D750V3; Serial: 1003

Communication System: UID 0, CW; Frequency: 750 MHz;Duty Cycle: 1:1
Medium: 750 Head Medium parameters used (interpolated):
f = 750 MHz; σ = 0.913 S/m; ε_r = 41.009; ρ = 1000 kg/m^3
Phantom section: Flat Section; Space: 1.5 cm

Test Date: 09-01-2014; Ambient Temp: 24.0°C; Tissue Temp: 22.1°C

Probe: ES3DV3 - SN3263; ConvF(6.42, 6.42, 6.42); Calibrated: 5/15/2014;
Sensor-Surface: 3mm (Mechanical Surface Detection)
Electronics: DAE4 Sn859; Calibrated: 5/14/2014
Phantom: SAM v5.0 Left; Type: QD000P40CD; Serial: TP: 1687
Measurement SW: DASY52, Version 52.8 (8); SEMCAD X Version 14.6.10 (7331)

750 MHz System Verification

Area Scan (7x15x1): Measurement grid: dx=15mm, dy=15mm
Zoom Scan (5x5x7)/Cube 0: Measurement grid: dx=8mm, dy=8mm, dz=5mm
Input Power = 20.0 dBm (100 mW)
Peak SAR (extrapolated) = 1.26 W/kg
SAR(1 g) = 0.831 W/kg
Deviation(1 g): -0.72%

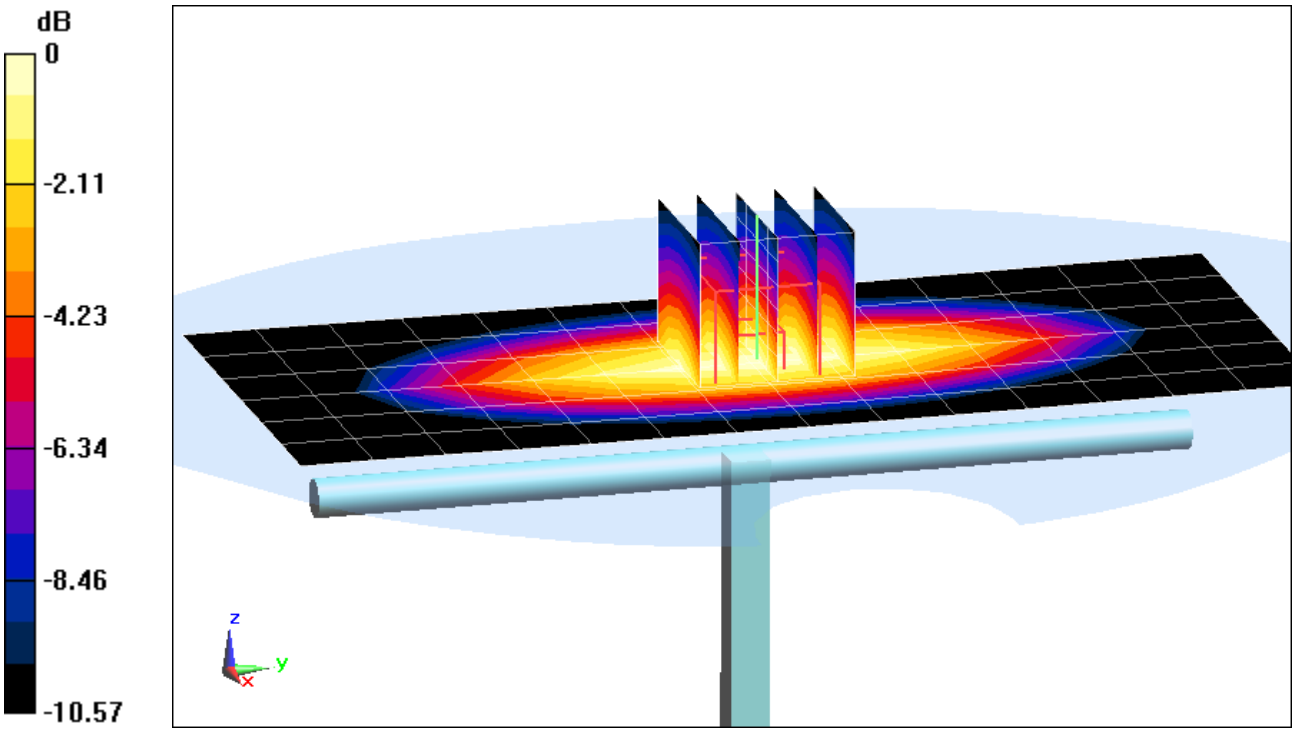

0 dB = 0.973 W/kg = -0.12 dBW/kg

PCTEST ENGINEERING LABORATORY, INC.

DUT: SAR Dipole 835 MHz; Type: D835V2; Serial: 4d119

Communication System: UID 0, CW; Frequency: 835 MHz;Duty Cycle: 1:1
Medium: 835 Head Medium parameters used:
f = 835 MHz; σ = 0.934 S/m; ε_r = 42.466; ρ = 1000 kg/m^3
Phantom section: Flat Section; Space: 1.5 cm

Test Date: 09-08-2014; Ambient Temp: 24.8°C; Tissue Temp: 22.8°C

Probe: ES3DV3 - SN3319; ConvF(6.27, 6.27, 6.27); Calibrated: 4/17/2014;
Sensor-Surface: 3mm (Mechanical Surface Detection)
Electronics: DAE4 Sn1368; Calibrated: 4/11/2014
Phantom: SAM; Type: QD000P40CD; Serial: TP:1758
Measurement SW: DASY52, Version 52.8 (8); SEMCAD X Version 14.6.10 (7331)

835 MHz System Verification

Area Scan (7x14x1): Measurement grid: dx=15mm, dy=15mm
Zoom Scan (5x5x7)/Cube 0: Measurement grid: dx=8mm, dy=8mm, dz=5mm
Input Power = 20.0 dBm (100 mW)
Peak SAR (extrapolated) = 1.39 W/kg
SAR(1 g) = 0.941 W/kg
Deviation(1 g): 2.06%

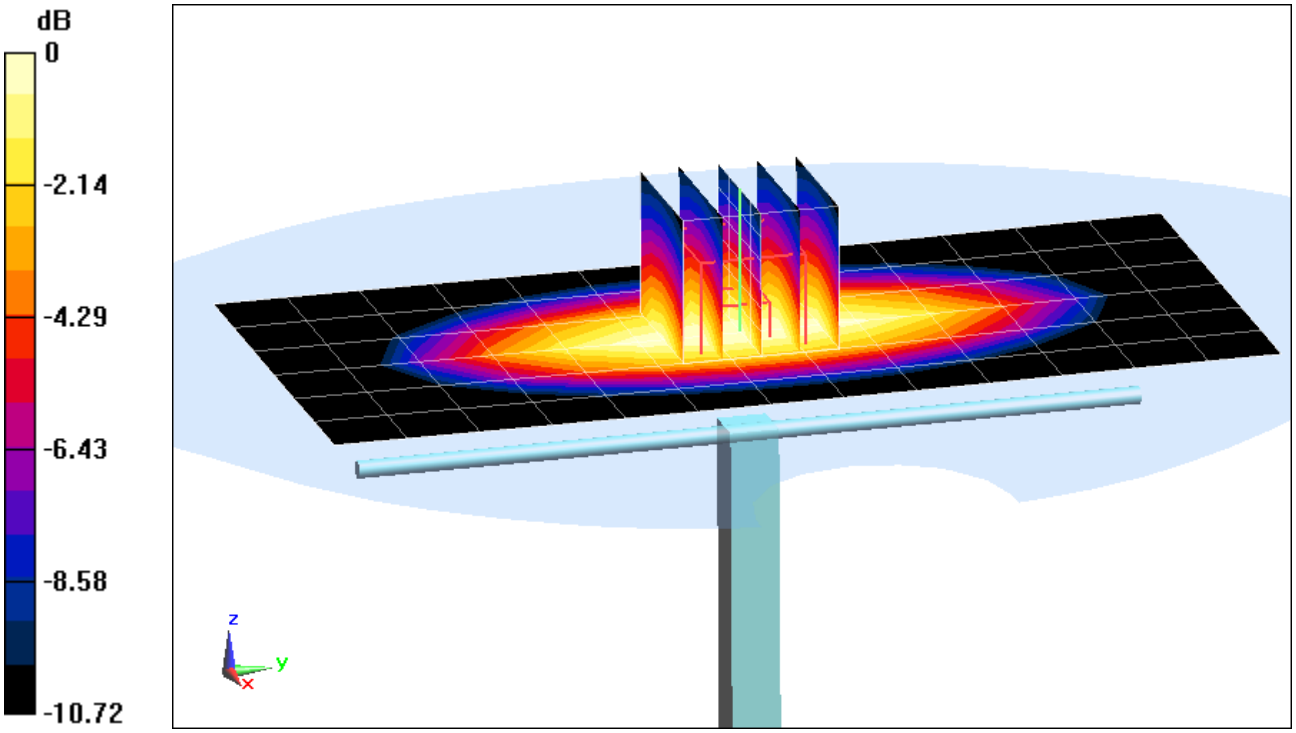

0 dB = 1.10 W/kg = 0.41 dBW/kg

PCTEST ENGINEERING LABORATORY, INC.

DUT: SAR Dipole 1750 MHz; Type: D1765V2; Serial: 1008

Communication System: UID 0, CW; Frequency: 1750 MHz;Duty Cycle: 1:1
Medium: 1750 Head Medium parameters used:
f = 1750 MHz; σ = 1.344 S/m; ε_r = 40.243; ρ = 1000 kg/m^3
Phantom section: Flat Section; Space: 1.0 cm

Test Date: 09-02-2014; Ambient Temp: 23.4°C; Tissue Temp: 22.7°C

Probe: ES3DV3 - SN3258; ConvF(5.19, 5.19, 5.19); Calibrated: 2/25/2014;
Sensor-Surface: 3mm (Mechanical Surface Detection)
Electronics: DAE4 Sn665; Calibrated: 2/26/2014
Phantom: SAM Front; Type: SAM; Serial: 1686
Measurement SW: DASY52, Version 52.8 (8); SEMCAD X Version 14.6.10 (7331)

1750 MHz System Verification

Area Scan (7x9x1): Measurement grid: dx=15mm, dy=15mm
Zoom Scan (5x5x7)/Cube 0: Measurement grid: dx=8mm, dy=8mm, dz=5mm
Input Power = 20.0 dBm (100 mW)
Peak SAR (extrapolated) = 6.21 W/kg
SAR(1 g) = 3.4 W/kg
Deviation(1 g): -7.86%

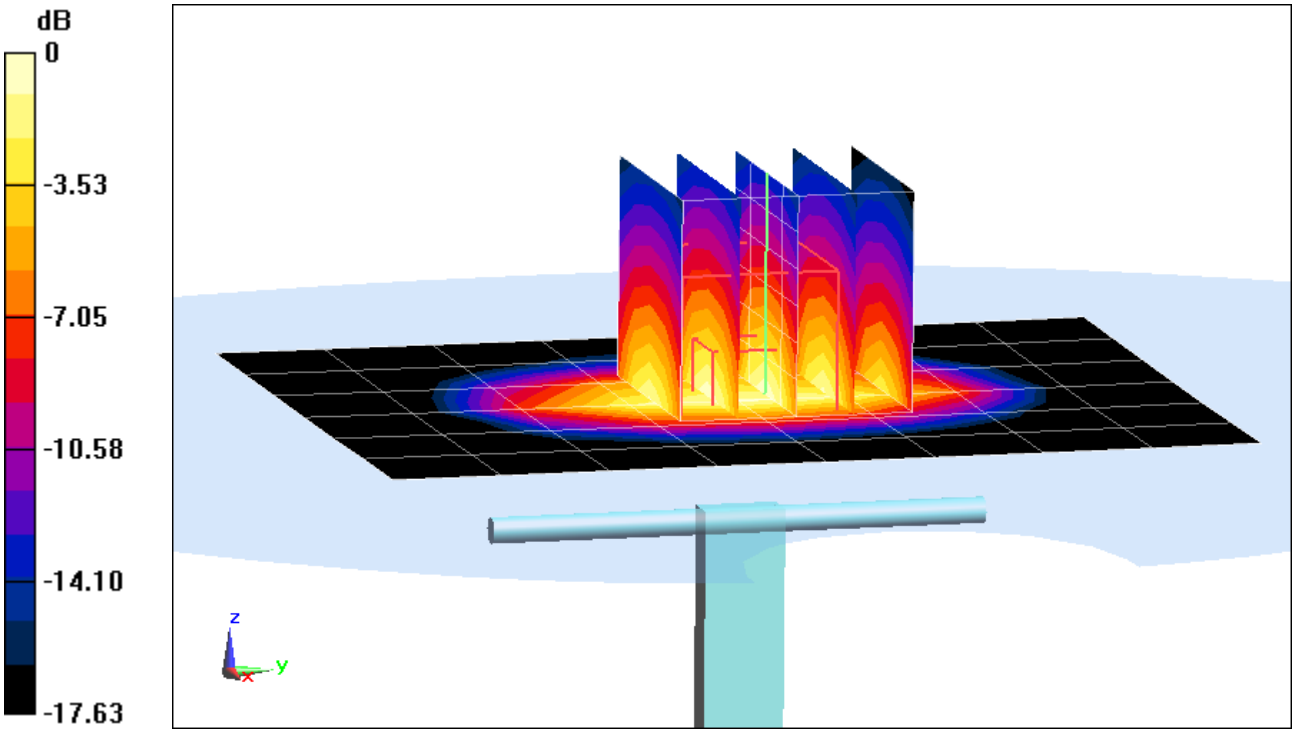

0 dB = 4.25 W/kg = 6.28 dBW/kg

PCTEST ENGINEERING LABORATORY, INC.

DUT: SAR Dipole 1900 MHz; Type: D1900V2; Serial: 5d141

Communication System: UID 10000, CW; Frequency: 1900 MHz;Duty Cycle: 1:1
Medium: 1900 Head Medium parameters used (interpolated):
f = 1900 MHz; σ = 1.457 S/m; ε_r = 39.719; ρ = 1000 kg/m^3
Phantom section: Flat Section; Space: 1.0 cm

Test Date: 09-08-2014; Ambient Temp: 23.6°C; Tissue Temp: 22.4°C

Probe: ES3DV2 - SN3022; ConvF(4.85, 4.85, 4.85); Calibrated: 8/19/2014;
Sensor-Surface: 3mm (Mechanical Surface Detection)
Electronics: DAE4 Sn1322; Calibrated: 8/12/2014
Phantom: SAM with CRP v4.0; Type: QD000P40CD; Serial: TP:1800
Measurement SW: DASY52, Version 52.8 (8); SEMCAD X Version 14.6.10 (7331)

1900 MHz System Verification

Area Scan (7x9x1): Measurement grid: dx=15mm, dy=15mm
Zoom Scan (5x5x7)/Cube 0: Measurement grid: dx=8mm, dy=8mm, dz=5mm
Input Power = 20.0 dBm (100 mW)
Peak SAR (extrapolated) = 7.56 W/kg
SAR(1 g) = 4.23 W/kg
Deviation(1 g): 5.49%

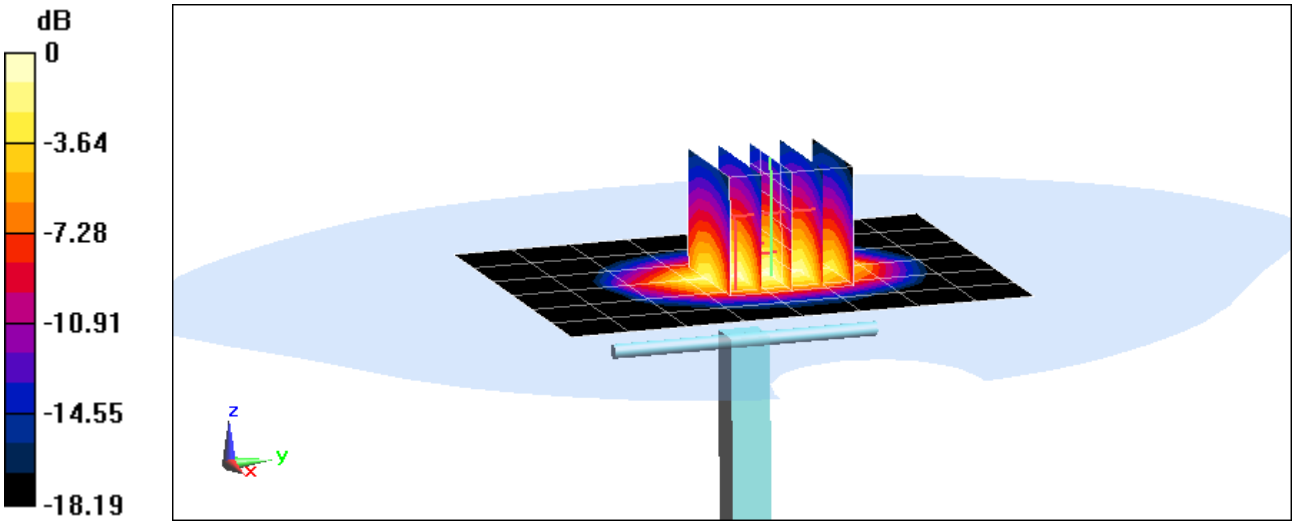

0 dB = 5.31 W/kg = 7.25 dBW/kg

PCTEST ENGINEERING LABORATORY, INC.

DUT: SAR Dipole 2450 MHz; Type: D2450V2; Serial: 797

Communication System: UID 0, CW; Frequency: 2450 MHz; Duty Cycle: 1:1
Medium: 2450 Head Medium parameters used:
f = 2450 MHz; σ = 1.861 S/m; ε_r = 38.157; ρ = 1000 kg/m^3
Phantom section: Flat Section; Space: 1.0 cm

Test Date: 08-28-2014; Ambient Temp: 24.1°C; Tissue Temp: 22.2°C

Probe: ES3DV3 - SN3258; ConvF(4.52, 4.52, 4.52); Calibrated: 2/25/2014;
Sensor-Surface: 3mm (Mechanical Surface Detection)
Electronics: DAE4 Sn665; Calibrated: 2/26/2014
Phantom: SAM Front; Type: SAM; Serial: 1686
Measurement SW: DASY52, Version 52.8 (8); SEMCAD X Version 14.6.10 (7331)

2450 MHz System Verification

Area Scan (8x9x1): Measurement grid: dx=12mm, dy=12mm
Zoom Scan (7x7x7)/Cube 0: Measurement grid: dx=5mm, dy=5mm, dz=5mm
Input Power = 20.0 dBm (100 mW)
Peak SAR (extrapolated) = 10.3 W/kg
SAR(1 g) = 4.82 W/kg
Deviation(1 g): -6.95%

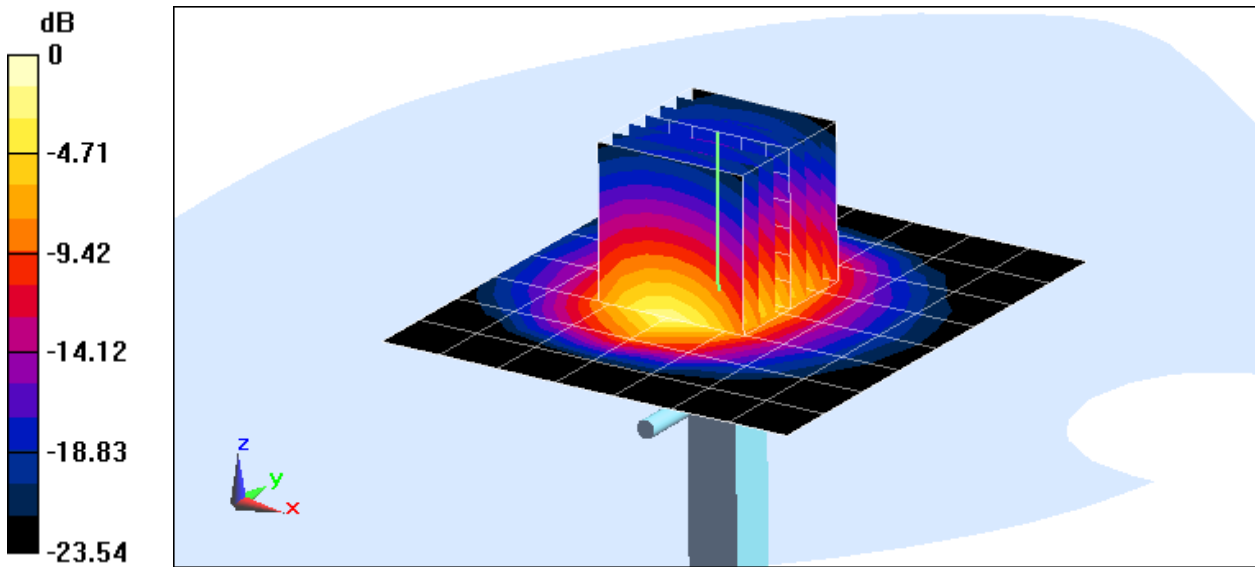

0 dB = 6.36 W/kg = 8.03 dBW/kg

PCTEST ENGINEERING LABORATORY, INC.

DUT: SAR Dipole 5200 MHz; Type: D5GHzV2; Serial: 1057

Communication System: UID 0, CW; Frequency: 5200 MHz; Duty Cycle: 1:1
Medium: 5 GHz Head Medium parameters used:
f = 5200 MHz; σ = 4.724 S/m; ε_r = 35.49; ρ = 1000 kg/m^3
Phantom section: Flat Section; Space: 1.0 cm

Test Date: 08-12-2014; Ambient Temp: 24.2°C; Tissue Temp: 22.8°C

Probe: EX3DV4 - SN3914; ConvF(4.99, 4.99, 4.99); Calibrated: 10/23/2013;
Sensor-Surface: 1.4mm (Mechanical Surface Detection)
Electronics: DAE4 Sn1333; Calibrated: 11/19/2013
Phantom: SAM V5.0 Right; Type: QD000P40CD; Serial: 1647
Measurement SW: DASY52, Version 52.8 (8);SEMCAD X Version 14.6.10 (7331)

5200 MHz System Verification

Area Scan (7x7x1): Measurement grid: dx=10mm, dy=10mm
Zoom Scan (8x8x7)/Cube 0: Measurement grid: dx=4mm, dy=4mm, dz=1.4mm; Graded Ratio: 1.4
Input Power = 20.0 dBm (100 mW)
Peak SAR (extrapolated) = 31.6 W/kg
SAR(1 g) = 7.57 W/kg
Deviation(1 g): -2.95%

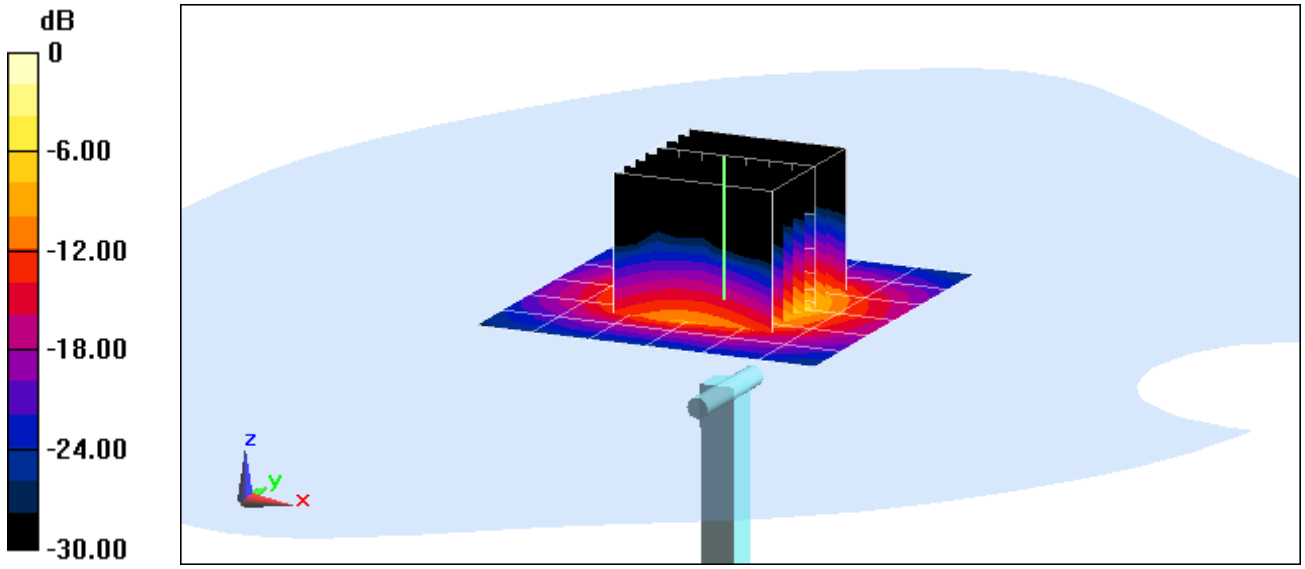

0 dB = 17.6 W/kg = 12.46 dBW/kg

PCTEST ENGINEERING LABORATORY, INC.

DUT: SAR Dipole 5300 MHz; Type: D5GHzV2; Serial: 1057

Communication System: UID 0, CW; Frequency: 5300 MHz;Duty Cycle: 1:1
Medium: 5 GHz Head Medium parameters used:
f = 5300 MHz; σ = 4.826 S/m; ε_r = 35.388; ρ = 1000 kg/m^3
Phantom section: Flat Section; Space: 1.0 cm

Test Date: 08-12-2014; Ambient Temp: 24.2°C; Tissue Temp: 22.9°C

Probe: EX3DV4 - SN3914; ConvF(4.82, 4.82, 4.82); Calibrated: 10/23/2013;
Sensor-Surface: 1.4mm (Mechanical Surface Detection)
Electronics: DAE4 Sn1333; Calibrated: 11/19/2013
Phantom: SAM V5.0 Right; Type: QD000P40CD; Serial: 1647
Measurement SW: DASY52, Version 52.8 (8);SEMCAD X Version 14.6.10 (7331)

5300 MHz System Verification

Area Scan (7x8x1): Measurement grid: dx=10mm, dy=10mm
Zoom Scan (8x8x7)/Cube 0: Measurement grid: dx=4mm, dy=4mm, dz=1.4mm; Graded Ratio: 1.4
Input Power = 20.0 dBm (100 mW)
Peak SAR (extrapolated) = 35.5 W/kg
SAR(1 g) = 8.18 W/kg
Deviation(1 g): -1.45%

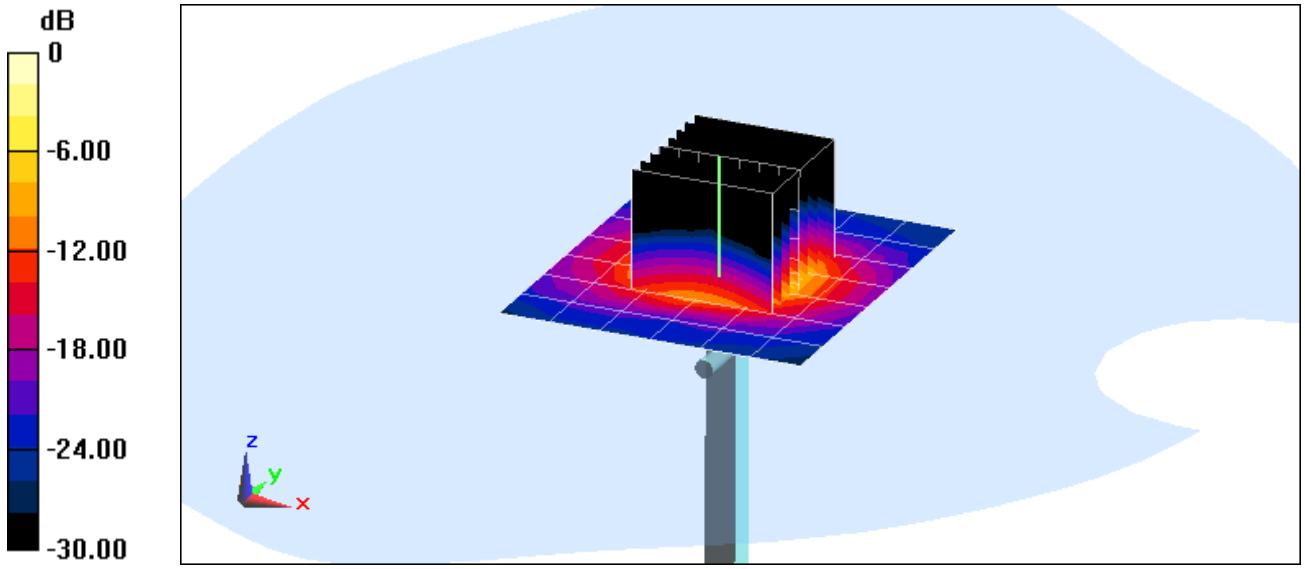

0 dB = 19.1 W/kg = 12.81 dBW/kg

PCTEST ENGINEERING LABORATORY, INC.

DUT: SAR Dipole 5500 MHz; Type: D5GHzV2; Serial: 1057

Communication System: UID 0, CW; Frequency: 5500 MHz;Duty Cycle: 1:1
Medium: 5 GHz Head Medium parameters used:
f = 5500 MHz; σ = 5.059 S/m; ε_r = 35.124; ρ = 1000 kg/m^3
Phantom section: Flat Section; Space: 1.0 cm

Test Date: 08-12-2014; Ambient Temp: 24.3°C; Tissue Temp: 22.9°C

Probe: EX3DV4 - SN3914; ConvF(4.55, 4.55, 4.55); Calibrated: 10/23/2013;
Sensor-Surface: 1.4mm (Mechanical Surface Detection)
Electronics: DAE4 Sn1333; Calibrated: 11/19/2013
Phantom: SAM V5.0 Right; Type: QD000P40CD; Serial: 1647
Measurement SW: DASY52, Version 52.8 (8); SEMCAD X Version 14.6.10 (7331)

5500 MHz System Verification

Area Scan (7x7x1): Measurement grid: dx=10mm, dy=10mm
Zoom Scan (8x8x7)/Cube 0: Measurement grid: dx=4mm, dy=4mm, dz=1.4mm; Graded Ratio: 1.4
Input Power = 20.0 dBm (100 mW)
Peak SAR (extrapolated) = 34.8 W/kg
SAR(1 g) = 7.92 W/kg
Deviation(1 g): -6.05%

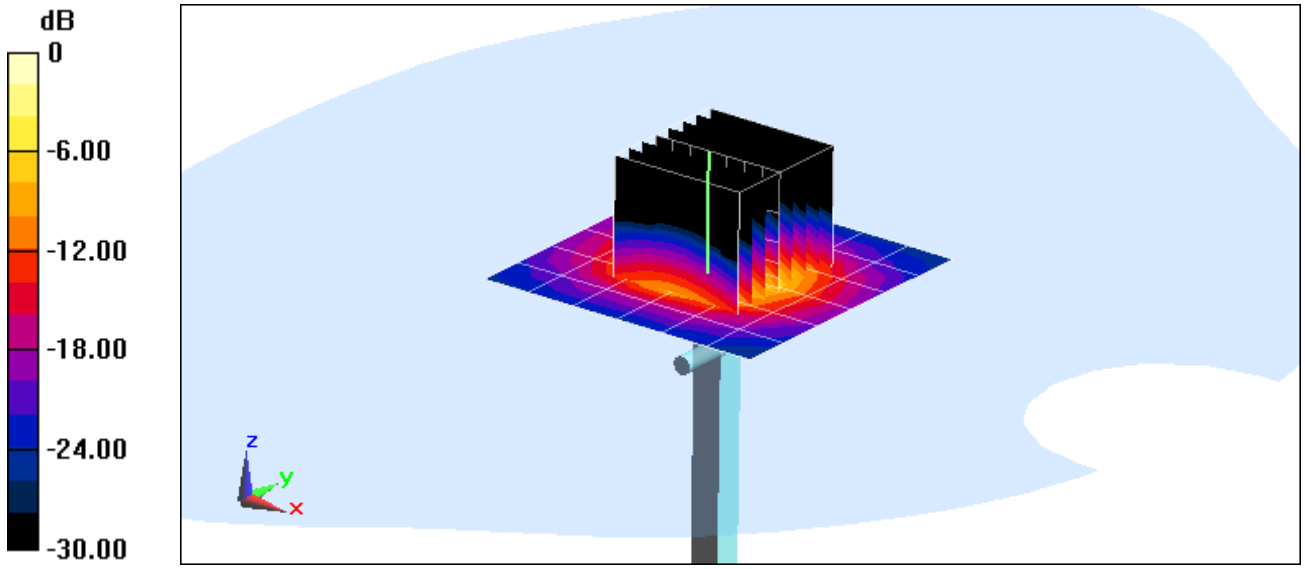

0 dB = 18.9 W/kg = 12.76 dBW/kg

PCTEST ENGINEERING LABORATORY, INC.

DUT: SAR Dipole 5600 MHz; Type: D5GHzV2; Serial: 1057

Communication System: UID 0 - n/a, CW; Frequency: 5600 MHz; Duty Cycle: 1:1
Medium: 5 GHz Head Medium parameters used:
f = 5600 MHz; σ = 5.129 S/m; ε_r = 34.965; ρ = 1000 kg/m^3
Phantom section: Flat Section; Space: 1.0 cm

Test Date: 08-12-2014; Ambient Temp: 24.2°C; Tissue Temp: 22.9°C

Probe: EX3DV4 - SN3914; ConvF(4.37, 4.37, 4.37); Calibrated: 10/23/2013;
Sensor-Surface: 1.4mm (Mechanical Surface Detection)
Electronics: DAE4 Sn1333; Calibrated: 11/19/2013
Phantom: SAM V5.0 Right; Type: QD000P40CD; Serial: 1647
Measurement SW: DASY52, Version 52.8 (8); SEMCAD X Version 14.6.10 (7331)

5600 MHz System Verification

Area Scan (7x7x1): Measurement grid: dx=10mm, dy=10mm
Zoom Scan (8x8x7)/Cube 0: Measurement grid: dx=4mm, dy=4mm, dz=1.4mm; Graded Ratio: 1.4
Input Power = 20.0 dBm (100 mW)
Peak SAR (extrapolated) = 38.1 W/kg
SAR(1 g) = 8.5 W/kg
Deviation(1 g): 1.80%

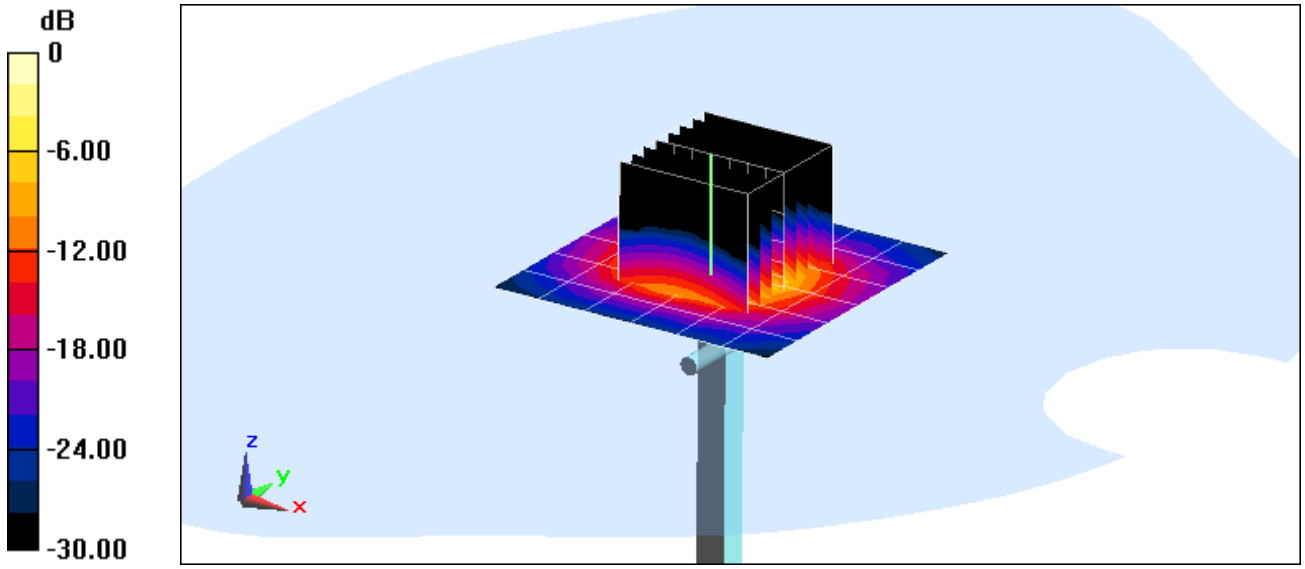

0 dB = 20.6 W/kg = 13.14 dBW/kg

PCTEST ENGINEERING LABORATORY, INC.

DUT: SAR Dipole 5800 MHz; Type: D5GHzV2; Serial: 1057

Communication System: UID 0, CW; Frequency: 5800 MHz; Duty Cycle: 1:1
Medium: 5 GHz Head Medium parameters used:
f = 5800 MHz; σ = 5.343 S/m; ε_r = 34.693; ρ = 1000 kg/m^3
Phantom section: Flat Section; Space: 1.0 cm

Test Date: 08-12-2014; Ambient Temp: 24.2°C; Tissue Temp: 22.9°C

Probe: EX3DV4 - SN3914; ConvF(4.52, 4.52, 4.52); Calibrated: 10/23/2013;
Sensor-Surface: 1.4mm (Mechanical Surface Detection)
Electronics: DAE4 Sn1333; Calibrated: 11/19/2013
Phantom: SAM V5.0 Right; Type: QD000P40CD; Serial: 1647
Measurement SW: DASY52, Version 52.8 (8); SEMCAD X Version 14.6.10 (7331)

5800 MHz System Verification

Area Scan (7x7x1): Measurement grid: dx=10mm, dy=10mm
Zoom Scan (8x8x7)/Cube 0: Measurement grid: dx=4mm, dy=4mm, dz=1.4mm; Graded Ratio: 1.4
Input Power = 20.0 dBm (100 mW)
Peak SAR (extrapolated) = 36.2 W/kg
SAR(1 g) = 7.7 W/kg
Deviation(1 g): -2.90%

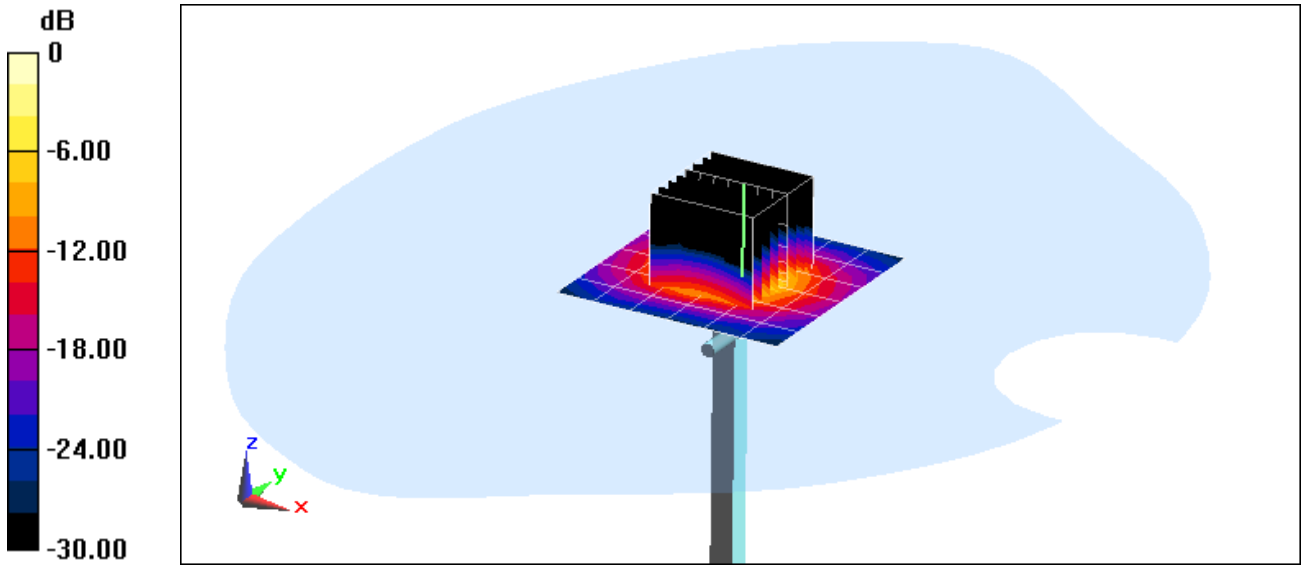

0 dB = 19.0 W/kg = 12.79 dBW/kg

PCTEST ENGINEERING LABORATORY, INC.

DUT: SAR Dipole 750 MHz; Type: D750V3; Serial: 1003

Communication System: UID 0, CW; Frequency: 750 MHz;Duty Cycle: 1:1
Medium: 750 Body Medium parameters used (interpolated):
f = 750 MHz; σ = 0.973 S/m; ε_r = 54.401; ρ = 1000 kg/m^3
Phantom section: Flat Section; Space: 1.5 cm

Test Date: 09-09-2014; Ambient Temp: 24.5°C; Tissue Temp: 24.0°C

Probe: ES3DV3 - SN3209; ConvF(6.16, 6.16, 6.16); Calibrated: 3/19/2014;
Sensor-Surface: 3mm (Mechanical Surface Detection)
Electronics: DAE4 Sn1334; Calibrated: 3/17/2014
Phantom: SAM front; Type: QD000P40CD; Serial: TP:1759
Measurement SW: DASY52, Version 52.8 (8); SEMCAD X Version 14.6.10 (7331)

750 MHz System Verification

Area Scan (7x15x1): Measurement grid: dx=15mm, dy=15mm
Zoom Scan (5x5x7)/Cube 0: Measurement grid: dx=8mm, dy=8mm, dz=5mm
Input Power: 20.0 dBm (100 mW)
Peak SAR (extrapolated) = 1.33 W/kg
SAR(1 g) = 0.917 W/kg
Deviation(1 g): 4.56%

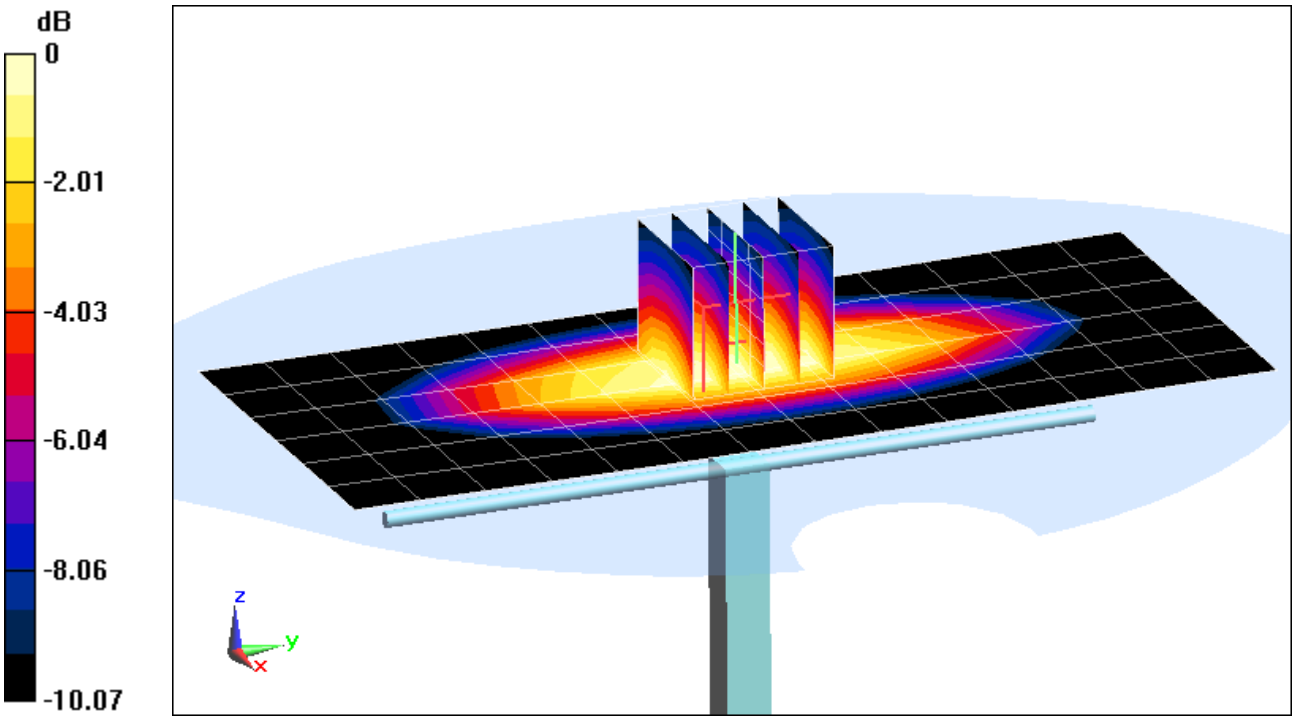

0 dB = 1.07 W/kg = 0.29 dBW/kg

PCTEST ENGINEERING LABORATORY, INC.

DUT: SAR Dipole 835 MHz; Type: D835V2; Serial: 4d119

Communication System: UID 0, CW; Frequency: 835 MHz;Duty Cycle: 1:1
Medium: 835 Body Medium parameters used:
f = 835 MHz; σ = 1.005 S/m; ε_r = 53.279; ρ = 1000 kg/m^3
Phantom section: Flat Section; Space: 1.5 cm

Test Date: 09-03-2014; Ambient Temp: 24.0°C; Tissue Temp: 22.1°C

Probe: ES3DV3 - SN3263; ConvF(6.16, 6.16, 6.16); Calibrated: 5/15/2014;
Sensor-Surface: 3mm (Mechanical Surface Detection)
Electronics: DAE4 Sn859; Calibrated: 5/14/2014
Phantom: SAM v5.0 front; Type: QD000P40CD; Serial: TP-1646
Measurement SW: DASY52, Version 52.8 (8); SEMCAD X Version 14.6.10 (7331)

835 MHz System Verification

Area Scan (7x14x1): Measurement grid: dx=15mm, dy=15mm
Zoom Scan (5x5x7)/Cube 0: Measurement grid: dx=8mm, dy=8mm, dz=5mm
Input Power: 20.0 dBm (100 mW)
Peak SAR (extrapolated) = 1.45 W/kg
SAR(1 g) = 0.979 W/kg
Deviation(1 g): 4.82%

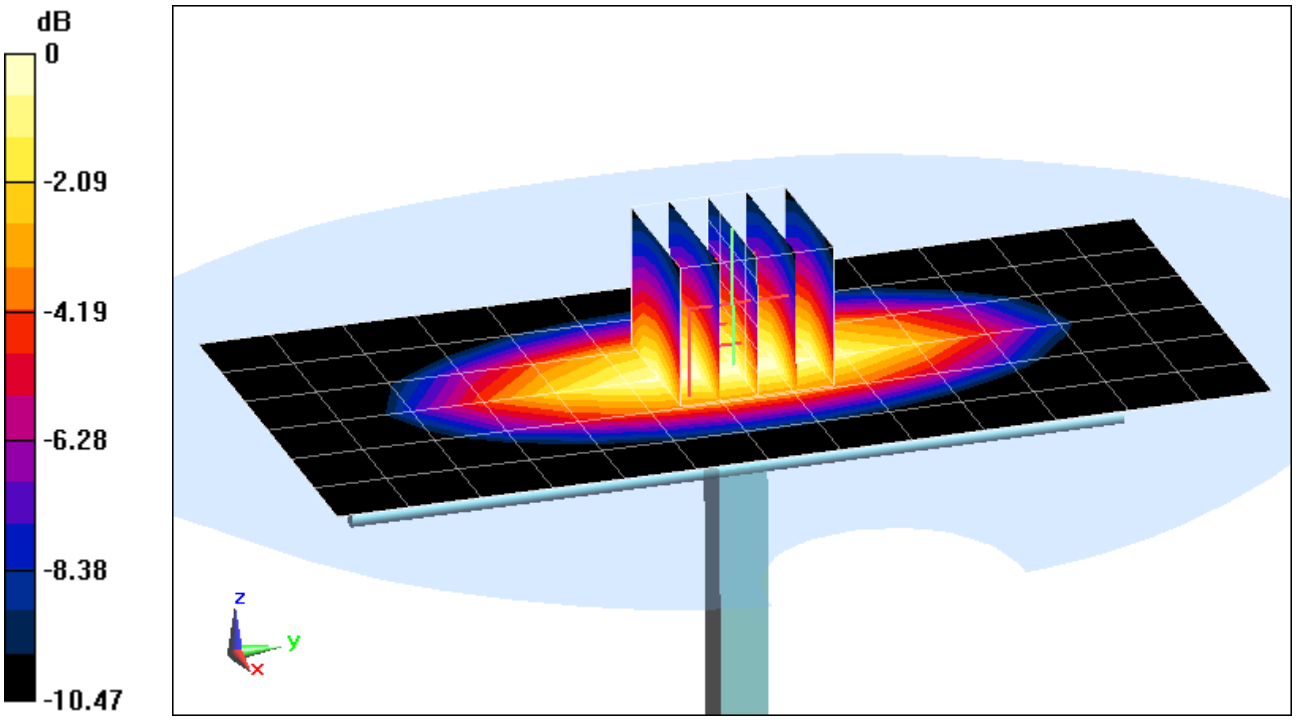

0 dB = 1.15 W/kg = 0.61 dBW/kg

PCTEST ENGINEERING LABORATORY, INC.

DUT: SAR Dipole 1750 MHz; Type: D1765V2; Serial: 1008

Communication System: UID 0, CW; Frequency: 1750 MHz;Duty Cycle: 1:1
Medium: 1750 Body Medium parameters used:
f = 1750 MHz; σ = 1.43 S/m; ε_r = 52.109; ρ = 1000 kg/m^3
Phantom section: Flat Section; Space: 1.0 cm

Test Date: 09-05-2014; Ambient Temp: 23.8°C; Tissue Temp: 21.7°C

Probe: ES3DV3 - SN3287; ConvF(4.93, 4.93, 4.93); Calibrated: 11/20/2013;
Sensor-Surface: 3mm (Mechanical Surface Detection)
Electronics: DAE4 Sn1408; Calibrated: 11/19/2013
Phantom: ELI v5.0; Type: QDOVA001BB; Serial: 1229
Measurement SW: DASY52, Version 52.8 (8); SEMCAD X Version 14.6.10 (7331)

1750 MHz System Verification

Area Scan (7x9x1): Measurement grid: dx=15mm, dy=15mm
Zoom Scan (5x5x7)/Cube 0: Measurement grid: dx=8mm, dy=8mm, dz=5mm
Input Power: 20.0 dBm (100 mW)
Peak SAR (extrapolated) = 6.58 W/kg
SAR(1 g) = 3.78 W/kg
Deviation(1 g): 0.53%

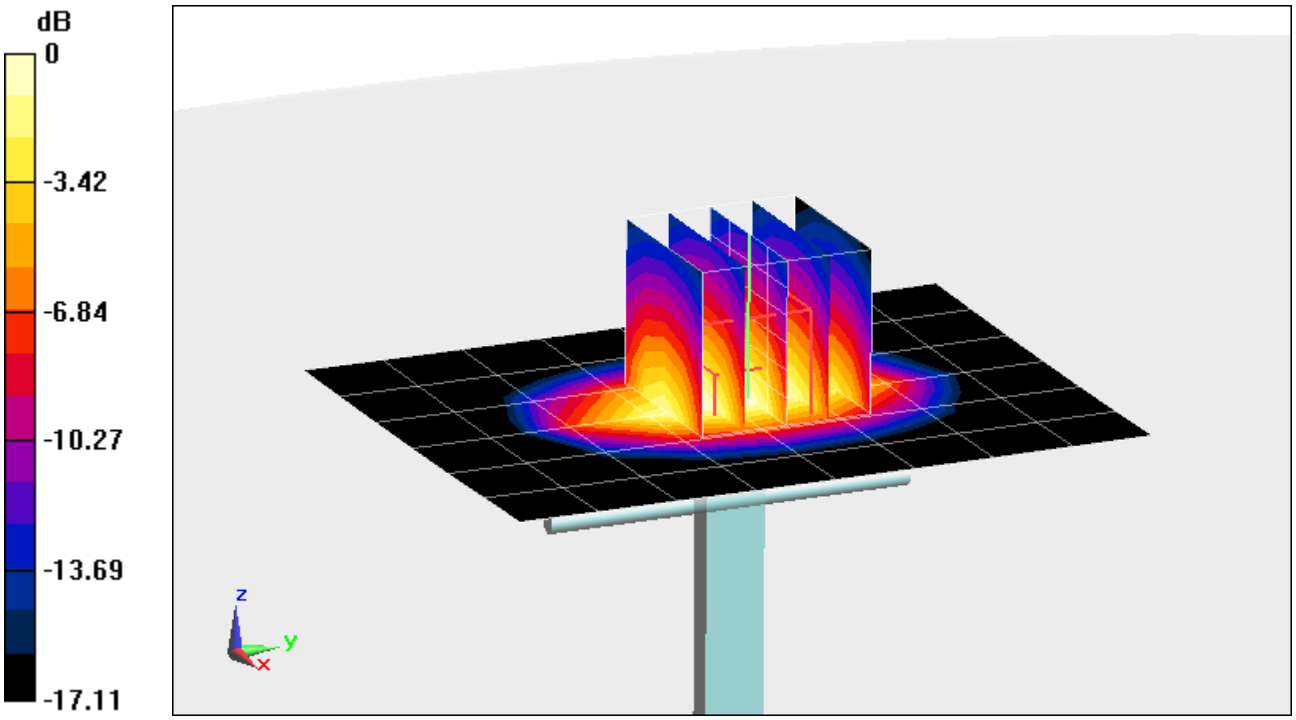

0 dB = 4.65 W/kg = 6.67 dBW/kg

PCTEST ENGINEERING LABORATORY, INC.

DUT: SAR Dipole 1900 MHz; Type: D1900V2; Serial: 5d141

Communication System: UID 0, CW; Frequency: 1900 MHz;Duty Cycle: 1:1
Medium: 1900 Body Medium parameters used (interpolated):
f = 1900 MHz; σ = 1.536 S/m; ε_r = 52.762; ρ = 1000 kg/m^3
Phantom section: Flat Section; Space: 1.0 cm

Test Date: 09-02-2014; Ambient Temp: 21.2°C; Tissue Temp: 21.9°C

Probe: ES3DV3 - SN3332; ConvF(4.7, 4.7, 4.7); Calibrated: 11/25/2013;
Sensor-Surface: 3mm (Mechanical Surface Detection)
Electronics: DAE4 Sn1407; Calibrated: 11/18/2013
Phantom: ELI v5.0; Type: QDOVA001BB; Serial: 1226
Measurement SW: DASY52, Version 52.8 (8); SEMCAD X Version 14.6.10 (7331)

1900 MHz System Verification

Area Scan (7x10x1): Measurement grid: dx=15mm, dy=15mm
Zoom Scan (5x5x7)/Cube 0: Measurement grid: dx=8mm, dy=8mm, dz=5mm
Input Power: 20.0 dBm (100 mW)
Peak SAR (extrapolated) = 7.16 W/kg
SAR(1 g) = 4.01 W/kg
Deviation(1 g): -1.23%

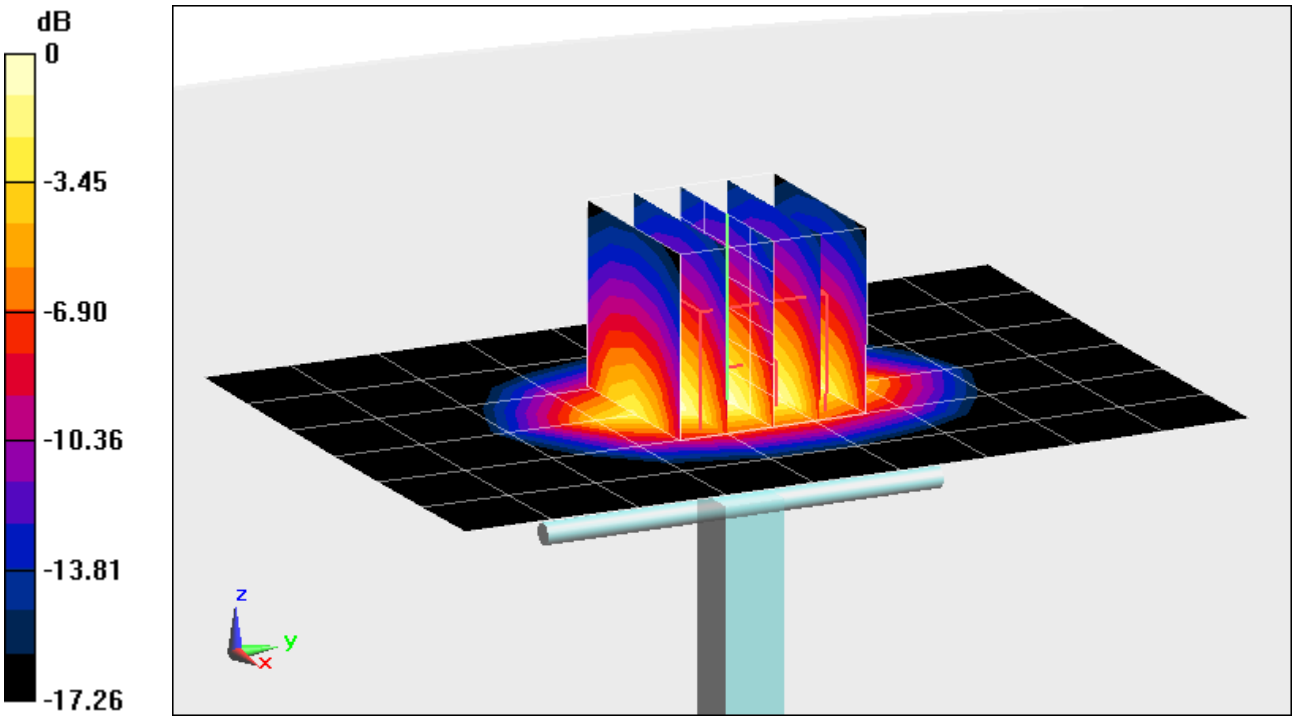

0 dB = 5.08 W/kg = 7.06 dBW/kg

PCTEST ENGINEERING LABORATORY, INC.

DUT: SAR Dipole 1900 MHz; Type: D1900V2; Serial: 5d141

Communication System: UID 0, CW; Frequency: 1900 MHz;Duty Cycle: 1:1
Medium: 1900 Body Medium parameters used (interpolated):
f = 1900 MHz; σ = 1.566 S/m; ε_r = 52.337; ρ = 1000 kg/m^3
Phantom section: Flat Section, Space: 1.0 cm

Test Date: 09-09-2014; Ambient Temp: 23.6°C; Tissue Temp: 23.2°C

Probe: ES3DV2 - SN3022; ConvF(4.49, 4.49, 4.49); Calibrated: 8/19/2014;
Sensor-Surface: 3mm (Mechanical Surface Detection)
Electronics: DAE4 Sn1322; Calibrated: 8/12/2014
Phantom: ELI v5.0; Type: QDOVA001BB; Serial: 1226
Measurement SW: DASY52, Version 52.8 (8); SEMCAD X Version 14.6.10 (7331)

1900 MHz System Verification

Area Scan (7x10x1): Measurement grid: dx=15mm, dy=15mm
Zoom Scan (5x5x7)/Cube 0: Measurement grid: dx=8mm, dy=8mm, dz=5mm
Input Power: 20.0 dBm (100 mW)
Peak SAR (extrapolated) = 7.24 W/kg
SAR(1 g) = 4.24 W/kg
Deviation(1 g): 4.43%

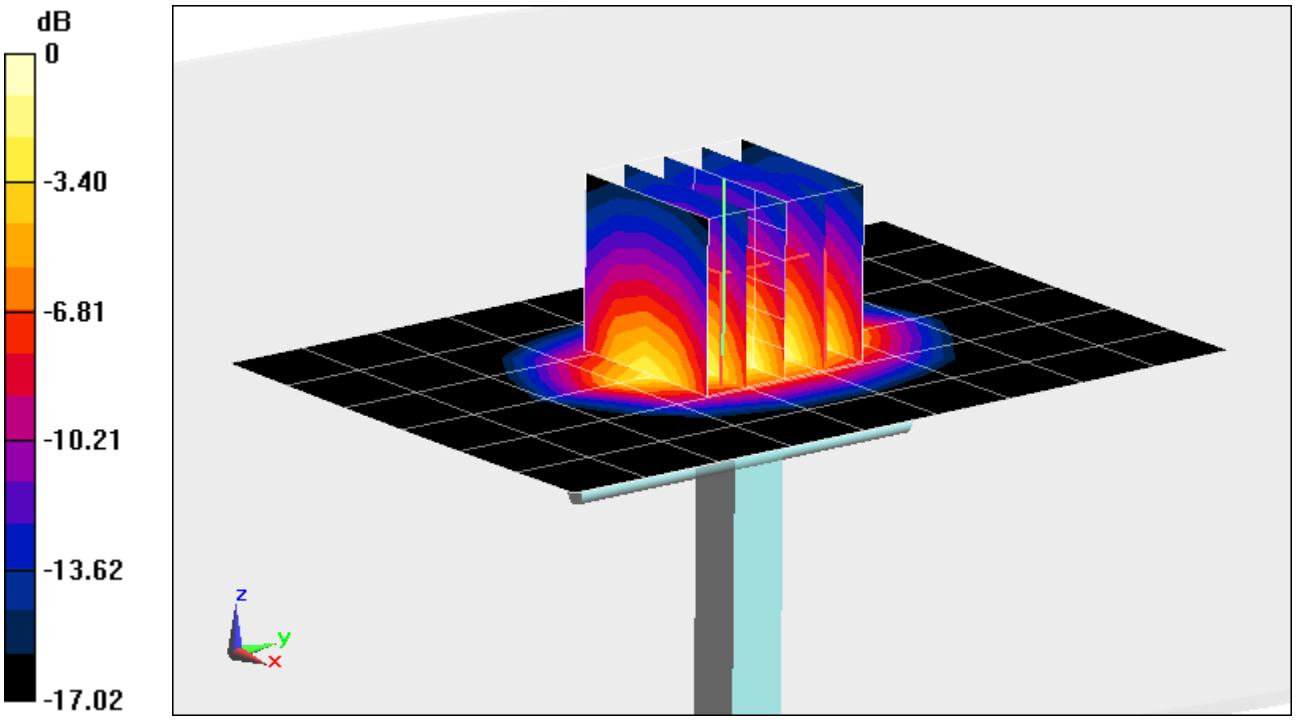

0 dB = 5.31 W/kg = 7.25 dBW/kg

PCTEST ENGINEERING LABORATORY, INC.

DUT: SAR Dipole 2450 MHz; Type: D2450V2; Serial: 797

Communication System: UID 0, CW; Frequency: 2450 MHz; Duty Cycle: 1:1
Medium: 2450 Body Medium parameters used:
f = 2450 MHz; σ = 1.903 S/m; ε_r = 50.849; ρ = 1000 kg/m^3
Phantom section: Flat Section; Space: 1.0 cm

Test Date: 08-07-2014; Ambient Temp: 23.9°C; Tissue Temp: 23.0°C

Probe: ES3DV3 - SN3319; ConvF(4.24, 4.24, 4.24); Calibrated: 4/17/2014;
Sensor-Surface: 3mm (Mechanical Surface Detection)
Electronics: DAE4 Sn1368; Calibrated: 4/11/2014
Phantom: ELI left; Type: QDOVA002AA; Serial: TP:1202
Measurement SW: DASY52, Version 52.8 (8); SEMCAD X Version 14.6.10 (7331)

2450 MHz System Verification

Area Scan (8x9x1): Measurement grid: dx=12mm, dy=12mm
Zoom Scan (7x7x7)/Cube 0: Measurement grid: dx=5mm, dy=5mm, dz=5mm
Input Power = 20.0 dBm (100 mW)
Peak SAR (extrapolated) = 11.0 W/kg
SAR(1 g) = 5.24 W/kg
Deviation(1 g): 6.07%

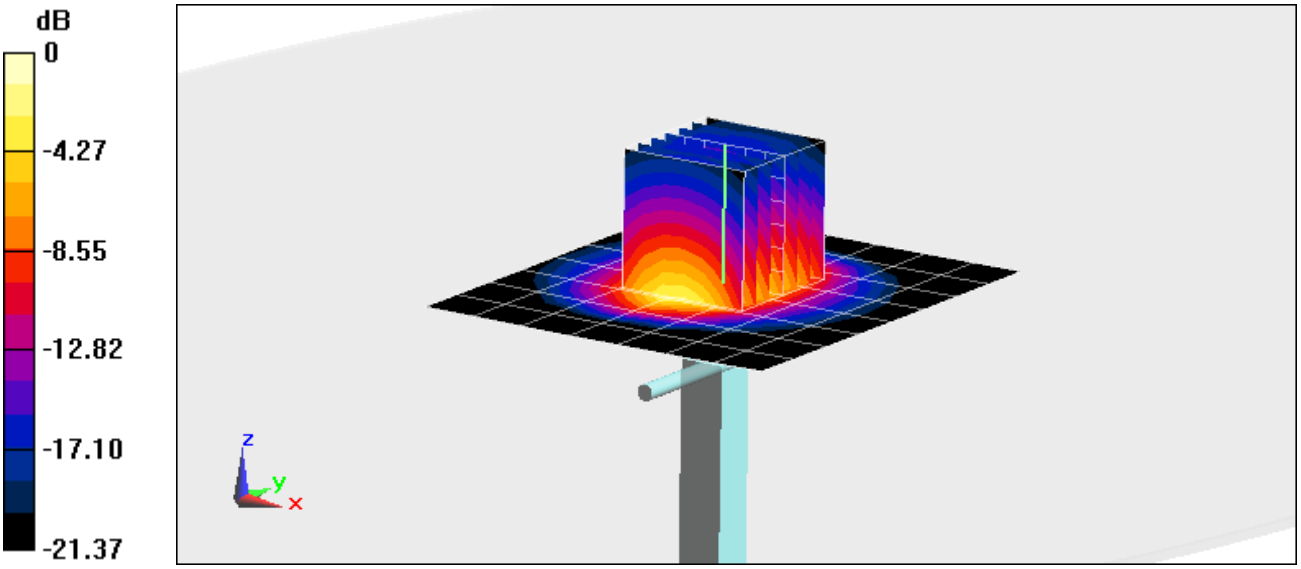

0 dB = 6.87 W/kg = 8.37 dBW/kg

PCTEST ENGINEERING LABORATORY, INC.

DUT: SAR Dipole 5200 MHz; Type: D5GHzV2; Serial: 1007

Communication System: UID 0, CW; Frequency: 5200 MHz;Duty Cycle: 1:1
Medium: 5 GHz Body Medium parameters used:
f = 5200 MHz; σ = 5.365 S/m; ε_r = 47.684; ρ = 1000 kg/m^3
Phantom section: Flat Section; Space: 1.0 cm

Test Date: 08-11-2014; Ambient Temp: 22.4°C; Tissue Temp: 21.3°C

Probe: EX3DV4 - SN3920; ConvF(4.23, 4.23, 4.23); Calibrated: 12/18/2013;
Sensor-Surface: 1.4mm (Mechanical Surface Detection)
Electronics: DAE4 Sn649; Calibrated: 12/12/2013
Phantom: SAM Sub; Type: SAM 4.0; Serial: TP-1357
Measurement SW: DASY4, Version 4.7 (80);SEMCAD X Version 14.6.10 (7331)

5200 MHz System Verification

Area Scan (7x9x1): Measurement grid: dx=10mm, dy=10mm
Zoom Scan (9x9x7)/Cube 0: Measurement grid: dx=4mm, dy=4mm, dz=1.4mm; Graded Ratio: 1.4
Input Power = 20.0 dBm (100 mW)
Peak SAR (extrapolated) = 28.6 W/kg
SAR(1 g) = 7.51 W/kg
Deviation(1 g): 3.44%

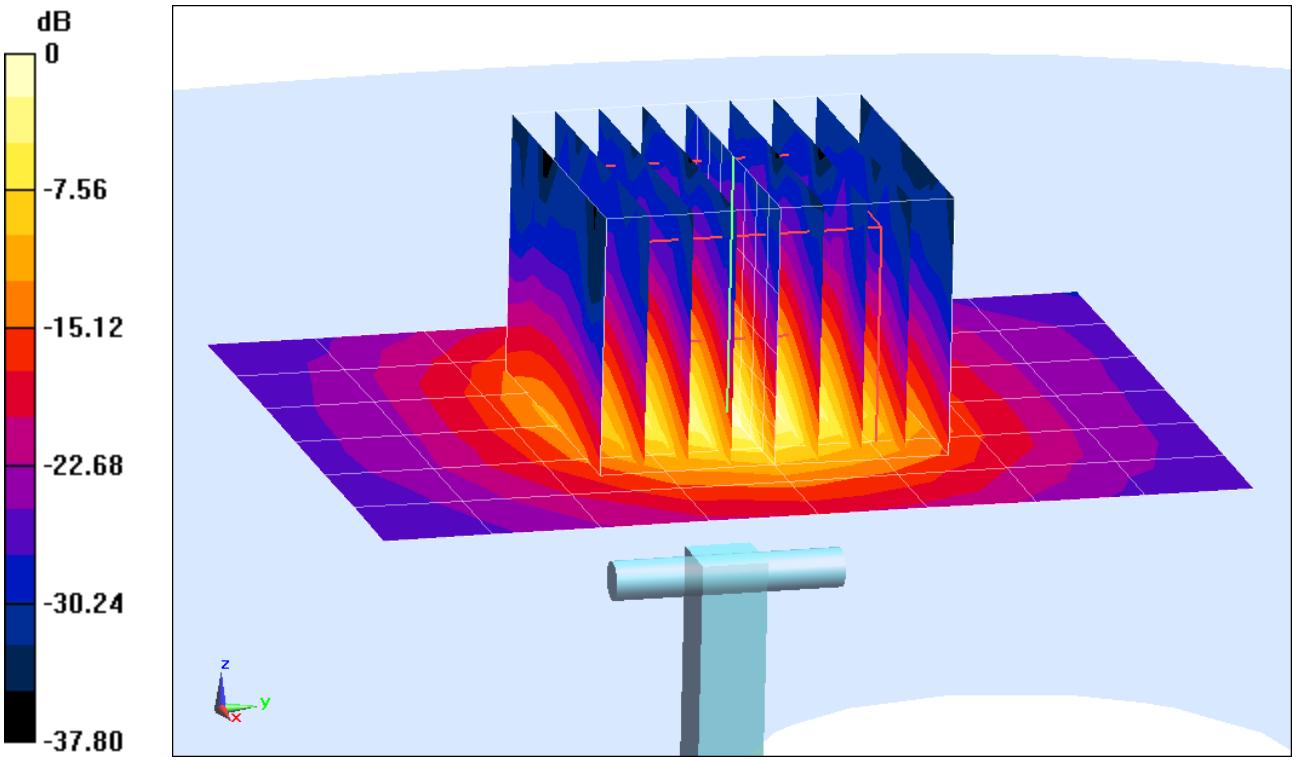

0 dB = 19.1 W/kg = 12.81 dBW/kg

PCTEST ENGINEERING LABORATORY, INC.

DUT: SAR Dipole 5300 MHz; Type: D5GHzV2; Serial: 1007

Communication System: UID 0, CW; Frequency: 5300 MHz;Duty Cycle: 1:1
Medium: 5 GHz Body Medium parameters used:
f = 5300 MHz; σ = 5.483 S/m; ε_r = 47.707; ρ = 1000 kg/m^3
Phantom section: Flat Section; Space: 1.0 cm

Test Date: 08-11-2014; Ambient Temp: 22.4°C; Tissue Temp: 21.3°C

Probe: EX3DV4 - SN3920; ConvF(4.11, 4.11, 4.11); Calibrated: 12/18/2013;
Sensor-Surface: 1.4mm (Mechanical Surface Detection)
Electronics: DAE4 Sn649; Calibrated: 12/12/2013
Phantom: SAM Sub; Type: SAM 4.0; Serial: TP-1357
Measurement SW: DASY4, Version 4.7 (80);SEMCAD X Version 14.6.10 (7331)

5300 MHz System Verification

Area Scan (7x9x1): Measurement grid: dx=10mm, dy=10mm
Zoom Scan (9x9x7)/Cube 0: Measurement grid: dx=4mm, dy=4mm, dz=1.4mm; Graded Ratio: 1.4
Input Power = 20.0 dBm (100 mW)
Peak SAR (extrapolated) = 29.5 W/kg
SAR(1 g) = 7.72 W/kg
Deviation(1 g): 3.35%

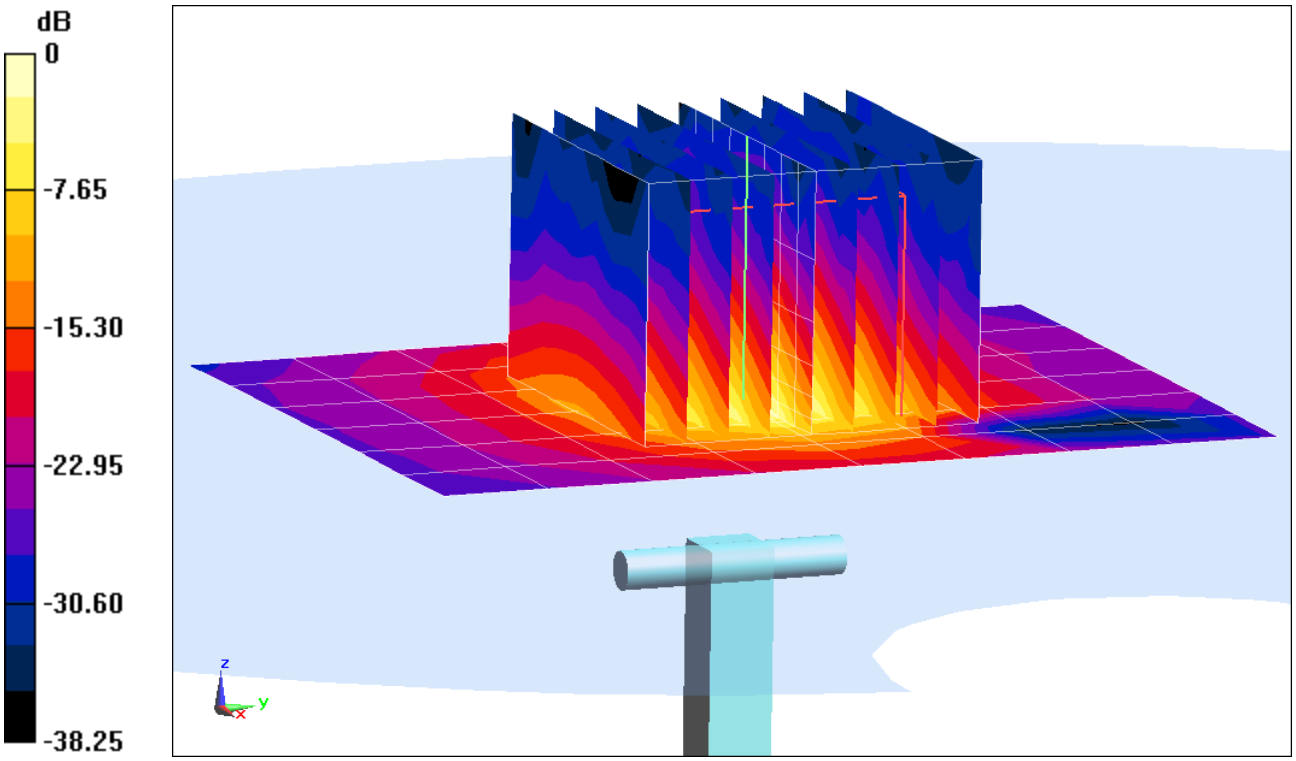

0 dB = 18.9 W/kg = 12.76 dBW/kg

PCTEST ENGINEERING LABORATORY, INC.

DUT: SAR Dipole 5500 MHz; Type: D5GHzV2; Serial: 1007

Communication System: UID 0, CW; Frequency: 5500 MHz;Duty Cycle: 1:1
Medium: 5 GHz Body Medium parameters used:
f = 5500 MHz; σ = 5.726 S/m; ε_r = 47.237; ρ = 1000 kg/m^3
Phantom section: Flat Section; Space: 1.0 cm

Test Date: 08-11-2014; Ambient Temp: 22.4°C; Tissue Temp: 21.3°C

Probe: EX3DV4 - SN3920; ConvF(3.8, 3.8, 3.8); Calibrated: 12/18/2013;
Sensor-Surface: 1.4mm (Mechanical Surface Detection)
Electronics: DAE4 Sn649; Calibrated: 12/12/2013
Phantom: SAM Sub; Type: SAM 4.0; Serial: TP-1357
Measurement SW: DASY4, Version 4.7 (80);SEMCAD X Version 14.6.10 (7331)

5500 MHz System Verification

Area Scan (7x9x1): Measurement grid: dx=10mm, dy=10mm
Zoom Scan (9x9x7)/Cube 0: Measurement grid: dx=4mm, dy=4mm, dz=1.4mm; Graded Ratio: 1.4
Input Power = 20.0 dBm (100 mW)
Peak SAR (extrapolated) = 30.7 W/kg
SAR(1 g) = 7.81 W/kg
Deviation(1 g): 2.90%

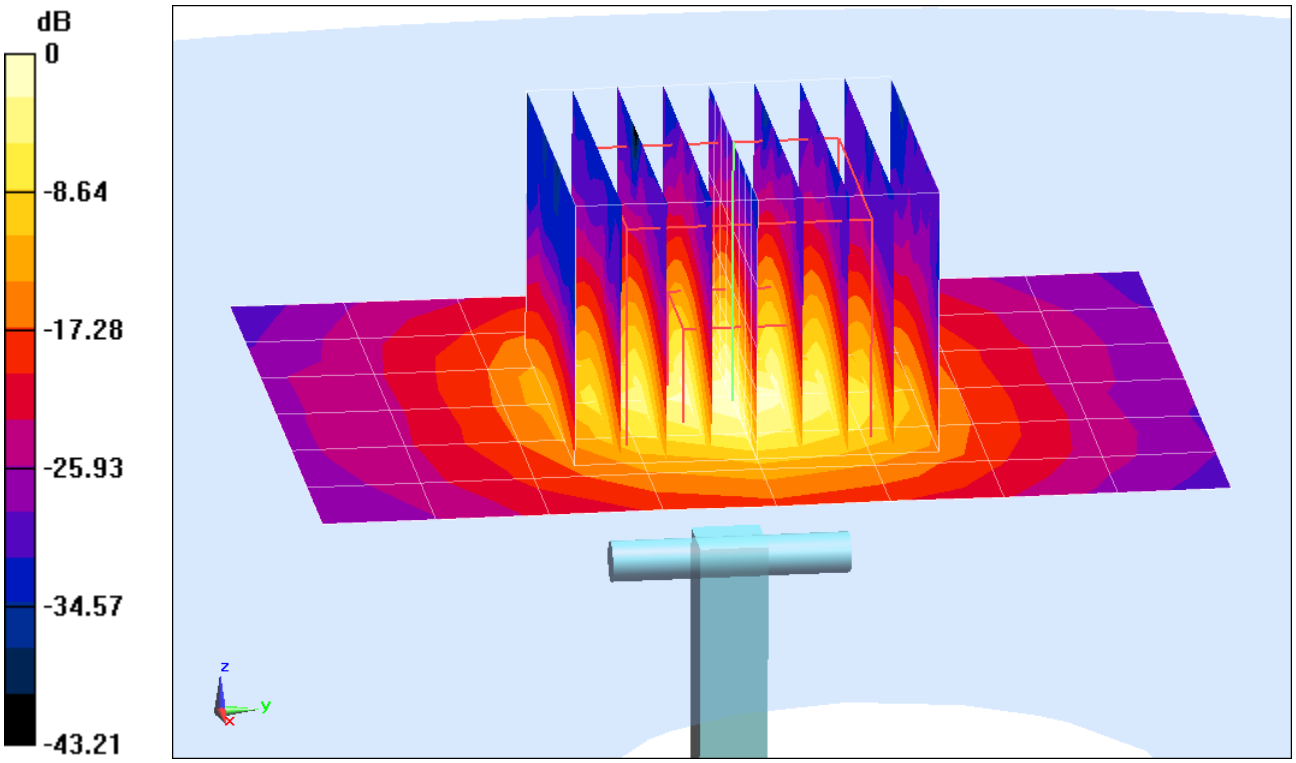

0 dB = 19.8 W/kg = 12.97 dBW/kg

PCTEST ENGINEERING LABORATORY, INC.

DUT: SAR Dipole 5600 MHz; Type: D5GHzV2; Serial: 1007

Communication System: UID 0, CW; Frequency: 5600 MHz;Duty Cycle: 1:1
Medium: 5 GHz Body Medium parameters used:
f = 5600 MHz; σ = 5.861 S/m; ε_r = 46.839; ρ = 1000 kg/m^3
Phantom section: Flat Section; Space: 1.0 cm

Test Date: 08-11-2014; Ambient Temp: 22.4°C; Tissue Temp: 21.3°C

Probe: EX3DV4 - SN3920; ConvF(3.62, 3.62, 3.62); Calibrated: 12/18/2013;
Sensor-Surface: 1.4mm (Mechanical Surface Detection)
Electronics: DAE4 Sn649; Calibrated: 12/12/2013
Phantom: SAM Sub; Type: SAM 4.0; Serial: TP-1357
Measurement SW: DASY4, Version 4.7 (80);SEMCAD X Version 14.6.10 (7331)

5600 MHz System Verification

Area Scan (7x9x1): Measurement grid: dx=10mm, dy=10mm
Zoom Scan (9x9x7)/Cube 0: Measurement grid: dx=4mm, dy=4mm, dz=1.4mm; Graded Ratio: 1.4
Input Power = 20.0 dBm (100 mW)
Peak SAR (extrapolated) = 32.1 W/kg
SAR(1 g) = 7.66 W/kg
Deviation(1 g): -0.91%

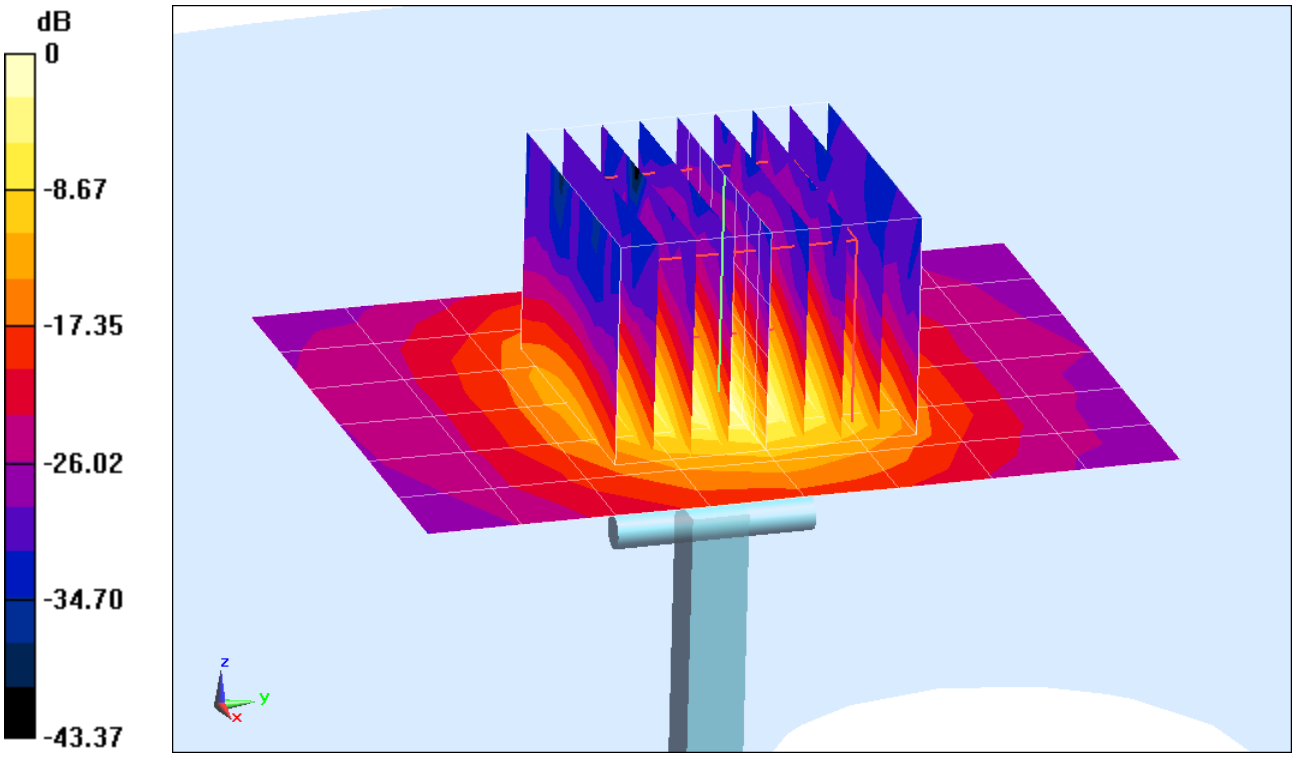

0 dB = 19.6 W/kg = 12.92 dBW/kg

PCTEST ENGINEERING LABORATORY, INC.

DUT: SAR Dipole 5800 MHz; Type: D5GHzV2; Serial: 1007

Communication System: UID 0, CW; Frequency: 5800 MHz;Duty Cycle: 1:1
Medium: 5 GHz Body Medium parameters used:
f = 5800 MHz; σ = 6.062 S/m; ε_r = 45.948; ρ = 1000 kg/m^3
Phantom section: Flat Section; Space: 1.0 cm

Test Date: 08-11-2014; Ambient Temp: 22.4°C; Tissue Temp: 21.3°C

Probe: EX3DV4 - SN3920; ConvF(4, 4, 4); Calibrated: 12/18/2013;
Sensor-Surface: 1.4mm (Mechanical Surface Detection)
Electronics: DAE4 Sn649; Calibrated: 12/12/2013
Phantom: SAM Sub; Type: SAM 4.0; Serial: TP-1357
Measurement SW: DASY4, Version 4.7 (80);SEMCAD X Version 14.6.10 (7331)

5800 MHz System Verification

Area Scan (7x9x1): Measurement grid: dx=10mm, dy=10mm
Zoom Scan (9x9x7)/Cube 0: Measurement grid: dx=4mm, dy=4mm, dz=1.4mm; Graded Ratio: 1.4
Input Power = 20.0 dBm (100 mW)
Peak SAR (extrapolated) = 35.4 W/kg
SAR(1 g) = 7.23 W/kg
Deviation(1 g): -0.82%

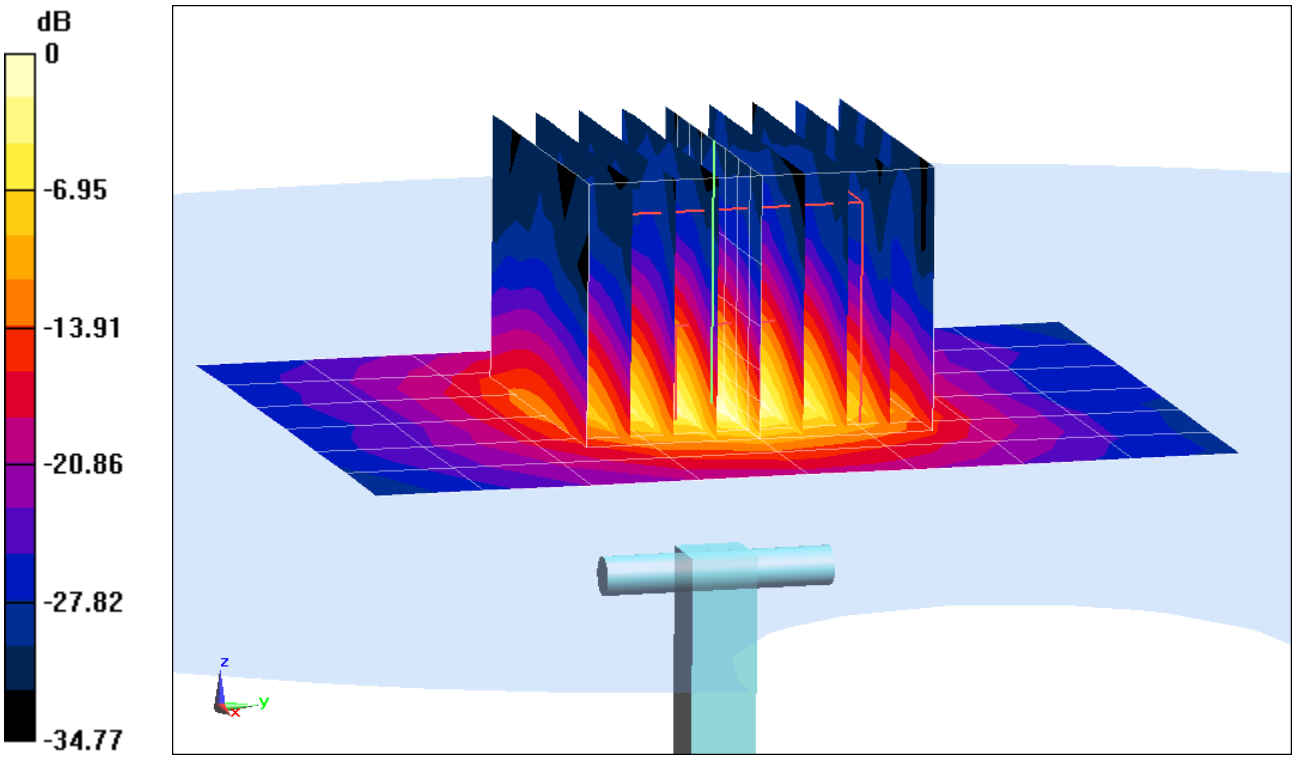

0 dB = 18.7 W/kg = 12.72 dBW/kg

PCTEST ENGINEERING LABORATORY, INC.

DUT: SAR Dipole 5800 MHz; Type: D5GHzV2; Serial: 1057

Communication System: UID 0, CW; Frequency: 5800 MHz; Duty Cycle: 1:1
Medium: 5 GHz Body, Medium parameters used:
f = 5800 MHz; σ = 6.186 S/m; ε_r = 46.881; ρ = 1000 kg/m^3
Phantom section: Flat Section; Space: 1.0 cm

Test Date: 08-13-2014; Ambient Temp: 24.4°C; Tissue Temp: 24.0°C

Probe: EX3DV4 - SN3589; ConvF(3.97, 3.97, 3.97); Calibrated: 1/29/2014;
Sensor-Surface: 1.4mm (Mechanical Surface Detection)
Electronics: DAE4 Sn1334; Calibrated: 3/17/2014
Phantom: SAM front; Type: QD000P40CD; Serial: TP:1759
Measurement SW: DASY52, Version 52.8 (8); SEMCAD X Version 14.6.10 (7331)

5800 MHz System Verification

Area Scan (7x8x1): Measurement grid: dx=10mm, dy=10mm
Zoom Scan (9x9x7)/Cube 0: Measurement grid: dx=4mm, dy=4mm, dz=1.4mm; Graded Ratio: 1.4

Input Power = 20.0 dBm (100 mW)
Peak SAR (extrapolated) = 35.8 W/kg
SAR(1 g) = 7.35 W/kg
Deviation(1 g): -1.08%

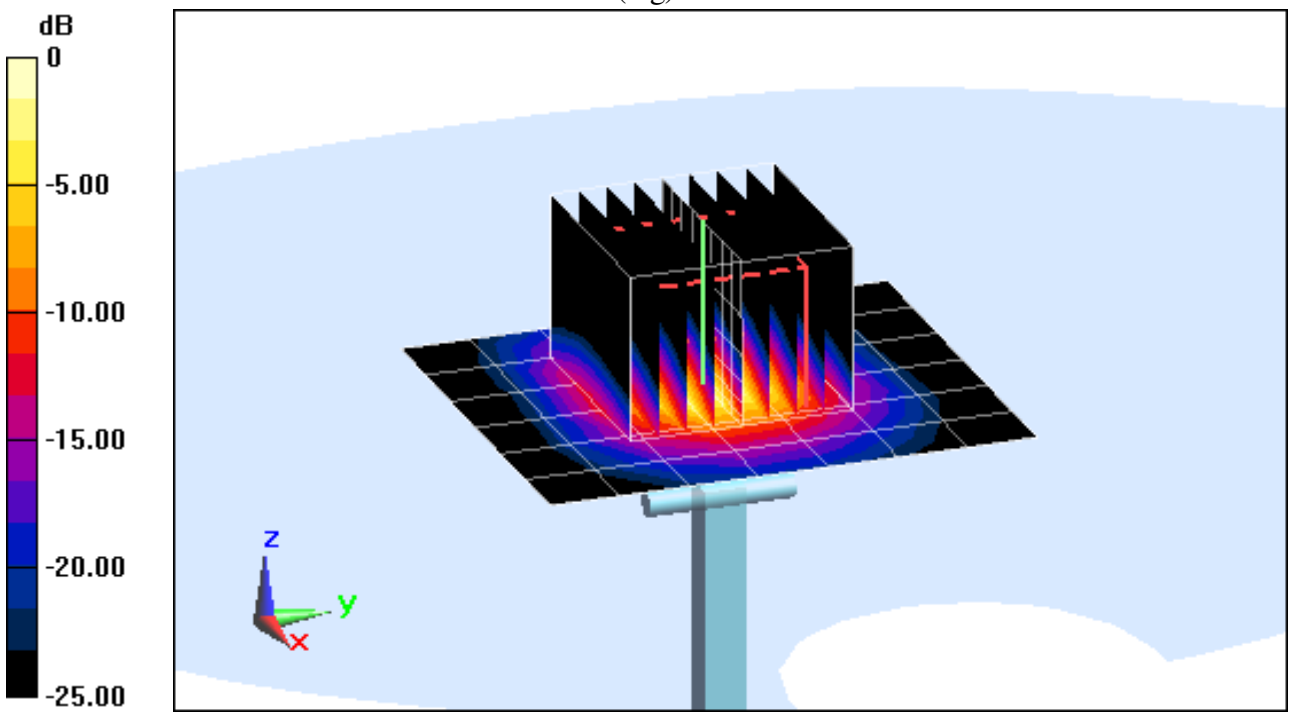

0 dB = 19.8 W/kg = 12.97 dBW/kg

PCTEST ENGINEERING LABORATORY, INC.

DUT: SAR Dipole 5200 MHz; Type: D5GHzV2; Serial: 1057

Communication System: UID 0, CW; Frequency: 5200 MHz; Duty Cycle: 1:1
Medium: 5 GHz Body Medium parameters used:
f = 5200 MHz; σ = 5.262 S/m; ε_r = 48.246; ρ = 1000 kg/m^3
Phantom section: Flat Section; Space: 1.0 cm

Test Date: 08-13-2014; Ambient Temp: 24.4°C; Tissue Temp: 24.0°C

Probe: EX3DV4 - SN3589; ConvF(4.19, 4.19, 4.19); Calibrated: 1/29/2014;
Sensor-Surface: 1.4mm (Mechanical Surface Detection)
Electronics: DAE4 Sn1334; Calibrated: 3/17/2014
Phantom: SAM front; Type: QD000P40CD; Serial: TP:1759
Measurement SW: DASY52, Version 52.8 (8);SEMCAD X Version 14.6.10 (7331)

5200 MHz System Verification

Area Scan (7x8x1): Measurement grid: dx=10mm, dy=10mm
Zoom Scan (7x7x7)/Cube 0: Measurement grid: dx=4mm, dy=4mm, dz=1.4mm; Graded Ratio: 1.4
Input Power = 20.0 dBm (100 mW)
Peak SAR (extrapolated) = 33.8 W/kg
SAR(10 g) = 2.25 W/kg
Deviation (10 g): 7.14%

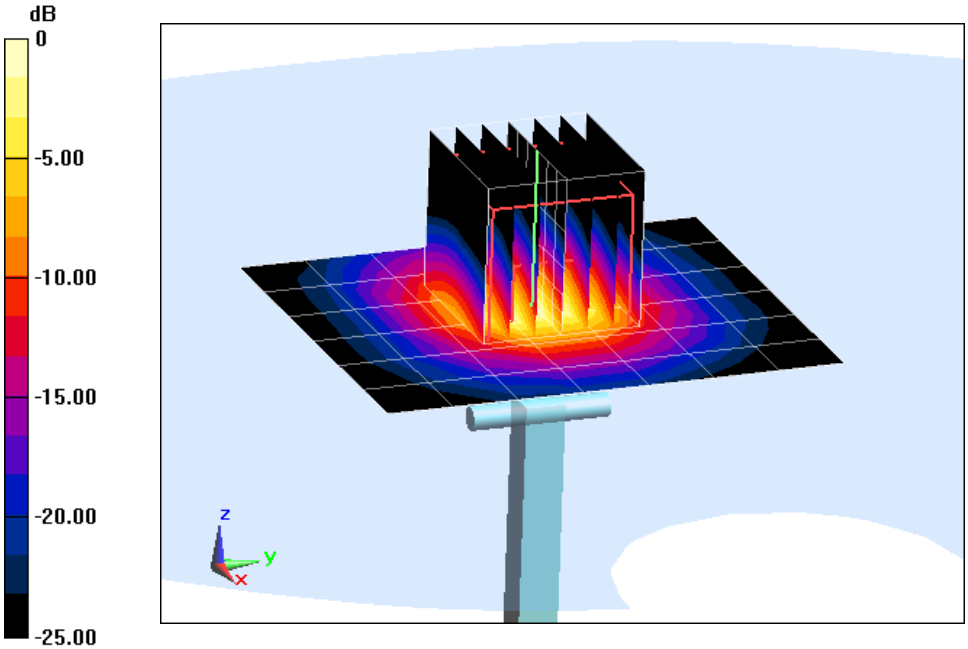

0 dB = 20.3 W/kg = 13.07 dBW/kg

PCTEST ENGINEERING LABORATORY, INC.

DUT: SAR Dipole 5300 MHz; Type: D5GHzV2; Serial: 1057

Communication System: UID 0, CW; Frequency: 5300 MHz; Duty Cycle: 1:1
Medium: 5 GHz Body Medium parameters used:
f = 5300 MHz; σ = 5.427 S/m; ε_r = 48.087; ρ = 1000 kg/m^3
Phantom section: Flat Section ; Space: 1.0 cm

Test Date: 08-13-2014; Ambient Temp: 24.4°C; Tissue Temp: 24.1°C

Probe: EX3DV4 - SN3589; ConvF(3.98, 3.98, 3.98); Calibrated: 1/29/2014;
Sensor-Surface: 1.4mm (Mechanical Surface Detection)
Electronics: DAE4 Sn1334; Calibrated: 3/17/2014
Phantom: SAM front; Type: QD000P40CD; Serial: TP:1759
Measurement SW: DASY52, Version 52.8 (8);SEMCAD X Version 14.6.10 (7331)

5300 MHz System Verification

Area Scan (7x8x1): Measurement grid: dx=10mm, dy=10mm
Zoom Scan (7x7x7)/Cube 0: Measurement grid: dx=4mm, dy=4mm, dz=1.4mm; Graded Ratio: 1.4
Input Power = 20.0 dBm (100 mW)
Peak SAR (extrapolated) = 36.4 W/kg
SAR(10 g) = 2.33 W/kg
Deviation (10 g): 8.37%

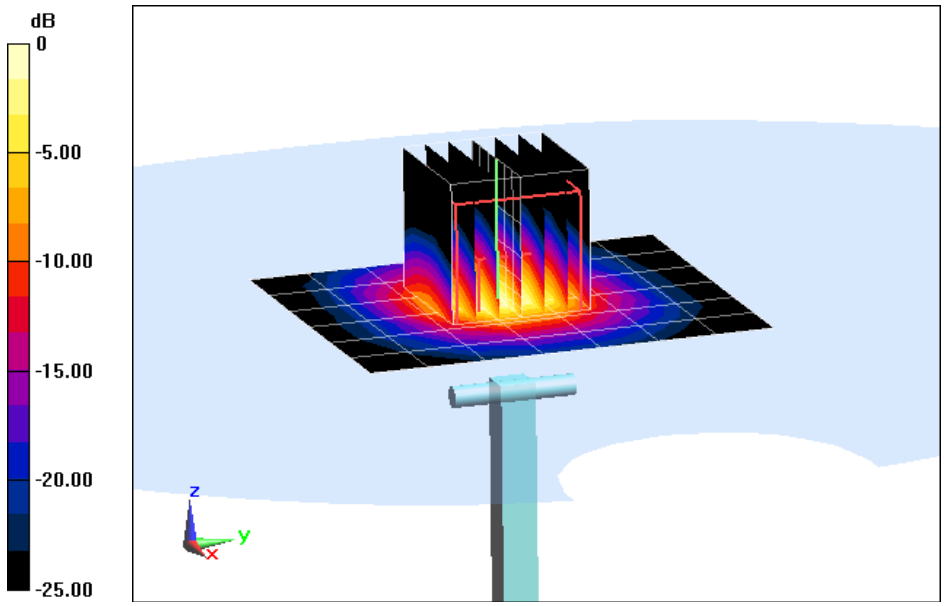

0 dB = 21.5 W/kg = 13.32 dBW/kg

PCTEST ENGINEERING LABORATORY, INC.

DUT: SAR Dipole 5500 MHz; Type: D5GHzV2; Serial: 1057

Communication System: UID 0, CW; Frequency: 5500 MHz; Duty Cycle: 1:1
Medium: 5 GHz Body Medium parameters used:
f = 5500 MHz; σ = 5.733 S/m; ε_r = 47.55; ρ = 1000 kg/m^3
Phantom section: Flat Section; Space: 1.0 cm

Test Date: 08-13-2014; Ambient Temp: 24.3°C; Tissue Temp: 23.9°C

Probe: EX3DV4 - SN3589; ConvF(3.76, 3.76, 3.76); Calibrated: 1/29/2014;
Sensor-Surface: 1.4mm (Mechanical Surface Detection)
Electronics: DAE4 Sn1334; Calibrated: 3/17/2014
Phantom: SAM front; Type: QD000P40CD; Serial: TP:1759
Measurement SW: DASY52, Version 52.8 (8);SEMCAD X Version 14.6.10 (7331)

5500 MHz System Verification

Area Scan (7x8x1): Measurement grid: dx=10mm, dy=10mm
Zoom Scan (9x9x7)/Cube 0: Measurement grid: dx=4mm, dy=4mm, dz=1.4mm; Graded Ratio: 1.4
Input Power = 20.0 dBm (100 mW)
Peak SAR (extrapolated) = 37.5 W/kg
SAR(10 g) = 2.3 W/kg
Deviation (10 g): 4.55%

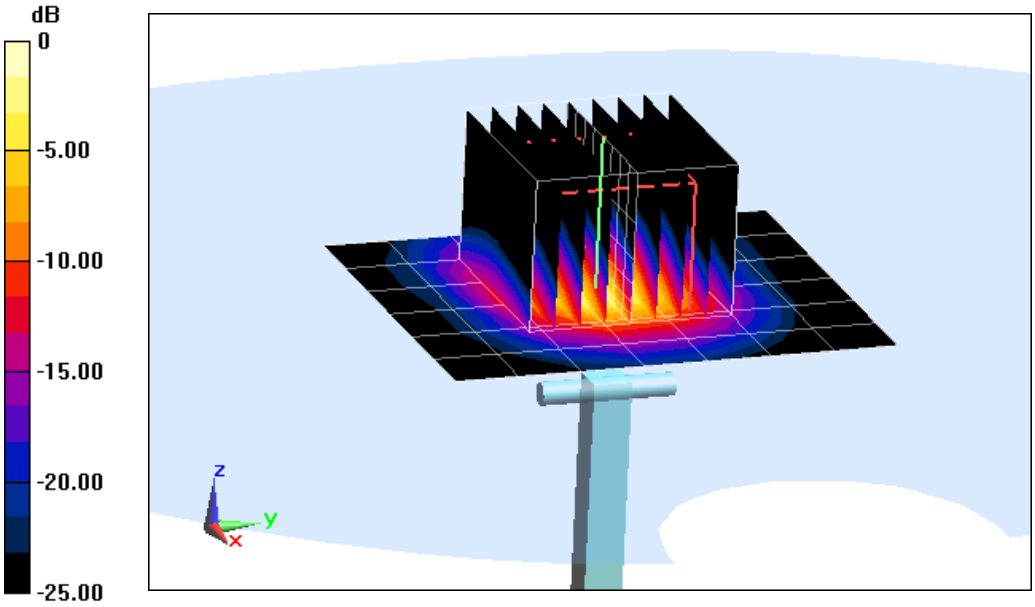

0 dB = 21.7 W/kg = 13.36 dBW/kg

PCTEST ENGINEERING LABORATORY, INC.

DUT: SAR Dipole 5600 MHz; Type: D5GHzV2; Serial: 1057

Communication System: UID 0, CW; Frequency: 5600 MHz; Duty Cycle: 1:1
Medium: 5 GHz Body Medium parameters used:
f = 5600 MHz; σ = 5.871 S/m; ε_r = 47.349; ρ = 1000 kg/m^3
Phantom section: Flat Section; Space: 1.0 cm

Test Date: 08-13-2014; Ambient Temp: 24.2°C; Tissue Temp: 23.9°C

Probe: EX3DV4 - SN3589; ConvF(3.81, 3.81, 3.81); Calibrated: 1/29/2014;
Sensor-Surface: 1.4mm (Mechanical Surface Detection)
Electronics: DAE4 Sn1334; Calibrated: 3/17/2014
Phantom: SAM front; Type: QD000P40CD; Serial: TP:1759
Measurement SW: DASY52, Version 52.8 (8);SEMCAD X Version 14.6.10 (7331)

5600 MHz System Verification

Area Scan (7x8x1): Measurement grid: dx=10mm, dy=10mm
Zoom Scan (7x7x7)/Cube 0: Measurement grid: dx=4mm, dy=4mm, dz=1.4mm; Graded Ratio: 1.4
Input Power = 20.0 dBm (100 mW)
Peak SAR (extrapolated) = 40.4 W/kg
SAR(10 g) = 2.24 W/kg
Deviation (10 g): 0.90%

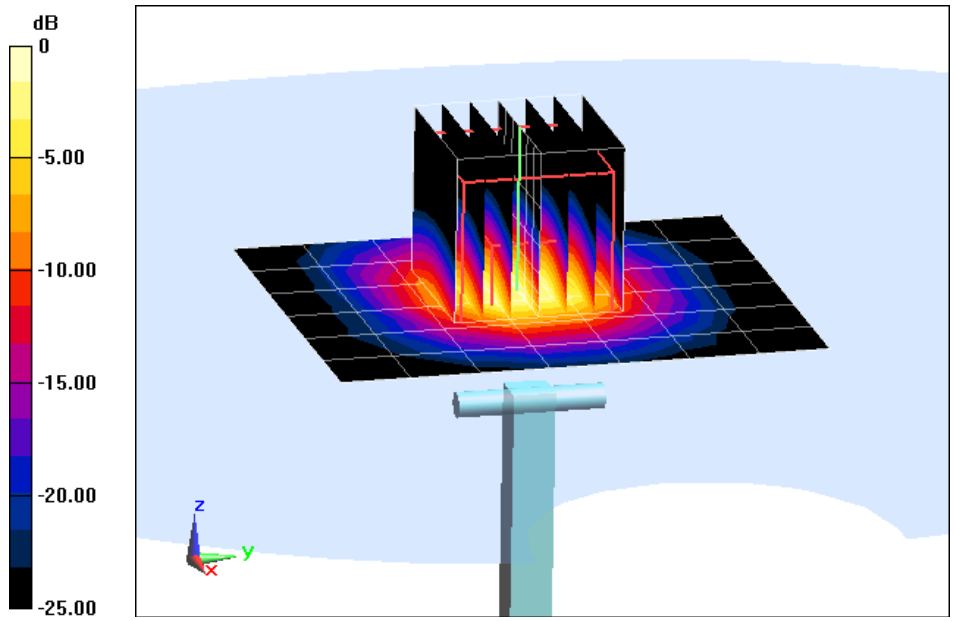

0 dB = 21.6 W/kg = 13.34 dBW/kg

APPENDIX C: PROBE CALIBRATION

© 2014 PCTEST Engineering Laboratory, Inc.

Calibration Laboratory of
Schmid & Partner
Engineering AG
Zeughausstrasse 43, 8004 Zurich, Switzerland

S Schweizerischer Kalibrierdienst
C Service suisse d'étalonnage
Servizio svizzero di taratura
S Swiss Calibration Service

Accredited by the Swiss Accreditation Service (SAS)
The Swiss Accreditation Service is one of the signatories to the EA Multilateral Agreement for the recognition of calibration certificates

Accreditation No.: SCS 108

Client **PC Test**

Certificate No: D750V3-1003_Jan14

CALIBRATION CERTIFICATE

Object	D750V3 - SN: 1003
Calibration procedure(s)	QA CAL-05.v9 Calibration procedure for dipole validation kits above 700 MHz
Calibration date:	January 20, 2014

CC ✓ 2/5/14

This calibration certificate documents the traceability to national standards, which realize the physical units of measurements (SI).
The measurements and the uncertainties with confidence probability are given on the following pages and are part of the certificate.

All calibrations have been conducted in the closed laboratory facility: environment temperature (22 ± 3)°C and humidity < 70%.

Calibration Equipment used (M&TE critical for calibration)

Primary Standards	ID #	Cal Date (Certificate No.)	Scheduled Calibration
Power meter EPM-442A	GB37480704	09-Oct-13 (No. 217-01827)	Oct-14
Power sensor HP 8481A	US37292783	09-Oct-13 (No. 217-01827)	Oct-14
Power sensor HP 8481A	MY41092317	09-Oct-13 (No. 217-01828)	Oct-14
Reference 20 dB Attenuator	SN: 5058 (20k)	04-Apr-13 (No. 217-01736)	Apr-14
Type-N mismatch combination	SN: 5047.3 / 06327	04-Apr-13 (No. 217-01739)	Apr-14
Reference Probe ES3DV3	SN: 3205	30-Dec-13 (No. ES3-3205_Dec13)	Dec-14
DAE4	SN: 601	25-Apr-13 (No. DAE4-601_Apr13)	Apr-14

Secondary Standards	ID #	Check Date (in house)	Scheduled Check
RF generator R&S SMT-06	100005	04-Aug-99 (in house check Oct-13)	In house check: Oct-16
Network Analyzer HP 8753E	US37390585 S4206	18-Oct-01 (in house check Oct-13)	In house check: Oct-14

	Name	Function	Signature
Calibrated by:	Israe El-Naouq	Laboratory Technician	Israe El-Naouq
Approved by:	Katja Pokovic	Technical Manager	

Issued: January 21, 2014

This calibration certificate shall not be reproduced except in full without written approval of the laboratory.

PCT# 80200

Glossary:

TSL	tissue simulating liquid
ConvF	sensitivity in TSL / NORM x,y,z
N/A	not applicable or not measured

Calibration is Performed According to the Following Standards:

a) IEEE Std 1528-2013, "IEEE Recommended Practice for Determining the Peak Spatial-Averaged Specific Absorption Rate (SAR) in the Human Head from Wireless Communications Devices: Measurement Techniques", June 2013
b) IEC 62209-1, "Procedure to measure the Specific Absorption Rate (SAR) for hand-held devices used in close proximity to the ear (frequency range of 300 MHz to 3 GHz)", February 2005
c) KDB 865664, "SAR Measurement Requirements for 100 MHz to 6 GHz"

Additional Documentation:

d) DASY4/5 System Handbook

Methods Applied and Interpretation of Parameters:

- *Measurement Conditions:* Further details are available from the Validation Report at the end of the certificate. All figures stated in the certificate are valid at the frequency indicated.
- *Antenna Parameters with TSL:* The dipole is mounted with the spacer to position its feed point exactly below the center marking of the flat phantom section, with the arms oriented parallel to the body axis.
- *Feed Point Impedance and Return Loss:* These parameters are measured with the dipole positioned under the liquid filled phantom. The impedance stated is transformed from the measurement at the SMA connector to the feed point. The Return Loss ensures low reflected power. No uncertainty required.
- *Electrical Delay:* One-way delay between the SMA connector and the antenna feed point. No uncertainty required.
- *SAR measured:* SAR measured at the stated antenna input power.
- *SAR normalized:* SAR as measured, normalized to an input power of 1 W at the antenna connector.
- *SAR for nominal TSL parameters:* The measured TSL parameters are used to calculate the nominal SAR result.

The reported uncertainty of measurement is stated as the standard uncertainty of measurement multiplied by the coverage factor k=2, which for a normal distribution corresponds to a coverage probability of approximately 95%.

Measurement Conditions

DASY system configuration, as far as not given on page 1.

DASY Version	DASY5	V52.8.7
Extrapolation	Advanced Extrapolation	
Phantom	Modular Flat Phantom	
Distance Dipole Center - TSL	15 mm	with Spacer
Zoom Scan Resolution	dx, dy, dz = 5 mm	
Frequency	750 MHz ± 1 MHz	

Head TSL parameters

The following parameters and calculations were applied.

	Temperature	**Permittivity**	**Conductivity**
Nominal Head TSL parameters	22.0 °C	41.9	0.89 mho/m
Measured Head TSL parameters	(22.0 ± 0.2) °C	40.8 ± 6 %	0.92 mho/m ± 6 %
Head TSL temperature change during test	< 0.5 °C	----	----

SAR result with Head TSL

SAR averaged over 1 cm^3 (1 g) of Head TSL	Condition	
SAR measured	250 mW input power	2.16 W/kg
SAR for nominal Head TSL parameters	normalized to 1W	**8.37 W/kg ± 17.0 % (k=2)**

SAR averaged over 10 cm^3 (10 g) of Head TSL	condition	
SAR measured	250 mW input power	1.40 W/kg
SAR for nominal Head TSL parameters	normalized to 1W	**5.46 W/kg ± 16.5 % (k=2)**

Body TSL parameters

The following parameters and calculations were applied.

	Temperature	**Permittivity**	**Conductivity**
Nominal Body TSL parameters	22.0 °C	55.5	0.96 mho/m
Measured Body TSL parameters	(22.0 ± 0.2) °C	54.0 ± 6 %	0.98 mho/m ± 6 %
Body TSL temperature change during test	< 0.5 °C	----	----

SAR result with Body TSL

SAR averaged over 1 cm^3 (1 g) of Body TSL	Condition	
SAR measured	250 mW input power	2.24 W/kg
SAR for nominal Body TSL parameters	normalized to 1W	**8.77 W/kg ± 17.0 % (k=2)**

SAR averaged over 10 cm^3 (10 g) of Body TSL	condition	
SAR measured	250 mW input power	1.47 W/kg
SAR for nominal Body TSL parameters	normalized to 1W	**5.78 W/kg ± 16.5 % (k=2)**

Appendix

Antenna Parameters with Head TSL

Impedance, transformed to feed point	54.7 Ω - 0.2 jΩ
Return Loss	- 27.0 dB

Antenna Parameters with Body TSL

Impedance, transformed to feed point	49.5 Ω - 2.6 jΩ
Return Loss	- 31.4 dB

General Antenna Parameters and Design

Electrical Delay (one direction)	1.043 ns

After long term use with 100W radiated power, only a slight warming of the dipole near the feedpoint can be measured.

The dipole is made of standard semirigid coaxial cable. The center conductor of the feeding line is directly connected to the second arm of the dipole. The antenna is therefore short-circuited for DC-signals. On some of the dipoles, small end caps are added to the dipole arms in order to improve matching when loaded according to the position as explained in the "Measurement Conditions" paragraph. The SAR data are not affected by this change. The overall dipole length is still according to the Standard.
No excessive force must be applied to the dipole arms, because they might bend or the soldered connections near the feedpoint may be damaged.

Additional EUT Data

Manufactured by	SPEAG
Manufactured on	January 21, 2009

DASY5 Validation Report for Head TSL

Date: 20.01.2014

Test Laboratory: SPEAG, Zurich, Switzerland

DUT: Dipole 750 MHz; Type: D750V3; Serial: D750V3 - SN: 1003

Communication System: UID 0 - CW; Frequency: 750 MHz
Medium parameters used: f = 750 MHz; σ = 0.92 S/m; ε_r = 40.8; ρ = 1000 kg/m^3
Phantom section: Flat Section
Measurement Standard: DASY5 (IEEE/IEC/ANSI C63.19-2007)

DASY52 Configuration:

- Probe: ES3DV3 - SN3205; ConvF(6.37, 6.37, 6.37); Calibrated: 30.12.2013;
- Sensor-Surface: 3mm (Mechanical Surface Detection)
- Electronics: DAE4 Sn601; Calibrated: 25.04.2013
- Phantom: Flat Phantom 4.9L; Type: QD000P49AA; Serial: 1001
- DASY52 52.8.7(1137); SEMCAD X 14.6.10(7164)

Dipole Calibration for Head Tissue/Pin=250 mW, d=15mm/Zoom Scan (7x7x7)/Cube 0:

Measurement grid: dx=5mm, dy=5mm, dz=5mm
Reference Value = 53.711 V/m; Power Drift = 0.02 dB
Peak SAR (extrapolated) = 3.27 W/kg
SAR(1 g) = 2.16 W/kg; SAR(10 g) = 1.4 W/kg
Maximum value of SAR (measured) = 2.51 W/kg

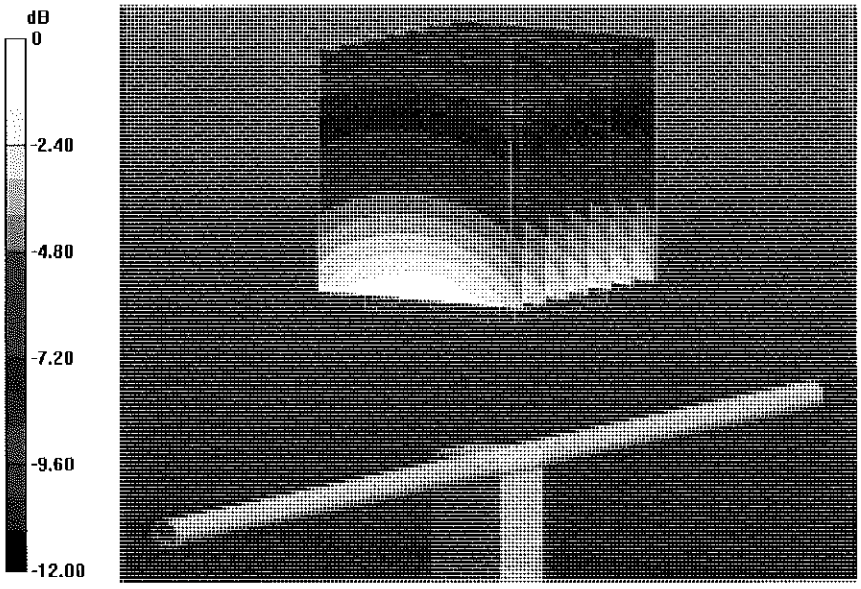

0 dB = 2.51 W/kg = 4.00 dBW/kg

Impedance Measurement Plot for Head TSL

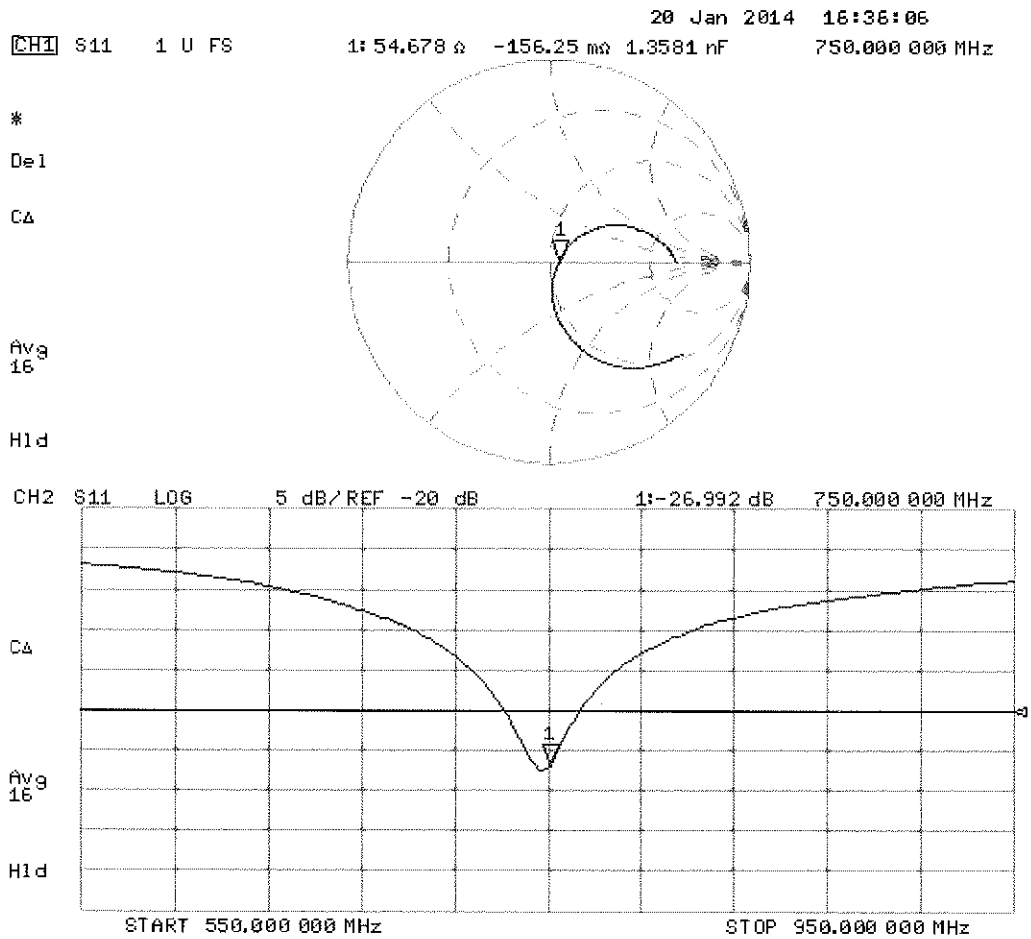

DASY5 Validation Report for Body TSL

Date: 20.01.2014

Test Laboratory: SPEAG, Zurich, Switzerland

DUT: Dipole 750 MHz; Type: D750V3; Serial: D750V3 - SN: 1003

Communication System: UID 0 - CW; Frequency: 750 MHz
Medium parameters used: f = 750 MHz; σ = 0.98 S/m; ε_r = 54; ρ = 1000 kg/m^3
Phantom section: Flat Section
Measurement Standard: DASY5 (IEEE/IEC/ANSI C63.19-2007)

DASY52 Configuration:

- Probe: ES3DV3 - SN3205; ConvF(6.13, 6.13, 6.13); Calibrated: 30.12.2013;
- Sensor-Surface: 3mm (Mechanical Surface Detection)
- Electronics: DAE4 Sn601; Calibrated: 25.04.2013
- Phantom: Flat Phantom 4.9L; Type: QD000P49AA; Serial: 1001
- DASY52 52.8.7(1137); SEMCAD X 14.6.10(7164)

Dipole Calibration for Body Tissue/Pin=250 mW, d=15mm/Zoom Scan (7x7x7)/Cube 0:

Measurement grid: dx=5mm, dy=5mm, dz=5mm
Reference Value = 53.082 V/m; Power Drift = 0.03 dB
Peak SAR (extrapolated) = 3.31 W/kg
SAR(1 g) = 2.24 W/kg; SAR(10 g) = 1.47 W/kg
Maximum value of SAR (measured) = 2.58 W/kg

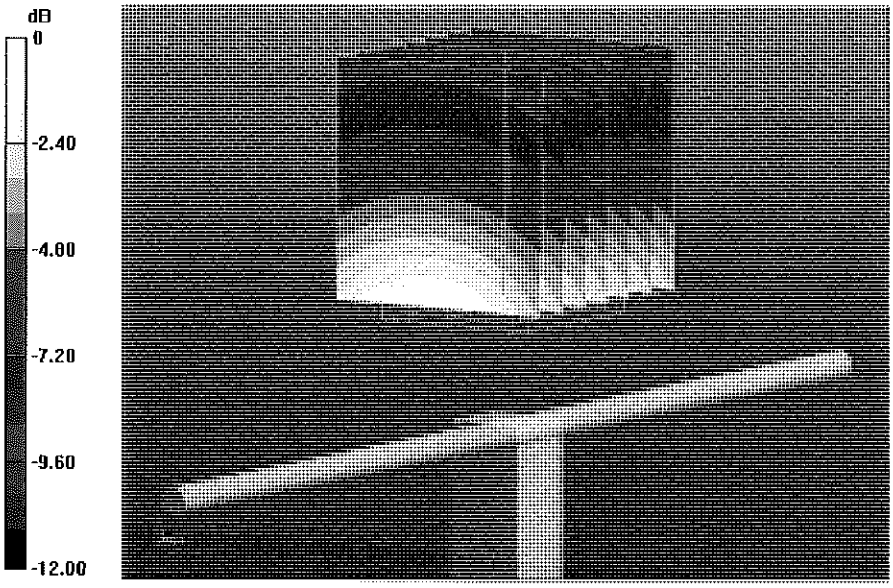

0 dB = 2.58 W/kg = 4.12 dBW/kg

Impedance Measurement Plot for Body TSL

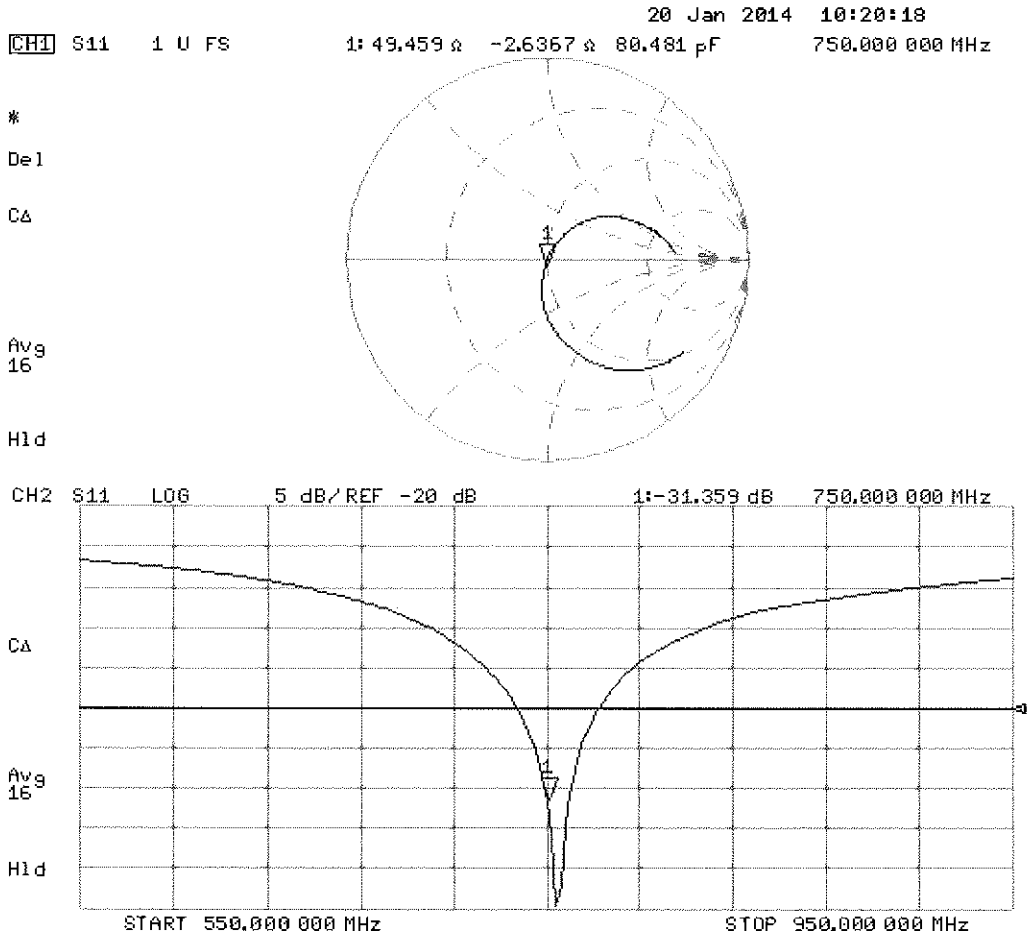

Calibration Laboratory of
Schmid & Partner
Engineering AG
Zeughausstrasse 43, 8004 Zurich, Switzerland

S Schweizerischer Kalibrierdienst
C Service suisse d'étalonnage
Servizio svizzero di taratura
S Swiss Calibration Service

Accredited by the Swiss Accreditation Service (SAS)
The Swiss Accreditation Service is one of the signatories to the EA Multilateral Agreement for the recognition of calibration certificates

Accreditation No.: SCS 108

Client **PC Test**

Certificate No: D835V2-4d119_Apr14

CALIBRATION CERTIFICATE

Object	D835V2 - SN: 4d119
Calibration procedure(s)	QA CAL-05.v9 Calibration procedure for dipole validation kits above 700 MHz
Calibration date:	April 07, 2014

CC✓ 4/25/14

This calibration certificate documents the traceability to national standards, which realize the physical units of measurements (SI).
The measurements and the uncertainties with confidence probability are given on the following pages and are part of the certificate.

All calibrations have been conducted in the closed laboratory facility: environment temperature (22 ± 3)°C and humidity < 70%.

Calibration Equipment used (M&TE critical for calibration)

Primary Standards	ID #	Cal Date (Certificate No.)	Scheduled Calibration
Power meter EPM-442A	GB37480704	09-Oct-13 (No. 217-01827)	Oct-14
Power sensor HP 8481A	US37292783	09-Oct-13 (No. 217-01827)	Oct-14
Power sensor HP 8481A	MY41092317	09-Oct-13 (No. 217-01828)	Oct-14
Reference 20 dB Attenuator	SN: 5058 (20k)	03-Apr-14 (No. 217-01918)	Apr-15
Type-N mismatch combination	SN: 5047.2 / 06327	03-Apr-14 (No. 217-01921)	Apr-15
Reference Probe ES3DV3	SN: 3205	30-Dec-13 (No. ES3-3205_Dec13)	Dec-14
DAE4	SN: 601	25-Apr-13 (No. DAE4-601_Apr13)	Apr-14

Secondary Standards	ID #	Check Date (in house)	Scheduled Check
RF generator R&S SMT-06	100005	04-Aug-99 (in house check Oct-13)	In house check: Oct-16
Network Analyzer HP 8753E	US37390585 S4206	18-Oct-01 (in house check Oct-13)	In house check: Oct-14

	Name	Function	Signature
Calibrated by:	Leif Klysner	Laboratory Technician	
Approved by:	Katja Pokovic	Technical Manager	

Issued: April 9, 2014

This calibration certificate shall not be reproduced except in full without written approval of the laboratory.

Glossary:

TSL	tissue simulating liquid
ConvF	sensitivity in TSL / NORM x,y,z
N/A	not applicable or not measured

Calibration is Performed According to the Following Standards:

a) IEEE Std 1528-2013, "IEEE Recommended Practice for Determining the Peak Spatial-Averaged Specific Absorption Rate (SAR) in the Human Head from Wireless Communications Devices: Measurement Techniques", June 2013
b) IEC 62209-1, "Procedure to measure the Specific Absorption Rate (SAR) for hand-held devices used in close proximity to the ear (frequency range of 300 MHz to 3 GHz)", February 2005
c) KDB 865664, "SAR Measurement Requirements for 100 MHz to 6 GHz"

Additional Documentation:

d) DASY4/5 System Handbook

Methods Applied and Interpretation of Parameters:

- *Measurement Conditions:* Further details are available from the Validation Report at the end of the certificate. All figures stated in the certificate are valid at the frequency indicated.
- *Antenna Parameters with TSL:* The dipole is mounted with the spacer to position its feed point exactly below the center marking of the flat phantom section, with the arms oriented parallel to the body axis.
- *Feed Point Impedance and Return Loss:* These parameters are measured with the dipole positioned under the liquid filled phantom. The impedance stated is transformed from the measurement at the SMA connector to the feed point. The Return Loss ensures low reflected power. No uncertainty required.
- *Electrical Delay:* One-way delay between the SMA connector and the antenna feed point. No uncertainty required.
- *SAR measured:* SAR measured at the stated antenna input power.
- *SAR normalized:* SAR as measured, normalized to an input power of 1 W at the antenna connector.
- *SAR for nominal TSL parameters:* The measured TSL parameters are used to calculate the nominal SAR result.

The reported uncertainty of measurement is stated as the standard uncertainty of measurement multiplied by the coverage factor k=2, which for a normal distribution corresponds to a coverage probability of approximately 95%.

Measurement Conditions

DASY system configuration, as far as not given on page 1.

DASY Version	DASY5	V52.8.7
Extrapolation	Advanced Extrapolation	
Phantom	Modular Flat Phantom	
Distance Dipole Center - TSL	15 mm	with Spacer
Zoom Scan Resolution	dx, dy, dz = 5 mm	
Frequency	835 MHz ± 1 MHz	

Head TSL parameters

The following parameters and calculations were applied.

	Temperature	**Permittivity**	**Conductivity**
Nominal Head TSL parameters	22.0 °C	41.5	0.90 mho/m
Measured Head TSL parameters	(22.0 ± 0.2) °C	41.6 ± 6 %	0.94 mho/m ± 6 %
Head TSL temperature change during test	< 0.5 °C	----	----

SAR result with Head TSL

SAR averaged over 1 cm^3 (1 g) of Head TSL	Condition	
SAR measured	250 mW input power	2.38 W/kg
SAR for nominal Head TSL parameters	normalized to 1W	**9.22 W/kg ± 17.0 % (k=2)**

SAR averaged over 10 cm^3 (10 g) of Head TSL	condition	
SAR measured	250 mW input power	1.53 W/kg
SAR for nominal Head TSL parameters	normalized to 1W	**5.97 W/kg ± 16.5 % (k=2)**

Body TSL parameters

The following parameters and calculations were applied.

	Temperature	**Permittivity**	**Conductivity**
Nominal Body TSL parameters	22.0 °C	55.2	0.97 mho/m
Measured Body TSL parameters	(22.0 ± 0.2) °C	53.6 ± 6 %	1.02 mho/m ± 6 %
Body TSL temperature change during test	< 0.5 °C	----	----

SAR result with Body TSL

SAR averaged over 1 cm^3 (1 g) of Body TSL	Condition	
SAR measured	250 mW input power	2.44 W/kg
SAR for nominal Body TSL parameters	normalized to 1W	**9.34 W/kg ± 17.0 % (k=2)**

SAR averaged over 10 cm^3 (10 g) of Body TSL	condition	
SAR measured	250 mW input power	1.59 W/kg
SAR for nominal Body TSL parameters	normalized to 1W	**6.15 W/kg ± 16.5 % (k=2)**

Appendix

Antenna Parameters with Head TSL

Impedance, transformed to feed point	51.2 Ω - 1.6 jΩ
Return Loss	- 34.0 dB

Antenna Parameters with Body TSL

Impedance, transformed to feed point	46.3 Ω - 4.5 jΩ
Return Loss	- 24.4 dB

General Antenna Parameters and Design

Electrical Delay (one direction)	1.386 ns

After long term use with 100W radiated power, only a slight warming of the dipole near the feedpoint can be measured.

The dipole is made of standard semirigid coaxial cable. The center conductor of the feeding line is directly connected to the second arm of the dipole. The antenna is therefore short-circuited for DC-signals. On some of the dipoles, small end caps are added to the dipole arms in order to improve matching when loaded according to the position as explained in the "Measurement Conditions" paragraph. The SAR data are not affected by this change. The overall dipole length is still according to the Standard.
No excessive force must be applied to the dipole arms, because they might bend or the soldered connections near the feedpoint may be damaged.

Additional EUT Data

Manufactured by	SPEAG
Manufactured on	June 29, 2010

DASY5 Validation Report for Head TSL

Date: 07.04.2014

Test Laboratory: SPEAG, Zurich, Switzerland

DUT: Dipole 835 MHz; Type: D835V2; Serial: D835V2 - SN: 4d119

Communication System: UID 0 - CW; Frequency: 835 MHz
Medium parameters used: f = 835 MHz; σ = 0.94 S/m; ε_r = 41.6; ρ = 1000 kg/m^3
Phantom section: Flat Section
Measurement Standard: DASY5 (IEEE/IEC/ANSI C63.19-2007)

DASY52 Configuration:

- Probe: ES3DV3 - SN3205; ConvF(6.22, 6.22, 6.22); Calibrated: 30.12.2013;
- Sensor-Surface: 3mm (Mechanical Surface Detection)
- Electronics: DAE4 Sn601; Calibrated: 25.04.2013
- Phantom: Flat Phantom 4.9L; Type: QD000P49AA; Serial: 1001
- DASY52 52.8.7(1137); SEMCAD X 14.6.10(7164)

Dipole Calibration for Head Tissue/Pin=250 mW, d=15mm/Zoom Scan (7x7x7)/Cube 0:

Measurement grid: dx=5mm, dy=5mm, dz=5mm
Reference Value = 56.289 V/m; Power Drift = 0.01 dB
Peak SAR (extrapolated) = 3.59 W/kg
SAR(1 g) = 2.38 W/kg; SAR(10 g) = 1.53 W/kg
Maximum value of SAR (measured) = 2.80 W/kg

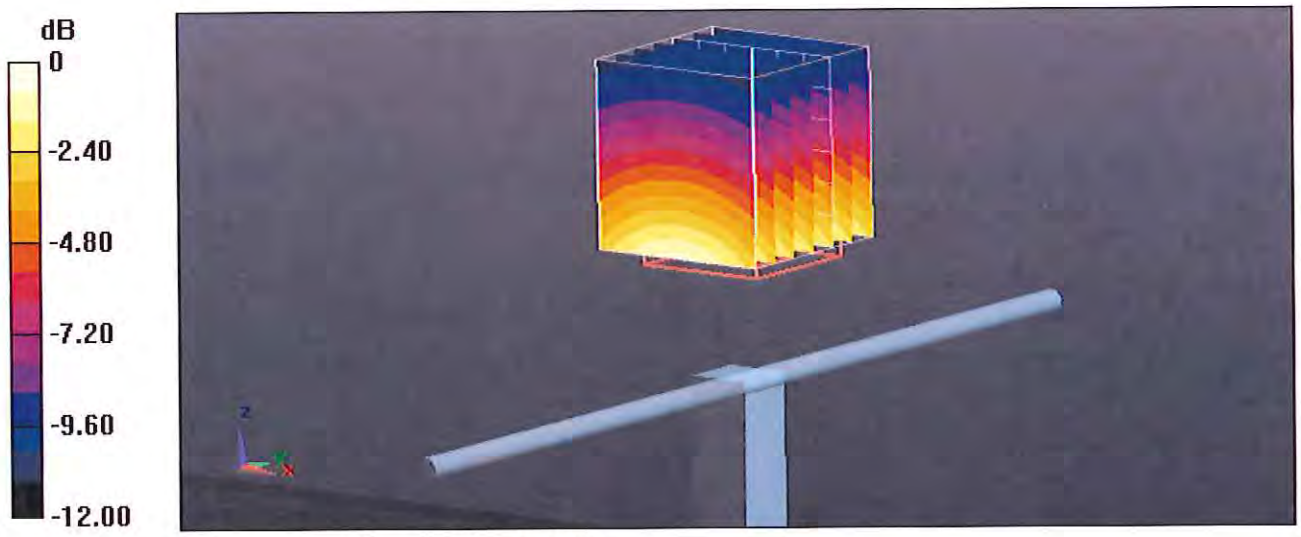

0 dB = 2.80 W/kg = 4.47 dBW/kg

Impedance Measurement Plot for Head TSL

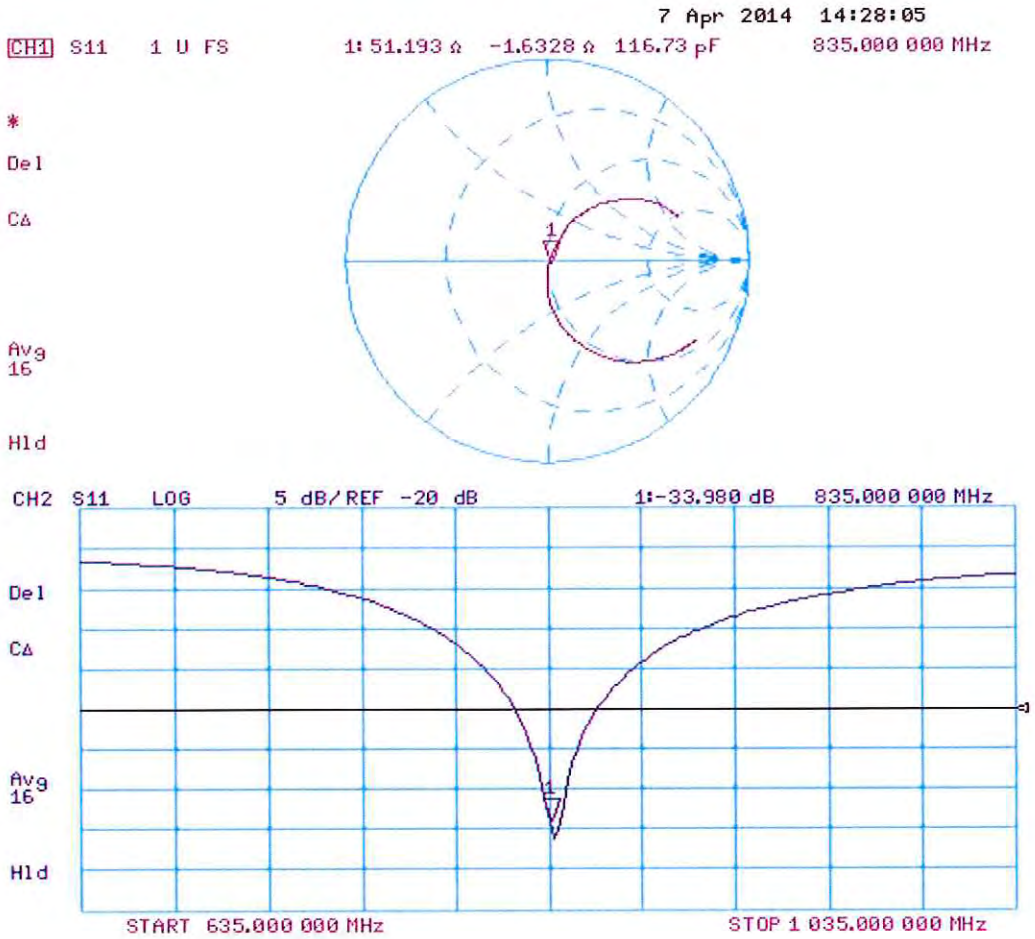

DASY5 Validation Report for Body TSL

Date: 07.04.2014

Test Laboratory: SPEAG, Zurich, Switzerland

DUT: Dipole 835 MHz; Type: D835V2; Serial: D835V2 - SN: 4d119

Communication System: UID 0 - CW; Frequency: 835 MHz
Medium parameters used: f = 835 MHz; σ = 1.02 S/m; ε_r = 53.6; ρ = 1000 kg/m^3
Phantom section: Flat Section
Measurement Standard: DASY5 (IEEE/IEC/ANSI C63.19-2007)

DASY52 Configuration:

- Probe: ES3DV3 - SN3205; ConvF(6.09, 6.09, 6.09); Calibrated: 30.12.2013;
- Sensor-Surface: 3mm (Mechanical Surface Detection)
- Electronics: DAE4 Sn601; Calibrated: 25.04.2013
- Phantom: Flat Phantom 4.9L; Type: QD000P49AA; Serial: 1001
- DASY52 52.8.7(1137); SEMCAD X 14.6.10(7164)

Dipole Calibration for Body Tissue/Pin=250 mW, d=15mm/Zoom Scan (7x7x7)/Cube 0:

Measurement grid: dx=5mm, dy=5mm, dz=5mm
Reference Value = 54.594 V/m; Power Drift = -0.01 dB
Peak SAR (extrapolated) = 3.61 W/kg
SAR(1 g) = 2.44 W/kg; SAR(10 g) = 1.59 W/kg
Maximum value of SAR (measured) = 2.85 W/kg

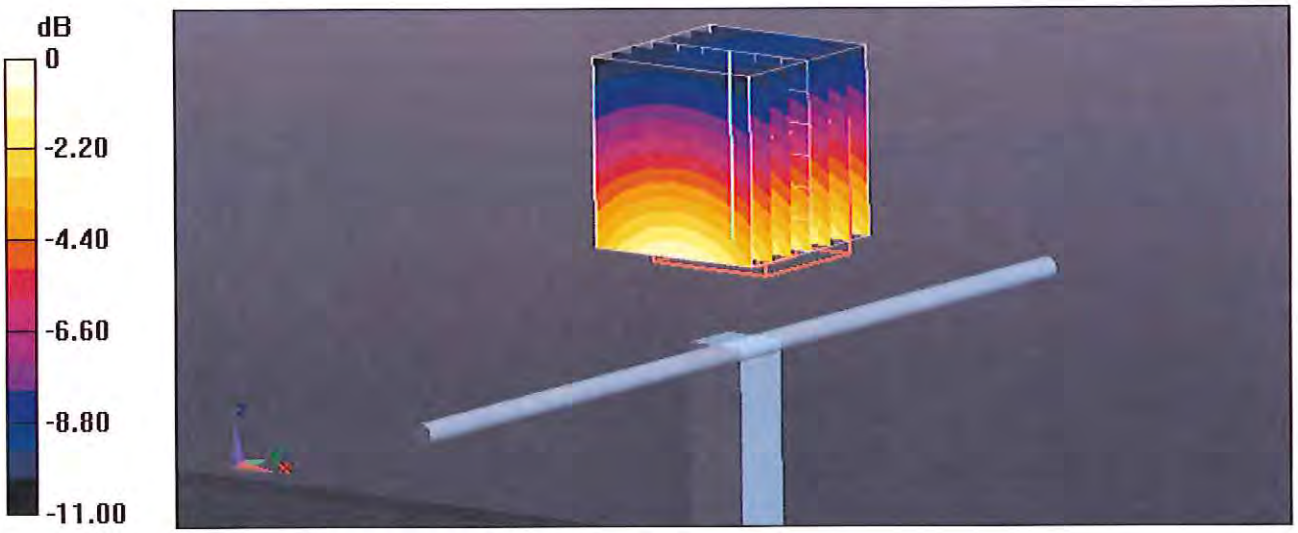

0 dB = 2.85 W/kg = 4.55 dBW/kg

Impedance Measurement Plot for Body TSL

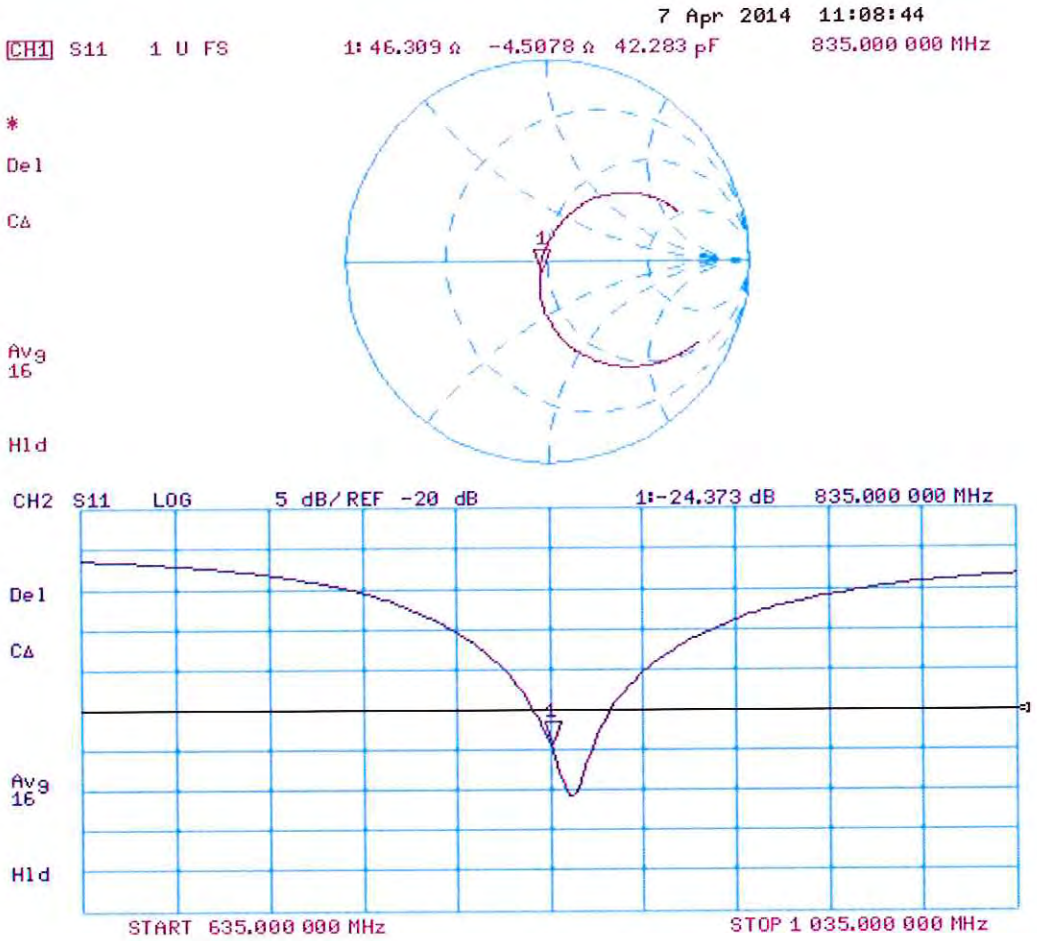

Calibration Laboratory of
Schmid & Partner
Engineering AG
Zeughausstrasse 43, 8004 Zurich, Switzerland

S Schweizerischer Kalibrierdienst
C Service suisse d'étalonnage
Servizio svizzero di taratura
S Swiss Calibration Service

Accredited by the Swiss Accreditation Service (SAS)
The Swiss Accreditation Service is one of the signatories to the EA Multilateral Agreement for the recognition of calibration certificates

Accreditation No.: SCS 108

Client **PC Test**

Certificate No: D1765V2-1008_May14

CALIBRATION CERTIFICATE

Object	D1765V2 - SN: 1008
Calibration procedure(s)	QA CAL-05.v9 Calibration procedure for dipole validation kits above 700 MHz
Calibration date:	May 07, 2014

CCV 6/2/14

This calibration certificate documents the traceability to national standards, which realize the physical units of measurements (SI).
The measurements and the uncertainties with confidence probability are given on the following pages and are part of the certificate.

All calibrations have been conducted in the closed laboratory facility: environment temperature (22 ± 3)°C and humidity < 70%.

Calibration Equipment used (M&TE critical for calibration)

Primary Standards	ID #	Cal Date (Certificate No.)	Scheduled Calibration
Power meter EPM-442A	GB37480704	09-Oct-13 (No. 217-01827)	Oct-14
Power sensor HP 8481A	US37292783	09-Oct-13 (No. 217-01827)	Oct-14
Power sensor HP 8481A	MY41092317	09-Oct-13 (No. 217-01828)	Oct-14
Reference 20 dB Attenuator	SN: 5058 (20k)	03-Apr-14 (No. 217-01918)	Apr-15
Type-N mismatch combination	SN: 5047.2 / 06327	03-Apr-14 (No. 217-01921)	Apr-15
Reference Probe ES3DV3	SN: 3205	30-Dec-13 (No. ES3-3205_Dec13)	Dec-14
DAE4	SN: 601	30-Apr-14 (No. DAE4-601_Apr14)	Apr-15

Secondary Standards	ID #	Check Date (in house)	Scheduled Check
RF generator R&S SMT-06	100005	04-Aug-99 (in house check Oct-13)	In house check: Oct-16
Network Analyzer HP 8753E	US37390585 S4206	18-Oct-01 (in house check Oct-13)	In house check: Oct-14

	Name	Function	Signature
Calibrated by:	Jeton Kastrati	Laboratory Technician	
Approved by:	Katja Pokovic	Technical Manager	

Issued: May 12, 2014

This calibration certificate shall not be reproduced except in full without written approval of the laboratory.

Glossary:

TSL	tissue simulating liquid
ConvF	sensitivity in TSL / NORM x,y,z
N/A	not applicable or not measured

Calibration is Performed According to the Following Standards:

a) IEEE Std 1528-2013, "IEEE Recommended Practice for Determining the Peak Spatial-Averaged Specific Absorption Rate (SAR) in the Human Head from Wireless Communications Devices: Measurement Techniques", June 2013
b) IEC 62209-1, "Procedure to measure the Specific Absorption Rate (SAR) for hand-held devices used in close proximity to the ear (frequency range of 300 MHz to 3 GHz)", February 2005
c) KDB 865664, "SAR Measurement Requirements for 100 MHz to 6 GHz"

Additional Documentation:

d) DASY4/5 System Handbook

Methods Applied and Interpretation of Parameters:

- *Measurement Conditions:* Further details are available from the Validation Report at the end of the certificate. All figures stated in the certificate are valid at the frequency indicated.
- *Antenna Parameters with TSL:* The dipole is mounted with the spacer to position its feed point exactly below the center marking of the flat phantom section, with the arms oriented parallel to the body axis.
- *Feed Point Impedance and Return Loss:* These parameters are measured with the dipole positioned under the liquid filled phantom. The impedance stated is transformed from the measurement at the SMA connector to the feed point. The Return Loss ensures low reflected power. No uncertainty required.
- *Electrical Delay:* One-way delay between the SMA connector and the antenna feed point. No uncertainty required.
- *SAR measured:* SAR measured at the stated antenna input power.
- *SAR normalized:* SAR as measured, normalized to an input power of 1 W at the antenna connector.
- *SAR for nominal TSL parameters:* The measured TSL parameters are used to calculate the nominal SAR result.

The reported uncertainty of measurement is stated as the standard uncertainty of measurement multiplied by the coverage factor k=2, which for a normal distribution corresponds to a coverage probability of approximately 95%.

Measurement Conditions

DASY system configuration, as far as not given on page 1.

DASY Version	DASY5	V52.8.8
Extrapolation	Advanced Extrapolation	
Phantom	Modular Flat Phantom	
Distance Dipole Center - TSL	10 mm	with Spacer
Zoom Scan Resolution	dx, dy, dz = 5 mm	
Frequency	1750 MHz ± 1 MHz	

Head TSL parameters

The following parameters and calculations were applied.

	Temperature	**Permittivity**	**Conductivity**
Nominal Head TSL parameters	22.0 °C	40.1	1.37 mho/m
Measured Head TSL parameters	(22.0 ± 0.2) °C	39.0 ± 6 %	1.36 mho/m ± 6 %
Head TSL temperature change during test	< 0.5 °C	----	----

SAR result with Head TSL

SAR averaged over 1 cm^3 (1 g) of Head TSL	Condition	
SAR measured	250 mW input power	9.23 W/kg
SAR for nominal Head TSL parameters	normalized to 1W	**36.9 W/kg ± 17.0 % (k=2)**

SAR averaged over 10 cm^3 (10 g) of Head TSL	condition	
SAR measured	250 mW input power	4.87 W/kg
SAR for nominal Head TSL parameters	normalized to 1W	**19.5 W/kg ± 16.5 % (k=2)**

Body TSL parameters

The following parameters and calculations were applied.

	Temperature	**Permittivity**	**Conductivity**
Nominal Body TSL parameters	22.0 °C	53.4	1.49 mho/m
Measured Body TSL parameters	(22.0 ± 0.2) °C	52.2 ± 6 %	1.48 mho/m ± 6 %
Body TSL temperature change during test	< 0.5 °C	----	----

SAR result with Body TSL

SAR averaged over 1 cm^3 (1 g) of Body TSL	Condition	
SAR measured	250 mW input power	9.41 W/kg
SAR for nominal Body TSL parameters	normalized to 1W	**37.6 W/kg ± 17.0 % (k=2)**

SAR averaged over 10 cm^3 (10 g) of Body TSL	condition	
SAR measured	250 mW input power	5.02 W/kg
SAR for nominal Body TSL parameters	normalized to 1W	**20.1 W/kg ± 16.5 % (k=2)**

Appendix

Antenna Parameters with Head TSL

Impedance, transformed to feed point	47.7 Ω - 6.1 jΩ
Return Loss	- 23.6 dB

Antenna Parameters with Body TSL

Impedance, transformed to feed point	43.7 Ω - 6.4 jΩ
Return Loss	- 20.4 dB

General Antenna Parameters and Design

Electrical Delay (one direction)	1.211 ns

After long term use with 100W radiated power, only a slight warming of the dipole near the feedpoint can be measured.

The dipole is made of standard semirigid coaxial cable. The center conductor of the feeding line is directly connected to the second arm of the dipole. The antenna is therefore short-circuited for DC-signals. On some of the dipoles, small end caps are added to the dipole arms in order to improve matching when loaded according to the position as explained in the "Measurement Conditions" paragraph. The SAR data are not affected by this change. The overall dipole length is still according to the Standard.
No excessive force must be applied to the dipole arms, because they might bend or the soldered connections near the feedpoint may be damaged.

Additional EUT Data

Manufactured by	SPEAG
Manufactured on	October 06, 2005

DASY5 Validation Report for Head TSL

Date: 07.05.2014

Test Laboratory: SPEAG, Zurich, Switzerland

DUT: Dipole 1765 MHz; Type: D1765V2; Serial: D1765V2 - SN: 1008

Communication System: UID 0 - CW; Frequency: 1750 MHz
Medium parameters used: f = 1750 MHz; σ = 1.36 S/m; ε_r = 39; ρ = 1000 kg/m^3
Phantom section: Flat Section
Measurement Standard: DASY5 (IEEE/IEC/ANSI C63.19-2007)

DASY52 Configuration:

- Probe: ES3DV3 - SN3205; ConvF(5.23, 5.23, 5.23); Calibrated: 30.12.2013;
- Sensor-Surface: 3mm (Mechanical Surface Detection)
- Electronics: DAE4 Sn601; Calibrated: 30.04.2014
- Phantom: Flat Phantom 5.0 (front); Type: QD000P50AA; Serial: 1001
- DASY52 52.8.8(1222); SEMCAD X 14.6.10(7331)

Dipole Calibration for Head Tissue/Pin=250 mW, d=10mm/Zoom Scan (7x7x7)/Cube 0:

Measurement grid: dx=5mm, dy=5mm, dz=5mm
Reference Value = 96.06 V/m; Power Drift = 0.01 dB
Peak SAR (extrapolated) = 16.7 W/kg
SAR(1 g) = 9.23 W/kg; SAR(10 g) = 4.87 W/kg
Maximum value of SAR (measured) = 11.7 W/kg

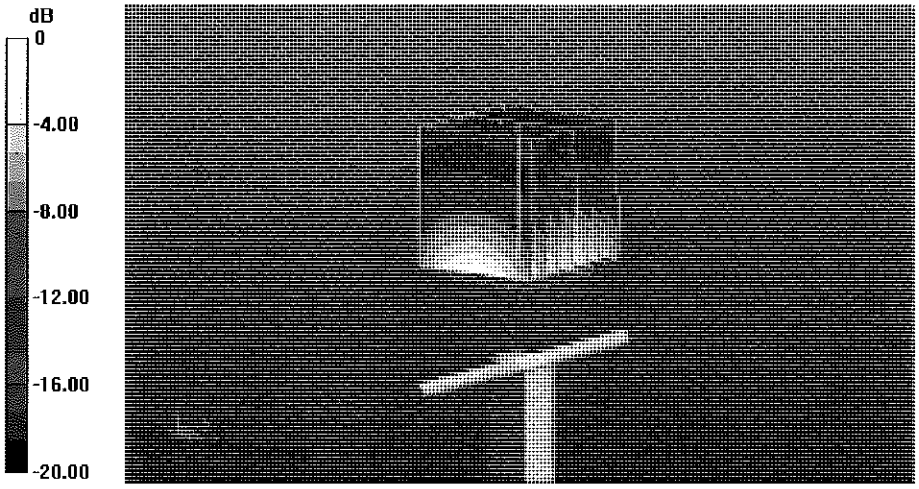

0 dB = 11.7 W/kg = 10.68 dBW/kg

Impedance Measurement Plot for Head TSL

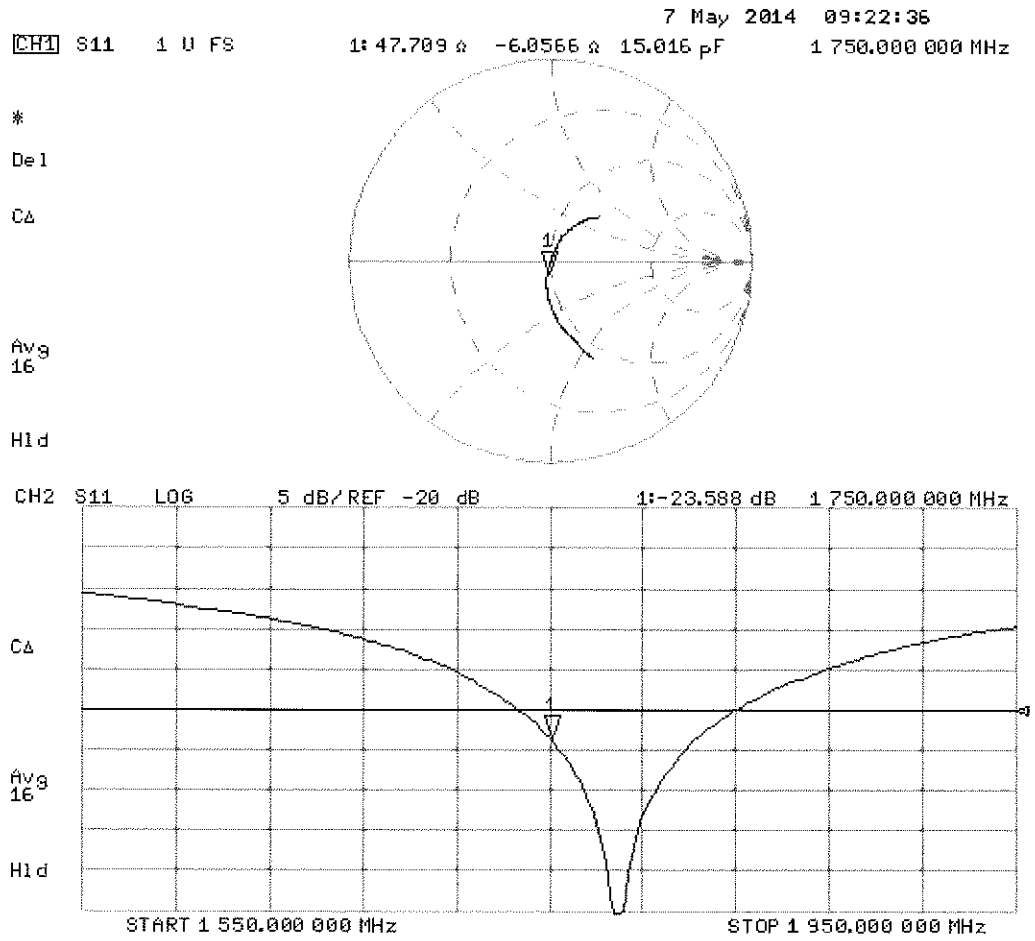

DASY5 Validation Report for Body TSL

Date: 07.05.2014

Test Laboratory: SPEAG, Zurich, Switzerland

DUT: Dipole 1765 MHz; Type: D1765V2; Serial: D1765V2 - SN: 1008

Communication System: UID 0 - CW; Frequency: 1750 MHz
Medium parameters used: f = 1750 MHz; σ = 1.48 S/m; ε_r = 52.2; ρ = 1000 kg/m^3
Phantom section: Flat Section
Measurement Standard: DASY5 (IEEE/IEC/ANSI C63.19-2007)

DASY52 Configuration:

- Probe: ES3DV3 - SN3205; ConvF(4.89, 4.89, 4.89); Calibrated: 30.12.2013;
- Sensor-Surface: 3mm (Mechanical Surface Detection)
- Electronics: DAE4 Sn601; Calibrated: 30.04.2014
- Phantom: Flat Phantom 5.0 (back); Type: QD000P50AA; Serial: 1002
- DASY52 52.8.8(1222); SEMCAD X 14.6.10(7331)

Dipole Calibration for Body Tissue/Pin=250 mW, d=10mm/Zoom Scan (7x7x7)/Cube 0:

Measurement grid: dx=5mm, dy=5mm, dz=5mm
Reference Value = 93.01 V/m; Power Drift = 0.00 dB
Peak SAR (extrapolated) = 16.3 W/kg
SAR(1 g) = 9.41 W/kg; SAR(10 g) = 5.02 W/kg
Maximum value of SAR (measured) = 11.8 W/kg

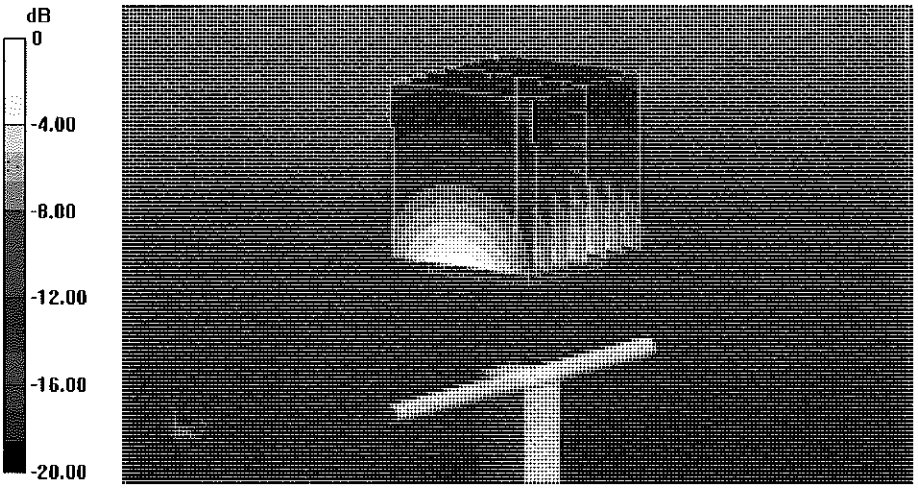

0 dB = 11.8 W/kg = 10.72 dBW/kg

Impedance Measurement Plot for Body TSL

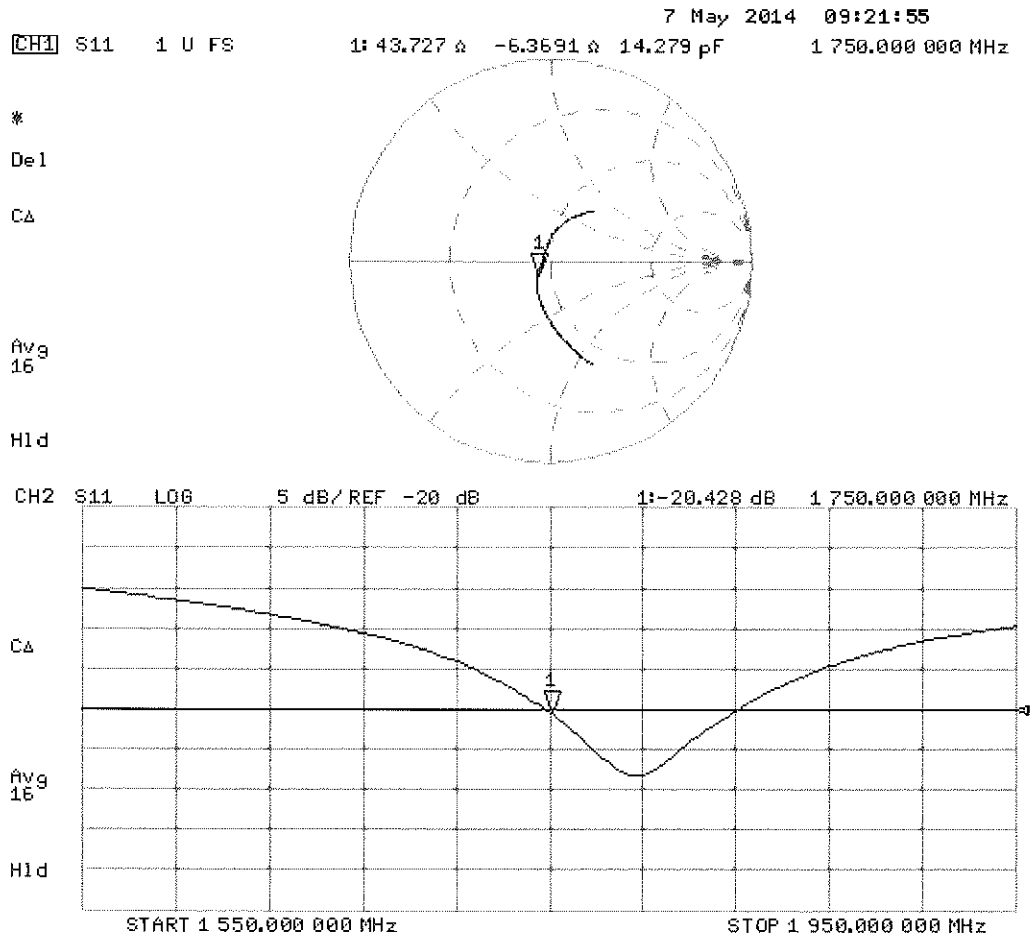

Calibration Laboratory of
Schmid & Partner
Engineering AG
Zeughausstrasse 43, 8004 Zurich, Switzerland

S Schweizerischer Kalibrierdienst
C Service suisse d'étalonnage
Servizio svizzero di taratura
S Swiss Calibration Service

Accredited by the Swiss Accreditation Service (SAS)
The Swiss Accreditation Service is one of the signatories to the EA Multilateral Agreement for the recognition of calibration certificates

Accreditation No.: SCS 108

Client **PC Test**

Certificate No: D1900V2-5d141_Apr14

CALIBRATION CERTIFICATE

Object	D1900V2 - SN: 5d141
Calibration procedure(s)	QA CAL-05.v9 Calibration procedure for dipole validation kits above 700 MHz
Calibration date:	April 09, 2014

✓ KOK 5/7/14

This calibration certificate documents the traceability to national standards, which realize the physical units of measurements (SI).
The measurements and the uncertainties with confidence probability are given on the following pages and are part of the certificate.

All calibrations have been conducted in the closed laboratory facility: environment temperature (22 ± 3)°C and humidity < 70%.

Calibration Equipment used (M&TE critical for calibration)

Primary Standards	ID #	Cal Date (Certificate No.)	Scheduled Calibration
Power meter EPM-442A	GB37480704	09-Oct-13 (No. 217-01827)	Oct-14
Power sensor HP 8481A	US37292783	09-Oct-13 (No. 217-01827)	Oct-14
Power sensor HP 8481A	MY41092317	09-Oct-13 (No. 217-01828)	Oct-14
Reference 20 dB Attenuator	SN: 5058 (20k)	03-Apr-14 (No. 217-01918)	Apr-15
Type-N mismatch combination	SN: 5047.2 / 06327	03-Apr-14 (No. 217-01921)	Apr-15
Reference Probe ES3DV3	SN: 3205	30-Dec-13 (No. ES3-3205_Dec13)	Dec-14
DAE4	SN: 601	25-Apr-13 (No. DAE4-601_Apr13)	Apr-14

Secondary Standards	ID #	Check Date (in house)	Scheduled Check
RF generator R&S SMT-06	100005	04-Aug-99 (in house check Oct-13)	In house check: Oct-16
Network Analyzer HP 8753E	US37390585 S4206	18-Oct-01 (in house check Oct-13)	In house check: Oct-14

	Name	Function	Signature
Calibrated by:	Claudio Leubler	Laboratory Technician	
Approved by:	Katja Pokovic	Technical Manager	

Issued: April 9, 2014

This calibration certificate shall not be reproduced except in full without written approval of the laboratory.

Glossary:

TSL	tissue simulating liquid
ConvF	sensitivity in TSL / NORM x,y,z
N/A	not applicable or not measured

Calibration is Performed According to the Following Standards:

a) IEEE Std 1528-2013, "IEEE Recommended Practice for Determining the Peak Spatial-Averaged Specific Absorption Rate (SAR) in the Human Head from Wireless Communications Devices: Measurement Techniques", June 2013
b) IEC 62209-1, "Procedure to measure the Specific Absorption Rate (SAR) for hand-held devices used in close proximity to the ear (frequency range of 300 MHz to 3 GHz)", February 2005
c) KDB 865664, "SAR Measurement Requirements for 100 MHz to 6 GHz"

Additional Documentation:

d) DASY4/5 System Handbook

Methods Applied and Interpretation of Parameters:

- *Measurement Conditions:* Further details are available from the Validation Report at the end of the certificate. All figures stated in the certificate are valid at the frequency indicated.
- *Antenna Parameters with TSL:* The dipole is mounted with the spacer to position its feed point exactly below the center marking of the flat phantom section, with the arms oriented parallel to the body axis.
- *Feed Point Impedance and Return Loss:* These parameters are measured with the dipole positioned under the liquid filled phantom. The impedance stated is transformed from the measurement at the SMA connector to the feed point. The Return Loss ensures low reflected power. No uncertainty required.
- *Electrical Delay:* One-way delay between the SMA connector and the antenna feed point. No uncertainty required.
- *SAR measured:* SAR measured at the stated antenna input power.
- *SAR normalized:* SAR as measured, normalized to an input power of 1 W at the antenna connector.
- *SAR for nominal TSL parameters:* The measured TSL parameters are used to calculate the nominal SAR result.

The reported uncertainty of measurement is stated as the standard uncertainty of measurement multiplied by the coverage factor k=2, which for a normal distribution corresponds to a coverage probability of approximately 95%.

Measurement Conditions

DASY system configuration, as far as not given on page 1.

DASY Version	DASY5	V52.8.7
Extrapolation	Advanced Extrapolation	
Phantom	Modular Flat Phantom	
Distance Dipole Center - TSL	10 mm	with Spacer
Zoom Scan Resolution	dx, dy, dz = 5 mm	
Frequency	1900 MHz ± 1 MHz	

Head TSL parameters

The following parameters and calculations were applied.

	Temperature	**Permittivity**	**Conductivity**
Nominal Head TSL parameters	22.0 °C	40.0	1.40 mho/m
Measured Head TSL parameters	(22.0 ± 0.2) °C	39.1 ± 6 %	1.36 mho/m ± 6 %
Head TSL temperature change during test	< 0.5 °C	----	----

SAR result with Head TSL

SAR averaged over 1 cm^3 (1 g) of Head TSL	Condition	
SAR measured	250 mW input power	9.91 W/kg
SAR for nominal Head TSL parameters	normalized to 1W	**40.1 W/kg ± 17.0 % (k=2)**

SAR averaged over 10 cm^3 (10 g) of Head TSL	condition	
SAR measured	250 mW input power	5.17 W/kg
SAR for nominal Head TSL parameters	normalized to 1W	**20.8 W/kg ± 16.5 % (k=2)**

Body TSL parameters

The following parameters and calculations were applied.

	Temperature	**Permittivity**	**Conductivity**
Nominal Body TSL parameters	22.0 °C	53.3	1.52 mho/m
Measured Body TSL parameters	(22.0 ± 0.2) °C	52.4 ± 6 %	1.52 mho/m ± 6 %
Body TSL temperature change during test	< 0.5 °C	----	----

SAR result with Body TSL

SAR averaged over 1 cm^3 (1 g) of Body TSL	Condition	
SAR measured	250 mW input power	10.2 W/kg
SAR for nominal Body TSL parameters	normalized to 1W	**40.6 W/kg ± 17.0 % (k=2)**

SAR averaged over 10 cm^3 (10 g) of Body TSL	condition	
SAR measured	250 mW input power	5.41 W/kg
SAR for nominal Body TSL parameters	normalized to 1W	**21.6 W/kg ± 16.5 % (k=2)**

Appendix

Antenna Parameters with Head TSL

Impedance, transformed to feed point	52.8 Ω + 5.5 jΩ
Return Loss	- 24.5 dB

Antenna Parameters with Body TSL

Impedance, transformed to feed point	48.8 Ω + 6.3 jΩ
Return Loss	- 23.7 dB

General Antenna Parameters and Design

Electrical Delay (one direction)	1.199 ns

After long term use with 100W radiated power, only a slight warming of the dipole near the feedpoint can be measured.

The dipole is made of standard semirigid coaxial cable. The center conductor of the feeding line is directly connected to the second arm of the dipole. The antenna is therefore short-circuited for DC-signals. On some of the dipoles, small end caps are added to the dipole arms in order to improve matching when loaded according to the position as explained in the "Measurement Conditions" paragraph. The SAR data are not affected by this change. The overall dipole length is still according to the Standard.
No excessive force must be applied to the dipole arms, because they might bend or the soldered connections near the feedpoint may be damaged.

Additional EUT Data

Manufactured by	SPEAG
Manufactured on	March 11, 2011

DASY5 Validation Report for Head TSL

Date: 09.04.2014

Test Laboratory: SPEAG, Zurich, Switzerland

DUT: Dipole 1900 MHz; Type: D1900V2; Serial: D1900V2 - SN: 5d141

Communication System: UID 0 - CW; Frequency: 1900 MHz
Medium parameters used: f = 1900 MHz; σ = 1.36 S/m; ε_r = 39.1; ρ = 1000 kg/m^3
Phantom section: Flat Section
Measurement Standard: DASY5 (IEEE/IEC/ANSI C63.19-2007)

DASY52 Configuration:

- Probe: ES3DV3 - SN3205; ConvF(5.06, 5.06, 5.06); Calibrated: 30.12.2013;
- Sensor-Surface: 3mm (Mechanical Surface Detection)
- Electronics: DAE4 Sn601; Calibrated: 25.04.2013
- Phantom: Flat Phantom 5.0 (front); Type: QD000P50AA; Serial: 1001
- DASY52 52.8.7(1137); SEMCAD X 14.6.10(7164)

Dipole Calibration for Head Tissue/Pin=250 mW, d=10mm/Zoom Scan (7x7x7)/Cube 0:

Measurement grid: dx=5mm, dy=5mm, dz=5mm
Reference Value = 99.080 V/m; Power Drift = 0.01 dB
Peak SAR (extrapolated) = 18.2 W/kg
SAR(1 g) = 9.91 W/kg; SAR(10 g) = 5.17 W/kg
Maximum value of SAR (measured) = 12.5 W/kg

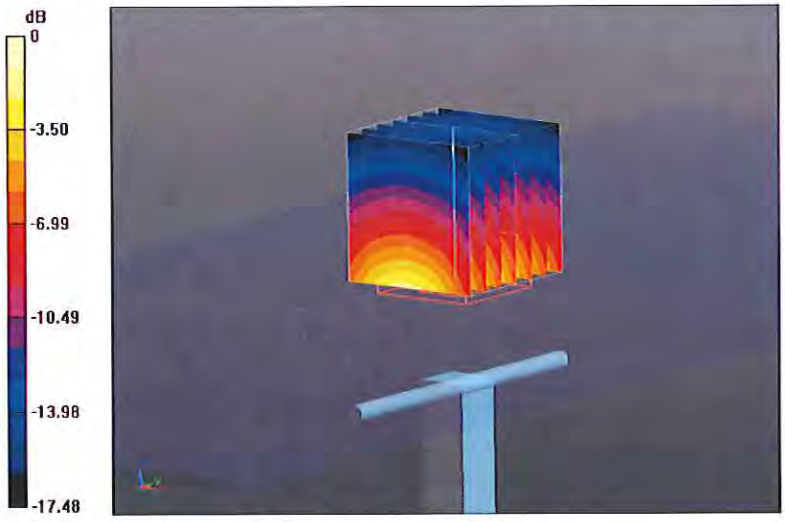

0 dB = 12.5 W/kg = 10.97 dBW/kg

Impedance Measurement Plot for Head TSL

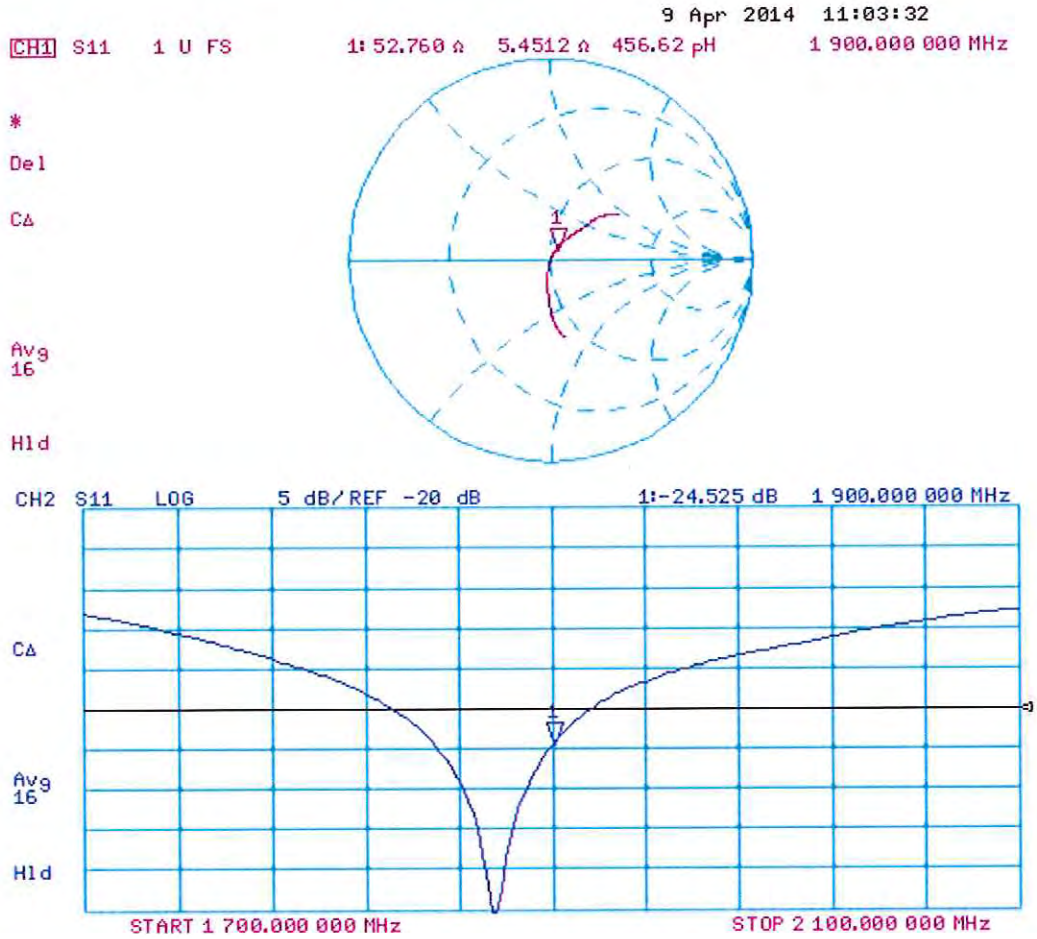

DASY5 Validation Report for Body TSL

Date: 09.04.2014

Test Laboratory: SPEAG, Zurich, Switzerland

DUT: Dipole 1900 MHz; Type: D1900V2; Serial: D1900V2 - SN: 5d141

Communication System: UID 0 - CW; Frequency: 1900 MHz
Medium parameters used: f = 1900 MHz; σ = 1.52 S/m; ε_r = 52.4; ρ = 1000 kg/m^3
Phantom section: Flat Section
Measurement Standard: DASY5 (IEEE/IEC/ANSI C63.19-2007)

DASY52 Configuration:

- Probe: ES3DV3 - SN3205; ConvF(4.76, 4.76, 4.76); Calibrated: 30.12.2013;
- Sensor-Surface: 3mm (Mechanical Surface Detection)
- Electronics: DAE4 Sn601; Calibrated: 25.04.2013
- Phantom: Flat Phantom 5.0 (back); Type: QD000P50AA; Serial: 1002
- DASY52 52.8.7(1137); SEMCAD X 14.6.10(7164)

Dipole Calibration for Body Tissue/Pin=250 mW, d=10mm/Zoom Scan (7x7x7)/Cube 0:

Measurement grid: dx=5mm, dy=5mm, dz=5mm
Reference Value = 95.820 V/m; Power Drift = -0.01 dB
Peak SAR (extrapolated) = 17.9 W/kg
SAR(1 g) = 10.2 W/kg; SAR(10 g) = 5.41 W/kg
Maximum value of SAR (measured) = 12.9 W/kg

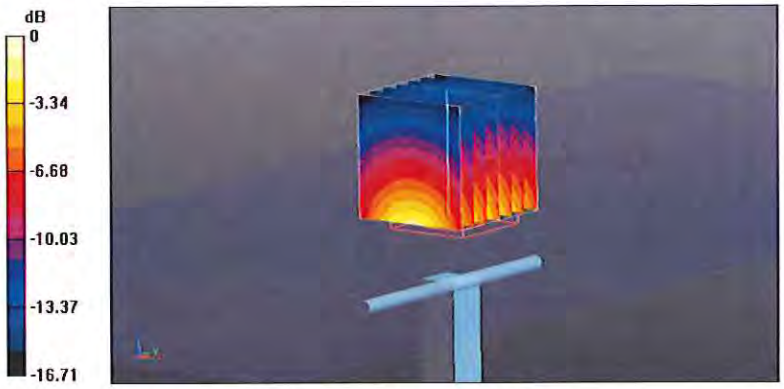

0 dB = 12.9 W/kg = 11.11 dBW/kg

Impedance Measurement Plot for Body TSL

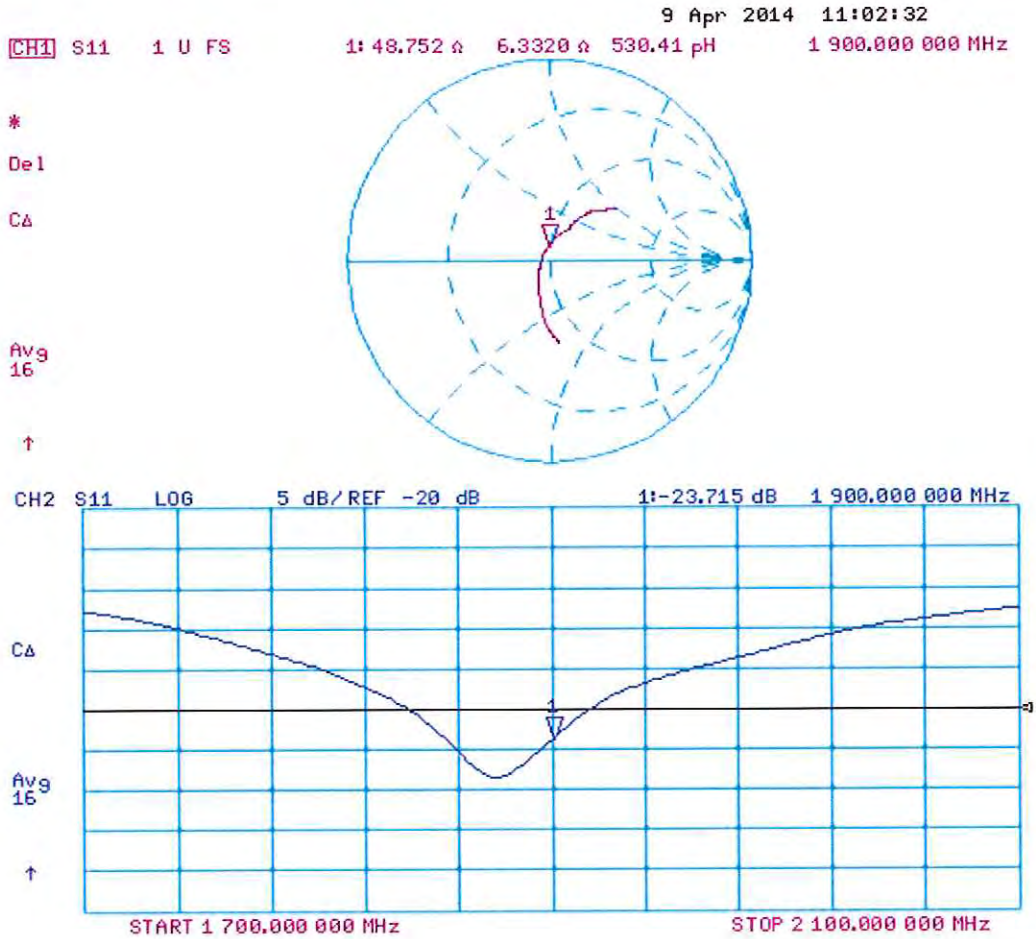

Calibration Laboratory of
Schmid & Partner
Engineering AG
Zeughausstrasse 43, 8004 Zurich, Switzerland

S Schweizerischer Kalibrierdienst
C Service suisse d'étalonnage
Servizio svizzero di taratura
S Swiss Calibration Service

Accredited by the Swiss Accreditation Service (SAS)
The Swiss Accreditation Service is one of the signatories to the EA Multilateral Agreement for the recognition of calibration certificates

Accreditation No.: SCS 108

Client **PC Test**

Certificate No: D2450V2-797_Jan14

CALIBRATION CERTIFICATE

Object	D2450V2 - SN: 797
Calibration procedure(s)	QA CAL-05.v9 Calibration procedure for dipole validation kits above 700 MHz
Calibration date:	January 21, 2014

CC ✓
2/5/14

This calibration certificate documents the traceability to national standards, which realize the physical units of measurements (SI).
The measurements and the uncertainties with confidence probability are given on the following pages and are part of the certificate.

All calibrations have been conducted in the closed laboratory facility: environment temperature (22 ± 3)°C and humidity < 70%.

Calibration Equipment used (M&TE critical for calibration)

Primary Standards	ID #	Cal Date (Certificate No.)	Scheduled Calibration
Power meter EPM-442A	GB37480704	09-Oct-13 (No. 217-01827)	Oct-14
Power sensor HP 8481A	US37292783	09-Oct-13 (No. 217-01827)	Oct-14
Power sensor HP 8481A	MY41092317	09-Oct-13 (No. 217-01828)	Oct-14
Reference 20 dB Attenuator	SN: 5058 (20k)	04-Apr-13 (No. 217-01736)	Apr-14
Type-N mismatch combination	SN: 5047.3 / 06327	04-Apr-13 (No. 217-01739)	Apr-14
Reference Probe ES3DV3	SN: 3205	30-Dec-13 (No. ES3-3205_Dec13)	Dec-14
DAE4	SN: 601	25-Apr-13 (No. DAE4-601_Apr13)	Apr-14

Secondary Standards	ID #	Check Date (in house)	Scheduled Check
RF generator R&S SMT-06	100005	04-Aug-99 (in house check Oct-13)	In house check: Oct-16
Network Analyzer HP 8753E	US37390585 S4206	18-Oct-01 (in house check Oct-13)	In house check: Oct-14

	Name	Function	Signature
Calibrated by:	Israe El-Naouq	Laboratory Technician	Israe El-Naouq
Approved by:	Katja Pokovic	Technical Manager	

Issued: January 21, 2014

This calibration certificate shall not be reproduced except in full without written approval of the laboratory.

PCT# 751

Glossary:

TSL	tissue simulating liquid
ConvF	sensitivity in TSL / NORM x,y,z
N/A	not applicable or not measured

Calibration is Performed According to the Following Standards:

a) IEEE Std 1528-2013, "IEEE Recommended Practice for Determining the Peak Spatial-Averaged Specific Absorption Rate (SAR) in the Human Head from Wireless Communications Devices: Measurement Techniques", June 2013
b) IEC 62209-1, "Procedure to measure the Specific Absorption Rate (SAR) for hand-held devices used in close proximity to the ear (frequency range of 300 MHz to 3 GHz)", February 2005
c) KDB 865664, "SAR Measurement Requirements for 100 MHz to 6 GHz"

Additional Documentation:

d) DASY4/5 System Handbook

Methods Applied and Interpretation of Parameters:

- *Measurement Conditions:* Further details are available from the Validation Report at the end of the certificate. All figures stated in the certificate are valid at the frequency indicated.
- *Antenna Parameters with TSL:* The dipole is mounted with the spacer to position its feed point exactly below the center marking of the flat phantom section, with the arms oriented parallel to the body axis.
- *Feed Point Impedance and Return Loss:* These parameters are measured with the dipole positioned under the liquid filled phantom. The impedance stated is transformed from the measurement at the SMA connector to the feed point. The Return Loss ensures low reflected power. No uncertainty required.
- *Electrical Delay:* One-way delay between the SMA connector and the antenna feed point. No uncertainty required.
- *SAR measured:* SAR measured at the stated antenna input power.
- *SAR normalized:* SAR as measured, normalized to an input power of 1 W at the antenna connector.
- *SAR for nominal TSL parameters:* The measured TSL parameters are used to calculate the nominal SAR result.

The reported uncertainty of measurement is stated as the standard uncertainty of measurement multiplied by the coverage factor k=2, which for a normal distribution corresponds to a coverage probability of approximately 95%.

Measurement Conditions

DASY system configuration, as far as not given on page 1.

DASY Version	DASY5	V52.8.7
Extrapolation	Advanced Extrapolation	
Phantom	Modular Flat Phantom	
Distance Dipole Center - TSL	10 mm	with Spacer
Zoom Scan Resolution	dx, dy, dz = 5 mm	
Frequency	2450 MHz ± 1 MHz	

Head TSL parameters

The following parameters and calculations were applied.

	Temperature	**Permittivity**	**Conductivity**
Nominal Head TSL parameters	22.0 °C	39.2	1.80 mho/m
Measured Head TSL parameters	(22.0 ± 0.2) °C	38.7 ± 6 %	1.86 mho/m ± 6 %
Head TSL temperature change during test	< 0.5 °C	----	----

SAR result with Head TSL

SAR averaged over 1 cm^3 (1 g) of Head TSL	Condition	
SAR measured	250 mW input power	13.2 W/kg
SAR for nominal Head TSL parameters	normalized to 1W	**51.8 W/kg ± 17.0 % (k=2)**

SAR averaged over 10 cm^3 (10 g) of Head TSL	condition	
SAR measured	250 mW input power	6.13 W/kg
SAR for nominal Head TSL parameters	normalized to 1W	**24.3 W/kg ± 16.5 % (k=2)**

Body TSL parameters

The following parameters and calculations were applied.

	Temperature	**Permittivity**	**Conductivity**
Nominal Body TSL parameters	22.0 °C	52.7	1.95 mho/m
Measured Body TSL parameters	(22.0 ± 0.2) °C	51.3 ± 6 %	2.04 mho/m ± 6 %
Body TSL temperature change during test	< 0.5 °C	----	----

SAR result with Body TSL

SAR averaged over 1 cm^3 (1 g) of Body TSL	Condition	
SAR measured	250 mW input power	12.7 W/kg
SAR for nominal Body TSL parameters	normalized to 1W	**49.4 W/kg ± 17.0 % (k=2)**

SAR averaged over 10 cm^3 (10 g) of Body TSL	condition	
SAR measured	250 mW input power	5.86 W/kg
SAR for nominal Body TSL parameters	normalized to 1W	**23.1 W/kg ± 16.5 % (k=2)**

Appendix

Antenna Parameters with Head TSL

Impedance, transformed to feed point	53.5 Ω + 3.2 jΩ
Return Loss	- 26.7 dB

Antenna Parameters with Body TSL

Impedance, transformed to feed point	50.0 Ω + 4.9 jΩ
Return Loss	- 26.2 dB

General Antenna Parameters and Design

Electrical Delay (one direction)	1.151 ns

After long term use with 100W radiated power, only a slight warming of the dipole near the feedpoint can be measured.

The dipole is made of standard semirigid coaxial cable. The center conductor of the feeding line is directly connected to the second arm of the dipole. The antenna is therefore short-circuited for DC-signals. On some of the dipoles, small end caps are added to the dipole arms in order to improve matching when loaded according to the position as explained in the "Measurement Conditions" paragraph. The SAR data are not affected by this change. The overall dipole length is still according to the Standard.
No excessive force must be applied to the dipole arms, because they might bend or the soldered connections near the feedpoint may be damaged.

Additional EUT Data

Manufactured by	SPEAG
Manufactured on	January 24, 2006

DASY5 Validation Report for Head TSL

Date: 21.01.2014

Test Laboratory: SPEAG, Zurich, Switzerland

DUT: Dipole 2450 MHz; Type: D2450V2; Serial: D2450V2 - SN: 797

Communication System: UID 0 - CW; Frequency: 2450 MHz
Medium parameters used: f = 2450 MHz; σ = 1.86 S/m; ε_r = 38.7; ρ = 1000 kg/m^3
Phantom section: Flat Section
Measurement Standard: DASY5 (IEEE/IEC/ANSI C63.19-2007)

DASY52 Configuration:

- Probe: ES3DV3 - SN3205; ConvF(4.53, 4.53, 4.53); Calibrated: 30.12.2013;
- Sensor-Surface: 3mm (Mechanical Surface Detection)
- Electronics: DAE4 Sn601; Calibrated: 25.04.2013
- Phantom: Flat Phantom 5.0 (front); Type: QD000P50AA; Serial: 1001
- DASY52 52.8.7(1137); SEMCAD X 14.6.10(7164)

Dipole Calibration for Head Tissue/Pin=250 mW, d=10mm/Zoom Scan (7x7x7)/Cube 0:

Measurement grid: dx=5mm, dy=5mm, dz=5mm
Reference Value = 99.151 V/m; Power Drift = 0.05 dB
Peak SAR (extrapolated) = 27.5 W/kg
SAR(1 g) = 13.2 W/kg; SAR(10 g) = 6.13 W/kg
Maximum value of SAR (measured) = 16.9 W/kg

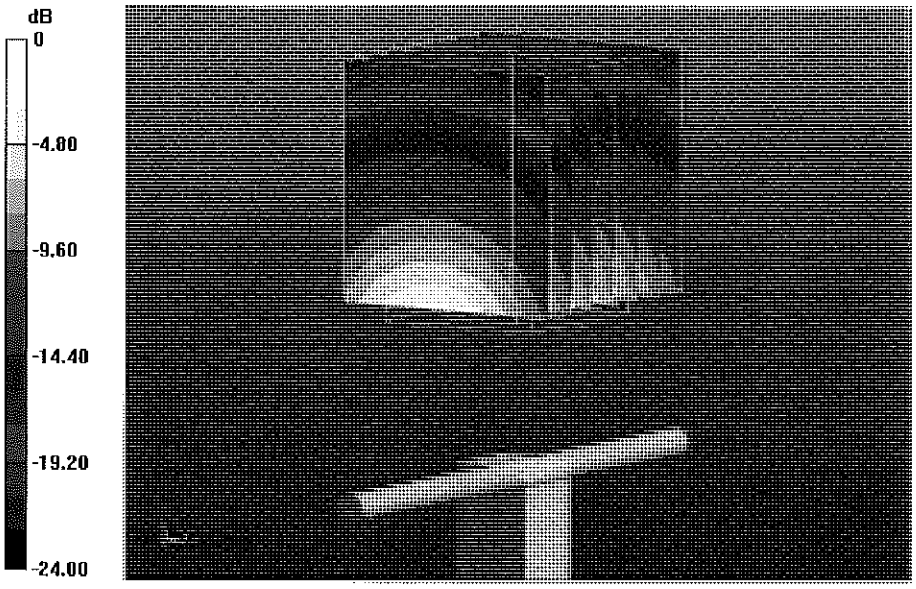

0 dB = 16.9 W/kg = 12.28 dBW/kg

Impedance Measurement Plot for Head TSL

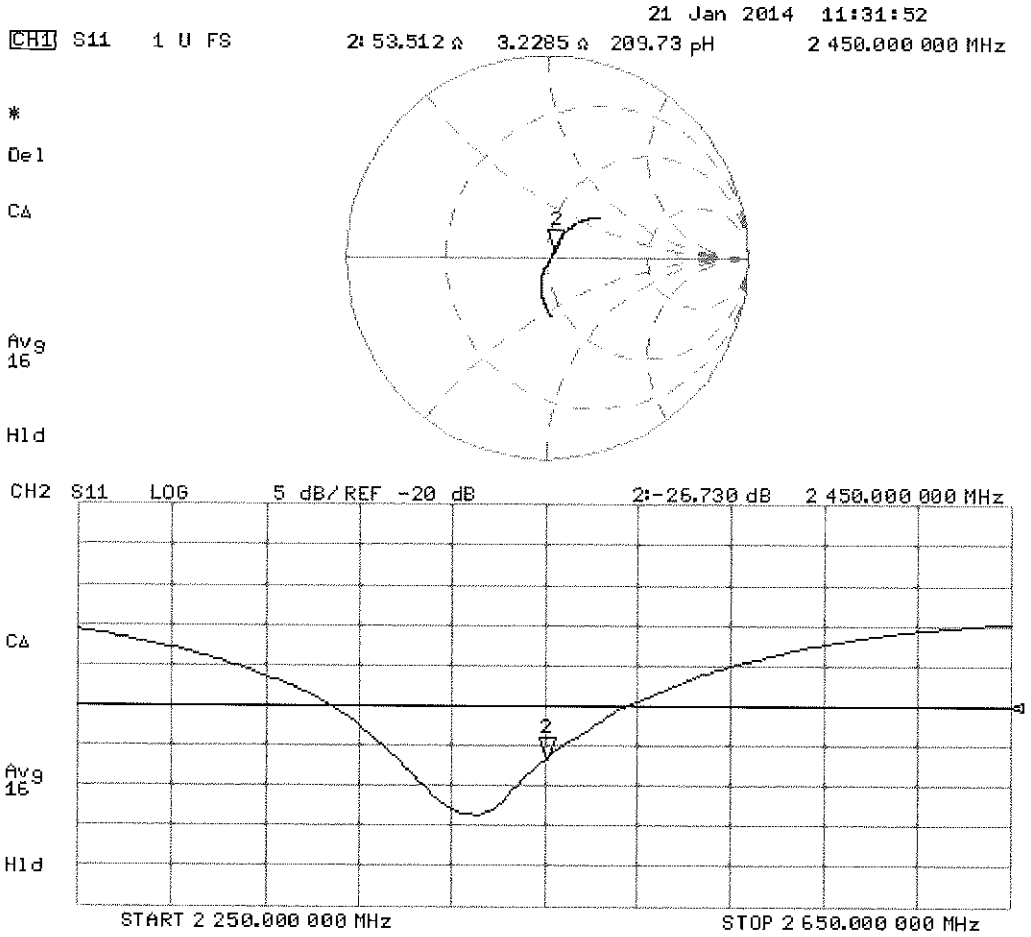

DASY5 Validation Report for Body TSL

Date: 21.01.2014

Test Laboratory: SPEAG, Zurich, Switzerland

DUT: Dipole 2450 MHz; Type: D2450V2; Serial: D2450V2 - SN: 797

Communication System: UID 0 - CW; Frequency: 2450 MHz
Medium parameters used: f = 2450 MHz; σ = 2.04 S/m; ε_r = 51.3; ρ = 1000 kg/m^3
Phantom section: Flat Section
Measurement Standard: DASY5 (IEEE/IEC/ANSI C63.19-2007)

DASY52 Configuration:

- Probe: ES3DV3 - SN3205; ConvF(4.35, 4.35, 4.35); Calibrated: 30.12.2013;
- Sensor-Surface: 3mm (Mechanical Surface Detection)
- Electronics: DAE4 Sn601; Calibrated: 25.04.2013
- Phantom: Flat Phantom 5.0 (back); Type: QD000P50AA; Serial: 1002
- DASY52 52.8.7(1137); SEMCAD X 14.6.10(7164)

Dipole Calibration for Body Tissue/Pin=250 mW, d=10mm/Zoom Scan (7x7x7)/Cube 0:

Measurement grid: dx=5mm, dy=5mm, dz=5mm
Reference Value = 93.709 V/m; Power Drift = 0.01 dB
Peak SAR (extrapolated) = 26.4 W/kg
SAR(1 g) = 12.7 W/kg; SAR(10 g) = 5.86 W/kg
Maximum value of SAR (measured) = 16.8 W/kg

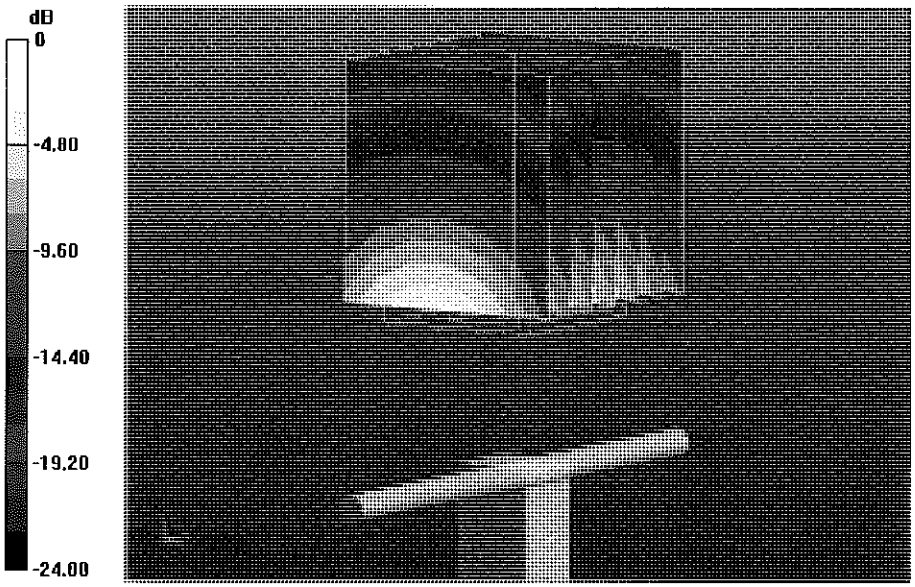

0 dB = 16.8 W/kg = 12.25 dBW/kg
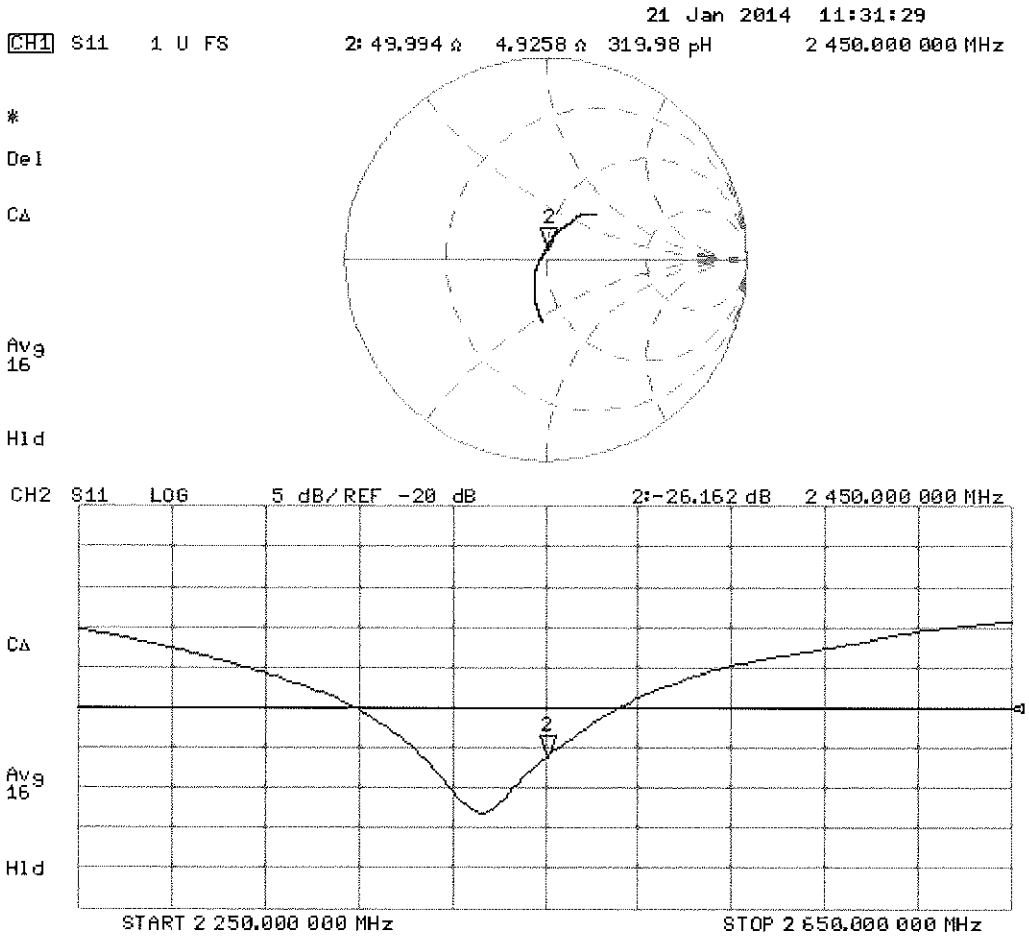
Impedance Measurement Plot for Body TSL