APPENDIX F: DOWNLINK LTE CA RF CONDUCTED POWERS

1.1 LTE Downlink Only Carrier Aggregation Test Reduction Methodology

SAR test exclusion for LTE downlink Carrier Aggregation is determined by power measurements according to the number of component carriers (CCs) supported by the product implementation. Per April 2018 TCBC Workshop Notes, the following test reduction methodology was applied to determine the combinations required for conducted power measurements.

LTE DLCA Test Reduction Methodology:

- The supported combinations were arranged by the number of component carriers in columns.
- Any limitations on the PCC or SCC for each combination were identified alongside the combination (e.g. CA_2A-2A-4A-12A, but B12 can only be configured as a SCC).
- Power measurements were performed for "supersets" (LTE CA combinations with multiple components carriers) and any "subsets" (LTE CA combinations with fewer component carriers) that were not completely covered by the supersets.
- Only subsets that have the exact same components as a superset were excluded for measurement.
- When there were certain restrictions on component carriers that existed in the superset that were not applied for the subset, the subset configuration was additionally evaluated.
- Both inter-band and intra-band downlink carrier aggregation scenarios were considered.
- Downlink CA combinations for SISO and 4x4 Downlink MIMO operations were measured independently, per May 2017 TCBC Workshop notes.

Table 1 – Example of Exclusion Table for SISO Configurations

Index	2CC	Supported Channel Bandwidth [MHz]		Restriction	Completely Covered by Measurement Superset
		CC1	CC2		
2CC #1	CA_2C	5, 10, 15, 20	5, 10, 15, 20		3CC #4
2CC #2	CA_2A-5A	5, 10, 15, 20	5, 10		3CC #1
2CC #3	CA_2A-12A	5, 10, 15, 20	5, 10		3CC #3
2CC #4	CA_2A-13A	5, 10, 15, 20	10		3CC #9
2CC #5	CA_2A-17A	5, 10	5, 10		No
2CC #6	CA_2A-30A	5, 10, 15, 20	5, 10		3CC #14
2CC #8	CA_2A-66A (2)	5, 10, 15, 20	5, 10, 15, 20		3CC #1
2CC #9	CA_2A-71A	5, 10, 15, 20	5, 10, 15, 20		3CC #10
2CC #10	CA_4A-4A	5, 10, 15, 20	5, 10, 15, 20		3CC #6
2CC #11	CA_4A-5A (1)	5, 10, 15, 20	5, 10		4CC #3
2CC #12	CA_4A-12A (4)	5, 10, 15, 20	5, 10		3CC #8
2CC #13	CA_4A-13A	5, 10, 15, 20	10		3CC #9
2CC #14	CA_4A-17A	5, 10	5, 10	B17 SCC Only	No
2CC #15	CA_5B	5, 10	5, 10		3CC #1
2CC #16	CA_5A-25A	5, 10	5, 10, 15, 20		No
2CC #17	CA_7C	15, 20	15, 20		No
2CC #18	CA_7A-7A (1)	5, 10, 15, 20	5, 10, 15, 20		No
2CC #19	CA_7A-12A	5, 10, 15, 20	5, 10		3CC #12
2CC #20	CA_12B	5	5, 10		3CC #13
2CC #21	CA_12A-25A	5, 10	5, 10, 15, 20		No
2CC #22	CA_12A-30A	5, 10	5, 10		3CC #14
2CC #23	CA_41A-41A (1)	5, 10, 15, 20	5, 10, 15, 20		No

Index	3CC	Supported Channel Bandwidth [MHz]			Restriction	Completely Covered by Measurement Superset
		CC1	CC2	CC3		
3CC #1	CA_2A-2A-4A	5, 10, 15, 20	5, 10, 15, 20	5, 10, 15, 20		4CC #1
3CC #2	CA_2A-2A-5A	5, 10, 15, 20	5, 10, 15, 20	5, 10		3CC #1
3CC #3	CA_2A-2A-12A	5, 10, 15, 20	5, 10, 15, 20	5, 10		No
3CC #4	CA_2C-66A	5, 10, 15, 20	5, 10, 15, 20	5, 10, 15, 20		No
3CC #5	CA_2A-2A-71A	5, 10, 15, 20	5, 10, 15, 20	5, 10, 15, 20		No
3CC #6	CA_2A-4A-4A	5, 10, 15, 20	5, 10, 15, 20	5, 10, 15, 20		No
3CC #7	CA_2A-4A-5A	5, 10, 15, 20	5, 10, 15, 20	5, 10		4CC #1
3CC #8	CA_2A-4A-12A	5, 10, 15, 20	5, 10, 15, 20	5, 10		No
3CC #9	CA_2A-4A-13A	5, 10, 15, 20	5, 10, 15, 20	10		No
3CC #10	CA_2A-4A-71A	5, 10, 15, 20	5, 10, 15, 20	5, 10, 15, 20		No
3CC #11	CA_2A-5B	5, 10, 15, 20	5, 10	5, 10		3CC #5
3CC #12	CA_2A-7A-12A	5, 10, 15, 20	5, 10, 15, 20	5, 10		No
3CC #13	CA_2A-12B	5, 10, 15, 20	5	5, 10		No
3CC #14	CA_2A-12A-30A	5, 10, 15, 20	5, 10	5, 10		No
3CC #15	CA_4A-4A-5A	5, 10, 15, 20	5, 10, 15, 20	5, 10		No
3CC #16	CA_5B-30A	5, 10	5, 10	5, 10		3CC #1
3CC #17	CA_5B-66A	5, 10	5, 10	5, 10, 15, 20		3CC #1
3CC #18	CA_5A-20A-66A	5, 10	5, 10	5, 10, 15, 20		3CC #9
3CC #19	CA_12A-66C	5, 10	5, 10, 15, 20	5, 10, 15, 20		No
3CC #20	CA_30A-66A-66A	5, 10	5, 10, 15, 20	5, 10, 15, 20		3CC #9
3CC #21	CA_41D	10, 15, 20	10, 15, 20	10, 15, 20		No
3CC #22	CA_41A-41C	5, 10, 15, 20	5, 10, 15, 20	5, 10, 15, 20		No
3CC #23	CA_66D	5, 10, 15, 20	5, 10, 15, 20	5, 10, 15, 20		No
3CC #24	CA_66A-66C	5, 10, 15, 20	5, 10, 15, 20	5, 10, 15, 20		No

Index	4CC	Supported Channel Bandwidth [MHz]				Restriction	Completely Covered by Measurement Superset
		CC1	CC2	CC3	CC4		
4CC #1	CA_2A-2A-4A-5A	5, 10, 15, 20	5, 10, 15, 20	5, 10, 15, 20	5, 10		No
4CC #2	CA_2A-2A-4A-12A	5, 10, 15, 20	5, 10, 15, 20	5, 10, 15, 20	5, 10	B12 SCC Only	No
4CC #3	CA_2A-2A-5A-30A	5, 10, 15, 20	5, 10, 15, 20	5, 10	5, 10		No
4CC #4	CA_2A-2A-5A-66A	5, 10, 15, 20	5, 10, 15, 20	5, 10	5, 10, 15, 20		No
4CC #5	CA_2A-5B-30A	5, 10, 15, 20	5, 10	5, 10	5, 10		3CC #1
4CC #6	CA_2A-5B-66A	5, 10, 15, 20	5, 10	5, 10	5, 10, 15, 20		3CC #1
4CC #7	CA_5B-30A-66A	5, 10	5, 10	5, 10	5, 10		3CC #1
4CC #8	CA_5B-66A-66A	5, 10	5, 10	5, 10, 15, 20	5, 10, 15, 20		3CC #2
4CC #9	CA_5A-30A-66A-66A	5, 10	5, 10	5, 10, 15, 20	5, 10, 15, 20		No
4CC #10	CA_41C	15, 20	15, 20	15, 20	20		No

Index	5CC	Supported Channel Bandwidth [MHz]					Restriction	Completely Covered by Measurement Superset
		CC1	CC2	CC3	CC4	CC5		
5CC #1	CA_2A-5B-30A-66A	5, 10, 15, 20	5, 10	5, 10	5, 10	5, 10, 15, 20		No
5CC #2	CA_2A-5B-66A-66A	5, 10, 15, 20	5, 10	5, 10	5, 10, 15, 20	5, 10, 15, 20		No

Table 2 – Example of Exclusion Table for 4x4 Downlink MIMO Configurations

Index	2CC	Supported Channel Bandwidth [MHz]		Restriction	Completely Covered by Measurement Superset
		CC1	CC2		
2CC #M1	CA_[2C]	5, 10, 15, 20	5, 10, 15, 20		3CC #M6
2CC #M2	CA_[2A]-2A	5, 10, 15, 20	5, 10, 15, 20		3CC #M1
2CC #M3	CA_[2A]-[2A]	5, 10, 15, 20	5, 10, 15, 20		No
2CC #M4	CA_[2A]-4A (2)	5, 10, 15, 20	5, 10, 15, 20		3CC #M1
2CC #M5	CA_[2A]-[4A] (2)	5, 10, 15, 20	5, 10, 15, 20		No
2CC #M6	CA_[2A]-5A	5, 10, 15, 20	5, 10		4CC #M3
2CC #M7	CA_[2A]-12A (1)	5, 10, 15, 20	3, 5, 10		No
2CC #M8	CA_[2A]-13A	5, 10, 15, 20	10		3CC #M4
2CC #M9	CA_[2A]-17A	5, 10	5, 10		No
2CC #M10	CA_[2A]-29A (2)	5, 10, 15, 20	5, 10	B29 SCC Only	3CC #M12
2CC #M11	CA_[2A]-30A	5, 10, 15, 20	5, 10		3CC #M5
2CC #M12	CA_[2A]-66A (2)	5, 10, 15, 20	5, 10, 15, 20		4CC #M1
2CC #M13	CA_2A-[66A] (2)	5, 10, 15, 20	5, 10, 15, 20		4CC #M2
2CC #M14	CA_[2A]-[66A] (2)	5, 10, 15, 20	5, 10, 15, 20		No
2CC #M15	CA_[2A]-71A	5, 10, 15, 20	5, 10, 15, 20		3CC #M11
2CC #M16	CA_5A-[66A]	5, 10	5, 10, 15, 20		3CC #M16
2CC #M17	CA_12A-[66A] (4)	5, 10	5, 10, 15, 20		3CC #M17
2CC #M18	CA_13A-[66A]	5, 10	5, 10, 15, 20		3CC #M19
2CC #M19	CA_30A-[66A]	5, 10	5, 10, 15, 20		3CC #M20
2CC #M20	CA_[66B]	5, 10, 15	5, 10, 15		4CC #M4
2CC #M21	CA_[66C]	5, 10, 15, 20	5, 10, 15, 20		4CC #M6
2CC #M22	CA_[66A]-66A	5, 10, 15, 20	5, 10, 15, 20		4CC #M28
2CC #M23	CA_[66A]-[66A]	5, 10, 15, 20	5, 10, 15, 20		No

Index	3CC	Supported Channel Bandwidth [MHz]			Restriction	Completely Covered by Measurement Superset
		CC1	CC2	CC3		
3CC #M1	CA_[2A]-2A-4A	5, 10, 15, 20	5, 10, 15, 20	5, 10, 15, 20		No
3CC #M2	CA_[2A]-2A-5A	5, 10, 15, 20	5, 10, 15, 20	5, 10		No
3CC #M3	CA_[2A]-2A-12A	5, 10, 15, 20	5, 10, 15, 20	5, 10		No
3CC #M4	CA_[2A]-2A-13A	5, 10, 15, 20	5, 10, 15, 20	10		No
3CC #M5	CA_[2A]-2A-30A	5, 10, 15, 20	5, 10, 15, 20	5, 10		No
3CC #M6	CA_[2C]-66A	5, 10, 15, 20	5, 10, 15, 20	5, 10, 15, 20		No
3CC #M7	CA_2C-[66A]	5, 10, 15, 20	5, 10, 15, 20	5, 10, 15, 20		No
3CC #M8	CA_[2C]-[66A]	5, 10, 15, 20	5, 10, 15, 20	5, 10, 15, 20		No
3CC #M9	CA_[2A]-2A-66A	5, 10, 15, 20	5, 10, 15, 20	5, 10, 15, 20		No
3CC #M10	CA_2A-2A-[66A]	5, 10, 15, 20	5, 10, 15, 20	5, 10, 15, 20		No
3CC #M11	CA_[2A]-2A-71A	5, 10, 15, 20	5, 10, 15, 20	5, 10, 15, 20		No
3CC #M12	CA_[2A]-4A-29A	5, 10, 15, 20	5, 10, 15, 20	5, 10	B29 SCC Only	No
3CC #M13	CA_[2A]-4A-71A	5, 10, 15, 20	5, 10, 15, 20	5, 10, 15, 20		No
3CC #M14	CA_[2A]-5B	5, 10, 15, 20	5, 10	5, 10		4CC #M1
3CC #M15	CA_[2A]-5A-66A	5, 10, 15, 20	5, 10	5, 10, 15, 20		No
3CC #M16	CA_2A-5A-[66A]	5, 10, 15, 20	5, 10	5, 10, 15, 20		No
3CC #M17	CA_2A-12A-[66A]	5, 10, 15, 20	5, 10	5, 10, 15, 20		No
3CC #M18	CA_[2A]-13A-66A	5, 10, 15, 20	5, 10	5, 10, 15, 20		No
3CC #M19	CA_2A-13A-[66A]	5, 10, 15, 20	5, 10	5, 10, 15, 20		No
3CC #M20	CA_2A-30A-[66A]	5, 10, 15, 20	5, 10	5, 10, 15, 20		No
3CC #M21	CA_[2A]-66B	5, 10, 15, 20	5, 10, 15	5, 10, 15		4CC #M3
3CC #M22	CA_[2A]-[66B]	5, 10, 15, 20	5, 10, 15	5, 10, 15		4CC #M4
3CC #M23	CA_[2A]-[66B]	5, 10, 15, 20	5, 10, 15	5, 10, 15		No
3CC #M24	CA_[2A]-66C	5, 10, 15, 20	5, 10, 15, 20	5, 10, 15, 20		4CC #M5
3CC #M25	CA_2A-[66C]	5, 10, 15, 20	5, 10, 15, 20	5, 10, 15, 20		4CC #M6
3CC #M26	CA_[2A]-[66C]	5, 10, 15, 20	5, 10, 15, 20	5, 10, 15, 20		No
3CC #M27	CA_[2A]-66A-66A	5, 10, 15, 20	5, 10, 15, 20	5, 10, 15, 20		No
3CC #M28	CA_2A-[66A]-66A	5, 10, 15, 20	5, 10, 15, 20	5, 10, 15, 20		No
3CC #M29	CA_[2A]-66A-71A	5, 10, 15, 20	5, 10, 15, 20	5, 10, 15, 20		No

Index	4CC	Supported Channel Bandwidth [MHz]				Restriction	Completely Covered by Measurement Superset
		CC1	CC2	CC3	CC4		
4CC #M1	CA_[2A]-5B-66A	5, 10, 15, 20	5, 10	5, 10	5, 10, 15, 20		No
4CC #M2	CA_2A-5B-[66A]	5, 10, 15, 20	5, 10	5, 10	5, 10, 15, 20		No
4CC #M3	CA_[2A]-5A-66B	5, 10, 15, 20	5, 10	5, 10, 15	5, 10, 15		No
4CC #M4	CA_2A-5A-[66B]	5, 10, 15, 20	5, 10	5, 10, 15	5, 10, 15		No
4CC #M5	CA_[2A]-5A-66C	5, 10, 15, 20	5, 10	5, 10, 15, 20	5, 10, 15, 20		No
4CC #M6	CA_2A-5A-[66C]	5, 10, 15, 20	5, 10	5, 10, 15, 20	5, 10, 15, 20		No

Note: [CC] indicates component carrier with 4x4 DL MIMO antenna configuration

© 2020 PCTEST

1.2 LTE Downlink Only Carrier Aggregation Test Selection and Setup

SAR test exclusion for LTE downlink Carrier Aggregation is determined by power measurements according to the number component carriers (CCs) supported by the product implementation. For those configurations required by April 2018 TCBC Workshop Notes, conducted power measurements with LTE Carrier Aggregation (CA) (downlink only) active are made in accordance to KDB Publication 941225 D05Av01r02. The RRC connection is only handled by one cell, the primary component carrier (PCC) for downlink and uplink communications. After making a data connection to the PCC, the UE device adds secondary component carrier(s) (SCC) on the downlink only. All uplink communications and acknowledgements remain identical to specifications when downlink carrier aggregation is inactive on the PCC. Additional conducted output powers are measured with the downlink carrier aggregation active for the configuration with highest measured maximum conducted power with downlink carrier aggregation inactive measured among the channel bandwidth, modulation, and RB combinations in each frequency band.

This device supports LAA with downlink carrier aggregation only. It uses carrier aggregation in the downlink to combine LTE in the unlicensed spectrum (i.e. LTE Band 46) with LTE in the licensed band (served as PCC). All uplink communications and acknowledgements on the PCC remain identical to specifications when downlink carrier aggregation is inactive.

Per FCC KDB Publication 941225 D05Av01r02, no SAR measurements are required for carrier aggregation configurations when the maximum average output power with downlink only carrier aggregation active is not more than 0.25 dB higher than the average output power with downlink only carrier aggregation inactive. All bands required for SAR testing per FCC KDB procedures were considered. Based on the measured maximum powers below, no additional SAR tests were required for DLCA SAR configurations.

General PCC and SCC configuration selection procedure

- PCC uplink channel, channel bandwidth, modulation and RB configurations were selected based on section C)3)b)ii) of KDB 941225 D05 V01r02. The downlink PCC channel was paired with the selected PCC uplink channel according to normal configurations without carrier aggregation.
- To maximize aggregated bandwidth, highest channel bandwidth available for that CA combination was selected for SCC. For inter-band CA, the SCC downlink channels were selected near the middle of their transmission bands. For contiguous intra-band CA, the downlink channel spacing between the component carriers was set to multiple of 300 kHz less than the nominal channel spacing defined in section 5.4.1A of 3GPP TS 36.521. For non-contiguous intra-band CA, the downlink channel spacing between the component carriers was set to be larger than the nominal channel spacing and provided maximum separation between the component carriers.
- All selected PCC and SCC(s) remained fully within the uplink/downlink transmission band of the respective component carrier.

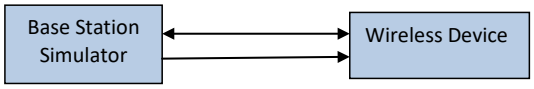

Figure 1
DL CA Power Measurement Setup

© 2020 PCTEST

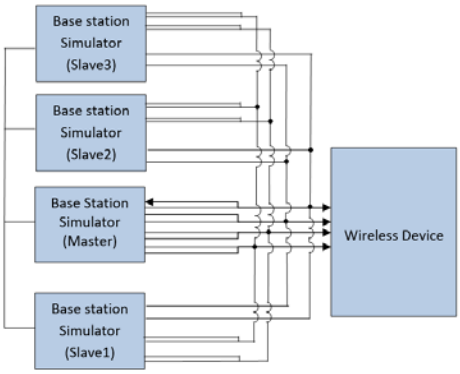

Figure 2
DL CA with DL 4x4 MIMO Power Measurement Setup

1.3 Downlink Carrier Aggregation RF Conducted Powers

1.3.1 LTE Band 71 as PCC

Table 1
Maximum Output Powers

	PCC									SCC 1				SCC 2				SCC 3				Power	
Combination	PCC Band	PCC BW [MHz]	PCC (UL) Ch.	PCC (UL) Freq. [MHz]	Mod.	PCC UL# RB	PCC UL RB Offset	PCC (DL) Channel	PCC (DL) Freq. [MHz]	SCC Band	SCC BW [MHz]	SCC (DL) Channel	SCC (DL) Freq. [MHz]	SCC Band	SCC BW [MHz]	SCC (DL) Channel	SCC (DL) Freq. [MHz]	SCC Band	SCC BW [MHz]	SCC (DL) Channel	SCC (DL) Freq. [MHz]	LTE Tx.Power with DL CA Enabled (dBm)	LTE Single Carrier Tx Power (dBm)
CA_4A-4A-71A	LTE B71	10	133172	668	QPSK	1	0	68636	622	LTE B4	20	2175	2132.5	LTE B4	10	2350	2150	-	-	-	-	25.31	25.34
CA_48A-48A-71A	LTE B71	10	133172	668	QPSK	1	0	68636	622	LTE B48	20	55990	3625	LTE B48	20	56640	3690	-	-	-	-	25.25	25.34
CA_48C-71A	LTE B71	10	133172	668	QPSK	1	0	68636	622	LTE B48	20	55990	3625	LTE B48	20	56188	3644.8	-	-	-	-	25.30	25.34
CA_2A-2A-4A-71A	LTE B71	10	133172	668	QPSK	1	0	68636	622	LTE B2	20	900	1960	LTE B2	20	700	1940	LTE B4	20	2175	2132.5	25.30	25.34
CA_2A-2A-66A-71A	LTE B71	10	133172	668	QPSK	1	0	68636	622	LTE B2	20	900	1960	LTE B2	20	700	1940	LTE B66	20	66786	2145	25.42	25.34
CA_2A-66A-66A-71A	LTE B71	10	133172	668	QPSK	1	0	68636	622	LTE B2	20	900	1960	LTE B66	20	66786	2145	LTE B66	20	67236	2190	25.37	25.34
CA_2A-66C-71A	LTE B71	10	133172	668	QPSK	1	0	68636	622	LTE B2	20	900	1960	LTE B66	20	66786	2145	LTE B66	20	66984	2164.8	25.40	25.34

1.3.2 LTE Band 12 as PCC

Table 2
Maximum Output Powers

	PCC									SCC 1				SCC 2				SCC 3				SCC 4				Power	
Combination	PCC Band	PCC BW [MHz]	PCC (UL) Ch.	PCC (UL) Freq. [MHz]	Mod.	PCC UL# RB	PCC UL RB Offset	PCC (DL) Channel	PCC (DL) Freq. [MHz]	SCC Band	SCC BW [MHz]	SCC (DL) Channel	SCC (DL) Freq. [MHz]	SCC Band	SCC BW [MHz]	SCC (DL) Channel	SCC (DL) Freq. [MHz]	SCC Band	SCC BW [MHz]	SCC (DL) Channel	SCC (DL) Freq. [MHz]	SCC Band	SCC BW [MHz]	SCC (DL) Channel	SCC (DL) Freq. [MHz]	LTE Tx.Power with DL CA Enabled (dBm)	LTE Single Carrier Tx Power (dBm)
CA_2A-12A (1)	LTE B12	5	23035	701.5	QPSK	1	12	5035	731.5	LTE B2	20	900	1960	-	-	-	-	-	-	-	-	-	-	-	-	25.20	25.11
CA_4A-12A (1)	LTE B12	5	23035	701.5	QPSK	1	12	5035	731.5	LTE B4	20	2175	2132.5	-	-	-	-	-	-	-	-	-	-	-	-	25.08	25.11
CA_4A-12A (2)	LTE B12	5	23035	701.5	QPSK	1	12	5035	731.5	LTE B4	20	2175	2132.5	-	-	-	-	-	-	-	-	-	-	-	-	25.08	25.11
CA_12A-25A	LTE B12	5	23035	701.5	QPSK	1	12	5035	731.5	LTE B25	20	8365	1962.5	-	-	-	-	-	-	-	-	-	-	-	-	25.13	25.11
CA_12A-46A	LTE B12	5	23035	701.5	QPSK	1	12	5035	731.5	LTE B46	20	50665	5537.5	-	-	-	-	-	-	-	-	-	-	-	-	25.08	25.11
CA_12A-66A (1)	LTE B12	5	23035	701.5	QPSK	1	12	5035	731.5	LTE B66	20	66786	2145	-	-	-	-	-	-	-	-	-	-	-	-	25.04	25.11
CA_12A-66A (2)	LTE B12	5	23035	701.5	QPSK	1	12	5035	731.5	LTE B66	20	66786	2145	-	-	-	-	-	-	-	-	-	-	-	-	25.04	25.11
CA_4A-4A-12A	LTE B12	5	23035	701.5	QPSK	1	12	5035	731.5	LTE B4	20	2175	2132.5	LTE B4	10	2350	2150	-	-	-	-	-	-	-	-	25.20	25.11
CA_12A-46C	LTE B12	5	23035	701.5	QPSK	1	12	5035	731.5	LTE B46	20	50665	5537.5	LTE B46	20	50467	5517.7	-	-	-	-	-	-	-	-	25.07	25.11
CA_2A-2A-4A-12A	LTE B12	5	23035	701.5	QPSK	1	12	5035	731.5	LTE B2	20	900	1960	LTE B2	20	700	1940	LTE B4	20	2175	2132.5	-	-	-	-	25.31	25.11
CA_2A-2A-12B	LTE B12	5	23035	701.5	QPSK	1	12	5035	731.5	LTE B12	10	5107	738.7	LTE B2	20	900	1960	LTE B2	20	700	1940	-	-	-	-	25.33	25.11
CA_2A-12A-66C	LTE B12	5	23035	701.5	QPSK	1	12	5035	731.5	LTE B2	20	900	1960	LTE B66	20	66786	2145	LTE B66	20	66984	2164.8	-	-	-	-	25.26	25.11
CA_12A-46D	LTE B12	5	23035	701.5	QPSK	1	12	5035	731.5	LTE B46	20	50665	5537.5	LTE B46	20	50467	5517.7	LTE B46	20	50863	5557.3	-	-	-	-	25.09	25.11
CA_2A-2A-12A-30A-66A	LTE B12	5	23035	701.5	QPSK	1	12	5035	731.5	LTE B2	20	900	1960	LTE B2	20	700	1940	LTE B30	10	9820	2355	LTE B66	20	66786	2145	24.98	25.11
CA_2A-2A-12A-66A-66A	LTE B12	5	23035	701.5	QPSK	1	12	5035	731.5	LTE B2	20	900	1960	LTE B2	20	700	1940	LTE B66	20	66786	2145	LTE B66	20	67236	2190	25.15	25.11
CA_2A-12A-30A-66A-66A	LTE B12	5	23035	701.5	QPSK	1	12	5035	731.5	LTE B2	20	900	1960	LTE B30	10	9820	2355	LTE B66	20	66786	2145	LTE B66	20	67236	2190	24.99	25.11

© 2020 PCTEST

1.3.3 LTE Band 13 as PCC

Table 3
Maximum Output Powers

	PCC								SCC 1				SCC 2				SCC 3				SCC 4				SCC 5				Power	
Combination	PCC Band	PCC BW [MHz]	PCC (UL) Ch.	PCC (UL) Freq. [MHz]	Mod.	PCC UL# RB	PCC UL RB Offset	PCC (DL) Channel	PCC (DL) Freq. [MHz]	SCC Band	SCC BW [MHz]	SCC (DL) Channel	SCC (DL) Freq. [MHz]	SCC Band	SCC BW [MHz]	SCC (DL) Channel	SCC (DL) Freq. [MHz]	SCC Band	SCC BW [MHz]	SCC (DL) Channel	SCC (DL) Freq. [MHz]	SCC Band	SCC BW [MHz]	SCC (DL) Channel	SCC (DL) Freq. [MHz]	SCC Band	SCC BW [MHz]	SCC (DL) Channel	SCC (DL) Freq. [MHz]	LTE Tx.Power with DL CA Enabled (dBm)	LTE Single Carrier Tx Power (dBm)
CA_2A-4A-13A	LTE B13	10	23230	782	QPSK	1	0	5230	751	LTE B2	20	900	1960	LTE B4	20	2175	2132.5	-	-	-	-	-	-	-	-	-	-	-	-	24.81	25.03
CA_2A-13A-46A	LTE B13	10	23230	782	QPSK	1	0	5230	751	LTE B2	20	900	1960	LTE B46	20	50665	5537.5	-	-	-	-	-	-	-	-	-	-	-	-	24.98	25.03
CA_4A-46A-13A	LTE B13	10	23230	782	QPSK	1	0	5230	751	LTE B4	20	2175	2132.5	LTE B4	20	2350	2150	-	-	-	-	-	-	-	-	-	-	-	-	24.91	25.03
CA_13A-46A-66A	LTE B13	10	23230	782	QPSK	1	0	5230	751	LTE B46	20	50665	5537.5	LTE B66	20	66786	2145	-	-	-	-	-	-	-	-	-	-	-	-	25.02	25.03
CA_2A-13A-46C	LTE B13	10	23230	782	QPSK	1	0	5230	751	LTE B2	20	900	1960	LTE B46	20	50665	5537.5	LTE B46	20	50467	5517.7	-	-	-	-	-	-	-	-	25.15	25.03
CA_2A-13A-66C	LTE B13	10	23230	782	QPSK	1	0	5230	751	LTE B2	20	900	1960	LTE B66	20	66786	2145	LTE B66	20	66984	2164.8	-	-	-	-	-	-	-	-	24.90	25.03
CA_13A-46C-66A	LTE B13	10	23230	782	QPSK	1	0	5230	751	LTE B46	20	50665	5537.5	LTE B46	20	50467	5517.7	LTE B66	20	66786	2145	-	-	-	-	-	-	-	-	24.73	25.03
CA_13A-46A-66B	LTE B13	10	23230	782	QPSK	1	0	5230	751	LTE B48	20	55990	3625	LTE B66	15	66786	2145	LTE B66	5	66879	2154.3	-	-	-	-	-	-	-	-	24.91	25.03
CA_13A-48A-66C	LTE B13	10	23230	782	QPSK	1	0	5230	751	LTE B48	20	55990	3625	LTE B66	20	66786	2145	LTE B66	20	66984	2164.8	-	-	-	-	-	-	-	-	24.88	25.03
CA_2A-2A-13A-66A-66A	LTE B13	10	23230	782	QPSK	1	0	5230	751	LTE B2	20	900	1960	LTE B2	20	700	1940	LTE B66	20	66786	2145	LTE B66	20	67236	2190	-	-	-	-	25.00	25.03
CA_2A-2A-13A-66B	LTE B13	10	23230	782	QPSK	1	0	5230	751	LTE B2	20	900	1960	LTE B2	20	700	1940	LTE B66	15	66786	2145	LTE B66	5	66879	2154.3	-	-	-	-	24.74	25.03
CA_2A-13A-48A-48A-66A	LTE B13	10	23230	782	QPSK	1	0	5230	751	LTE B2	20	900	1960	LTE B48	20	55990	3625	LTE B48	20	56640	3690	LTE B48	20	66786	2145	-	-	-	-	25.10	25.03
CA_2A-13A-48A-48C	LTE B13	10	23230	782	QPSK	1	0	5230	751	LTE B2	20	900	1960	LTE B48	20	55990	3625	LTE B48	20	56640	3690	LTE B48	20	56442	3670.2	-	-	-	-	25.17	25.03
CA_2A-13A-48C-66A	LTE B13	10	23230	782	QPSK	1	0	5230	751	LTE B2	20	900	1960	LTE B48	20	55990	3625	LTE B48	20	56188	3644.8	LTE B66	20	66786	2145	-	-	-	-	25.01	25.03
CA_2A-13A-48D	LTE B13	10	23230	782	QPSK	1	0	5230	751	LTE B2	20	900	1960	LTE B48	20	55990	3625	LTE B48	20	56188	3644.8	LTE B48	20	56386	3664.6	-	-	-	-	25.02	25.03
CA_2A-13A-66A-66B	LTE B13	10	23230	782	QPSK	1	0	5230	751	LTE B2	20	900	1960	LTE B66	20	66786	2145	LTE B66	5	67168	2183.2	LTE B66	15	67261	2192.5	-	-	-	-	24.97	25.03
CA_13A-48A-48C-66A	LTE B13	10	23230	782	QPSK	1	0	5230	751	LTE B48	20	55990	3625	LTE B48	20	55340	3560	LTE B48	20	55538	3579.8	LTE B66	20	66786	2145	-	-	-	-	25.18	25.03
CA_13A-48A-48D	LTE B13	10	23230	782	QPSK	1	0	5230	751	LTE B48	20	55990	3625	LTE B48	20	55340	3560	LTE B48	20	55538	3579.8	LTE B48	20	55736	3599.6	-	-	-	-	24.86	25.03
CA_13A-48C-48C	LTE B13	10	23230	782	QPSK	1	0	5230	751	LTE B48	20	55990	3625	LTE B48	20	56188	3644.8	LTE B48	20	55340	3560	LTE B48	20	55538	3579.8	-	-	-	-	24.85	25.03
CA_13A-48D-48A	LTE B13	10	23230	782	QPSK	1	0	5230	751	LTE B48	20	55990	3625	LTE B48	20	56188	3644.8	LTE B48	20	56386	3664.6	LTE B66	20	66786	2145	-	-	-	-	25.03	25.03
CA_13A-48C-66B	LTE B13	10	23230	782	QPSK	1	0	5230	751	LTE B48	20	55990	3625	LTE B48	20	56188	3644.8	LTE B66	15	66786	2145	LTE B66	5	66879	2154.3	-	-	-	-	25.11	25.03
CA_13A-48C-66C	LTE B13	10	23230	782	QPSK	1	0	5230	751	LTE B48	20	55990	3625	LTE B48	20	56188	3644.8	LTE B66	20	66786	2145	LTE B66	20	66984	2164.8	-	-	-	-	25.17	25.03
CA_13A-48E	LTE B13	10	23230	782	QPSK	1	0	5230	751	LTE B48	20	55990	3625	LTE B48	20	56188	3644.8	LTE B48	20	56386	3664.6	LTE B48	20	56584	3684.4	-	-	-	-	24.92	25.03
CA_2A-13A-46D-68A	LTE B13	10	23230	782	QPSK	1	0	5230	751	LTE B2	20	900	1960	LTE B46	20	50665	5537.5	LTE B46	20	50467	5517.7	LTE B46	20	50863	5557.3	LTE B66	20	66786	2145	24.77	25.03
CA_2A-13A-46E	LTE B13	10	23230	782	QPSK	1	0	5230	751	LTE B2	20	900	1960	LTE B46	20	50665	5537.5	LTE B46	20	50467	5517.7	LTE B46	20	50863	5557.3	LTE B66	20	66786	2145	24.73	25.03
CA_13A-46D-68A-68A	LTE B13	10	23230	782	QPSK	1	0	5230	751	LTE B46	20	50665	5537.5	LTE B46	20	50467	5517.7	LTE B46	20	50863	5557.3	LTE B66	20	66786	2145	LTE B66	20	67236	2190	25.10	25.03
CA_13A-46E-68A	LTE B13	10	23230	782	QPSK	1	0	5230	751	LTE B46	20	50665	5537.5	LTE B46	20	50467	5517.7	LTE B46	20	50863	5557.3	LTE B46	20	51061	5577.1	LTE B66	20	66786	2145	24.91	25.03

1.3.4 LTE Band 14 as PCC

Table 4
Maximum Output Powers

	PCC									SCC 1				SCC 2				SCC 3				SCC 4				Power	
Combination	PCC Band	PCC BW [MHz]	PCC (UL) Ch.	PCC (UL) Freq. [MHz]	Mod.	PCC UL# RB	PCC UL RB Offset	PCC (DL) Channel	PCC (DL) Freq. [MHz]	SCC Band	SCC BW [MHz]	SCC (DL) Channel	SCC (DL) Freq. [MHz]	SCC Band	SCC BW [MHz]	SCC (DL) Channel	SCC (DL) Freq. [MHz]	SCC Band	SCC BW [MHz]	SCC (DL) Channel	SCC (DL) Freq. [MHz]	SCC Band	SCC BW [MHz]	SCC (DL) Channel	SCC (DL) Freq. [MHz]	LTE Tx.Power with DL CA Enabled (dBm)	LTE Single Carrier Tx Power (dBm)
CA_2A-2A-14A-30A-66A	LTE B14	10	23330	793	QPSK	1	0	5330	763	LTE B2	20	900	1960	LTE B2	20	700	1940	LTE B30	10	9820	2355	LTE B66	20	66786	2145	24.92	25.05
CA_2A-2A-14A-66A-66A	LTE B14	10	23330	793	QPSK	1	0	5330	763	LTE B2	20	900	1960	LTE B2	20	700	1940	LTE B66	20	66786	2145	LTE B66	20	67236	2190	25.03	25.05
CA_2A-14A-30A-66A-66A	LTE B14	10	23330	793	QPSK	1	0	5330	763	LTE B2	20	900	1960	LTE B30	10	9820	2355	LTE B66	20	66786	2145	LTE B66	20	67236	2190	25.00	25.05

1.3.5 LTE Band 26 as PCC

Table 5
Maximum Output Powers

	PCC									SCC 1				SCC 2				SCC 3				Power	
Combination	PCC Band	PCC BW [MHz]	PCC (UL) Ch.	PCC (UL) Freq. [MHz]	Mod.	PCC UL# RB	PCC UL RB Offset	PCC (DL) Channel	PCC (DL) Freq. [MHz]	SCC Band	SCC BW [MHz]	SCC (DL) Channel	SCC (DL) Freq. [MHz]	SCC Band	SCC BW [MHz]	SCC (DL) Channel	SCC (DL) Freq. [MHz]	SCC Band	SCC BW [MHz]	SCC (DL) Channel	SCC (DL) Freq. [MHz]	LTE Tx.Power with DL CA Enabled (dBm)	LTE Single Carrier Tx Power (dBm)
CA_25A-25A-26A	LTE B26	3	26865	831.5	QPSK	1	14	8865	876.5	LTE B25	20	8365	1962.5	LTE B25	20	8590	1985	-	-	-	-	25.19	25.16
CA_25A-26A-41A	LTE B26	10	26865	831.5	QPSK	1	0	8865	876.5	LTE B25	20	8365	1962.5	LTE B41	20	40620	2593	-	-	-	-	25.16	25.20
CA_26A-41C	LTE B26	10	26865	831.5	QPSK	1	0	8865	876.5	LTE B41	20	40620	2593	LTE B41	20	40422	2573.2	-	-	-	-	25.13	25.20
CA_25A-26A-41C	LTE B26	10	26865	831.5	QPSK	1	0	8865	876.5	LTE B25	20	8140	1940	LTE B41	20	40620	2593	LTE B41	20	40422	2573.2	24.95	25.20

1.3.6 LTE Band 5 as PCC

Table 6
Maximum Output Powers

	PCC									SCC 1				SCC 2				SCC 3				SCC 4				SCC 5				Power	
Combination	PCC Band	PCC BW [MHz]	PCC (UL) Ch.	PCC (UL) Freq. [MHz]	Mod.	PCC UL# RB	PCC UL RB Offset	PCC (DL) Channel	PCC (DL) Freq. [MHz]	SCC Band	SCC BW [MHz]	SCC (DL) Channel	SCC (DL) Freq. [MHz]	SCC Band	SCC BW [MHz]	SCC (DL) Channel	SCC (DL) Freq. [MHz]	SCC Band	SCC BW [MHz]	SCC (DL) Channel	SCC (DL) Freq. [MHz]	SCC Band	SCC BW [MHz]	SCC (DL) Channel	SCC (DL) Freq. [MHz]	SCC Band	SCC BW [MHz]	SCC (DL) Channel	SCC (DL) Freq. [MHz]	LTE Tx.Power with DL CA Enabled (dBm)	LTE Single Carrier Tx Power (dBm)
CA_5A-5A (1)	LTE B5	3	20415	825.5	QPSK	1	0	2415	870.5	LTE B5	5	2625	891.5	-	-	-	-	-	-	-	-	-	-	-	-	-	-	-	-	25.10	25.09
CA_5A_2A	LTE B5	5	20525	836.5	QPSK	1	12	2525	881.5	LTE B25	20	8365	1962.5	-	-	-	-	-	-	-	-	-	-	-	-	-	-	-	-	25.15	25.11
CA_5A-46A (1)	LTE B5	5	20525	836.5	QPSK	1	12	2525	881.5	LTE B46	20	50665	5537.5	-	-	-	-	-	-	-	-	-	-	-	-	-	-	-	-	25.13	25.11
CA_5B (1)	LTE B5	5	20525	836.5	QPSK	1	12	2525	881.5	LTE B5	3	2486	877.6	-	-	-	-	-	-	-	-	-	-	-	-	-	-	-	-	25.18	25.11
CA_2A-5A-46A	LTE B5	5	20525	836.5	QPSK	1	12	2525	881.5	LTE B2	20	900	1960	LTE B46	20	50665	5537.5	-	-	-	-	-	-	-	-	-	-	-	-	25.08	25.11
CA_5A-46A-66A	LTE B5	5	20525	836.5	QPSK	1	12	2525	881.5	LTE B46	20	50665	5537.5	LTE B66	20	66786	2145	-	-	-	-	-	-	-	-	-	-	-	-	24.99	25.11
CA_5B-46A	LTE B5	5	20525	836.5	QPSK	1	12	2525	881.5	LTE B5	10	2453	874.3	LTE B46	20	50665	5537.5	-	-	-	-	-	-	-	-	-	-	-	-	25.23	25.11
CA_5A-46C (1)	LTE B5	5	20525	836.5	QPSK	1	12	2525	881.5	LTE B46	20	50665	5537.5	LTE B46	20	50467	5517.7	-	-	-	-	-	-	-	-	-	-	-	-	25.07	25.11
CA_2A-2A-4A-5A	LTE B5	5	20525	836.5	QPSK	1	12	2525	881.5	LTE B2	20	900	1960	LTE B2	20	700	1940	LTE B4	20	2175	2132.5	-	-	-	-	-	-	-	-	24.94	25.11
CA_2A-4A-4A-5A	LTE B5	5	20525	836.5	QPSK	1	12	2525	881.5	LTE B2	20	900	1960	LTE B4	20	2175	2132.5	LTE B4	10	2350	2150	-	-	-	-	-	-	-	-	24.90	25.11
CA_2A-4A-5B	LTE B5	5	20525	836.5	QPSK	1	12	2525	881.5	LTE B5	10	2453	874.3	LTE B2	20	900	1960	LTE B4	20	2175	2132.5	-	-	-	-	-	-	-	-	24.89	25.11
CA_2A-5A-46C	LTE B5	5	20525	836.5	QPSK	1	12	2525	881.5	LTE B2	20	900	1960	LTE B46	20	50665	5537.5	LTE B46	20	50467	5517.7	-	-	-	-	-	-	-	-	25.06	25.11
CA_4A-4A-5B	LTE B5	5	20525	836.5	QPSK	1	12	2525	881.5	LTE B5	10	2453	874.3	LTE B4	20	2175	2132.5	LTE B4	10	2350	2150	-	-	-	-	-	-	-	-	24.90	25.11
CA_5A-5A-66A-66A	LTE B5	5	20525	836.5	QPSK	1	12	2525	881.5	LTE B5	5	2425	871.5	LTE B66	20	66786	2145	LTE B66	20	67236	2190	-	-	-	-	-	-	-	-	24.83	25.11
CA_5A-5A-66B	LTE B5	5	20525	836.5	QPSK	1	12	2525	881.5	LTE B5	5	2425	871.5	LTE B66	15	66786	2145	LTE B66	5	66879	2154.3	-	-	-	-	-	-	-	-	24.84	25.11
CA_5A-5A-66C	LTE B5	5	20525	836.5	QPSK	1	12	2525	881.5	LTE B5	5	2425	871.5	LTE B66	20	66786	2145	LTE B66	20	66984	2164.8	-	-	-	-	-	-	-	-	24.97	25.11
CA_5A-46C-66A	LTE B5	5	20525	836.5	QPSK	1	12	2525	881.5	LTE B46	20	50665	5537.5	LTE B46	20	50467	5517.7	LTE B66	20	66786	2145	-	-	-	-	-	-	-	-	25.03	25.11
CA_5A-46D (1)	LTE B5	5	20525	836.5	QPSK	1	12	2525	881.5	LTE B46	20	50665	5537.5	LTE B46	20	50467	5517.7	LTE B46	20	50863	5557.3	-	-	-	-	-	-	-	-	25.09	25.11
CA_5B-46C	LTE B5	5	20525	836.5	QPSK	1	12	2525	881.5	LTE B5	5	2477	876.7	LTE B46	20	50665	5537.5	LTE B46	20	50467	5517.7	-	-	-	-	-	-	-	-	24.97	25.11
CA_2A-2A-5A-30A-66A	LTE B5	5	20525	836.5	QPSK	1	12	2525	881.5	LTE B2	20	900	1960	LTE B2	20	700	1940	LTE B30	10	9820	2355	LTE B66	20	66786	2145	-	-	-	-	24.86	25.11
CA_2A-2A-5A-66A-66A	LTE B5	5	20525	836.5	QPSK	1	12	2525	881.5	LTE B2	20	900	1960	LTE B2	20	700	1940	LTE B66	20	66786	2145	LTE B66	20	67236	2190	-	-	-	-	25.06	25.11
CA_2A-5B-30A-66A	LTE B5	5	20525	836.5	QPSK	1	12	2525	881.5	LTE B2	20	900	1960	LTE B2	20	700	1940	LTE B66	15	66786	2145	LTE B66	5	66879	2154.3	-	-	-	-	24.96	25.11
CA_2A-5A-66C	LTE B5	5	20525	836.5	QPSK	1	12	2525	881.5	LTE B2	20	900	1960	LTE B2	20	700	1940	LTE B66	20	66786	2145	LTE B66	20	66984	2164.8	-	-	-	-	25.08	25.11
CA_2A-5A-30A-66A-66A	LTE B5	5	20525	836.5	QPSK	1	12	2525	881.5	LTE B2	20	900	1960	LTE B30	10	9820	2355	LTE B66	20	66786	2145	LTE B66	20	67236	2190	-	-	-	-	24.93	25.11
CA_2A-5B-30A-66A	LTE B5	5	20525	836.5	QPSK	1	12	2525	881.5	LTE B5	10	2453	874.3	LTE B2	20	900	1960	LTE B30	10	9820	2355	LTE B66	20	66786	2145	-	-	-	-	24.92	25.11
CA_2A-5A-48A-48A-66A	LTE B5	5	20525	836.5	QPSK	1	12	2525	881.5	LTE B2	20	900	1960	LTE B48	20	55990	3625	LTE B48	20	55340	3560	LTE B48	20	66786	2145	-	-	-	-	25.03	25.11
CA_2A-5A-48A-48C	LTE B5	5	20525	836.5	QPSK	1	12	2525	881.5	LTE B2	20	900	1960	LTE B48	20	55990	3625	LTE B48	20	55340	3560	LTE B48	20	55538	3579.8	-	-	-	-	25.07	25.11
CA_2A-5A-48C-66A	LTE B5	5	20525	836.5	QPSK	1	12	2525	881.5	LTE B2	20	900	1960	LTE B48	20	55990	3625	LTE B48	20	56188	3644.8	LTE B66	20	66786	2145	-	-	-	-	25.01	25.11
CA_2A-5A-48D	LTE B5	5	20525	836.5	QPSK	1	12	2525	881.5	LTE B2	20	900	1960	LTE B48	20	55990	3625	LTE B48	20	56188	3644.8	LTE B48	20	56386	3664.6	-	-	-	-	24.95	25.11
CA_2A-5B-66A-66A	LTE B5	5	20525	836.5	QPSK	1	12	2525	881.5	LTE B5	10	2453	874.3	LTE B2	20	900	1960	LTE B66	20	66786	2145	LTE B66	20	67236	2190	-	-	-	-	25.02	25.11
CA_2A-5B-66B	LTE B5	5	20525	836.5	QPSK	1	12	2525	881.5	LTE B5	10	2453	874.3	LTE B2	20	900	1960	LTE B66	15	66786	2145	LTE B66	5	66879	2154.3	-	-	-	-	25.08	25.11
CA_2A-5B-66C	LTE B5	5	20525	836.5	QPSK	1	12	2525	881.5	LTE B5	10	2453	874.3	LTE B2	20	900	1960	LTE B66	20	66786	2145	LTE B66	20	66984	2164.8	-	-	-	-	25.12	25.11
CA_5B-30A-66A-66A	LTE B5	5	20525	836.5	QPSK	1	12	2525	881.5	LTE B5	10	2453	874.3	LTE B30	10	9820	2355	LTE B66	20	66786	2145	LTE B66	20	67236	2190	-	-	-	-	24.94	25.11
CA_5A-46E (1)	LTE B5	5	20525	836.5	QPSK	1	12	2525	881.5	LTE B46	20	50665	5537.5	LTE B46	20	50467	5517.7	LTE B46	20	50863	5557.3	LTE B46	20	51061	5577.1	-	-	-	-	24.96	25.11
CA_5B-46D	LTE B5	5	20525	836.5	QPSK	1	12	2525	881.5	LTE B5	10	2453	874.3	LTE B46	20	50665	5537.5	LTE B46	20	50467	5517.7	LTE B46	20	50863	5557.3	-	-	-	-	25.16	25.11
CA_5A-48A-48D-66A	LTE B5	5	20525	836.5	QPSK	1	12	2525	881.5	LTE B48	20	55990	3625	LTE B48	20	55340	3560	LTE B48	20	55538	3579.8	LTE B66	20	66786	2145	-	-	-	-	25.05	25.11
CA_5A-48D	LTE B5	5	20525	836.5	QPSK	1	12	2525	881.5	LTE B48	20	55990	3625	LTE B48	20	56640	3690	LTE B48	20	56442	3670.2	LTE B48	20	56244	3650.4	-	-	-	-	25.05	25.11
CA_5A-48C-48C	LTE B5	5	20525	836.5	QPSK	1	12	2525	881.5	LTE B48	20	55990	3625	LTE B48	20	56188	3644.8	LTE B48	20	55340	3560	LTE B48	20	55538	3579.8	-	-	-	-	25.06	25.11
CA_5A-48D-66A	LTE B5	5	20525	836.5	QPSK	1	12	2525	881.5	LTE B48	20	55990	3625	LTE B48	20	56188	3644.8	LTE B48	20	56386	3664.6	LTE B66	20	66786	2145	-	-	-	-	25.10	25.11
CA_5A-48E	LTE B5	5	20525	836.5	QPSK	1	12	2525	881.5	LTE B48	20	55990	3625	LTE B48	20	56188	3644.8	LTE B48	20	56386	3664.6	LTE B48	20	56584	3684.4	-	-	-	-	25.02	25.11
CA_5A-46D-66A	LTE B5	5	20525	836.5	QPSK	1	12	2525	881.5	LTE B2	20	900	1960	LTE B46	20	50665	5537.5	LTE B46	20	50467	5517.7	LTE B46	20	50863	5557.3	LTE B66	20	66786	2145	25.06	25.11
CA_2A-5A-46E	LTE B5	5	20525	836.5	QPSK	1	12	2525	881.5	LTE B2	20	900	1960	LTE B46	20	50665	5537.5	LTE B46	20	50467	5517.7	LTE B46	20	50863	5557.3	LTE B46	20	50260	5497.9	25.15	25.11
CA_5A-46D-68A-68A	LTE B5	5	20525	836.5	QPSK	1	12	2525	881.5	LTE B46	20	50665	5537.5	LTE B46	20	50467	5517.7	LTE B46	20	50863	5557.3	LTE B46	20	66786	2145	LTE B66	20	67236	2190	24.95	25.11
CA_5A-46E-68A	LTE B5	5	20525	836.5	QPSK	1	12	2525	881.5	LTE B46	20	50665	5537.5	LTE B46	20	50467	5517.7	LTE B46	20	50863	5557.3	LTE B46	20	50269	5497.9	LTE B66	20	66786	2145	25.05	25.11

© 2020 PCTEST

1.3.7 LTE Band 66 as PCC

Table 7
Maximum Output Powers

	PCC									SCC 1					SCC 2					SCC 3					SCC 4					SCC 5					SCC 6					Power
Combination	PCC Band	PCC BW [MHz]	PCC (UL) Ch.	PCC (UL) Freq. [MHz]	Mod.	PCC UL# RB	PCC UL RB Offset	PCC (DL) Channel	PCC (DL) Freq. [MHz]	SCC Band	SCC BW [MHz]	SCC (DL) Channel	SCC (DL) Freq. [MHz]	SCC Band	SCC BW [MHz]	SCC (DL) Channel	SCC (DL) Freq. [MHz]	SCC Band	SCC BW [MHz]	SCC (DL) Channel	SCC (DL) Freq. [MHz]	SCC Band	SCC BW [MHz]	SCC (DL) Channel	SCC (DL) Freq. [MHz]	SCC Band	SCC BW [MHz]	SCC (DL) Channel	SCC (DL) Freq. [MHz]	SCC Band	SCC BW [MHz]	SCC (DL) Channel	SCC (DL) Freq. [MHz]	LTE Tx.Power with DL CA Enabled (dBm)	LTE Single Carrier Tx Power (dBm)
CA_2B-66A	LTE B66	15	132222	1745	QPSK	1	36	66786	2145	LTE B2	20	900	1960	-	-	-	-	-	-	-	-	-	-	-	-	-	-	-	-	-	-	-	-	22.38	23.28
CA_12A-66A (1)	LTE B66	3	132222	1745	QPSK	1	0	66786	2145	LTE B12	10	5095	737.5	-	-	-	-	-	-	-	-	-	-	-	-	-	-	-	-	-	-	-	-	23.32	23.28
CA_12A-66A (2)	LTE B66	15	132222	1745	QPSK	1	36	66786	2145	LTE B12	10	5095	737.5	-	-	-	-	-	-	-	-	-	-	-	-	-	-	-	-	-	-	-	-	23.32	23.28
CA_5A-46A-66A	LTE B66	15	132222	1745	QPSK	1	36	66786	2145	LTE B5	10	2525	881.5	LTE B46	20	50665	5537.5	-	-	-	-	-	-	-	-	-	-	-	-	-	-	-	-	23.38	23.28
CA_13A-46A-66A	LTE B66	15	132222	1745	QPSK	1	36	66786	2145	LTE B13	10	5230	751	LTE B46	20	50665	5537.5	-	-	-	-	-	-	-	-	-	-	-	-	-	-	-	-	23.31	23.28
CA_46A-66A-66A	LTE B66	15	132222	1745	QPSK	1	36	66786	2145	LTE B46	20	50665	5537.5	-	-	-	-	-	-	-	-	-	-	-	-	-	-	-	-	-	-	-	-	23.27	23.28
CA_66A-66C	LTE B66	15	132222	1745	QPSK	1	36	66786	2145	LTE B66	20	67036	2110	-	-	-	-	-	-	-	-	-	-	-	-	-	-	-	-	-	-	-	-	23.34	23.28
CA_66C-66A	LTE B66	15	132222	1745	QPSK	1	36	66786	2145	LTE B66	20	66915	2127.5	LTE B66	20	67236	2190	-	-	-	-	-	-	-	-	-	-	-	-	-	-	-	-	23.38	23.28
CA_2A-2A-66A-71A	LTE B66	15	132222	1745	QPSK	1	36	66786	2145	LTE B2	20	900	1960	LTE B2	20	700	1940	LTE B71	20	68761	634.5	-	-	-	-	-	-	-	-	-	-	-	-	23.12	23.28
CA_2A-12A-66C	LTE B66	15	132222	1745	QPSK	1	36	66786	2145	LTE B66	20	66915	2127.5	LTE B2	20	900	1960	LTE B12	10	5095	737.5	-	-	-	-	-	-	-	-	-	-	-	-	23.31	23.28
CA_2A-12A-66C	LTE B66	15	132222	1745	QPSK	1	36	66786	2145	LTE B66	20	66915	2127.5	LTE B2	20	900	1960	LTE B13	10	5230	751	-	-	-	-	-	-	-	-	-	-	-	-	23.29	23.28
CA_2A-29A-30A-66A	LTE B66	15	132222	1745	QPSK	1	36	66786	2145	LTE B2	20	900	1960	LTE B29	10	9715	722.5	LTE B30	10	9820	2355	-	-	-	-	-	-	-	-	-	-	-	-	23.31	23.28
CA_2A-46A-46A-66A	LTE B66	15	132222	1745	QPSK	1	36	66786	2145	LTE B2	20	900	1960	LTE B46	20	50665	5537.5	LTE B46	20	47060	5180	-	-	-	-	-	-	-	-	-	-	-	-	23.33	23.28
CA_2A-46A-48A-66A	LTE B66	15	132222	1745	QPSK	1	36	66786	2145	LTE B2	20	900	1960	LTE B46	20	50665	5537.5	LTE B48	20	55990	3625	-	-	-	-	-	-	-	-	-	-	-	-	23.39	23.28
CA_2A-66A-66A-71A	LTE B66	15	132222	1745	QPSK	1	36	66786	2145	LTE B66	20	67236	2190	LTE B2	20	900	1960	LTE B71	20	68761	634.5	-	-	-	-	-	-	-	-	-	-	-	-	23.22	23.28
CA_2C-66A-66A	LTE B66	15	132222	1745	QPSK	1	36	66786	2145	LTE B66	20	67236	2190	LTE B2	20	900	1960	LTE B66	20	702	1940.2	-	-	-	-	-	-	-	-	-	-	-	-	23.14	23.28
CA_2A-66C-71A	LTE B66	15	132222	1745	QPSK	1	36	66786	2145	LTE B66	20	66915	2127.5	LTE B2	20	900	1960	LTE B71	20	68761	634.5	-	-	-	-	-	-	-	-	-	-	-	-	23.23	23.28
CA_5A-5A-66A-66A	LTE B66	15	132222	1745	QPSK	1	36	66786	2145	LTE B66	20	67236	2190	LTE B5	10	2525	881.5	LTE B5	5	2425	871.5	-	-	-	-	-	-	-	-	-	-	-	-	23.38	23.28
CA_5A-5A-66B	LTE B66	15	132222	1745	QPSK	1	36	66786	2145	LTE B66	5	66933	2135.7	LTE B5	10	2525	881.5	LTE B5	5	2425	871.5	-	-	-	-	-	-	-	-	-	-	-	-	23.20	23.28
CA_5A-5A-66C	LTE B66	15	132222	1745	QPSK	1	36	66786	2145	LTE B66	20	66915	2127.5	LTE B5	10	2525	881.5	LTE B5	5	2425	871.5	-	-	-	-	-	-	-	-	-	-	-	-	23.32	23.28
CA_5A-66C-66A	LTE B66	15	132222	1745	QPSK	1	36	66786	2145	LTE B5	10	2525	881.5	LTE B66	20	50665	5537.5	LTE B66	20	50467	5517.7	-	-	-	-	-	-	-	-	-	-	-	-	23.33	23.28
CA_13A-66C-66A	LTE B66	15	132222	1745	QPSK	1	36	66786	2145	LTE B13	10	5230	751	LTE B46	20	50665	5537.5	LTE B46	20	50467	5517.7	-	-	-	-	-	-	-	-	-	-	-	-	23.31	23.28
CA_13A-46A-66B	LTE B66	15	132222	1745	QPSK	1	36	66786	2145	LTE B66	5	66933	2135.7	LTE B13	10	5230	751	LTE B46	20	55990	3625	-	-	-	-	-	-	-	-	-	-	-	-	23.26	23.28
CA_13A-46A-66C	LTE B66	15	132222	1745	QPSK	1	36	66786	2145	LTE B66	20	66915	2127.5	LTE B13	10	5230	751	LTE B46	20	55990	3625	-	-	-	-	-	-	-	-	-	-	-	-	23.32	23.28
CA_29A-30A-66A-66A	LTE B66	15	132222	1745	QPSK	1	36	66786	2145	LTE B66	20	67236	2190	LTE B29	10	9715	722.5	LTE B30	10	9820	2355	-	-	-	-	-	-	-	-	-	-	-	-	23.25	23.28
CA_46C-66A-66A	LTE B66	15	132222	1745	QPSK	1	36	66786	2145	LTE B66	20	67236	2190	LTE B46	20	50665	5537.5	LTE B46	20	50467	5517.7	-	-	-	-	-	-	-	-	-	-	-	-	23.32	23.28
CA_46A-48A-66A-66A	LTE B66	15	132222	1745	QPSK	1	36	66786	2145	LTE B66	20	67236	2190	LTE B46	20	55990	3625	LTE B46	20	55340	3590	-	-	-	-	-	-	-	-	-	-	-	-	23.28	23.28
CA_48A-48A-66B	LTE B66	15	132222	1745	QPSK	1	36	66786	2145	LTE B66	5	66933	2135.7	LTE B48	20	55990	3625	LTE B48	20	55340	3590	-	-	-	-	-	-	-	-	-	-	-	-	23.24	23.28
CA_48A-48A-66C	LTE B66	15	132222	1745	QPSK	1	36	66786	2145	LTE B66	20	66915	2127.5	LTE B48	20	55990	3625	LTE B48	20	55340	3590	-	-	-	-	-	-	-	-	-	-	-	-	23.22	23.28
CA_48C-66A-66A	LTE B66	15	132222	1745	QPSK	1	36	66786	2145	LTE B66	20	67236	2190	LTE B48	20	55990	3625	LTE B48	20	56188	3644.8	-	-	-	-	-	-	-	-	-	-	-	-	23.30	23.28
CA_2A-2A-5A-30A-66A	LTE B66	15	132222	1745	QPSK	1	36	66786	2145	LTE B2	20	900	1960	LTE B2	20	700	1940	LTE B5	10	2525	881.5	LTE B30	10	9820	2355	-	-	-	-	-	-	-	-	23.07	23.28
CA_2A-2A-5A-66A-66A	LTE B66	15	132222	1745	QPSK	1	36	66786	2145	LTE B66	20	67236	2190	LTE B2	20	900	1960	LTE B2	20	700	1940	LTE B5	10	2525	881.5	-	-	-	-	-	-	-	-	23.37	23.28
CA_2A-2A-5A-66B	LTE B66	15	132222	1745	QPSK	1	36	66786	2145	LTE B66	5	66933	2135.7	LTE B2	20	900	1960	LTE B2	20	700	1940	LTE B5	10	2525	881.5	-	-	-	-	-	-	-	-	23.30	23.28
CA_2A-2A-5A-66C	LTE B66	15	132222	1745	QPSK	1	36	66786	2145	LTE B66	20	66915	2127.5	LTE B2	20	900	1960	LTE B2	20	700	1940	LTE B5	10	2525	881.5	-	-	-	-	-	-	-	-	23.33	23.28
CA_2A-12A-30A-66A	LTE B66	15	132222	1745	QPSK	1	36	66786	2145	LTE B2	20	900	1960	LTE B2	20	700	1940	LTE B12	10	5095	737.5	LTE B30	10	9820	2355	-	-	-	-	-	-	-	-	23.03	23.28
CA_2A-2A-12A-66A-66A	LTE B66	15	132222	1745	QPSK	1	36	66786	2145	LTE B66	20	67236	2190	LTE B2	20	900	1960	LTE B2	20	700	1940	LTE B12	10	5095	737.5	-	-	-	-	-	-	-	-	23.27	23.28
CA_2A-2A-12B-66A	LTE B66	15	132222	1745	QPSK	1	36	66786	2145	LTE B2	20	900	1960	LTE B2	20	700	1940	LTE B12	5	5095	737.5	LTE B12	5	5047	732.7	-	-	-	-	-	-	-	-	23.48	23.28
CA_2A-2A-13A-66A-66A	LTE B66	15	132222	1745	QPSK	1	36	66786	2145	LTE B66	20	67236	2190	LTE B2	20	900	1960	LTE B2	20	700	1940	LTE B13	10	5230	751	-	-	-	-	-	-	-	-	23.40	23.28
CA_2A-2A-13A-66B	LTE B66	15	132222	1745	QPSK	1	36	66786	2145	LTE B66	5	66933	2135.7	LTE B2	20	900	1960	LTE B2	20	700	1940	LTE B13	10	5230	751	-	-	-	-	-	-	-	-	23.21	23.28
CA_2A-2A-13A-66C	LTE B66	15	132222	1745	QPSK	1	36	66786	2145	LTE B66	20	66915	2127.5	LTE B2	20	900	1960	LTE B2	20	700	1940	LTE B13	10	5230	751	-	-	-	-	-	-	-	-	23.31	23.28
CA_2A-12A-30A-66A-66A	LTE B66	15	132222	1745	QPSK	1	36	66786	2145	LTE B2	20	900	1960	LTE B2	20	700	1940	LTE B14	10	5330	763	LTE B30	10	9820	2355	-	-	-	-	-	-	-	-	23.01	23.28
CA_2A-12A-66A-66A-66A	LTE B66	15	132222	1745	QPSK	1	36	66786	2145	LTE B66	20	67236	2190	LTE B2	20	900	1960	LTE B2	20	700	1940	LTE B14	10	5330	763	-	-	-	-	-	-	-	-	23.30	23.28
CA_2A-30A-66A-66A-66A	LTE B66	15	132222	1745	QPSK	1	36	66786	2145	LTE B66	20	67236	2190	LTE B2	20	900	1960	LTE B5	10	2525	881.5	LTE B30	10	9820	2355	-	-	-	-	-	-	-	-	23.09	23.28
CA_2A-5B-30A-66A	LTE B66	15	132222	1745	QPSK	1	36	66786	2145	LTE B66	5	66933	2135.7	LTE B5	10	2525	881.5	LTE B5	5	2453	874.3	LTE B30	10	9820	2355	-	-	-	-	-	-	-	-	22.90	23.28
CA_2A-5A-46A-66A-66A	LTE B66	15	132222	1745	QPSK	1	36	66786	2145	LTE B2	20	900	1960	LTE B5	10	2525	881.5	LTE B46	20	55990	3625	LTE B46	20	55340	3590	-	-	-	-	-	-	-	-	23.27	23.28
CA_2A-5A-48C-66A	LTE B66	15	132222	1745	QPSK	1	36	66786	2145	LTE B2	20	900	1960	LTE B5	10	2525	881.5	LTE B48	20	55990	3625	LTE B48	20	56188	3644.8	-	-	-	-	-	-	-	-	23.38	23.28
CA_2A-5B-66A-66A	LTE B66	15	132222	1745	QPSK	1	36	66786	2145	LTE B66	5	66933	2135.7	LTE B2	20	900	1960	LTE B5	10	2525	881.5	LTE B5	5	2453	874.3	-	-	-	-	-	-	-	-	23.43	23.28
CA_2A-5B-66C	LTE B66	15	132222	1745	QPSK	1	36	66786	2145	LTE B66	20	66915	2127.5	LTE B2	20	900	1960	LTE B5	10	2525	881.5	LTE B5	5	2453	874.3	-	-	-	-	-	-	-	-	23.23	23.28
CA_2A-5B-66C	LTE B66	15	132222	1745	QPSK	1	36	66786	2145	LTE B66	20	66915	2127.5	LTE B2	20	900	1960	LTE B5	10	2525	881.5	LTE B5	5	2453	874.3	-	-	-	-	-	-	-	-	23.27	23.28
CA_2A-12A-30A-66A-66A	LTE B66	15	132222	1745	QPSK	1	36	66786	2145	LTE B66	20	67236	2190	LTE B2	20	900	1960	LTE B12	10	5095	737.5	LTE B30	10	9820	2355	-	-	-	-	-	-	-	-	23.03	23.28
CA_2A-12B-66A-66A	LTE B66	15	132222	1745	QPSK	1	36	66786	2145	LTE B66	20	67236	2190	LTE B2	20	900	1960	LTE B12	5	5095	737.5	LTE B12	5	5047	732.7	-	-	-	-	-	-	-	-	23.37	23.28
CA_2A-13A-46A-46A-66A	LTE B66	15	132222	1745	QPSK	1	36	66786	2145	LTE B2	20	900	1960	LTE B13	10	5230	751	LTE B46	20	55990	3625	LTE B46	20	55340	3590	-	-	-	-	-	-	-	-	23.35	23.28
CA_2A-13A-48C-66A	LTE B66	15	132222	1745	QPSK	1	36	66786	2145	LTE B2	20	900	1960	LTE B13	10	5230	751	LTE B48	20	55990	3625	LTE B48	20	56188	3644.8	-	-	-	-	-	-	-	-	23.27	23.28
CA_2A-13A-66A-66B	LTE B66	15	132222	1745	QPSK	1	36	66786	2145	LTE B66	5	67168	2183.2	LTE B66	15	67261	2192.5	LTE B2	20	900	1960	LTE B13	10	5230	751	-	-	-	-	-	-	-	-	23.18	23.28
CA_2A-13A-66B-66A	LTE B66	15	132222	1745	QPSK	1	36	66786	2145	LTE B66	5	66933	2135.7	LTE B66	20	67236	2190	LTE B2	20	900	1960	LTE B13	10	5230	751	-	-	-	-	-	-	-	-	23.40	23.28
CA_2A-14A-30A-66A-66A	LTE B66	15	132222	1745	QPSK	1	36	66786	2145	LTE B66	20	67236	2190	LTE B2	20	900	1960	LTE B14	10	5330	763	LTE B30	10	9820	2355	-	-	-	-	-	-	-	-	22.96	23.28
CA_2A-46A-46C-66A	LTE B66	15	132222	1745	QPSK	1	36	66786	2145	LTE B2	20	900	1960	LTE B46	20	50665	5537.5	LTE B46	20	50467	5517.7	LTE B46	20	53540	3825	-	-	-	-	-	-	-	-	23.20	23.28
CA_2A-46A-48C-66A	LTE B66	15	132222	1745	QPSK	1	36	66786	2145	LTE B2	20	900	1960	LTE B46	20	50665	5537.5	LTE B46	20	55990	3625	LTE B48	20	56188	3644.8	-	-	-	-	-	-	-	-	23.28	23.28
CA_2A-48C-48A-66A	LTE B66	15	132222	1745	QPSK	1	36	66786	2145	LTE B2	20	900	1960	LTE B46	20	50665	5537.5	LTE B46	20	50467	5517.7	LTE B48	20	55990	3625	LTE B48	20	56188	3644.8	-	-	-	-	23.33	23.28
CA_2A-5A-30A-66A-66A	LTE B66	15	132222	1745	QPSK	1	36	66786	2145	LTE B2	20	900	1960	LTE B5	10	2525	881.5	LTE B30	10	9820	2355	LTE B66	20	67236	2190	-	-	-	-	-	-	-	-	23.36	23.28
CA_2A-5A-66A-66A	LTE B66	15	132222	1745	QPSK	1	36	66786	2145	LTE B66	20	67236	2190	LTE B2	20	900	1960	LTE B5	10	2525	881.5	LTE B5	5	2453	874.3	-	-	-	-	-	-	-	-	22.95	23.28
CA_5A-46A-66A-66C	LTE B66	15	132222	1745	QPSK	1	36	66786	2145	LTE B5	10	2525	881.5	LTE B46	20	50665	5537.5	LTE B46	20	55340	3590	LTE B46	20	55338	3579.8	-	-	-	-	-	-	-	-	23.23	23.28
CA_5A-48D-66A	LTE B66	15	132222	1745	QPSK	1	36	66786	2145	LTE B5	10	2525	881.5	LTE B48	20	55990	3625	LTE B48	20	56188	3644.8	LTE B48	20	56386	3664.6	-	-	-	-	-	-	-	-	23.33	23.28
CA_13A-46A-66C-66A	LTE B66	15	132222	1745	QPSK	1	36	66786	2145	LTE B5	10	2525	881.5	LTE B46	20	50665	5537.5	LTE B46	20	50467	5517.7	LTE B46	20	53540	3590	LTE B46	20	55338	3579.8	-	-	-	-	23.31	23.28
CA_13A-66C-66A	LTE B66	15	132222	1745	QPSK	1	36	66786	2145	LTE B13	10	5230	751	LTE B46	20	50665	5537.5	LTE B46	20	50467	5517.7	LTE B46	20	53540	3590	LTE B46	20	55338	3579.8	-	-	-	-	23.29	23.28
CA_13A-46C-66B	LTE B66	15	132222	1745	QPSK	1	36	66786	2145	LTE B66	5	66933	2135.7	LTE B13	10	5230	751	LTE B46	20	55990	3625	LTE B46	20	56188	3644.8	LTE B46	20	56386	3664.6	-	-	-	-	23.25	23.28
CA_13A-46C-66C	LTE B66	15	132222	1745	QPSK	1	36	66786	2145	LTE B66	20	66915	2127.5	LTE B13	10	5230	751	LTE B46	20	55990	3625	LTE B46	20	56188	3644.8	-	-	-	-	-	-	-	-	23.22	23.28
CA_46A-48D-66A	LTE B66	15	132222	1745	QPSK	1	36	66786	2145	LTE B46	20	50665	5537.5	LTE B46	20	53540	3825	LTE B46	20	53342	3805.2	LTE B46	20	53544	3785.4	-	-	-	-	-	-	-	-	23.21	23.28
CA_48A-48C-66B	LTE B66	15	132222	1745	QPSK	1	36	66786	2145	LTE B66	5	66933	2135.7	LTE B48	20	55990	3625	LTE B48	20	55340	3590	LTE B48	20	55338	3579.8	-	-	-	-	-	-	-	-	23.38	23.28
CA_48A-48C-66C	LTE B66	15	132222	1745	QPSK	1	36	66786	2145	LTE B66	20	66915	2127.5	LTE B48	20	55990	3625	LTE B48	20	55340	3590	LTE B48	20	55338	3579.8	-	-	-	-	-	-	-	-	23.30	23.28
CA_48A-48D-66A	LTE B66	15	132222	1745	QPSK	1	36	66786	2145	LTE B66	20	55990	3625	LTE B48	20	56640	3690	LTE B48	20	56442	3670.2	LTE B48	20	56244	3650.4	-	-	-	-	-	-	-	-	23.20	23.28
CA_48C-48C-66A	LTE B66	15	132222	1745	QPSK	1	36	66786	2145	LTE B48	20	55990	3625	LTE B48	20	56188	3644.8	LTE B48	20	55340	3590	LTE B48	20	55338	3579.8	-	-	-	-	-	-	-	-	23.23	23.28
CA_2A-5A-46D-66A	LTE B66	15	132222	1745	QPSK	1	36	66786	2145	LTE B2	20	900	1960	LTE B5	10	2525	881.5	LTE B46	20	50665	5537.5	LTE B46	20	50467	5517.7	LTE B46	20	53540	3590	-	-	-	-	23.27	23.28
CA_2A-13A-46D-66A	LTE B66	15	132222	1745	QPSK	1	36	66786	2145	LTE B2	20	900	1960	LTE B13	10	5230	751	LTE B46	20	50665	5537.5	LTE B46	20	50467	5517.7	LTE B46	20	53540	3590	-	-	-	-	23.33	23.28
CA_2A-46A-48D-66A	LTE B66	15	132222	1745	QPSK	1	36	66786	2145	LTE B2	20	900	1960	LTE B46	20	50665	5537.5	LTE B46	20	50467	5517.7	LTE B46	20	55990	3625	LTE B46	20	56188	3644.8	-	-	-	-	23.23	23.28
CA_2A-48C-48C-66A	LTE B66	15	132222	1745	QPSK	1	36	66786	2145	LTE B2	20	900	1960	LTE B46	20	50665	5537.5	LTE B46	20	50467	5517.7	LTE B48	20	55990	3625	LTE B48	20	56188	3644.8	-	-	-	-	23.33	23.28
CA_2A-48D-48C-66A	LTE B66	15	132222	1745	QPSK	1	36	66786	2145	LTE B2	20	900	1960	LTE B46	20	50665	5537.5	LTE B46	20	50467	5517.7	LTE B48	20	55990	3625	LTE B48	20	56188	3644.8	-	-	-	-	23.39	23.28
CA_2A-48E-66A-66A	LTE B66	15	132222	1745	QPSK	1	36	66786	2145	LTE B2	20	900	1960	LTE B46	20	50665	5537.5	LTE B46	20	50467	5517.7	LTE B48	20	55990	3625	LTE B48	20	56188	3644.8	LTE B48	20	56188	3644.8	23.38	23.28
CA_2A-48E-66B	LTE B66	15	132222	1745	QPSK	1	36	66786	2145	LTE B66	5	66933	2135.7	LTE B2	20	900	1960	LTE B46	20	50665	5537.5	LTE B46	20	50467	5517.7	LTE B48	20	55990	3625	LTE B48	20	55990	3625	23.33	23.28
CA_2A-48E-66C	LTE B66	15	132222	1745	QPSK	1	36	66786	2145	LTE B66	20	66915	2127.5	LTE B2	20	900	1960	LTE B46	20	50665	5537.5	LTE B46	20	50467	5517.7	LTE B48	20	55990	3625	LTE B48	20	51061	5577.1	23.21	23.28
CA_48C-48E-66A	LTE B66	15	132222	1745	QPSK	1	36	66786	2145	LTE B48	20	50665	5537.5	LTE B46	20	50467	5517.7	LTE B48	20	55990	3625	LTE B48	20	56188	3644.8	LTE B48	20	56188	3644.8	LTE B48	20	50792	3605.2	23.28	23.28
CA_48E-48C-66A	LTE B66	15	132222	1745	QPSK	1	36	66786	2145	LTE B48	20	50665	5537.5	LTE B46	20	50467	5517.7	LTE B48	20	55990	3625	LTE B48	20	56188	3644.8	LTE B48	20	56386	3664.6	LTE B48	20	50269	5497.9	23.28	23.28

1.3.8 LTE Band 25 as PCC

Table 8
Maximum Output Powers

	PCC									SCC 1				SCC 2				SCC 3				SCC 4				Power
Combination	PCC Band	PCC BW [MHz]	PCC (UL) Ch.	PCC (UL) Freq. [MHz]	Mod.	PCC UL# RB	PCC UL RB Offset	PCC (DL) Channel	PCC (DL) Freq. [MHz]	SCC Band	SCC BW [MHz]	SCC (DL) Channel	SCC (DL) Freq. [MHz]	SCC Band	SCC BW [MHz]	SCC (DL) Channel	SCC (DL) Freq. [MHz]	SCC Band	SCC BW [MHz]	SCC (DL) Channel	SCC (DL) Freq. [MHz]	SCC Band	SCC BW [MHz]	SCC (DL) Channel	SCC (DL) Freq. [MHz]	LTE Tx.Power with DL CA Enabled (dBm)	LTE Single Carrier Tx Power (dBm)
CA_5A-29A	LTE B25	5	26665	1912.5	QPSK	1	24	8665	1992.5	LTE B5	10	2525	881.5	-	-	-	-	-	-	-	-	-	-	-	-	23.56	23.52
CA_12A-25A	LTE B25	5	26665	1912.5	QPSK	1	24	8665	1992.5	LTE B12	10	5095	737.5	-	-	-	-	-	-	-	-	-	-	-	-	23.56	23.52
CA_25A-46A	LTE B25	5	26665	1912.5	QPSK	1	24	8665	1992.5	LTE B46	20	50665	5537.5	-	-	-	-	-	-	-	-	-	-	-	-	23.54	23.52
CA_25A-25A-26A	LTE B25	5	26665	1912.5	QPSK	1	24	8665	1992.5	LTE B25	20	8140	1940	LTE B26	5	8865	876.5	-	-	-	-	-	-	-	-	23.71	23.52
CA_25A-25A-41A	LTE B25	5	26665	1912.5	QPSK	1	24	8665	1992.5	LTE B25	20	8140	1940	LTE B41	20	40620	2593	-	-	-	-	-	-	-	-	23.65	23.52
CA_25A-26A-41A	LTE B25	5	26665	1912.5	QPSK	1	24	8665	1992.5	LTE B26	15	8865	876.5	LTE B41	20	40620	2593	-	-	-	-	-	-	-	-	23.68	23.52
CA_25A-41C	LTE B25	5	26665	1912.5	QPSK	1	24	8665	1992.5	LTE B41	20	40620	2593	LTE B41	20	40422	2573.2	-	-	-	-	-	-	-	-	23.61	23.52
CA_25A-46C	LTE B25	5	26665	1912.5	QPSK

1.3.10 LTE Band 41 as PCC

Table 10
Maximum Output Powers

	PCC									SCC 1				SCC 2				SCC 3				SCC 4				Power	
Combination	PCC Band	PCC BW [MHz]	PCC (UL) Ch.	PCC (UL) Freq. [MHz]	Mod.	PCC UL# RB	PCC UL RB Offset	PCC (DL) Channel	PCC (DL) Freq. [MHz]	SCC Band	SCC BW [MHz]	SCC (DL) Channel	SCC (DL) Freq. [MHz]	SCC Band	SCC BW [MHz]	SCC (DL) Channel	SCC (DL) Freq. [MHz]	SCC Band	SCC BW [MHz]	SCC (DL) Channel	SCC (DL) Freq. [MHz]	SCC Band	SCC BW [MHz]	SCC (DL) Channel	SCC (DL) Freq. [MHz]	LTE Tx.Power with DL CA Enabled (dBm)	LTE Single Carrier Tx Power (dBm)
CA_41A-41A (1)	LTE B41	10	40620	2593	QPSK	1	25	40620	2593	LTE B41	20	41490	2680	-	-	-	-	-	-	-	-	-	-	-	-	24.62	24.60
CA_41A-41C	LTE B41	10	40620	2593	QPSK	1	25	40620	2593	LTE B41	20	41292	2660.2	LTE B41	20	41490	2680	-	-	-	-	-	-	-	-	24.62	24.60
CA_41C-41A	LTE B41	10	40620	2593	QPSK	1	25	40620	2593	LTE B41	20	40764	2607.4	LTE B41	20	41490	2680	-	-	-	-	-	-	-	-	24.69	24.60
CA_41A-41D	LTE B41	10	40620	2593	QPSK	1	25	40620	2593	LTE B41	20	41094	2640.4	LTE B41	20	41292	2660.2	LTE B41	20	41490	2680	-	-	-	-	24.44	24.60
CA_41D-41A	LTE B41	10	40620	2593	QPSK	1	25	40620	2593	LTE B41	20	40476	2578.6	LTE B41	20	40764	2607.4	LTE B41	20	41490	2680	-	-	-	-	24.41	24.60
CA_41C-41C	LTE B41	10	40620	2593	QPSK	1	25	40620	2593	LTE B41	20	40476	2578.6	LTE B41	20	41292	2660.2	LTE B41	20	41490	2680	-	-	-	-	24.47	24.60
CA_41E	LTE B41	15	40620	2593	QPSK	1	36	40620	2593	LTE B41	20	40449	2575.9	LTE B41	20	40791	2610.1	LTE B41	20	40989	2629.9	-	-	-	-	24.44	24.56
CA_41C-41D	LTE B41	10	40620	2593	QPSK	1	25	40620	2593	LTE B41	20	40476	2578.6	LTE B41	20	41094	2640.4	LTE B41	20	41292	2660.2	LTE B41	20	41490	2680	24.64	24.60
CA_41D-41C	LTE B41	10	40620	2593	QPSK	1	25	40620	2593	LTE B41	20	40476	2578.6	LTE B41	20	40764	2607.4	LTE B41	20	41292	2660.2	LTE B41	20	41490	2680	24.66	24.60

1.3.11 LTE Band 48 as PCC

Table 11
Maximum Output Powers

	PCC									SCC 1				SCC 2				SCC 3				SCC 4				Power	
Combination	PCC Band	PCC BW [MHz]	PCC (UL) Ch.	PCC (UL) Freq. [MHz]	Mod.	PCC UL# RB	PCC UL RB Offset	PCC (DL) Channel	PCC (DL) Freq. [MHz]	SCC Band	SCC BW [MHz]	SCC (DL) Channel	SCC (DL) Freq. [MHz]	SCC Band	SCC BW [MHz]	SCC (DL) Channel	SCC (DL) Freq. [MHz]	SCC Band	SCC BW [MHz]	SCC (DL) Channel	SCC (DL) Freq. [MHz]	SCC Band	SCC BW [MHz]	SCC (DL) Channel	SCC (DL) Freq. [MHz]	LTE Tx.Power with DL CA Enabled (dBm)	LTE Single Carrier Tx Power (dBm)
CA_48A-48A	LTE B48	5	56232	3649.2	QPSK	1	12	56232	3649.2	LTE B48	20	55340	3560	-	-	-	-	-	-	-	-	-	-	-	-	23.42	23.45
CA_48A-48C	LTE B48	5	56232	3649.2	QPSK	1	12	56232	3649.2	LTE B48	20	55340	3560	LTE B48	20	55538	3579.8	-	-	-	-	-	-	-	-	23.41	23.45
CA_48C-48A	LTE B48	5	56232	3649.2	QPSK	1	12	56232	3649.2	LTE B48	20	56115	3637.5	LTE B48	20	55340	3560	-	-	-	-	-	-	-	-	23.42	23.45
CA_48A-48D	LTE B48	5	56232	3649.2	QPSK	1	12	56232	3649.2	LTE B48	20	55340	3560	LTE B48	20	55538	3579.8	LTE B48	20	55736	3599.6	-	-	-	-	23.40	23.45
CA_48D-48A	LTE B48	5	56232	3649.2	QPSK	1	12	56232	3649.2	LTE B48	20	56115	3637.5	LTE B48	20	55917	3617.7	LTE B48	20	56640	3690	-	-	-	-	23.42	23.45
CA_48C-48C	LTE B48	5	56232	3649.2	QPSK	1	12	56232	3649.2	LTE B48	20	56115	3637.5	LTE B48	20	55340	3560	LTE B48	20	55538	3579.8	-	-	-	-	23.41	23.45
CA_48E	LTE B48	5	56232	3649.2	QPSK	1	12	56232	3649.2	LTE B48	20	56115	3637.5	LTE B48	20	55917	3617.7	LTE B48	20	55719	3597.9	-	-	-	-	23.46	23.45
CA_48C-48D	LTE B48	5	56232	3649.2	QPSK	1	12	56232	3649.2	LTE B48	20	56115	3637.5	LTE B48	20	55340	3560	LTE B48	20	55538	3579.8	LTE B48	20	55736	3599.6	23.45	23.45
CA_48D-48C	LTE B48	5	56232	3649.2	QPSK	1	12	56232	3649.2	LTE B48	20	56115	3637.5	LTE B48	20	55917	3617.7	LTE B48	20	56640	3690	LTE B48	20	56442	3670.2	23.38	23.45
CA_48F	LTE B48	5	56232	3649.2	QPSK	1	12	56232	3649.2	LTE B48	20	56115	3637.5	LTE B48	20	55917	3617.7	LTE B48	20	55719	3597.9	LTE B48	20	55521	3578.1	23.48	23.45

© 2020 PCTEST

1.4 DL CA with DL 4x4 MIMO RF Conduction Powers

This device supports downlink 4x4 MIMO operations for some LTE bands. Uplink transmission is limited to a single output stream. When carrier aggregation was applicable, the general test selection and setup procedures described in Section 1.2 were applied.

Per May 2017 TCB Workshop Notes, SAR for 4x4 DL MIMO was not needed since the maximum average output power in 4x4 DL MIMO mode was not more than 0.25 dB higher than the maximum output power with 4x4 DL MIMO inactive. Additionally, SAR for 4x4 MIMO Downlink Carrier Aggregation was not needed since the maximum average output power in 4x4 MIMO Downlink Carrier Aggregation mode was not more than 0.25 dB higher than the maximum output power with 4x4 MIMO Downlink and downlink carrier aggregation inactive.

1.4.1 LTE 4x4 MIMO DL Standalone Powers

Table 12
Maximum Output Powers

LTE Band	Bandwidth [MHz]	Channel	Frequency [MHz]	Modulation	RB Size	RB Offset	4x4 DL MIMO Tx. Power [dBm]	Single Antenna Tx. Power [dBm]
66	3	132322	1745	QPSK	1	0	23.32	23.29
25	5	26665	1912.5	QPSK	1	24	23.75	23.52
30	10	27710	2310	QPSK	1	0	23.81	23.79
41	10	40620	2593	QPSK	1	25	24.53	24.60
48	5	56232	3649.2	QPSK	1	12	23.44	23.45

© 2020 PCTEST

1.4.2 LTE Band 71 as PCC

Table 13
Maximum Output Powers

	PCC										SCC 1					SCC 2					SCC 3					Power	
Combination	PCC Band	PCC BW [MHz]	PCC [UL] Ch.	PCC (UL) Freq. [MHz]	Mod.	PCC UL# RB	PCC UL RB Offset	PCC [DL] Ch.	PCC (DL) Freq. [MHz]	DL Ant. Config.	SCC Band	SCC BW [MHz]	SCC [DL] Ch.	SCC (DL) Freq. [MHz]	DL Ant. Config.	SCC Band	SCC BW [MHz]	SCC [DL] Ch.	SCC (DL) Freq. [MHz]	DL Ant. Config.	SCC Band	SCC BW [MHz]	SCC [DL] Ch.	SCC (DL) Freq. [MHz]	DL Ant. Config.	LTE Tx.Power with DL CA Enabled (dBm)	LTE Single Carrier Tx Power (dBm)
CA_[4A]-4A-71A	LTE B71	10	133172	668	QPSK	1	0	68636	622	2x2	LTE B4	20	2175	2132.5	4x4	LTE B4	10	2350	2150	2x2	-	-	-	-	-	25.22	25.34
CA_[4A]-[4A]-71A	LTE B71	10	133172	668	QPSK	1	0	68636	622	2x2	LTE B4	20	2175	2132.5	4x4	LTE B4	10	2350	2150	4x4	-	-	-	-	-	25.24	25.34
CA_[2A]-2A-4A-71A	LTE B71	10	133172	668	QPSK	1	0	68636	622	2x2	LTE B2	20	900	1960	4x4	LTE B2	20	700	1940	2x2	LTE B4	20	2175	2132.5	2x2	25.38	25.34
CA_2A-2A-[4A]-71A	LTE B71	10	133172	668	QPSK	1	0	68636	622	2x2	LTE B2	20	900	1960	2x2	LTE B2	20	700	1940	2x2	LTE B4	20	2175	2132.5	4x4	25.41	25.34
CA_[2A]-[2A]-4A-71A	LTE B71	10	133172	668	QPSK	1	0	68636	622	2x2	LTE B2	20	900	1960	4x4	LTE B2	20	700	1940	4x4	LTE B4	20	2175	2132.5	2x2	25.43	25.34
CA_[2A]-2A-[4A]-71A	LTE B71	10	133172	668	QPSK	1	0	68636	622	2x2	LTE B2	20	900	1960	4x4	LTE B2	20	700	1940	2x2	LTE B4	20	2175	2132.5	4x4	25.45	25.34
CA_[2A]-[2A]-[4A]-71A	LTE B71	10	133172	668	QPSK	1	0	68636	622	2x2	LTE B2	20	900	1960	4x4	LTE B2	20	700	1940	4x4	LTE B4	20	2175	2132.5	4x4	25.48	25.34
CA_[2A]-2A-66A-71A	LTE B71	10	133172	668	QPSK	1	0	68636	622	2x2	LTE B2	20	900	1960	4x4	LTE B2	20	700	1940	2x2	LTE B66	20	66786	2145	2x2	25.47	25.34
CA_2A-2A-[66A]-71A	LTE B71	10	133172	668	QPSK	1	0	68636	622	2x2	LTE B2	20	900	1960	2x2	LTE B2	20	700	1940	2x2	LTE B66	20	66786	2145	4x4	25.52	25.34
CA_[2A]-[2A]-66A-71A	LTE B71	10	133172	668	QPSK	1	0	68636	622	2x2	LTE B2	20	900	1960	4x4	LTE B2	20	700	1940	4x4	LTE B66	20	66786	2145	2x2	25.53	25.34
CA_[2A]-2A-[66A]-71A	LTE B71	10	133172	668	QPSK	1	0	68636	622	2x2	LTE B2	20	900	1960	4x4	LTE B2	20	700	1940	2x2	LTE B66	20	66786	2145	4x4	25.45	25.34
CA_[2A]-[2A]-[66A]-71A	LTE B71	10	133172	668	QPSK	1	0	68636	622	2x2	LTE B2	20	900	1960	4x4	LTE B2	20	700	1940	4x4	LTE B66	20	66786	2145	4x4	25.47	25.34
CA_[2A]-66A-66A-71A	LTE B71	10	133172	668	QPSK	1	0	68636	622	2x2	LTE B2	20	900	1960	4x4	LTE B66	20	66786	2145	2x2	LTE B66	20	67236	2190	2x2	25.30	25.34
CA_2A-[66A]-66A-71A	LTE B71	10	133172	668	QPSK	1	0	68636	622	2x2	LTE B2	20	900	1960	2x2	LTE B66	20	66786	2145	4x4	LTE B66	20	67236	2190	2x2	25.18	25.34
CA_[2A]-[66A]-66A-71A	LTE B71	10	133172	668	QPSK	1	0	68636	622	2x2	LTE B2	20	900	1960	4x4	LTE B66	20	66786	2145	4x4	LTE B66	20	67236	2190	2x2	25.28	25.34
CA_2A-[66A]-[66A]-71A	LTE B71	10	133172	668	QPSK	1	0	68636	622	2x2	LTE B2	20	900	1960	2x2	LTE B66	20	66786	2145	4x4	LTE B66	20	67236	2190	4x4	25.43	25.34
CA_[2A]-[66A]-[66A]-71A	LTE B71	10	133172	668	QPSK	1	0	68636	622	2x2	LTE B2	20	900	1960	4x4	LTE B66	20	66786	2145	4x4	LTE B66	20	67236	2190	4x4	25.26	25.34
CA_[2A]-66C-71A	LTE B71	10	133172	668	QPSK	1	0	68636	622	2x2	LTE B2	20	900	1960	4x4	LTE B66	20	66786	2145	2x2	LTE B66	20	66984	2164.8	2x2	25.22	25.34
CA_2A-[66C]-71A	LTE B71	10	133172	668	QPSK	1	0	68636	622	2x2	LTE B2	20	900	1960	2x2	LTE B66	20	66786	2145	4x4	LTE B66	20	66984	2164.8	4x4	25.38	25.34
CA_[2A]-[66C]-71A	LTE B71	10	133172	668	QPSK	1	0	68636	622	2x2	LTE B2	20	900	1960	4x4	LTE B66	20	66786	2145	4x4	LTE B66	20	66984	2164.8	4x4	25.37	25.34

1.4.3 LTE Band 12 as PCC

Table 14
Maximum Output Powers

	PCC										SCC 1					SCC 2					SCC 3					SCC 4					Power	
Combination	PCC Band	PCC BW [MHz]	PCC [UL] Ch.	PCC (UL) Freq. [MHz]	Mod.	PCC UL# RB	PCC UL RB Offset	PCC [DL] Ch.	PCC (DL) Freq. [MHz]	DL Ant. Config.	SCC Band	SCC BW [MHz]	SCC [DL] Ch.	SCC (DL) Freq. [MHz]	DL Ant. Config.	SCC Band	SCC BW [MHz]	SCC [DL] Ch.	SCC (DL) Freq. [MHz]	DL Ant. Config.	SCC Band	SCC BW [MHz]	SCC [DL] Ch.	SCC (DL) Freq. [MHz]	DL Ant. Config.	SCC Band	SCC BW [MHz]	SCC [DL] Ch.	SCC (DL) Freq. [MHz]	DL Ant. Config.	LTE Tx.Power with DL CA Enabled (dBm)	LTE Single Carrier Tx Power (dBm)
CA_[2A]-12A (1)	LTE B12	5	23035	701.5	QPSK	1	12	5035	731.5	2x2	LTE B2	20	900	1960	4x4	-	-	-	-	-	-	-	-	-	-	-	-	-	-	-	25.06	25.11
CA_[4A]-12A (1)	LTE B12	5	23035	701.5	QPSK	1	12	5035	731.5	2x2	LTE B4	20	2175	2132.5	4x4	-	-	-	-	-	-	-	-	-	-	-	-	-	-	-	24.93	25.11
CA_[4A]-12A (2)	LTE B12	5	23035	701.5	QPSK	1	12	5035	731.5	2x2	LTE B4	20	2175	2132.5	4x4	-	-	-	-	-	-	-	-	-	-	-	-	-	-	-	24.93	25.11
CA_12A-[66A] (1)	LTE B12	5	23035	701.5	QPSK	1	12	5035	731.5	2x2	LTE B66	20	66786	2145	4x4	-	-	-	-	-	-	-	-	-	-	-	-	-	-	-	24.87	25.11
CA_12A-[66A] (2)	LTE B12	5	23035	701.5	QPSK	1	12	5035	731.5	2x2	LTE B66	20	66786	2145	4x4	-	-	-	-	-	-	-	-	-	-	-	-	-	-	-	24.87	25.11
CA_[4A]-4A-12A	LTE B12	5	23035	701.5	QPSK	1	12	5035	731.5	2x2	LTE B4	20	2175	2132.5	4x4	LTE B4	10	2350	2150	2x2	-	-	-	-	-	-	-	-	-	-	25.20	25.11
CA_[4A]-[4A]-12A	LTE B12	5	23035	701.5	QPSK	1	12	5035	731.5	2x2	LTE B4	20	2175	2132.5	4x4	LTE B4	10	2350	2150	4x4	-	-	-	-	-	-	-	-	-	-	25.11	25.11
CA_[2A]-2A-4A-12A	LTE B12	5	23035	701.5	QPSK	1	12	5035	731.5	2x2	LTE B2	20	900	1960	4x4	LTE B2	20	700	1940	2x2	LTE B4	20	2175	2132.5	2x2	-	-	-	-	-	25.34	25.11
CA_2A-2A-[4A]-12A	LTE B12	5	23035	701.5	QPSK	1	12	5035	731.5	2x2	LTE B2	20	900	1960	2x2	LTE B2	20	700	1940	2x2	LTE B4	20	2175	2132.5	4x4	-	-	-	-	-	25.13	25.11
CA_[2A]-[2A]-4A-12A	LTE B12	5	23035	701.5	QPSK	1	12	5035	731.5	2x2	LTE B2	20	900	1960	4x4	LTE B2	20	700	1940	4x4	LTE B4	20	2175	2132.5	2x2	-	-	-	-	-	25.27	25.11
CA_[2A]-2A-[4A]-12A	LTE B12	5	23035	701.5	QPSK	1	12	5035	731.5	2x2	LTE B2	20	900	1960	4x4	LTE B2	20	700	1940	2x2	LTE B4	20	2175	2132.5	4x4	-	-	-	-	-	25.15	25.11
CA_[2A]-[2A]-[4A]-12A	LTE B12	5	23035	701.5	QPSK	1	12	5035	731.5	2x2	LTE B2	20	900	1960	4x4	LTE B2	20	700	1940	4x4	LTE B4	20	2175	2132.5	4x4	-	-	-	-	-	25.07	25.11
CA_[2A]-2A-12B	LTE B12	5	23035	701.5	QPSK	1	12	5035	731.5	2x2	LTE B12	10	5107	738.7	2x2	LTE B2	20	900	1960	4x4	LTE B2	20	700	1940	2x2	-	-	-	-	-	25.09	25.11
CA_[2A]-[2A]-12B	LTE B12	5	23035	701.5	QPSK	1	12	5035	731.5	2x2	LTE B12	10	5107	738.7	2x2	LTE B2	20	900	1960	4x4	LTE B2	20	700	1940	4x4	-	-	-	-	-	25.08	25.11
CA_[2A]-12A-66C	LTE B12	5	23035	701.5	QPSK	1	12	5035	731.5	2x2	LTE B2	20	900	1960	4x4	LTE B66	20	66786	2145	2x2	LTE B66	20	66984	2164.8	2x2	-	-	-	-	-	25.04	25.11
CA_2A-12A-[66C]	LTE B12	5	23035	701.5	QPSK	1	12	5035	731.5	2x2	LTE B2	20	900	1960	2x2	LTE B66	20	66786	2145	4x4	LTE B66	20	66984	2164.8	4x4	-	-	-	-	-	25.02	25.11
CA_[2A]-12A-[66C]	LTE B12	5	23035	701.5	QPSK	1	12	5035	731.5	2x2	LTE B2	20	900	1960	4x4	LTE B66	20	66786	2145	4x4	LTE B66	20	66984	2164.8	4x4	-	-	-	-	-	25.27	25.11
CA_[2A]-2A-12A-30A-66A	LTE B12	5	23035	701.5	QPSK	1	12	5035	731.5	2x2	LTE B2	20	900	1960	4x4	LTE B2	20	700	1940	2x2	LTE B30	10	9820	2355	2x2	LTE B66	20	66786	2145	2x2	24.92	25.11
CA_2A-2A-12A-[30A]-66A	LTE B12	5	23035	701.5	QPSK	1	12	5035	731.5	2x2	LTE B2	20	900	1960	2x2	LTE B2	20	700	1940	2x2	LTE B30	10	9820	2355	4x4	LTE B66	20	66786	2145	2x2	24.88	25.11
CA_2A-2A-12A-30A-[66A]	LTE B12	5	23035	701.5	QPSK	1	12	5035	731.5	2x2	LTE B2	20	900	1960	2x2	LTE B2	20	700	1940	2x2	LTE B30	10	9820	2355	2x2	LTE B66	20	66786	2145	4x4	24.85	25.11
CA_[2A]-[2A]-12A-30A-66A	LTE B12	5	23035	701.5	QPSK	1	12	5035	731.5	2x2	LTE B2	20	900	1960	4x4	LTE B2	20	700	1940	4x4	LTE B30	10	9820	2355	2x2	LTE B66	20	66786	2145	2x2	24.95	25.11
CA_[2A]-2A-12A-[30A]-66A	LTE B12	5	23035	701.5	QPSK	1	12	5035	731.5	2x2	LTE B2	20	900	1960	4x4	LTE B2	20	700	1940	2x2	LTE B30	10	9820	2355	4x4	LTE B66	20	66786	2145	2x2	25.01	25.11
CA_[2A]-2A-12A-30A-[66A]	LTE B12	5	23035	701.5	QPSK	1	12	5035	731.5	2x2	LTE B2	20	900	1960	4x4	LTE B2	20	700	1940	2x2	LTE B30	10	9820	2355	2x2	LTE B66	20	66786	2145	4x4	24.91	25.11
CA_[2A]-2A-12A-[30A]-[66A]	LTE B12	5	23035	701.5	QPSK	1	12	5035	731.5	2x2	LTE B2	20	900	1960	4x4	LTE B2	20	700	1940	2x2	LTE B30	10	9820	2355	4x4	LTE B66	20	66786	2145	4x4	24.83	25.11
CA_[2A]-[2A]-12A-[30A]-66A	LTE B12	5	23035	701.5	QPSK	1	12	5035	731.5	2x2	LTE B2	20	900	1960	4x4	LTE B2	20	700	1940	4x4	LTE B30	10	9820	2355	4x4	LTE B66	20	66786	2145	2x2	24.93	25.11
CA_[2A]-[2A]-12A-30A-[66A]	LTE B12	5	23035	701.5	QPSK	1	12	5035	731.5	2x2	LTE B2	20	900	1960	4x4	LTE B2	20	700	1940	4x4	LTE B30	10	9820	2355	2x2	LTE B66	20	66786	2145	4x4	24.91	25.11
CA_[2A]-2A-12A-[30A]-[66A]	LTE B12	5	23035	701.5	QPSK	1	12	5035	731.5	2x2	LTE B2	20	900	1960	4x4	LTE B2	20	700	1940	2x2	LTE B30	10	9820	2355	4x4	LTE B66	20	66786	2145	4x4	24.89	25.11
CA_[2A]-[2A]-12A-[30A]-[66A]	LTE B12	5	23035	701.5	QPSK	1	12	5035	731.5	2x2	LTE B2	20	900	1960	4x4	LTE B2	20	700	1940	4x4	LTE B30	10	9820	2355	4x4	LTE B66	20	66786	2145	4x4	24.88	25.11
CA_[2A]-2A-12A-66A-66A	LTE B12	5	23035	701.5	QPSK	1	12	5035	731.5	2x2	LTE B2	20	900	1960	4x4	LTE B2	20	700	1940	2x2	LTE B66	20	66786	2145	2x2	LTE B66	20	67236	2190	2x2	24.91	25.11
CA_2A-2A-12A-[66A]-66A	LTE B12	5	23035	701.5	QPSK	1	12	5035	731.5	2x2	LTE B2	20	900	1960	2x2	LTE B2	20	700	1940	2x2	LTE B66	20	66786	2145	4x4	LTE B66	20	67236	2190	2x2	24.89	25.11
CA_[2A]-[2A]-12A-66A-66A	LTE B12	5	23035	701.5	QPSK	1	12	5035	731.5	2x2	LTE B2	20	900	1960	4x4	LTE B2	20	700	1940	4x4	LTE B66	20	66786	2145	2x2	LTE B66	20	67236	2190	2x2	24.97	25.11
CA_[2A]-2A-12A-[66A]-66A	LTE B12	5	23035	701.5	QPSK	1	12	5035	731.5	2x2	LTE B2	20	900	1960	4x4	LTE B2	20	700	1940	2x2	LTE B66	20	66786	2145	4x4	LTE B66	20	67236	2190	2x2	25.00	25.11
CA_2A-2A-12A-[66A]-[66A]	LTE B12	5	23035	701.5	QPSK	1	12	5035	731.5	2x2	LTE B2	20	900	1960	2x2	LTE B2	20	700	1940	2x2	LTE B66	20	66786	2145	4x4	LTE B66	20	67236	2190	4x4	24.99	25.11
CA_[2A]-[2A]-12A-[66A]-66A	LTE B12	5	23035	701.5	QPSK	1	12	5035	731.5	2x2	LTE B2	20	900	1960	2x2	LTE B2	20	700	1940	4x4	LTE B66	20	66786	2145	4x4	LTE B66	20	67236	2190	4x4	25.01	25.11
CA_[2A]-12A-30A-[66A]-66A	LTE B12	5	23035	701.5	QPSK	1	12	5035	731.5	2x2	LTE B2	20	900	1960	4x4	LTE B30	10	9820	2355	2x2	LTE B66	20	66786	2145	2x2	LTE B66	20	67236	2190	2x2	24.88	25.11
CA_2A-12A-[30A]-66A-66A	LTE B12	5	23035	701.5	QPSK	1	12	5035	731.5	2x2	LTE B2	20	900	1960	2x2	LTE B30	10	9820	2355	4x4	LTE B66	20	66786	2145	2x2	LTE B66	20	67236	2190	2x2	24.99	25.11
CA_2A-12A-30A-66A-66A	LTE B12	5	23035	701.5	QPSK	1	12	5035	731.5	2x2	LTE B2	20	900	1960	2x2	LTE B30	10	9820	2355	2x2	LTE B66	20	66786	2145	4x4	LTE B66	20	67236	2190	2x2	25.01	25.11
CA_[2A]-12A-[30A]-66A-66A	LTE B12	5	23035	701.5	QPSK	1	12	5035	731.5	2x2	LTE B2	20	900	1960	4x4	LTE B30	10	9820	2355	4x4	LTE B66	20	66786	2145	2x2	LTE B66	20	67236	2190	2x2	24.98	25.11
CA_[2A]-12A-30A-[66A]-66A	LTE B12	5	23035	701.5	QPSK	1	12	5035	731.5	2x2	LTE B2	20	900	1960	4x4	LTE B30	10	9820	2355	2x2	LTE B66	20	66786	2145	4x4	LTE B66	20	67236	2190	2x2	24.96	25.11
CA_2A-12A-[30A]-[66A]-66A	LTE B12	5	23035	701.5	QPSK	1	12	5035	731.5	2x2	LTE B2	20	900	1960	2x2	LTE B30	10	9820	2355	4x4	LTE B66	20	66786	2145	4x4	LTE B66	20	67236	2190	2x2	25.02	25.11
CA_2A-12A-30A-[66A]-[66A]	LTE B12	5	23035	701.5	QPSK	1	12	5035	731.5	2x2	LTE B2	20	900	1960	2x2	LTE B30	10	9820	2355	2x2	LTE B66	20	66786	2145	4x4	LTE B66	20	67236	2190	4x4	24.99	25.11
CA_[2A]-12A-[30A]-[66A]-66A	LTE B12	5	23035	701.5	QPSK	1	12	5035	731.5	2x2	LTE B2	20	900	1960	4x4	LTE B30	10	9820	2355	4x4	LTE B66	20	66786	2145	4x4	LTE B66	20	67236	2190	2x2	25.00	25.11
CA_2A-12A-[30A]-[66A]-[66A]	LTE B12	5	23035	701.5	QPSK	1	12	5035	731.5	2x2	LTE B2	20	900	1960	2x2	LTE B30	10	9820	2355	4x4	LTE B66	20	66786	2145	4x4	LTE B66	20	67236	2190	4x4	25.01	25.11
CA_[2A]-12A-[30A]-[66A]-[66A]	LTE B12	5	23035	701.5	QPSK	1	12	5035	731.5	2x2	LTE B2	20	900	1960	4x4	LTE B30	10	9820	2355	4x4	LTE B66	20	66786	2145	4x4	LTE B66	20	67236	2190	4x4	25.03	25.11

© 2020 PCTEST

1.4.4 LTE Band 13 as PCC

Table 15
Maximum Output Powers

	PCC									SCC 1					SCC 2					SCC 3					SCC 4					SCC 5					Power	
Combination	PCC Band	PCC BW [MHz]	PCC (UL) Ch.	PCC (UL) Freq. [MHz]	Mod.	PCC UL# RB	PCC UL RB Offset	PCC (DL) Ch.	PCC (DL) Freq. [MHz]	DL Ant. Config.	SCC Band	SCC BW [MHz]	SCC (UL) Ch.	SCC (DL) Freq. [MHz]	DL Ant. Config.	SCC Band	SCC BW [MHz]	SCC (DL) Ch.	SCC (DL) Freq. [MHz]	DL Ant. Config.	SCC Band	SCC BW [MHz]	SCC (DL) Ch.	SCC (DL) Freq. [MHz]	DL Ant. Config.	SCC Band	SCC BW [MHz]	SCC (DL) Ch.	SCC (DL) Freq. [MHz]	DL Ant. Config.	SCC Band	SCC BW [MHz]	SCC (DL) Ch.	SCC (DL) Freq. [MHz]	DL Ant. Config.	LTE Tx.Power with DL CA Enabled (dBm)	LTE Single Carrier Tx Power (dBm)
CA_(2A)-4A-13A	LTE B13	10	23230	782	QPSK	1	0	5230	751	2x2	LTE B2	20	900	1960	4x4	LTE B4	20	2175	2132.5	4x4	-	-	-	-	-	-	-	-	-	-	-	-	-	-	-	25.01	25.03
CA_(2A)-(4A)-13A	LTE B13	10	23230	782	QPSK	1	0	5230	751	2x2	LTE B2	20	900	1960	2x2	LTE B4	20	2175	2132.5	4x4	-	-	-	-	-	-	-	-	-	-	-	-	-	-	-	24.99	25.03
CA_(2A)-(4A)-13A	LTE B13	10	23230	782	QPSK	1	0	5230	751	2x2	LTE B2	20	900	1960	4x4	LTE B4	20	2175	2132.5	4x4	-	-	-	-	-	-	-	-	-	-	-	-	-	-	-	24.96	25.03
CA_(2A)-13A-46A	LTE B13	10	23230	782	QPSK	1	0	5230	751	2x2	LTE B2	20	900	1960	4x4	LTE B46	20	55965	5537.5	2x2	-	-	-	-	-	-	-	-	-	-	-	-	-	-	-	25.01	25.03
CA_(4A)-4A-13A	LTE B13	10	23230	782	QPSK	1	0	5230	751	2x2	LTE B4	20	2175	2132.5	4x4	LTE B4	10	2350	2150	2x2	-	-	-	-	-	-	-	-	-	-	-	-	-	-	-	25.27	25.03
CA_(4A)-(4A)-13A	LTE B13	10	23230	782	QPSK	1	0	5230	751	2x2	LTE B4	20	2175	2132.5	4x4	LTE B4	10	2350	2150	4x4	-	-	-	-	-	-	-	-	-	-	-	-	-	-	-	25.04	25.03
CA_13A-46A-(66A)	LTE B13	10	23230	782	QPSK	1	0	5230	751	2x2	LTE B46	20	50665	5537.5	2x2	LTE B66	20	66786	2145	4x4	-	-	-	-	-	-	-	-	-	-	-	-	-	-	-	25.16	25.03
CA_(2A)-13A-46C	LTE B13	10	23230	782	QPSK	1	0	5230	751	2x2	LTE B2	20	900	1960	4x4	LTE B46	20	50665	5537.5	2x2	LTE B46	20	50467	5517.7	2x2	-	-	-	-	-	-	-	-	-	-	-	25.11	25.03
CA_(2A)-13A-66C	LTE B13	10	23230	782	QPSK	1	0	5230	751	2x2	LTE B2	20	900	1960	4x4	LTE B66	20	66786	2145	2x2	LTE B66	20	66984	2164.8	2x2	-	-	-	-	-	-	-	-	-	-	-	25.08	25.03
CA_2A-13A-(66C)	LTE B13	10	23230	782	QPSK	1	0	5230	751	2x2	LTE B2	20	900	1960	2x2	LTE B66	20	66786	2145	4x4	LTE B66	20	66984	2164.8	4x4	-	-	-	-	-	-	-	-	-	-	-	25.09	25.03
CA_(2A)-13A-(66C)	LTE B13	10	23230	782	QPSK	1	0	5230	751	2x2	LTE B2	20	900	1960	4x4	LTE B66	20	66786	2145	4x4	LTE B66	20	66984	2164.8	4x4	-	-	-	-	-	-	-	-	-	-	-	25.10	25.03
CA_13A-46C-(66A)	LTE B13	10	23230	782	QPSK	1	0	5230	751	2x2	LTE B46	20	50665	5537.5	2x2	LTE B66	20	66786	2145	4x4	LTE B66	20	66984	2164.8	4x4	-	-	-	-	-	-	-	-	-	-	-	24.89	25.03
CA_13A-(46A)-66B	LTE B13	10	23230	782	QPSK	1	0	5230	751	2x2	LTE B46	20	55990	3625	4x4	LTE B66	15	66786	2145	2x2	LTE B66	5	66879	2154.3	2x2	-	-	-	-	-	-	-	-	-	-	-	24.75	25.03
CA_13A-46A-(66B)	LTE B13	10	23230	782	QPSK	1	0	5230	751	2x2	LTE B46	20	55990	3625	2x2	LTE B66	15	66786	2145	4x4	LTE B66	5	66879	2154.3	4x4	-	-	-	-	-	-	-	-	-	-	-	25.06	25.03
CA_(2A)-13A-(66B)	LTE B13	10	23230	782	QPSK	1	0	5230	751	2x2	LTE B2	20	900	1960	2x2	LTE B66	15	66786	2145	4x4	LTE B66	5	66879	2154.3	4x4	-	-	-	-	-	-	-	-	-	-	-	24.76	25.03
CA_13A-(46A)-66C	LTE B13	10	23230	782	QPSK	1	0	5230	751	2x2	LTE B46	20	55990	3625	4x4	LTE B66	20	66786	2145	2x2	LTE B66	20	66984	2164.8	2x2	-	-	-	-	-	-	-	-	-	-	-	25.00	25.03
CA_13A-46A-(66C)	LTE B13	10	23230	782	QPSK	1	0	5230	751	2x2	LTE B46	20	55990	3625	2x2	LTE B66	20	66786	2145	4x4	LTE B66	20	66984	2164.8	4x4	-	-	-	-	-	-	-	-	-	-	-	25.03	25.03
CA_13A-(46A)-66C	LTE B13	10	23230	782	QPSK	1	0	5230	751	2x2	LTE B46	20	55990	3625	4x4	LTE B66	20	66786	2145	4x4	LTE B66	20	66984	2164.8	4x4	-	-	-	-	-	-	-	-	-	-	-	25.05	25.03
CA_(2A)-2A-13A-66A-66A	LTE B13	10	23230	782	QPSK	1	0	5230	751	2x2	LTE B2	20	900	1960	4x4	LTE B2	20	700	1940	2x2	LTE B66	20	66786	2145	2x2	LTE B66	20	67236	2190	2x2	-	-	-	-	-	-	24.86	25.03
CA_2A-2A-13A-(66A)-66A	LTE B13	10	23230	782	QPSK	1	0	5230	751	2x2	LTE B2	20	900	1960	2x2	LTE B2	20	700	1940	2x2	LTE B66	20	66786	2145	4x4	LTE B66	20	67236	2190	2x2	-	-	-	-	-	-	24.94	25.03
CA_(2A)-(2A)-13A-66A	LTE B13	10	23230	782	QPSK	1	0	5230	751	2x2	LTE B2	20	900	1960	4x4	LTE B2	20	700	1940	4x4	LTE B66	20	66786	2145	4x4	LTE B66	20	67236	2190	2x2	-	-	-	-	-	-	25.11	25.03
CA_(2A)-2A-13A-(66A)-66A	LTE B13	10	23230	782	QPSK	1	0	5230	751	2x2	LTE B2	20	900	1960	4x4	LTE B2	20	700	1940	2x2	LTE B66	20	66786	2145	4x4	LTE B66	20	67236	2190	2x2	-	-	-	-	-	-	25.11	25.03
CA_(2A)-(2A)-13A-(66A)-66A	LTE B13	10	23230	782	QPSK	1	0	5230	751	2x2	LTE B2	20	900	1960	4x4	LTE B2	20	700	1940	4x4	LTE B66	20	66786	2145	4x4	LTE B66	20	67236	2190	4x4	-	-	-	-	-	-	24.98	25.03
CA_(2A)-2A-13A-66A	LTE B13	10	23230	782	QPSK	1	0	5230	751	2x2	LTE B2	20	900	1960	2x2	LTE B2	20	700	1940	2x2	LTE B66	15	66786	2145	2x2	LTE B66	5	66879	2154.3	2x2	-	-	-	-	-	-	25.08	25.03
CA_(2A)-(2A)-13A-66A	LTE B13	10	23230	782	QPSK	1	0	5230	751	2x2	LTE B2	20	900	1960	4x4	LTE B2	20	700	1940	2x2	LTE B66	15	66786	2145	2x2	LTE B66	5	66879	2154.3	2x2	-	-	-	-	-	-	25.07	25.03
CA_(2A)-2A-13A-(66A)-66A	LTE B13	10	23230	782	QPSK	1	0	5230	751	2x2	LTE B2	20	900	1960	2x2	LTE B2	20	700	1940	4x4	LTE B66	15	66786	2145	4x4	LTE B66	5	66879	2154.3	2x2	-	-	-	-	-	-	25.06	25.03
CA_(2A)-(2A)-13A-(66A)-66A	LTE B13	10	23230	782	QPSK	1	0	5230	751	2x2	LTE B2	20	900	1960	4x4	LTE B2	20	700	1940	4x4	LTE B66	15	66786	2145	4x4	LTE B66	5	66879	2154.3	4x4	-	-	-	-	-	-	25.07	25.03
CA_2A-13A-66A	LTE B13	10	23230	782	QPSK	1	0	5230	751	2x2	LTE B2	20	900	1960	2x2	LTE B2	20	700	1940	2x2	LTE B66	15	66786	2145	2x2	LTE B66	5	66879	2154.3	2x2	-	-	-	-	-	-	25.09	25.03
CA_(2A)-2A-13A-66A	LTE B13	10	23230	782	QPSK	1	0	5230	751	2x2	LTE B2	20	900	1960	2x2	LTE B2	20	700	1940	2x2	LTE B66	15	66786	2145	4x4	LTE B66	5	66879	2154.3	4x4	-	-	-	-	-	-	25.07	25.03
CA_2A-2A-13A-66A	LTE B13	10	23230	782	QPSK	1	0	5230	751	2x2	LTE B2	20	900	1960	4x4	LTE B2	20	700	1940	2x2	LTE B66	15	66786	2145	2x2	LTE B66	5	66879	2154.3	2x2	-	-	-	-	-	-	25.09	25.03
CA_(2A)-(2A)-13A-66A	LTE B13	10	23230	782	QPSK	1	0	5230	751	2x2	LTE B2	20	900	1960	4x4	LTE B2	20	700	1940	2x2	LTE B66	15	66786	2145	4x4	LTE B66	5	66879	2154.3	4x4	-	-	-	-	-	-	25.08	25.03
CA_(2A)-2A-13A-(66A)-66A	LTE B13	10	23230	782	QPSK	1	0	5230	751	2x2	LTE B2	20	900	1960	4x4	LTE B2	20	700	1940	4x4	LTE B66	15	66786	2145	4x4	LTE B66	5	66879	2154.3	4x4	-	-	-	-	-	-	25.11	25.03
CA_(2A)-(2A)-13A-(66A)-66A	LTE B13	10	23230	782	QPSK	1	0	5230	751	2x2	LTE B2	20	900	1960	4x4	LTE B2	20	700	1940	2x2	LTE B66	15	66786	2145	2x2	LTE B66	5	66879	2154.3	2x2	-	-	-	-	-	-	25.10	25.03
CA_(2A)-13A-(46A)-66A	LTE B13	10	23230	782	QPSK	1	0	5230	751	2x2	LTE B2	20	900	1960	2x2	LTE B46	20	55990	3625	2x2	LTE B46	20	56640	3690	2x2	LTE B66	20	66786	2145	2x2	-	-	-	-	-	-	25.12	25.03
CA_(2A)-13A-46A-(66A)	LTE B13	10	23230	782	QPSK	1	0	5230	751	2x2	LTE B2	20	900	1960	4x4	LTE B46	20	55990	3625	2x2	LTE B46	20	56640	3690	2x2	LTE B66	20	66786	2145	4x4	-	-	-	-	-	-	25.10	25.03
CA_(2A)-13A-(46A)-66A	LTE B13	10	23230	782	QPSK	1	0	5230	751	2x2	LTE B2	20	900	1960	2x2	LTE B46	20	55990	3625	4x4	LTE B46	20	56640	3690	2x2	LTE B66	20	66786	2145	2x2	-	-	-	-	-	-	25.14	25.03
CA_(2A)-13A-(46A)-(66A)-66A	LTE B13	10	23230	782	QPSK	1	0	5230	751	2x2	LTE B2	20	900	1960	4x4	LTE B46	20	55990	3625	4x4	LTE B46	20	56640	3690	2x2	LTE B66	20	66786	2145	2x2	-	-	-	-	-	-	25.11	25.03
CA_(2A)-13A-46A-(66A)-66A	LTE B13	10	23230	782	QPSK	1	0	5230	751	2x2	LTE B2	20	900	1960	2x2	LTE B46	20	55990	3625	2x2	LTE B46	20	56640	3690	2x2	LTE B66	20	66786	2145	4x4	-	-	-	-	-	-	25.09	25.03
CA_(2A)-13A-(46A)-46A-66A	LTE B13	10	23230	782	QPSK	1	0	5230	751	2x2	LTE B2	20	900	1960	4x4	LTE B46	20	55990	3625	4x4	LTE B46	20	56640	3690	2x2	LTE B66	20	66786	2145	4x4	-	-	-	-	-	-	25.14	25.03
CA_(2A)-13A-(46A)-(46A)-66A	LTE B13	10	23230	782	QPSK	1	0	5230	751	2x2	LTE B2	20	900	1960	4x4	LTE B46	20	55990	3625	4x4	LTE B46	20	56640	3690	2x2	LTE B66	20	66786	2145	4x4	-	-	-	-	-	-	25.11	25.03
CA_(2A)-13A-(46A)-46A-66A	LTE B13	10	23230	782	QPSK	1	0	5230	751	2x2	LTE B2	20	900	1960	2x2	LTE B46	20	55990	3625	4x4	LTE B46	20	56640	3690	2x2	LTE B66	20	66786	2145	4x4	-	-	-	-	-	-	25.07	25.03
CA_(2A)-13A-(46A)-46A-(66A)	LTE B13	10	23230	782	QPSK	1	0	5230	751	2x2	LTE B2	20	900	1960	4x4	LTE B46	20	55990	3625	4x4	LTE B46	20	56640	3690	2x2	LTE B66	20	66786	2145	4x4	-	-	-	-	-	-	25.08	25.03
CA_(2A)-13A-(46A)-(46A)-66A	LTE B13	10	23230	782	QPSK	1	0	5230	751	2x2	LTE B2	20	900	1960	4x4	LTE B46	20	55990	3625	4x4	LTE B46	20	56640	3690	2x2	LTE B66	20	66786	2145	4x4	-	-	-	-	-	-	25.11	25.03
CA_(2A)-13A-(46A)-46A-(66A)	LTE B13	10	23230	782	QPSK	1	0	5230	751	2x2	LTE B2	20	900	1960	4x4	LTE B46	20	55990	3625	4x4	LTE B46	20	56640	3690	2x2	LTE B66	20	66786	2145	4x4	-	-	-	-	-	-	25.07	25.03
CA_(2A)-13A-(46A)-(46A)-(66A)	LTE B13	10	23230	782	QPSK	1	0	5230	751	2x2	LTE B2	20	900	1960	4x4	LTE B46	20	55990	3625	4x4	LTE B46	20	56640	3690	2x2	LTE B66	20	66786	2145	4x4	-	-	-	-	-	-	25.09	25.03
CA_(2A)-13A-48B	LTE B13	10	23230	782	QPSK	1	0	5230	751	2x2	LTE B2	20	900	1960	2x2	LTE B48	20	55990	3625	4x4	LTE B48	20	56188	3644.8	4x4	LTE B66	20	66786	2145	2x2	-	-	-	-	-	-	25.15	25.03
CA_(2A)-13A-(48B)	LTE B13	10	23230	782	QPSK	1	0	5230	751	2x2	LTE B2	20	900	1960	2x2	LTE B48	20	55990	3625	4x4	LTE B48	20	56188	3644.8	4x4	LTE B66	20	66786	2145	4x4	-	-	-	-	-	-	25.13	25.03
CA_(2A)-13A-(48B)	LTE B13	10	23230	782	QPSK	1	0	5230	751	2x2	LTE B2	20	900	1960	4x4	LTE B48	20	55990	3625	4x4	LTE B48	20	56188	3644.8	4x4	LTE B66	20	66786	2145	4x4	-	-	-	-	-	-	25.14	25.03
CA_(2A)-13A-66A-66B	LTE B13	10	23230	782	QPSK	1	0	5230	751	2x2	LTE B2	20	900	1960	4x4	LTE B66	20	66786	2145	2x2	LTE B66	5	67168	2183.2	2x2	LTE B66	15	67261	2192.5	2x2	-	-	-	-	-	-	24.91	25.03
CA_2A-13A-(66A)-66B	LTE B13	10	23230	782	QPSK	1	0	5230	751	2x2	LTE B2	20	900	1960	2x2	LTE B66	20	66786	2145	4x4	LTE B66	5	67168	2183.2	2x2	LTE B66	15	67261	2192.5	2x2	-	-	-	-	-	-	24.88	25.03
CA_2A-13A-(66A)-(66B)	LTE B13	10	23230	782	QPSK	1	0	5230	751	2x2	LTE B2	20	900	1960	2x2	LTE B66	20	66786	2145	4x4	LTE B66	5	67168	2183.2	4x4	LTE B66	15	67261	2192.5	4x4	-	-	-	-	-	-	24.99	25.03
CA_(2A)-13A-(66A)-66B	LTE B13	10	23230	782	QPSK	1	0	5230	751	2x2	LTE B2	20	900	1960	4x4	LTE B66	20	66786	2145	2x2	LTE B66	5	67168	2183.2	2x2	LTE B66	15	67261	2192.5	2x2	-	-	-	-	-	-	24.86	25.03
CA_(2A)-13A-(66A)-(66B)	LTE B13	10	23230	782	QPSK	1	0	5230	751	2x2	LTE B2	20	900	1960	4x4	LTE B66	20	66786	2145	4x4	LTE B66	5	67168	2183.2	4x4	LTE B66	15	67261	2192.5	4x4	-	-	-	-	-	-	24.95	25.03
CA_2A-13A-(66A)-(66B)	LTE B13	10	23230	782	QPSK	1	0	5230	751	2x2	LTE B2	20	900	1960	2x2	LTE B66	20	66786	2145	4x4	LTE B66	5	67168	2183.2	4x4	LTE B66	15	67261	2192.5	4x4	-	-	-	-	-	-	24.98	25.03
CA_(2A)-13A-(66A)-(66B)	LTE B13	10	23230	782	QPSK	1	0	5230	751	2x2	LTE B2	20	900	1960	4x4	LTE B66	20	66786	2145	4x4	LTE B66	5	67168	2183.2	4x4	LTE B66	15	67261	2192.5	4x4	-	-	-	-	-	-	24.99	25.03
CA_13A-46A-48C	LTE B13	10	23230	782	QPSK	1	0	5230	751	2x2	LTE B46	20	55990	3625	4x4	LTE B48	20	55340	3560	2x2	LTE B48	20	55538	3579.8	2x2	LTE B66	20	66786	2145	2x2	-	-	-	-	-	-	25.11	25.03
CA_13A-46A-(48C)-66A	LTE B13	10	23230	782	QPSK	1	0	5230	751	2x2	LTE B46	20	55990	3625	2x2	LTE B48	20	55340	3560	4x4	LTE B48	20	55538	3579.8	4x4	LTE B66	20	66786	2145	4x4	-	-	-	-	-	-	25.10	25.03
CA_13A-46A-48C-(66A)	LTE B13	10	23230	782	QPSK	1	0	5230	751	2x2	LTE B46	20	55990	3625	2x2	LTE B48	20	55340	3560	2x2	LTE B48	20	55538	3579.8	2x2	LTE B66	20	66786	2145	4x4	-	-	-	-	-	-	25.06	25.03
CA_13A-(46A)-(48C)-66A	LTE B13	10	23230	782	QPSK	1	0	5230	751	2x2	LTE B46	20	55990	3625	4x4	LTE B48	20	55840	3690	4x4	LTE B48	20	56442	3670.2	4x4	LTE B66	20	66786	2145	2x2	-	-	-	-	-	-	25.12	25.03
CA_13A-(46A)-48C-(66A)	LTE B13	10	23230	782	QPSK	1	0	5230	751	2x2	LTE B46	20	55990	3625	4x4	LTE B48	20	55340	3560	2x2	LTE B48	20	55538	3579.8	2x2	LTE B66	20	66786	2145	4x4	-	-	-	-	-	-	25.10	25.03
CA_13A-48A-48C-(66A)	LTE B13	10	23230	782	QPSK	1	0	5230	751	2x2	LTE B46	20	55990	3625	2x2	LTE B48	20	55340	3560	4x4	LTE B48	20	55538	3579.8	4x4	LTE B66	20	66786	2145	4x4	-	-	-	-	-	-	25.10	25.03
CA_13A-(48A)-(48C)-66A	LTE B13	10	23230	782	QPSK	1	0	5230	751	2x2	LTE B46	20	55990	3625	4x4	LTE B48	20	55340	3560	4x4	LTE B48	20	55538	3579.8	4x4	LTE B66	20	66786	2145	4x4	-	-	-	-	-	-	25.08	25.03
CA_13A-(46A)-48C-(66A)	LTE B13	10	23230	782	QPSK	1	0	5230	751	2x2	LTE B46	20	55990	3625	4x4	LTE B48	20	55340	3560	2x2	LTE B48	20	55538	3579.8	2x2	LTE B66	20	66786	2145	4x4	-	-	-	-	-	-	25.08	25.03
CA_13A-48A-(48C)-(66A)	LTE B13	10	23230	782	QPSK	1	0	5230	751	2x2	LTE B46	20	55990	3625	2x2	LTE B48	20	55340	3560	4x4	LTE B48	20	55538	3579.8	4x4	LTE B66	20	66786	2145	4x4	-	-	-	-	-	-	25.10	25.03
CA_13A-(46A)-(48C)-(66A)	LTE B13	10	23230	782	QPSK	1	0	5230	751	2x2	LTE B46	20	55990	3625	4x4	LTE B48	20	55340	3560	4x4	LTE B48	20	55538	3579.8	4x4	LTE B66	20	66786	2145	4x4	-	-	-	-	-	-	25.08	25.03
CA_13A-(46A)-48D	LTE B13	10	23230	782	QPSK	1	0	5230	751	2x2	LTE B46	20	55990	3625	4x4	LTE B48	20	55340	3560	2x2	LTE B48	20	55538	3579.8	2x2	LTE B48	20	55736	3598.6	2x2	-	-	-	-	-	-	25.13	25.03
CA_13A-46A-(48D)	LTE B13	10	23230	782	QPSK	1	0	5230	751	2x2	LTE B46	20	55990	3625	2x2	LTE B48	20	55340	3560	4x4	LTE B48	20	55538	3579.8	4x4	LTE B48	20	55736	3598.6	4x4	-	-	-	-	-	-	25.09	25.03
CA_13A-(46A)-48D	LTE B13	10	23230	782	QPSK	1	0	5230	751	2x2	LTE B46	20	55990	3625	4x4	LTE B48	20	55340	3560	4x4	LTE B48	20	55538	3579.8	4x4	LTE B48	20	55736	3598.6	4x4	-	-	-	-	-	-	25.07	25.03
CA_13A-48C1-48C	LTE B13	10	23230	782	QPSK	1	0	5230	751	2x2	LTE B46	20	55990	3625	4x4	LTE B48	20	56188	3644.8	4x4	LTE B48	20	55340	3560	2x2	LTE B48	20	55538	3579.8	2x2	-	-	-	-	-	-	24.97	25.03
CA_13A-(48C1)-(48C)	LTE B13	10	23230	782	QPSK	1	0	5230	751	2x2	LTE B46	20	55990	3625	4x4	LTE B48	20	56188	3644.8	4x4	LTE B48	20	55340	3560	4x4	LTE B48	20	55538	3579.8	4x4	-	-	-	-	-	-	24.99	25.03
CA_13A-(48C)-48D	LTE B13	10	23230	782	QPSK	1	0	5230	751	2x2	LTE B46	20	55990	3625	4x4	LTE B48	20	56188	3644.8	4x4	LTE B48	20	55538	3579.8	2x2	LTE B48	20	55736	3598.6	2x2	-	-	-	-	-	-	25.02	25.03
CA_13A-48D-(66A)	LTE B13	10	23230	782	QPSK	1	0	5230	751	2x2	LTE B46	20	55990	3625	2x2	LTE B48	20	56188	3644.8	2x2	LTE B48	20	56388	3664.6	2x2	LTE B66	20	66786	2145	4x4	-	-	-	-	-	-	25.04	25.03
CA_13A-(46A)-(48D)-(66A)	LTE B13	10	23230	782	QPSK	1	0	5230	751	2x2	LTE B46	20	55990	3625	4x4	LTE B48	20	56188	3644.8	2x2	LTE B48	20	56388	3664.6	4x4	LTE B66	20	66786	2145	4x4	-	-	-	-	-	-	25.06	25.03
CA_13A-(46C)-66B	LTE B13	10	23230	782	QPSK	1	0	5230	751	2x2	LTE B46	20	55990	3625	4x4	LTE B48	20	56188	3644.8	4x4	LTE B66	15	66786	2145	2x2	LTE B66	5	66879	2154.3	2x2	-	-	-	-	-	-	25.05	25.03
CA_13A-46C-(66B)	LTE B13	10	23230	782	QPSK	1	0	5230	751	2x2	LTE B46	20	55990	3625	2x2	LTE B48	20	56188	3644.8	2x2	LTE B66	15	66786	2145	4x4	LTE B66	5	66879	2154.3	2x2	-	-	-	-	-	-	25.03	25.03
CA_13A-(46C)-(66B)	LTE B13	10	23230	782	QPSK	1	0	5230	751	2x2	LTE B46	20	55990	3625	4x4	LTE B48	20	56188	3644.8	4x4	LTE B66	15	66786	2145	4x4	LTE B66	5	66879	2154.3	4x4	-	-	-	-	-	-	24.98	25.03
CA_(2A)-(2A)-13A-(46C)-66C	LTE B13	10	23230	782	QPSK	1	0	5230	751	2x2	LTE B2	20	900	1960	2x2	LTE B46	20	50665	5537.5	2x2	LTE B46	20	50467	5517.7	2x2	LTE B66	20	53863	5557.3	2x2	LTE B66	20	66786	2145	2x2	24.98	25.03
CA_(2A)-13A-(46C)-(66A)	LTE B13	10	23230	782	QPSK	1	0	5230	751	2x2	LTE B2	20	900	1960	2x2	LTE B46	20	50665	5537.5	2x2	LTE B46	20	50467	5517.7	2x2	LTE B66	20	53863	5557.3	2x2	LTE B66	20	66786	2145	4x4	24.98	25.03
CA_(2A)-13A-46D-(66A)	LTE B13	10	23230	782	QPSK	1	0	5230	751	2x2

1.4.5 LTE Band 14 as PCC

Table 16
Maximum Output Powers

	PCC										SCC 1					SCC 2					SCC 3					SCC 4					Power	
Combination	PCC Band	PCC BW [MHz]	PCC (UL) Ch.	PCC (UL) Freq. [MHz]	Mod.	PCC UL# RB	PCC UL RB Offset	PCC (DL) Ch.	PCC (DL) Freq. [MHz]	DL Ant. Config.	SCC Band	SCC BW [MHz]	SCC (DL) Ch.	SCC (DL) Freq. [MHz]	DL Ant. Config.	SCC Band	SCC BW [MHz]	SCC (DL) Ch.	SCC (DL) Freq. [MHz]	DL Ant. Config.	SCC Band	SCC BW [MHz]	SCC (DL) Ch.	SCC (DL) Freq. [MHz]	DL Ant. Config.	SCC Band	SCC BW [MHz]	SCC (DL) Ch.	SCC (DL) Freq. [MHz]	DL Ant. Config.	LTE Tx.Power with DL CA Enabled (dBm)	LTE Single Carrier Tx Power (dBm)
CA_[2A]-2A-14A-30A-66A	LTE B14	10	23330	793	QPSK	1	0	5330	763	2x2	LTE B2	20	900	1960	4x4	LTE B2	20	700	1940	2x2	LTE B30	10	9820	2355	2x2	LTE B66	20	66786	2145	2x2	24.96	25.05
CA_2A-2A-14A-[30A]-66A	LTE B14	10	23330	793	QPSK	1	0	5330	763	2x2	LTE B2	20	900	1960	2x2	LTE B2	20	700	1940	2x2	LTE B30	10	9820	2355	4x4	LTE B66	20	66786	2145	2x2	25.05	25.05
CA_2A-2A-14A-30A-[66A]	LTE B14	10	23330	793	QPSK	1	0	5330	763	2x2	LTE B2	20	900	1960	2x2	LTE B2	20	700	1940	2x2	LTE B30	10	9820	2355	2x2	LTE B66	20	66786	2145	4x4	25.07	25.05
CA_[2A]-[2A]-14A-30A-66A	LTE B14	10	23330	793	QPSK	1	0	5330	763	2x2	LTE B2	20	900	1960	4x4	LTE B2	20	700	1940	4x4	LTE B30	10	9820	2355	2x2	LTE B66	20	66786	2145	2x2	25.03	25.05
CA_[2A]-2A-14A-[30A]-66A	LTE B14	10	23330	793	QPSK	1	0	5330	763	2x2	LTE B2	20	900	1960	4x4	LTE B2	20	700	1940	2x2	LTE B30	10	9820	2355	4x4	LTE B66	20	66786	2145	2x2	25.14	25.05
CA_[2A]-2A-14A-30A-[66A]	LTE B14	10	23330	793	QPSK	1	0	5330	763	2x2	LTE B2	20	900	1960	4x4	LTE B2	20	700	1940	2x2	LTE B30	10	9820	2355	2x2	LTE B66	20	66786	2145	4x4	25.03	25.05
CA_2A-2A-14A-[30A]-[66A]	LTE B14	10	23330	793	QPSK	1	0	5330	763	2x2	LTE B2	20	900	1960	2x2	LTE B2	20	700	1940	2x2	LTE B30	10	9820	2355	4x4	LTE B66	20	66786	2145	4x4	24.98	25.05
CA_[2A]-[2A]-14A-[30A]-66A	LTE B14	10	23330	793	QPSK	1	0	5330	763	2x2	LTE B2	20	900	1960	4x4	LTE B2	20	700	1940	4x4	LTE B30	10	9820	2355	4x4	LTE B66	20	66786	2145	2x2	25.13	25.05
CA_[2A]-[2A]-14A-30A-[66A]	LTE B14	10	23330	793	QPSK	1	0	5330	763	2x2	LTE B2	20	900	1960	4x4	LTE B2	20	700	1940	4x4	LTE B30	10	9820	2355	2x2	LTE B66	20	66786	2145	4x4	25.01	25.05
CA_[2A]-2A-14A-[30A]-[66A]	LTE B14	10	23330	793	QPSK	1	0	5330	763	2x2	LTE B2	20	900	1960	4x4	LTE B2	20	700	1940	2x2	LTE B30	10	9820	2355	4x4	LTE B66	20	66786	2145	4x4	24.99	25.05
CA_[2A]-[2A]-14A-[30A]-[66A]	LTE B14	10	23330	793	QPSK	1	0	5330	763	2x2	LTE B2	20	900	1960	4x4	LTE B2	20	700	1940	4x4	LTE B30	10	9820	2355	4x4	LTE B66	20	66786	2145	4x4	25.08	25.05
CA_[2A]-2A-14A-66A-66A	LTE B14	10	23330	793	QPSK	1	0	5330	763	2x2	LTE B2	20	900	1960	4x4	LTE B2	20	700	1940	2x2	LTE B66	20	66786	2145	2x2	LTE B66	20	67236	2190	2x2	24.94	25.05
CA_2A-2A-14A-[66A]-66A	LTE B14	10	23330	793	QPSK	1	0	5330	763	2x2	LTE B2	20	900	1960	2x2	LTE B2	20	700	1940	2x2	LTE B66	20	66786	2145	4x4	LTE B66	20	67236	2190	2x2	25.10	25.05
CA_[2A]-[2A]-14A-66A-66A	LTE B14	10	23330	793	QPSK	1	0	5330	763	2x2	LTE B2	20	900	1960	4x4	LTE B2	20	700	1940	4x4	LTE B66	20	66786	2145	2x2	LTE B66	20	67236	2190	2x2	25.03	25.05
CA_[2A]-2A-14A-[66A]-66A	LTE B14	10	23330	793	QPSK	1	0	5330	763	2x2	LTE B2	20	900	1960	4x4	LTE B2	20	700	1940	2x2	LTE B66	20	66786	2145	4x4	LTE B66	20	67236	2190	2x2	25.08	25.05
CA_2A-2A-14A-[66A]-[66A]	LTE B14	10	23330	793	QPSK	1	0	5330	763	2x2	LTE B2	20	900	1960	2x2	LTE B2	20	700	1940	2x2	LTE B66	20	66786	2145	4x4	LTE B66	20	67236	2190	4x4	25.13	25.05
CA_[2A]-[2A]-14A-[66A]-66A	LTE B14	10	23330	793	QPSK	1	0	5330	763	2x2	LTE B2	20	900	1960	4x4	LTE B2	20	700	1940	4x4	LTE B66	20	66786	2145	4x4	LTE B66	20	67236	2190	2x2	25.06	25.05
CA_[2A]-2A-14A-[66A]-[66A]	LTE B14	10	23330	793	QPSK	1	0	5330	763	2x2	LTE B2	20	900	1960	4x4	LTE B2	20	700	1940	2x2	LTE B66	20	66786	2145	4x4	LTE B66	20	67236	2190	4x4	25.21	25.05
CA_[2A]-[2A]-14A-[66A]-[66A]	LTE B14	10	23330	793	QPSK	1	0	5330	763	2x2	LTE B2	20	900	1960	4x4	LTE B2	20	700	1940	4x4	LTE B66	20	66786	2145	4x4	LTE B66	20	67236	2190	4x4	25.08	25.05
CA_[2A]-14A-30A-66A-66A	LTE B14	10	23330	793	QPSK	1	0	5330	763	2x2	LTE B2	20	900	1960	4x4	LTE B30	10	9820	2355	2x2	LTE B66	20	66786	2145	2x2	LTE B66	20	67236	2190	2x2	25.02	25.05
CA_2A-14A-[30A]-66A-66A	LTE B14	10	23330	793	QPSK	1	0	5330	763	2x2	LTE B2	20	900	1960	2x2	LTE B30	10	9820	2355	4x4	LTE B66	20	66786	2145	2x2	LTE B66	20	67236	2190	2x2	25.04	25.05
CA_2A-14A-30A-[66A]-66A	LTE B14	10	23330	793	QPSK	1	0	5330	763	2x2	LTE B2	20	900	1960	2x2	LTE B30	10	9820	2355	2x2	LTE B66	20	66786	2145	4x4	LTE B66	20	67236	2190	2x2	24.95	25.05
CA_[2A]-14A-[30A]-66A-66A	LTE B14	10	23330	793	QPSK	1	0	5330	763	2x2	LTE B2	20	900	1960	4x4	LTE B30	10	9820	2355	4x4	LTE B66	20	66786	2145	2x2	LTE B66	20	67236	2190	2x2	25.06	25.05
CA_[2A]-14A-30A-[66A]-66A	LTE B14	10	23330	793	QPSK	1	0	5330	763	2x2	LTE B2	20	900	1960	4x4	LTE B30	10	9820	2355	2x2	LTE B66	20	66786	2145	4x4	LTE B66	20	67236	2190	2x2	25.05	25.05
CA_2A-14A-[30A]-[66A]-66A	LTE B14	10	23330	793	QPSK	1	0	5330	763	2x2	LTE B2	20	900	1960	2x2	LTE B30	10	9820	2355	4x4	LTE B66	20	66786	2145	4x4	LTE B66	20	67236	2190	2x2	25.08	25.05
CA_2A-14A-30A-[66A]-[66A]	LTE B14	10	23330	793	QPSK	1	0	5330	763	2x2	LTE B2	20	900	1960	2x2	LTE B30	10	9820	2355	2x2	LTE B66	20	66786	2145	4x4	LTE B66	20	67236	2190	4x4	25.00	25.05
CA_[2A]-14A-[30A]-[66A]-66A	LTE B14	10	23330	793	QPSK	1	0	5330	763	2x2	LTE B2	20	900	1960	4x4	LTE B30	10	9820	2355	4x4	LTE B66	20	66786	2145	4x4	LTE B66	20	67236	2190	4x4	25.10	25.05

1.4.6 LTE Band 26 as PCC

Table 17
Maximum Output Powers

	PCC										SCC 1					SCC 2					SCC 3					Power	
Combination	PCC Band	PCC BW [MHz]	PCC (UL) Ch.	PCC (UL) Freq. [MHz]	Mod.	PCC UL# RB	PCC UL RB Offset	PCC (DL) Ch.	PCC (DL) Freq. [MHz]	DL Ant. Config.	SCC Band	SCC BW [MHz]	SCC (DL) Ch.	SCC (DL) Freq. [MHz]	DL Ant. Config.	SCC Band	SCC BW [MHz]	SCC (DL) Ch.	SCC (DL) Freq. [MHz]	DL Ant. Config.	SCC Band	SCC BW [MHz]	SCC (DL) Ch.	SCC (DL) Freq. [MHz]	DL Ant. Config.	LTE Tx.Power with DL CA Enabled (dBm)	LTE Single Carrier Tx Power (dBm)
CA_[25A]-25A-26A	LTE B26	3	26865	831.5	QPSK	1	14	8865	876.5	2x2	LTE B25	20	8365	1962.5	4x4	LTE B25	20	8590	1985	2x2	-	-	-	-	-	25.09	25.16
CA_[25A]-[25A]-26A	LTE B26	3	26865	831.5	QPSK	1	14	8865	876.5	2x2	LTE B25	20	8365	1962.5	4x4	LTE B25	20	8590	1985	4x4	-	-	-	-	-	25.14	25.16
CA_[25A]-26A-41A	LTE B26	10	26865	831.5	QPSK	1	0	8865	876.5	2x2	LTE B25	20	8365	1962.5	4x4	LTE B41	20	40620	2593	2x2	-	-	-	-	-	25.12	25.20
CA_25A-26A-[41A]	LTE B26	10	26865	831.5	QPSK	1	0	8865	876.5	2x2	LTE B25	20	8365	1962.5	2x2	LTE B41	20	40620	2593	4x4	-	-	-	-	-	25.17	25.20
CA_[25A]-26A-[41A]	LTE B26	10	26865	831.5	QPSK	1	0	8865	876.5	2x2	LTE B25	20	8365	1962.5	4x4	LTE B41	20	40620	2593	4x4	-	-	-	-	-	25.14	25.20
CA_26A-[41C]	LTE B26	10	26865	831.5	QPSK	1	0	8865	876.5	2x2	LTE B41	20	40620	2593	4x4	LTE B41	20	40422	2573.2	4x4	-	-	-	-	-	25.14	25.20
CA_[25A]-26A-41C	LTE B26	10	26865	831.5	QPSK	1	0	8865	876.5	2x2	LTE B25	20	8140	1940	4x4	LTE B41	20	40620	2593	2x2	LTE B41	20	40422	2573.2	2x2	25.04	25.20
CA_25A-26A-[41C]	LTE B26	10	26865	831.5	QPSK	1	0	8865	876.5	2x2	LTE B25	20	8140	1940	2x2	LTE B41	20	40620	2593	4x4	LTE B41	20	40422	2573.2	4x4	24.98	25.20
CA_[25A]-26A-[41C]	LTE B26	10	26865	831.5	QPSK	1	0	8865	876.5	2x2	LTE B25	20	8140	1940	4x4	LTE B41	20	40620	2593	4x4	LTE B41	20	40422	2573.2	4x4	25.00	25.20

© 2020 PCTEST

1.4.7 LTE Band 5 as PCC

Table 18
Maximum Output Powers

		PCC							SCC 1					SCC 2					SCC 3					SCC 4					SCC 5					Power	
Combination	PCC Band	PCC BW [MHz]	PCC (UL) Ch.	PCC (UL) Freq. [MHz]	Mod.	PCC UL# RB	PCC UL RB Offset	PCC (DL) Ch.	PCC (DL) Freq. [MHz]	DL Ant. Config.	SCC Band	SCC BW [MHz]	SCC (DL) Ch.	SCC (DL) Freq. [MHz]	DL Ant. Config.	SCC Band	SCC BW [MHz]	SCC (DL) Ch.	SCC (DL) Freq. [MHz]	DL Ant. Config.	SCC Band	SCC BW [MHz]	SCC (DL) Ch.	SCC (DL) Freq. [MHz]	DL Ant. Config.	SCC Band	SCC BW [MHz]	SCC (DL) Ch.	SCC (DL) Freq. [MHz]	DL Ant. Config.	SCC Band	SCC BW [MHz]	SCC (DL) Ch.	SCC (DL) Freq. [MHz]	DL Ant. Config.	LTE Tx.Power with DL CA Enabled (dBm)	LTE Single Carrier Tx Power (dBm)
CA_5A-[25A]	LTE B5	5	20525	836.5	QPSK	1	12	2525	881.5	2x2	LTE B25	20	8365	1962.5	4x4																					25.04	25.11
CA_[2A]-5A-46A	LTE B5	5	20525	836.5	QPSK	1	12	2525	881.5	2x2	LTE B2	20	900	1960	4x4	LTE B46	20	50665	5537.5	2x2																24.94	25.11
CA_5A-46A-[66A]	LTE B5	5	20525	836.5	QPSK	1	12	2525	881.5	2x2	LTE B46	20	50665	5537.5	2x2	LTE B66	20	66786	2145	4x4	-	-	-	-	-	-	-	-	-	-	-	-	-	-	-	24.97	25.11
CA_[2A]-2A-4A-5A	LTE B5	5	20525	836.5	QPSK	1	12	2525	881.5	2x2	LTE B2	20	900	1960	4x4	LTE B2	20	700	1940	2x2	LTE B4	20	2175	2132.5	2x2	-	-	-	-	-	-	-	-	-	-	25.07	25.11
CA_2A-2A-[4A]-5A	LTE B5	5	20525	836.5	QPSK	1	12	2525	881.5	2x2	LTE B2	20	900	1960	4x4	LTE B2	20	700	1940	2x2	LTE B4	20	2175	2132.5	2x2	-	-	-	-	-	-	-	-	-	-	25.11	25.11
CA_[2A]-[2A]-4A-5A	LTE B5	5	20525	836.5	QPSK	1	12	2525	881.5	2x2	LTE B2	20	900	1960	4x4	LTE B2	20	700	1940	4x4	LTE B4	20	2175	2132.5	2x2	-	-	-	-	-	-	-	-	-	-	25.08	25.11
CA_[2A]-[2A]-[4A]-5A	LTE B5	5	20525	836.5	QPSK	1	12	2525	881.5	2x2	LTE B2	20	900	1960	4x4	LTE B2	20	700	1940	2x2	LTE B4	20	2175	2132.5	4x4	-	-	-	-	-	-	-	-	-	-	24.99	25.11
CA_[2A]-[2A]-[4A]-5A	LTE B5	5	20525	836.5	QPSK	1	12	2525	881.5	2x2	LTE B2	20	900	1960	4x4	LTE B2	20	700	1940	4x4	LTE B4	20	2175	2132.5	4x4	-	-	-	-	-	-	-	-	-	-	25.03	25.11
CA_[2A]-4A-4A-5A	LTE B5	5	20525	836.5	QPSK	1	12	2525	881.5	2x2	LTE B2	20	900	1960	4x4	LTE B4	20	2175	2132.5	2x2	LTE B4	10	2150	2150	2x2	-	-	-	-	-	-	-	-	-	-	25.02	25.11
CA_2A-[4A]-4A-5A	LTE B5	5	20525	836.5	QPSK	1	12	2525	881.5	2x2	LTE B2	20	900	1960	4x4	LTE B4	20	2175	2132.5	4x4	LTE B4	10	2150	2150	2x2	-	-	-	-	-	-	-	-	-	-	25.08	25.11
CA_[2A]-[4A]-4A-5A	LTE B5	5	20525	836.5	QPSK	1	12	2525	881.5	2x2	LTE B2	20	900	1960	4x4	LTE B4	20	2175	2132.5	4x4	LTE B4	10	2150	2150	2x2	-	-	-	-	-	-	-	-	-	-	25.03	25.11
CA_2A-[4A]-[4A]-5A	LTE B5	5	20525	836.5	QPSK	1	12	2525	881.5	2x2	LTE B2	20	900	1960	4x4	LTE B4	20	2175	2132.5	4x4	LTE B4	10	2150	2150	4x4	-	-	-	-	-	-	-	-	-	-	25.09	25.11
[2A]-[4A]-[4A]-5A	LTE B5	5	20525	836.5	QPSK	1	12	2525	881.5	2x2	LTE B2	20	900	1960	4x4	LTE B4	20	2175	2132.5	4x4	LTE B4	10	2150	2150	4x4	-	-	-	-	-	-	-	-	-	-	25.07	25.11
[2A]-4A-5B	LTE B5	5	20525	836.5	QPSK	1	12	2525	881.5	2x2	LTE B5	10	2453	874.3	2x2	LTE B2	20	900	1960	4x4	LTE B4	20	2175	2132.5	2x2	-	-	-	-	-	-	-	-	-	-	25.11	25.11
[2A]-[4A]-5B	LTE B5	5	20525	836.5	QPSK	1	12	2525	881.5	2x2	LTE B5	10	2453	874.3	2x2	LTE B2	20	900	1960	4x4	LTE B4	20	2175	2132.5	4x4	-	-	-	-	-	-	-	-	-	-	25.10	25.11
[2A]-[4A]-4A-5B	LTE B5	5	20525	836.5	QPSK	1	12	2525	881.5	2x2	LTE B5	10	2453	874.3	2x2	LTE B2	20	900	1960	4x4	LTE B4	20	2175	2132.5	2x2	-	-	-	-	-	-	-	-	-	-	25.07	25.11
[2A]-[4A]-[4A]-5B	LTE B5	5	20525	836.5	QPSK	1	12	2525	881.5	2x2	LTE B5	10	2453	874.3	2x2	LTE B2	20	900	1960	4x4	LTE B4	20	2175	2132.5	4x4	-	-	-	-	-	-	-	-	-	-	25.06	25.11
CA_5A-5A-[66A]-66A	LTE B5	5	20525	836.5	QPSK	1	12	2525	881.5	2x2	LTE B5	5	2425	871.5	2x2	LTE B66	20	66786	2145	4x4	LTE B66	20	67236	2190	2x2	-	-	-	-	-	-	-	-	-	-	25.11	25.11
CA_5A-5A-[66A]-[66A]	LTE B5	5	20525	836.5	QPSK	1	12	2525	881.5	2x2	LTE B5	5	2425	871.5	2x2	LTE B66	20	66786	2145	4x4	LTE B66	20	67236	2190	4x4	-	-	-	-	-	-	-	-	-	-	25.10	25.11
CA_5A-5A-[66B]	LTE B5	5	20525	836.5	QPSK	1	12	2525	881.5	2x2	LTE B5	5	2425	871.5	2x2	LTE B66	15	66786	2145	4x4	LTE B66	5	66879	2154.3	4x4	-	-	-	-	-	-	-	-	-	-	25.08	25.11
CA_5A-5A-[66C]	LTE B5	5	20525	836.5	QPSK	1	12	2525	881.5	2x2	LTE B5	5	2425	871.5	2x2	LTE B66	20	66786	2145	4x4	LTE B66	20	66984	2164.8	4x4	-	-	-	-	-	-	-	-	-	-	25.04	25.11
CA_5A-46C-[66A]	LTE B5	5	20525	836.5	QPSK	1	12	2525	881.5	2x2	LTE B46	20	50665	5537.5	2x2	LTE B46	20	50467	5517.7	2x2	LTE B66	20	66786	2145	4x4	-	-	-	-	-	-	-	-	-	-	25.09	25.11
CA_[2A]-2A-5A-30A-66A	LTE B5	5	20525	836.5	QPSK	1	12	2525	881.5	2x2	LTE B2	20	900	1960	4x4	LTE B2	20	700	1940	2x2	LTE B30	10	9820	2355	2x2	LTE B66	20	66786	2145	2x2	-	-	-	-	-	-	25.06	25.11
CA_2A-2A-5A-[30A]-66A	LTE B5	5	20525	836.5	QPSK	1	12	2525	881.5	2x2	LTE B2	20	900	1960	2x2	LTE B2	20	700	1940	2x2	LTE B30	10	9820	2355	4x4	LTE B66	20	66786	2145	2x2	-	-	-	-	-	-	25.09	25.11
CA_2A-2A-5A-30A-[66A]	LTE B5	5	20525	836.5	QPSK	1	12	2525	881.5	2x2	LTE B2	20	900	1960	2x2	LTE B2	20	700	1940	4x4	LTE B30	10	9820	2355	2x2	LTE B66	20	66786	2145	4x4	-	-	-	-	-	-	25.08	25.11
CA_[2A]-2A-5A-30A-66A	LTE B5	5	20525	836.5	QPSK	1	12	2525	881.5	2x2	LTE B2	20	900	1960	4x4	LTE B2	20	700	1940	2x2	LTE B30	10	9820	2355	4x4	LTE B66	20	66786	2145	2x2	-	-	-	-	-	-	25.07	25.11
CA_2A-2A-5A-[30A]-66A	LTE B5	5	20525	836.5	QPSK	1	12	2525	881.5	2x2	LTE B2	20	900	1960	4x4	LTE B2	20	700	1940	4x4	LTE B30	10	9820	2355	2x2	LTE B66	20	66786	2145	4x4	-	-	-	-	-	-	25.11	25.11
CA_[2A]-2A-5A-[30A]-66A	LTE B5	5	20525	836.5	QPSK	1	12	2525	881.5	2x2	LTE B2	20	900	1960	4x4	LTE B2	20	700	1940	4x4	LTE B30	10	9820	2355	4x4	LTE B66	20	66786	2145	4x4	-	-	-	-	-	-	25.10	25.11
CA_[2A]-2A-5A-30A-[66A]	LTE B5	5	20525	836.5	QPSK	1	12	2525	881.5	2x2	LTE B2	20	900	1960	4x4	LTE B2	20	700	1940	4x4	LTE B30	10	9820	2355	4x4	LTE B66	20	66786	2145	4x4	-	-	-	-	-	-	25.09	25.11
CA_[2A]-2A-5A-[30A]-[66A]	LTE B5	5	20525	836.5	QPSK	1	12	2525	881.5	2x2	LTE B2	20	900	1960	4x4	LTE B2	20	700	1940	4x4	LTE B30	10	9820	2355	4x4	LTE B66	20	66786	2145	4x4	-	-	-	-	-	-	25.08	25.11
CA_[2A]-2A-5A-66A-66A	LTE B5	5	20525	836.5	QPSK	1	12	2525	881.5	2x2	LTE B2	20	900	1960	4x4	LTE B2	20	700	1940	2x2	LTE B66	20	66786	2145	2x2	LTE B66	20	67236	2190	2x2	-	-	-	-	-	-	25.10	25.11
CA_[2A]-2A-5A-[66A]-66A	LTE B5	5	20525	836.5	QPSK	1	12	2525	881.5	2x2	LTE B2	20	900	1960	4x4	LTE B2	20	700	1940	2x2	LTE B66	20	66786	2145	4x4	LTE B66	20	67236	2190	2x2	-	-	-	-	-	-	25.09	25.11
CA_[2A]-2A-5A-66A-[66A]	LTE B5	5	20525	836.5	QPSK	1	12	2525	881.5	2x2	LTE B2	20	900	1960	4x4	LTE B2	20	700	1940	2x2	LTE B66	20	66786	2145	2x2	LTE B66	20	67236	2190	4x4	-	-	-	-	-	-	25.08	25.11
CA_[2A]-2A-5A-[66A]-[66A]	LTE B5	5	20525	836.5	QPSK	1	12	2525	881.5	2x2	LTE B2	20	900	1960	4x4	LTE B2	20	700	1940	2x2	LTE B66	20	66786	2145	4x4	LTE B66	20	67236	2190	4x4	-	-	-	-	-	-	25.07	25.11
CA_[2A]-2A-5A-[66A]-66A	LTE B5	5	20525	836.5	QPSK	1	12	2525	881.5	2x2	LTE B2	20	900	1960	4x4	LTE B2	20	700	1940	4x4	LTE B66	20	66786	2145	2x2	LTE B66	20	67236	2190	4x4	-	-	-	-	-	-	25.11	25.11
CA_[2A]-2A-5A-[66A]-[66A]	LTE B5	5	20525	836.5	QPSK	1	12	2525	881.5	2x2	LTE B2	20	900	1960	4x4	LTE B2	20	700	1940	4x4	LTE B66	20	66786	2145	4x4	LTE B66	20	67236	2190	4x4	-	-	-	-	-	-	25.10	25.11
CA_[2A]-2A-5A-66B	LTE B5	5	20525	836.5	QPSK	1	12	2525	881.5	2x2	LTE B2	20	900	1960	4x4	LTE B2	20	700	1940	2x2	LTE B66	15	66786	2145	2x2	LTE B66	5	66879	2154.3	4x4	-	-	-	-	-	-	25.11	25.11
CA_2A-2A-5A-[66B]	LTE B5	5	20525	836.5	QPSK	1	12	2525	881.5	2x2	LTE B2	20	900	1960	4x4	LTE B2	20	700	1940	2x2	LTE B66	15	66786	2145	4x4	LTE B66	5	66879	2154.3	4x4	-	-	-	-	-	-	25.10	25.11
CA_[2A]-[2A]-5A-66B	LTE B5	5	20525	836.5	QPSK	1	12	2525	881.5	2x2	LTE B2	20	900	1960	4x4	LTE B2	20	700	1940	2x2	LTE B66	15	66786	2145	2x2	LTE B66	5	66879	2154.3	2x2	-	-	-	-	-	-	24.98	25.11
CA_[2A]-2A-5A-[66B]	LTE B5	5	20525	836.5	QPSK	1	12	2525	881.5	2x2	LTE B2	20	900	1960	4x4	LTE B2	20	700	1940	4x4	LTE B66	15	66786	2145	4x4	LTE B66	5	66879	2154.3	4x4	-	-	-	-	-	-	25.09	25.11
CA_[2A]-[2A]-5A-[66B]	LTE B5	5	20525	836.5	QPSK	1	12	2525	881.5	2x2	LTE B2	20	900	1960	4x4	LTE B2	20	700	1940	2x2	LTE B66	15	66786	2145	2x2	LTE B66	5	66879	2154.3	4x4	-	-	-	-	-	-	24.97	25.11
CA_[2A]-2A-5A-66C	LTE B5	5	20525	836.5	QPSK	1	12	2525	881.5	2x2	LTE B2	20	900	1960	4x4	LTE B2	20	700	1940	2x2	LTE B66	20	66786	2145	2x2	LTE B66	20	66984	2164.8	2x2	-	-	-	-	-	-	24.98	25.11
CA_[2A]-[2A]-5A-66C	LTE B5	5	20525	836.5	QPSK	1	12	2525	881.5	2x2	LTE B2	20	900	1960	4x4	LTE B2	20	700	1940	2x2	LTE B66	20	66786	2145	4x4	LTE B66	20	66984	2164.8	2x2	-	-	-	-	-	-	25.07	25.11
CA_[2A]-2A-5A-[66C]	LTE B5	5	20525	836.5	QPSK	1	12	2525	881.5	2x2	LTE B2	20	900	1960	4x4	LTE B2	20	700	1940	4x4	LTE B66	20	66786	2145	2x2	LTE B66	20	66984	2164.8	4x4	-	-	-	-	-	-	25.11	25.11
CA_[2A]-[2A]-5A-66C	LTE B5	5	20525	836.5	QPSK	1	12	2525	881.5	2x2	LTE B2	20	900	1960	4x4	LTE B2	20	700	1940	4x4	LTE B66	20	66786	2145	4x4	LTE B66	20	66984	2164.8	4x4	-	-	-	-	-	-	25.10	25.11
CA_[2A]-2A-5A-[66C]	LTE B5	5	20525	836.5	QPSK	1	12	2525	881.5	2x2	LTE B2	20	900	1960	4x4	LTE B2	20	700	1940	2x2	LTE B66	20	66786	2145	2x2	LTE B66	20	66984	2164.8	2x2	-	-	-	-	-	-	25.07	25.11
CA_[2A]-[2A]-5A-[66C]	LTE B5	5	20525	836.5	QPSK	1	12	2525	881.5	2x2	LTE B2	20	900	1960	4x4	LTE B2	20	700	1940	2x2	LTE B66	20	66786	2145	4x4	LTE B66	20	66984	2164.8	2x2	-	-	-	-	-	-	25.11	25.11
CA_[2A]-2A-5A-30A-66A-66A	LTE B5	5	20525	836.5	QPSK	1	12	2525	881.5	2x2	LTE B2	20	900	1960	2x2	LTE B30	10	9820	2355	2x2	LTE B66	20	66786	2145	2x2	LTE B66	20	67236	2190	2x2	-	-	-	-	-	-	25.06	25.11
CA_2A-5A-[30A]-66A-66A	LTE B5	5	20525	836.5	QPSK	1	12	2525	881.5	2x2	LTE B2	20	900	1960	2x2	LTE B30	10	9820	2355	4x4	LTE B66	20	66786	2145	2x2	LTE B66	20	67236	2190	2x2	-	-	-	-	-	-	25.08	25.11
CA_2A-5A-30A-[66A]-66A	LTE B5	5	20525	836.5	QPSK	1	12	2525	881.5	2x2	LTE B2	20	900	1960	2x2	LTE B30	10	9820	2355	2x2	LTE B66	20	66786	2145	4x4	LTE B66	20	67236	2190	2x2	-	-	-	-	-	-	25.07	25.11
CA_2A-5A-30A-[66A]-66A	LTE B5	5	20525	836.5	QPSK	1	12	2525	881.5	2x2	LTE B2	20	900	1960	2x2	LTE B30	10	9820	2355	4x4	LTE B66	20	66786	2145	2x2	LTE B66	20	67236	2190	4x4	-	-	-	-	-	-	25.11	25.11
CA_2A-5A-30A-[66A]-66A	LTE B5	5	20525	836.5	QPSK	1	12	2525	881.5	2x2	LTE B2	20	900	1960	2x2	LTE B30	10	9820	2355	4x4	LTE B66	20	66786	2145	4x4	LTE B66	20	67236	2190	4x4	-	-	-	-	-	-	25.10	25.11
CA_[2A]-5A-[30A]-66A-66A	LTE B5	5	20525	836.5	QPSK	1	12	2525	881.5	2x2	LTE B2	20	900	1960	2x2	LTE B30	10	9820	2355	2x2	LTE B66	20	66786	2145	2x2	LTE B66	20	67236	2190	2x2	-	-	-	-	-	-	25.10	25.11
CA_[2A]-5A-[30A]-66A-66A	LTE B5	5	20525	836.5	QPSK	1	12	2525	881.5	2x2	LTE B2	20	900	1960	2x2	LTE B30	10	9820	2355	4x4	LTE B66	20	66786	2145	2x2	LTE B66	20	67236	2190	2x2	-	-	-	-	-	-	25.25	25.11
CA_[2A]-5A-[30A]-[66A]-66A	LTE B5	5	20525	836.5	QPSK	1	12	2525	881.5	2x2	LTE B2	20	900	1960	2x2	LTE B30	10	9820	2355	4x4	LTE B66	20	66786	2145	4x4	LTE B66	20	67236	2190	2x2	-	-	-	-	-	-	25.07	25.11
CA_[2A]-5A-[30A]-66A-[66A]	LTE B5	5	20525	836.5	QPSK	1	12	2525	881.5	2x2	LTE B2	20	900	1960	2x2	LTE B30	10	9820	2355	2x2	LTE B66	20	66786	2145	2x2	LTE B66	20	67236	2190	4x4	-	-	-	-	-	-	25.04	25.11
CA_[2A]-5A-[30A]-66A-[66A]	LTE B5	5	20525	836.5	QPSK	1	12	2525	881.5	2x2	LTE B2	20	900	1960	2x2	LTE B30	10	9820	2355	4x4	LTE B66	20	66786	2145	4x4	LTE B66	20	67236	2190	4x4	-	-	-	-	-	-	25.07	25.11
CA_[2A]-5A-[30A]-[66A]-66A	LTE B5	5	20525	836.5	QPSK	1	12	2525	881.5	2x2	LTE B2	20	900	1960	2x2	LTE B30	10	9820	2355	2x2	LTE B66	20	66786	2145	2x2	LTE B66	20	67236	2190	4x4	-	-	-	-	-	-	25.06	25.11
CA_[2A]-5A-[30A]-[66A]-[66A]	LTE B5	5	20525	836.5	QPSK	1	12	2525	881.5	2x2	LTE B2	20	900	1960	2x2	LTE B30	10	9820	2355	4x4	LTE B66	20	66786	2145	4x4	LTE B66	20	67236	2190	4x4	-	-	-	-	-	-	25.05	25.11
CA_2A-5A-[30A]-66A-[66A]	LTE B5	5	20525	836.5	QPSK	1	12	2525	881.5	2x2	LTE B2	20	900	1960	2x2	LTE B30	10	9820	2355	2x2	LTE B66	20	66786	2145	2x2	LTE B66	20	67236	2190	4x4	-	-	-	-	-	-	25.11	25.11
CA_[2A]-2A-5A-[30A]-66A	LTE B5	5	20525	836.5	QPSK	1	12	2525	881.5	2x2	LTE B2	20	900	1960	2x2	LTE B30	10	9820	2355	4x4	LTE B66	20	66786	2145	4x4	LTE B66	20	67236	2190	4x4	-	-	-	-	-	-	25.10	25.11
CA_[2A]-2A-5A-[30A]-[66A]	LTE B5	5	20525	836.5	QPSK	1	12	2525	881.5	2x2	LTE B2	20	900	1960	2x2	LTE B30	10	9820	2355	2x2	LTE B66	20	66786	2145	2x2	LTE B66	20	67236	2190	4x4	-	-	-	-	-	-	25.09	25.11
CA_[2A]-2A-5A-[30A]-66A	LTE B5	5	20525	836.5	QPSK	1	12	2525	881.5	2x2	LTE B2	20	900	1960	2x2	LTE B30	10	9820	2355	4x4	LTE B66	20	66786	2145	4x4	LTE B66	20	67236	2190	4x4	-	-	-	-	-	-	25.08	25.11
CA_[2A]-2A-5A-[30A]-[66A]	LTE B5	5	20525	836.5	QPSK	1	12	2525	881.5	2x2	LTE B2	20	900	1960	2x2	LTE B30	10	9820	2355	4x4	LTE B66	20	66786	2145	4x4	LTE B66	20	67236	2190	4x4	-	-	-	-	-	-	25.07	25.11
CA_[2A]-2A-5A-[30A]-[66A]	LTE B5	5	20525	836.5	QPSK	1	12	2525	881.5	2x2	LTE B2	20	900	1960	2x2	LTE B30	10	9820	2355	4x4	LTE B66	20	66786	2145	4x4	LTE B66	20	67236	2190	4x4	-	-	-	-	-	-	25.11	25.11
CA_[2A]-5A-[30A]-66A	LTE B5	5	20525	836.5	QPSK	1	12	2525	881.5	2x2	LTE B2	20	900	1960	2x2	LTE B30	10	9820	2355	2x2	LTE B66	20	66786	2145	2x2	LTE B66	20	67236	2190	4x4	-	-	-	-	-	-	25.10	25.11
CA_[2A]-5A-[30A]-[66A]	LTE B5	5	20525	836.5	QPSK	1	12	2525	881.5	2x2	LTE B2	20	900	1960	2x2	LTE B30	10	9820	2355	4x4	LTE B66	20	66786	2145	4x4	LTE B66	20	67236	2190	4x4	-	-	-	-	-	-	25.09	25.11
CA_[2A]-5A-[30A]-[66A]-66A	LTE B5	5	20525	836.5	QPSK	1	12	2525	881.5	2x2	LTE B2	20	900	1960	2x2	LTE B30	10	9820	2355	2x2	LTE B66	20	66786	2145	2x2	LTE B66	20	67236	2190	4x4	-	-	-	-	-	-	25.08	25.11
CA_[2A]-5A-[30A]-[66A]-[66A]	LTE B5	5	20525	836.5	QPSK	1	12	2525	881.5	2x2	LTE B2	20	900	1960	2x2	LTE B30	10	9820	2355	4x4	LTE B66	20	66786	2145	4x4	LTE B66	20	67236	2190	4x4	-	-	-	-	-	-	25.07	25.11
CA_5A-46A-[66A]	LTE B5	5	20525	836.5	QPSK	1	12	2525	881.5	2x2	LTE B46	20	50665	5537.5	2x2	LTE B46	20	50467	5517.7	2x2	LTE B66	20	66786	2145	2x2	LTE B66	20	67236	2190	2x2	-	-	-	-	-	-	25.11	25.11
CA_[2A]-5A-46D-66A	LTE B5	5	20525	836.5	QPSK	1	12	2525	881.5	2x2	LTE B2	20	900	1960	4x4	LTE B46	20	50665	5537.5	2x2	LTE B46	20	50467	5517.7	2x2	LTE B66	20	66786	2145	2x2	-	-	-	-	-	-	25.03	25.11
CA_[2A]-5A-46D-[66A]	LTE B5	5	20525	836.5	QPSK	1	12	2525	881.5	2x2	LTE B2	20	900	1960	2x2	LTE B46	20	50665	5537.5	2x2	LTE B46	20	50467	5517.7	2x2	LTE B66	20	66786	2145	4x4	-	-	-	-	-	-	25.09	25.11
CA_[2A]-5A-46D-[66A]	LTE B5	5	20525	836.5	QPSK	1	12	2525	881.5	2x2	LTE B2	20	900	1960	4x4	LTE B46	20	50665	5537.5	2x2	LTE B46	20	50467	5517.7	2x2	LTE B66	20	66786	2145	4x4	-	-	-	-	-	-	25.11	25.11
CA_[2A]-5A-46D-[66A]-66A	LTE B5	5	20525	836.5	QPSK	1	12	2525	881.5	2x2	LTE B2	20	900	1960	4x4	LTE B46	20	50665	5537.5	2x2	LTE B46	20	50467	5517.7	2x2	LTE B66	20	50863	5557.3	2x2	LTE B66	20	66786	2145	4x4	-	-	25.06	25.11
CA_5A-46D-[66A]-66A	LTE B5	5	20525	836.5	QPSK	1	12	2525	881.5	2x2	LTE B46	20	50665	5537.5	2x2	LTE B46	20	50467	5517.7	2x2	LTE B66	20	50863	5557.3	2x2	LTE B66	20	66786	2145	4x4	-	-	-	-	-	-	24.95	25.11
CA_5A-46D-[66A]-[66A]	LTE B5	5	20525	836.5	QPSK	1	12	2525	881.5	2x2	LTE B46	20	50665	5537.5	2x2	LTE B46	20	50467	5517.7	2x2	LTE B66	20	50863	5557.3	2x2	LTE B66	20	66786	2145	4x4	-	-	-	-	-	-	24.98	25.11
CA_5A-46E-[66A]	LTE B5	5	20525	836.5	QPSK	1	12	2525	881.5	2x2	LTE B46	20	50665	5537.5	2x2	LTE B46	20	50467	5517.7	2x2	LTE B66	20	50863	5557.3	2x2	LTE B66	20	50269	5497.9	2x2	LTE B66	20	66786	2145	4x4	-	-	24.98	25.11

1.4.8 LTE Band 66 as PCC

Table 19
Maximum Output Powers

	PCC										SCC 1					SCC 2					SCC 3					Power	
Combination	PCC Band	PCC BW [MHz]	PCC [UL] Ch.	PCC [UL] Freq. [MHz]	Mod.	PCC UL# RB	PCC UL RB Offset	PCC [DL] Ch.	PCC [DL] Freq. [MHz]	DL Ant. Config.	SCC Band	SCC BW [MHz]	SCC [DL] Ch.	SCC [DL] Freq. [MHz]	DL Ant. Config.	SCC Band	SCC BW [MHz]	SCC [DL] Ch.	SCC [DL] Freq. [MHz]	DL Ant. Config.	SCC Band	SCC BW [MHz]	SCC [DL] Ch.	SCC [DL] Freq. [MHz]	DL Ant. Config.	LTE Tx.Power with DL CA Enabled (dBm)	LTE Single Carrier Tx Power (dBm)
CA_[2A]-66A	LTE B66	15	132222	1745	QPSK	1	36	66786	2145	2x2	LTE B2	20	900	1960	4x4	-	-	-	-	-	-	-	-	-	-	23.13	23.28
CA_2A-[66A]	LTE B66	15	132222	1745	QPSK	1	36	66786	2145	4x4	LTE B2	20	900	1960	2x2	-	-	-	-	-	-	-	-	-	-	23.08	23.28
CA_[2A]-[66A]	LTE B66	15	132222	1745	QPSK	1	36	66786	2145	4x4	LTE B2	20	900	1960	4x4	-	-	-	-	-	-	-	-	-	-	23.10	23.28
CA_12A-[66A] (1)	LTE B66	3	132222	1745	QPSK	1	0	66786	2145	4x4	LTE B12	10	5095	737.5	2x2	-	-	-	-	-	-	-	-	-	-	23.26	23.29
CA_12A-[66A] (2)	LTE B66	15	132222	1745	QPSK	1	36	66786	2145	4x4	LTE B12	10	5095	737.5	2x2	-	-	-	-	-	-	-	-	-	-	23.10	23.28
CA_5A-46A-[66A]	LTE B66	15	132222	1745	QPSK	1	36	66786	2145	4x4	LTE B5	10	2525	881.5	2x2	LTE B46	20	50665	5537.5	2x2	-	-	-	-	-	23.15	23.28
CA_13A-46A-[66A]	LTE B66	15	132222	1745	QPSK	1	36	66786	2145	4x4	LTE B13	10	5230	751	2x2	LTE B46	20	50665	5537.5	2x2	-	-	-	-	-	23.11	23.28
CA_46A-[66A]-66A	LTE B66	15	132222	1745	QPSK	1	36	66786	2145	4x4	LTE B66	20	67236	2190	2x2	LTE B46	20	50665	5537.5	2x2	-	-	-	-	-	23.13	23.28
CA_46A-66A-[66A]	LTE B66	15	132222	1745	QPSK	1	36	66786	2145	2x2	LTE B66	20	67236	2190	4x4	LTE B46	20	50665	5537.5	2x2	-	-	-	-	-	23.26	23.28
CA_46A-[66A]-[66A]	LTE B66	15	132222	1745	QPSK	1	36	66786	2145	4x4	LTE B66	20	67236	2190	4x4	LTE B46	20	50665	5537.5	2x2	-	-	-	-	-	23.16	23.28
CA_[66A]-66C	LTE B66	15	132222	1745	QPSK	1	36	66786	2145	4x4	LTE B66	20	67038	2170.2	2x2	LTE B66	20	67236	2190	2x2	-	-	-	-	-	23.15	23.28
CA_66C-[66A]	LTE B66	15	132222	1745	QPSK	1	36	66786	2145	2x2	LTE B66	20	66615	2127.9	2x2	LTE B66	20	67236	2190	4x4	-	-	-	-	-	23.29	23.28
CA_66A-[66C]	LTE B66	15	132222	1745	QPSK	1	36	66786	2145	2x2	LTE B66	20	67038	2170.2	4x4	LTE B66	20	67236	2190	4x4	-	-	-	-	-	23.25	23.28
CA_[66C]-66A	LTE B66	15	132222	1745	QPSK	1	36	66786	2145	4x4	LTE B66	20	66615	2127.9	4x4	LTE B66	20	67236	2190	2x2	-	-	-	-	-	23.21	23.28
CA_[66A]-[66C]	LTE B66	15	132222	1745	QPSK	1	36	66786	2145	4x4	LTE B66	20	67038	2170.2	4x4	LTE B66	20	67236	2190	4x4	-	-	-	-	-	23.28	23.28
CA_[66C]-[66A]	LTE B66	15	132222	1745	QPSK	1	36	66786	2145	4x4	LTE B66	20	66615	2127.9	4x4	LTE B66	20	67236	2190	4x4	-	-	-	-	-	23.23	23.28
CA_[2A]-2A-66A-71A	LTE B66	15	132222	1745	QPSK	1	36	66786	2145	2x2	LTE B2	20	900	1960	4x4	LTE B2	20	700	1940	2x2	LTE B71	20	68761	634.5	2x2	23.32	23.28
CA_2A-2A-[66A]-71A	LTE B66	15	132222	1745	QPSK	1	36	66786	2145	4x4	LTE B2	20	900	1960	2x2	LTE B2	20	700	1940	2x2	LTE B71	20	68761	634.5	2x2	23.13	23.28
CA_[2A]-[2A]-66A-71A	LTE B66	15	132222	1745	QPSK	1	36	66786	2145	2x2	LTE B2	20	900	1960	4x4	LTE B2	20	700	1940	4x4	LTE B71	20	68761	634.5	2x2	23.34	23.28
CA_[2A]-2A-[66A]-71A	LTE B66	15	132222	1745	QPSK	1	36	66786	2145	4x4	LTE B2	20	900	1960	4x4	LTE B2	20	700	1940	2x2	LTE B71	20	68761	634.5	2x2	23.15	23.28
CA_[2A]-[2A]-[66A]-71A	LTE B66	15	132222	1745	QPSK	1	36	66786	2145	4x4	LTE B2	20	900	1960	4x4	LTE B2	20	700	1940	4x4	LTE B71	20	68761	634.5	2x2	23.10	23.28
CA_[2A]-12A-66C	LTE B66	15	132222	1745	QPSK	1	36	66786	2145	2x2	LTE B66	20	66615	2127.9	2x2	LTE B2	20	900	1960	4x4	LTE B12	10	5095	737.5	2x2	23.11	23.28
CA_2A-12A-[66C]	LTE B66	15	132222	1745	QPSK	1	36	66786	2145	4x4	LTE B66	20	66615	2127.9	4x4	LTE B2	20	900	1960	4x4	LTE B12	10	5095	737.5	2x2	23.20	23.28
CA_[2A]-12A-[66C]	LTE B66	15	132222	1745	QPSK	1	36	66786	2145	4x4	LTE B66	20	66615	2127.9	4x4	LTE B2	20	900	1960	4x4	LTE B12	10	5095	737.5	2x2	23.11	23.28
CA_[2A]-13A-66C	LTE B66	15	132222	1745	QPSK	1	36	66786	2145	2x2	LTE B66	20	66615	2127.9	2x2	LTE B2	20	900	1960	4x4	LTE B13	10	5230	751	2x2	23.18	23.28
CA_2A-13A-[66C]	LTE B66	15	132222	1745	QPSK	1	36	66786	2145	4x4	LTE B66	20	66615	2127.9	4x4	LTE B2	20	900	1960	2x2	LTE B13	10	5230	751	2x2	23.24	23.28
CA_[2A]-13A-[66C]	LTE B66	15	132222	1745	QPSK	1	36	66786	2145	4x4	LTE B66	20	66615	2127.9	4x4	LTE B2	20	900	1960	4x4	LTE B13	10	5230	751	2x2	23.11	23.28
CA_[2A]-29A-30A-66A	LTE B66	15	132222	1745	QPSK	1	36	66786	2145	2x2	LTE B2	20	900	1960	4x4	LTE B29	10	9715	722.5	2x2	LTE B30	10	9820	2355	2x2	23.12	23.28
CA_2A-29A-[30A]-66A	LTE B66	15	132222	1745	QPSK	1	36	66786	2145	2x2	LTE B2	20	900	1960	2x2	LTE B29	10	9715	722.5	2x2	LTE B30	10	9820	2355	4x4	23.23	23.28
CA_2A-29A-30A-[66A]	LTE B66	15	132222	1745	QPSK	1	36	66786	2145	4x4	LTE B2	20	900	1960	2x2	LTE B29	10	9715	722.5	2x2	LTE B30	10	9820	2355	2x2	23.14	23.28
CA_[2A]-29A-[30A]-66A	LTE B66	15	132222	1745	QPSK	1	36	66786	2145	2x2	LTE B2	20	900	1960	4x4	LTE B29	10	9715	722.5	2x2	LTE B30	10	9820	2355	4x4	23.25	23.28
CA_[2A]-29A-30A-[66A]	LTE B66	15	132222	1745	QPSK	1	36	66786	2145	4x4	LTE B2	20	900	1960	4x4	LTE B29	10	9715	722.5	2x2	LTE B30	10	9820	2355	2x2	23.43	23.28
CA_2A-29A-[30A]-[66A]	LTE B66	15	132222	1745	QPSK	1	36	66786	2145	4x4	LTE B2	20	900	1960	2x2	LTE B29	10	9715	722.5	2x2	LTE B30	10	9820	2355	4x4	23.45	23.28
CA_[2A]-29A-[30A]-[66A]	LTE B66	15	132222	1745	QPSK	1	36	66786	2145	4x4	LTE B2	20	900	1960	4x4	LTE B29	10	9715	722.5	2x2	LTE B30	10	9820	2355	4x4	23.42	23.28
CA_[2A]-30A-[66A]-[66A]	LTE B66	15	132222	1745	QPSK	1	36	66786	2145	4x4	LTE B66	20	67236	2190	4x4	LTE B2	20	900	1960	4x4	LTE B30	10	9820	2355	2x2	23.23	23.28
CA_[2A]-46A-46A-66A	LTE B66	15	132222	1745	QPSK	1	36	66786	2145	2x2	LTE B2	20	900	1960	4x4	LTE B46	20	50665	5537.5	2x2	LTE B46	20	47090	5180	2x2	23.13	23.28
CA_2A-46A-46A-[66A]	LTE B66	15	132222	1745	QPSK	1	36	66786	2145	4x4	LTE B2	20	900	1960	2x2	LTE B46	20	50665	5537.5	2x2	LTE B46	20	47090	5180	2x2	23.02	23.28
CA_[2A]-46A-46A-[66A]	LTE B66	15	132222	1745	QPSK	1	36	66786	2145	4x4	LTE B2	20	900	1960	4x4	LTE B46	20	50665	5537.5	2x2	LTE B46	20	47090	5180	2x2	23.08	23.28
CA_[2A]-46A-48A-66A	LTE B66	15	132222	1745	QPSK	1	36	66786	2145	2x2	LTE B2	20	900	1960	4x4	LTE B46	20	50665	5537.5	2x2	LTE B48	20	55990	3625	2x2	23.26	23.28
CA_2A-46A-[48A]-66A	LTE B66	15	132222	1745	QPSK	1	36	66786	2145	2x2	LTE B2	20	900	1960	2x2	LTE B46	20	50665	5537.5	2x2	LTE B48	20	55990	3625	4x4	23.22	23.28
CA_2A-46A-48A-[66A]	LTE B66	15	132222	1745	QPSK	1	36	66786	2145	4x4	LTE B2	20	900	1960	2x2	LTE B46	20	50665	5537.5	2x2	LTE B48	20	55990	3625	2x2	23.13	23.28
CA_[2A]-46A-[48A]-66A	LTE B66	15	132222	1745	QPSK	1	36	66786	2145	2x2	LTE B2	20	900	1960	4x4	LTE B46	20	50665	5537.5	2x2	LTE B48	20	55990	3625	4x4	23.30	23.28
CA_[2A]-46A-48A-[66A]	LTE B66	15	132222	1745	QPSK	1	36	66786	2145	4x4	LTE B2	20	900	1960	4x4	LTE B46	20	50665	5537.5	2x2	LTE B48	20	55990	3625	2x2	23.07	23.28
CA_2A-46A-[48A]-[66A]	LTE B66	15	132222	1745	QPSK	1	36	66786	2145	4x4	LTE B2	20	900	1960	2x2	LTE B46	20	50665	5537.5	2x2	LTE B48	20	55990	3625	4x4	23.13	23.28
CA_[2A]-46A-[48A]-[66A]	LTE B66	15	132222	1745	QPSK	1	36	66786	2145	4x4	LTE B2	20	900	1960	4x4	LTE B46	20	50665	5537.5	2x2	LTE B48	20	55990	3625	4x4	23.15	23.28
CA_[2A]-66A-66A-71A	LTE B66	15	132222	1745	QPSK	1	36	66786	2145	2x2	LTE B66	20	67236	2190	2x2	LTE B2	20	900	1960	4x4	LTE B71	20	68761	634.5	2x2	23.17	23.28
CA_2A-66A-[66A]-71A	LTE B66	15	132222	1745	QPSK	1	36	66786	2145	2x2	LTE B66	20	67236	2190	4x4	LTE B2	20	900	1960	2x2	LTE B71	20	68761	634.5	2x2	23.28	23.28
CA_2A-[66A]-66A-71A	LTE B66	15	132222	1745	QPSK	1	36	66786	2145	4x4	LTE B66	20	67236	2190	2x2	LTE B2	20	900	1960	2x2	LTE B71	20	68761	634.5	2x2	23.27	23.28
CA_[2A]-66A-[66A]-71A	LTE B66	15	132222	1745	QPSK	1	36	66786	2145	2x2	LTE B66	20	67236	2190	4x4	LTE B2	20	900	1960	4x4	LTE B71	20	68761	634.5	2x2	23.17	23.28
CA_[2A]-[66A]-66A-71A	LTE B66	15	132222	1745	QPSK	1	36	66786	2145	4x4	LTE B66	20	67236	2190	2x2	LTE B2	20	900	1960	4x4	LTE B71	20	68761	634.5	2x2	23.24	23.28
CA_2A-[66A]-[66A]-71A	LTE B66	15	132222	1745	QPSK	1	36	66786	2145	4x4	LTE B66	20	67236	2190	4x4	LTE B2	20	900	1960	2x2	LTE B71	20	68761	634.5	2x2	23.22	23.28
CA_[2A]-[66A]-[66A]-71A	LTE B66	15	132222	1745	QPSK	1	36	66786	2145	4x4	LTE B66	20	67236	2190	4x4	LTE B2	20	900	1960	4x4	LTE B71	20	68761	634.5	2x2	23.26	23.28
CA_[2C]-66A-66A	LTE B66	15	132222	1745	QPSK	1	36	66786	2145	2x2	LTE B66	20	67236	2190	2x2	LTE B2	20	900	1960	4x4	LTE B2	20	702	1940.2	4x4	23.21	23.28
CA_2C-66A-[66A]	LTE B66	15	132222	1745	QPSK	1	36	66786	2145	2x2	LTE B66	20	67236	2190	4x4	LTE B2	20	900	1960	2x2	LTE B2	20	702	1940.2	2x2	23.34	23.28
CA_2C-[66A]-66A	LTE B66	15	132222	1745	QPSK	1	36	66786	2145	4x4	LTE B66	20	67236	2190	2x2	LTE B2	20	900	1960	2x2	LTE B2	20	702	1940.2	2x2	23.29	23.28
CA_[2C]-66A-[66A]	LTE B66	15	132222	1745	QPSK	1	36	66786	2145	2x2	LTE B66	20	67236	2190	4x4	LTE B2	20	900	1960	4x4	LTE B2	20	702	1940.2	4x4	23.40	23.28
CA_[2C]-[66A]-66A	LTE B66	15	132222	1745	QPSK	1	36	66786	2145	4x4	LTE B66	20	67236	2190	2x2	LTE B2	20	900	1960	4x4	LTE B2	20	702	1940.2	4x4	23.28	23.28
CA_2C-[66A]-[66A]	LTE B66	15	132222	1745	QPSK	1	36	66786	2145	4x4	LTE B66	20	67236	2190	4x4	LTE B2	20	900	1960	2x2	LTE B2	20	702	1940.2	2x2	23.26	23.28
CA_[2C]-[66A]-[66A]	LTE B66	15	132222	1745	QPSK	1	36	66786	2145	4x4	LTE B66	20	67236	2190	4x4	LTE B2	20	900	1960	4x4	LTE B2	20	702	1940.2	4x4	23.29	23.28
CA_[2A]-66C-71A	LTE B66	15	132222	1745	QPSK	1	36	66786	2145	2x2	LTE B66	20	66615	2127.9	2x2	LTE B2	20	900	1960	4x4	LTE B71	20	68761	634.5	2x2	23.10	23.28
CA_2A-[66C]-71A	LTE B66	15	132222	1745	QPSK	1	36	66786	2145	4x4	LTE B66	20	66615	2127.9	4x4	LTE B2	20	900	1960	2x2	LTE B71	20	68761	634.5	2x2	23.15	23.28
CA_[2A]-[66C]-71A	LTE B66	15	132222	1745	QPSK	1	36	66786	2145	4x4	LTE B66	20	66615	2127.9	4x4	LTE B2	20	900	1960	4x4	LTE B71	20	68761	634.5	2x2	23.22	23.28
CA_5A-5A-[66A]-66A	LTE B66	15	132222	1745	QPSK	1	36	66786	2145	4x4	LTE B66	20	67236	2190	2x2	LTE B5	10	2525	881.5	2x2	LTE B5	5	2425	871.5	2x2	23.05	23.28
CA_5A-5A-66A-[66A]	LTE B66	15	132222	1745	QPSK	1	36	66786	2145	2x2	LTE B66	20	67236	2190	4x4	LTE B5	10	2525	881.5	2x2	LTE B5	5	2425	871.5	2x2	23.07	23.28
CA_5A-5A-[66A]-[66A]	LTE B66	15	132222	1745	QPSK	1	36	66786	2145	4x4	LTE B66	20	67236	2190	4x4	LTE B5	10	2525	881.5	2x2	LTE B5	5	2425	871.5	2x2	23.17	23.28
CA_5A-5A-[66B]	LTE B66	15	132222	1745	QPSK	1	36	66786	2145	4x4	LTE B66	5	66693	2135.7	4x4	LTE B5	10	2525	881.5	2x2	LTE B5	5	2425	871.5	2x2	23.02	23.28
CA_5A-5A-[66C]	LTE B66	15	132222	1745	QPSK	1	36	66786	2145	4x4	LTE B66	20	66615	2127.9	4x4	LTE B5	10	2525	881.5	2x2	LTE B5	5	2425	871.5	2x2	23.14	23.28
CA_5A-46C-[66A]	LTE B66	15	132222	1745	QPSK	1	36	66786	2145	4x4	LTE B5	10	2525	881.5	2x2	LTE B46	20	50665	5537.5	2x2	LTE B46	20	50467	5517.7	2x2	23.00	23.28
CA_13A-46C-[66A]	LTE B66	15	132222	1745	QPSK	1	36	66786	2145	4x4	LTE B13	10	5230	751	2x2	LTE B46	20	50665	5537.5	2x2	LTE B46	20	50467	5517.7	2x2	23.13	23.28
CA_13A-[48A]-66B	LTE B66	15	132222	1745	QPSK	1	36	66786	2145	2x2	LTE B66	5	66693	2135.7	2x2	LTE B13	10	5230	751	2x2	LTE B48	20	55990	3625	4x4	23.11	23.28
CA_13A-48A-[66B]	LTE B66	15	132222	1745	QPSK	1	36	66786	2145	4x4	LTE B66	5	66693	2135.7	4x4	LTE B13	10	5230	751	2x2	LTE B48	20	55990	3625	2x2	22.97	23.28
CA_13A-[48A]-[66B]	LTE B66	15	132222	1745	QPSK	1	36	66786	2145	4x4	LTE B66	5	66693	2135.7	4x4	LTE B13	10	5230	751	2x2	LTE B48	20	55990	3625	4x4	23.08	23.28
CA_13A-[48A]-66C	LTE B66	15	132222	1745	QPSK	1	36	66786	2145	2x2	LTE B66	20	66615	2127.9	2x2	LTE B13	10	5230	751	2x2	LTE B48	20	55990	3625	4x4	23.18	23.28
CA_13A-48A-[66C]	LTE B66	15	132222	1745	QPSK	1	36	66786	2145	4x4	LTE B66	20	66615	2127.9	4x4	LTE B13	10	5230	751	2x2	LTE B48	20	55990	3625	2x2	22.97	23.28
CA_13A-[48A]-[66C]	LTE B66	15	132222	1745	QPSK	1	36	66786	2145	4x4	LTE B66	20	66615	2127.9	4x4	LTE B13	10	5230	751	2x2	LTE B48	20	55990	3625	4x4	23.03	23.28
CA_29A-[30A]-66A-66A	LTE B66	15	132222	1745	QPSK	1	36	66786	2145	2x2	LTE B66	20	67236	2190	2x2	LTE B29	10	9715	722.5	2x2	LTE B30	10	9820	2355	4x4	23.24	23.28
CA_29A-30A-[66A]-66A	LTE B66	15	132222	1745	QPSK	1	36	66786	2145	4x4	LTE B66	20	67236	2190	2x2	LTE B29	10	9715	722.5	2x2	LTE B30	10	9820	2355	2x2	23.22	23.28
CA_29A-30A-66A-[66A]	LTE B66	15	132222	1745	QPSK	1	36	66786	2145	2x2	LTE B66	20	67236	2190	4x4	LTE B29	10	9715	722.5	2x2	LTE B30	10	9820	2355	2x2	22.92	23.28
CA_29A-[30A]-[66A]-66A	LTE B66	15	132222	1745	QPSK	1	36	66786	2145	4x4	LTE B66	20	67236	2190	2x2	LTE B29	10	9715	722.5	2x2	LTE B30	10	9820	2355	4x4	23.25	23.28
CA_29A-[30A]-66A-[66A]	LTE B66	15	132222	1745	QPSK	1	36	66786	2145	2x2	LTE B66	20	67236	2190	4x4	LTE B29	10	9715	722.5	2x2	LTE B30	10	9820	2355	4x4	23.05	23.28
CA_29A-30A-[66A]-[66A]	LTE B66	15	132222	1745	QPSK	1	36	66786	2145	4x4	LTE B66	20	67236	2190	2x2	LTE B29	10	9715	722.5	2x2	LTE B30	10	9820	2355	2x2	23.26	23.28
CA_29A-[30A]-[66A]-[66A]	LTE B66	15	132222	1745	QPSK	1	36	66786	2145	4x4	LTE B66	20	67236	2190	4x4	LTE B29	10	9715	722.5	2x2	LTE B30	10	9820	2355	4x4	23.24	23.28
CA_46C-66A-[66A]	LTE B66	15	132222	1745	QPSK	1	36	66786	2145	2x2	LTE B66	20	67236	2190	4x4	LTE B46	20	50665	5537.5	2x2	LTE B46	20	50467	5517.7	2x2	23.06	23.28
CA_46C-[66A]-66A	LTE B66	15	132222	1745	QPSK	1	36	66786	2145	4x4	LTE B66	20	67236	2190	2x2	LTE B46	20	50665	5537.5	2x2	LTE B46	20	50467	5517.7	2x2	23.06	23.28
CA_46C-[66A]-[66A]	LTE B66	15	132222	1745	QPSK	1	36	66786	2145	4x4	LTE B66	20	67236	2190	4x4	LTE B46	20	50665	5537.5	2x2	LTE B46	20	50467	5517.7	2x2	22.95	23.28
CA_[48A]-48A-66A-66A	LTE B66	15	132222	1745	QPSK	1	36	66786	2145	2x2	LTE B66	20	67236	2190	2x2	LTE B48	20	55990	3625	4x4	LTE B48	20	55340	3560	2x2	23.09	23.28
CA_48A-48A-66A-[66A]	LTE B66	15	132222	1745	QPSK	1	36	66786	2145	2x2	LTE B66	20	67236	2190	4x4	LTE B48	20	55990	3625	2x2	LTE B48	20	55340	3560	2x2	23.21	23.28
CA_48A-48A-[66A]-66A	LTE B66	15	132222	1745	QPSK	1	36	66786	2145	4x4	LTE B66	20	67236	2190	2x2	LTE B48	20	55990	3625	2x2	LTE B48	20	55340	3560	2x2	23.15	23.28
CA_[48A]-[48A]-66A-66A	LTE B66	15	132222	1745	QPSK	1	36	66786	2145	2x2	LTE B66	20	67236	2190	2x2	LTE B48	20	55990	3625	4x4	LTE B48	20	55340	3560	4x4	23.30	23.28
CA_[48A]-48A-66A-[66A]	LTE B66	15	132222	1745	QPSK	1	36	66786	2145	2x2	LTE B66	20	67236	2190	4x4	LTE B48	20	55990	3625	4x4	LTE B48	20	55340	3560	2x2	23.38	23.28
CA_[48A]-48A-[66A]-66A	LTE B66	15	132222	1745	QPSK	1	36	66786	2145	4x4	LTE B66	20	67236	2190	2x2	LTE B48	20	55990	3625	4x4	LTE B48	20	55340	3560	2x2	23.17	23.28
CA_48A-48A-[66A]-[66A]	LTE B66	15	132222	1745	QPSK	1	36	66786	2145	4x4	LTE B66	20	67236	2190	4x4	LTE B48	20	55990	3625	2x2	LTE B48	20	55340	3560	2x2	23.19	23.28
CA_[48A]-[48A]-66A-66A	LTE B66	15	132222	1745	QPSK	1	36	66786	2145	2x2	LTE B66	20	67236	2190	4x4	LTE B48	20	55990	3625	4x4	LTE B48	20	55340	3560	4x4	23.39	23.28
CA_[48A]-[48A]-[66A]-66A	LTE B66	15	132222	1745	QPSK	1	36	66786	2145	4x4	LTE B66	20	67236	2190	2x2	LTE B48	20	55990	3625	4x4	LTE B48	20	55340	3560	4x4	23.18	23.28
CA_[48A]-48A-[66A]-[66A]	LTE B66	15	132222	1745	QPSK	1	36	66786	2145	4x4	LTE B66	20	67236	2190	4x4	LTE B48	20	55990	3625	4x4	LTE B48	20	55340	3560	2x2	23.21	23.28
CA_[48A]-[48A]-[66A]-[66A]	LTE B66	15	132222	1745	QPSK	1	36	66786	2145	4x4	LTE B66	20	67236	2190	4x4	LTE B48	20	55990	3625	4x4	LTE B48	20	55340	3560	4x4	23.20	23.28
CA_[48A]-48A-66B	LTE B66	15	132222	1745	QPSK	1	36	66786	2145	2x2	LTE B66	5	66693	2135.7	2x2	LTE B48	20	55990	3625	4x4	LTE B48	20	55340	3560	2x2	23.22	23.28
CA_48A-48A-[66B]	LTE B66	15	132222	1745	QPSK	1	36	66786	2145	4x4	LTE B66	5	66693	2135.7	4x4	LTE B48	20	55990	3625	2x2	LT

	PCC										SCC 1					SCC 2					SCC 3					SCC 4					Power	
Combination	PCC Band	PCC BW [MHz]	PCC (UL) Ch.	PCC (UL) Freq. [MHz]	Mod.	PCC UL# RB	PCC UL RB Offset	PCC (DL) Ch.	PCC (DL) Freq. [MHz]	DL Ant. Config.	SCC Band	SCC BW [MHz]	SCC (DL) Ch.	SCC (DL) Freq. [MHz]	DL Ant. Config.	SCC Band	SCC BW [MHz]	SCC (DL) Ch.	SCC (DL) Freq. [MHz]	DL Ant. Config.	SCC Band	SCC BW [MHz]	SCC (DL) Ch.	SCC (DL) Freq. [MHz]	DL Ant. Config.	SCC Band	SCC BW [MHz]	SCC (DL) Ch.	SCC (DL) Freq. [MHz]	DL Ant. Config.	LTE Tx.Power with DL CA Enabled (dBm)	LTE Single Carrier Tx Power (dBm)
CA_[2A]-2A-5A-30A-66A	LTE B66	15	132322	1745	QPSK	1	36	66786	2145	2x2	LTE B2	20	900	1960	4x4	LTE B2	20	700	1940	2x2	LTE B5	10	2525	881.5	2x2	LTE B30	10	9820	2355	2x2	23.22	23.28
CA_2A-2A-5A-[30A]-66A	LTE B66	15	132322	1745	QPSK	1	36	66786	2145	2x2	LTE B2	20	900	1960	2x2	LTE B2	20	700	1940	2x2	LTE B5	10	2525	881.5	2x2	LTE B30	10	9820	2355	4x4	23.23	23.28
CA_2A-2A-5A-30A-[66A]	LTE B66	15	132322	1745	QPSK	1	36	66786	2145	4x4	LTE B2	20	900	1960	2x2	LTE B2	20	700	1940	2x2	LTE B5	10	2525	881.5	2x2	LTE B30	10	9820	2355	2x2	23.29	23.28
CA_[2A]-[2A]-5A-30A-66A	LTE B66	15	132322	1745	QPSK	1	36	66786	2145	2x2	LTE B2	20	900	1960	4x4	LTE B2	20	700	1940	4x4	LTE B5	10	2525	881.5	2x2	LTE B30	10	9820	2355	2x2	23.34	23.28
CA_[2A]-2A-5A-[30A]-66A	LTE B66	15	132322	1745	QPSK	1	36	66786	2145	2x2	LTE B2	20	900	1960	4x4	LTE B2	20	700	1940	2x2	LTE B5	10	2525	881.5	2x2	LTE B30	10	9820	2355	4x4	23.36	23.28
CA_[2A]-2A-5A-30A-[66A]	LTE B66	15	132322	1745	QPSK	1	36	66786	2145	4x4	LTE B2	20	900	1960	4x4	LTE B2	20	700	1940	2x2	LTE B5	10	2525	881.5	2x2	LTE B30	10	9820	2355	2x2	23.39	23.28
CA_2A-2A-5A-[30A]-[66A]	LTE B66	15	132322	1745	QPSK	1	36	66786	2145	4x4	LTE B2	20	900	1960	2x2	LTE B2	20	700	1940	2x2	LTE B5	10	2525	881.5	2x2	LTE B30	10	9820	2355	4x4	23.37	23.28
CA_[2A]-[2A]-5A-[30A]-66A	LTE B66	15	132322	1745	QPSK	1	36	66786	2145	2x2	LTE B2	20	900	1960	4x4	LTE B2	20	700	1940	4x4	LTE B5	10	2525	881.5	2x2	LTE B30	10	9820	2355	4x4	23.40	23.28
CA_[2A]-[2A]-5A-30A-[66A]	LTE B66	15	132322	1745	QPSK	1	36	66786	2145	4x4	LTE B2	20	900	1960	4x4	LTE B2	20	700	1940	4x4	LTE B5	10	2525	881.5	2x2	LTE B30	10	9820	2355	2x2	23.43	23.28
CA_[2A]-2A-5A-[30A]-[66A]	LTE B66	15	132322	1745	QPSK	1	36	66786	2145	4x4	LTE B2	20	900	1960	4x4	LTE B2	20	700	1940	2x2	LTE B5	10	2525	881.5	2x2	LTE B30	10	9820	2355	4x4	23.42	23.28
CA_[2A]-[2A]-5A-[30A]-[66A]	LTE B66	15	132322	1745	QPSK	1	36	66786	2145	4x4	LTE B2	20	900	1960	4x4	LTE B2	20	700	1940	4x4	LTE B5	10	2525	881.5	2x2	LTE B30	10	9820	2355	4x4	23.34	23.28
CA_[2A]-2A-5A-66A-66A	LTE B66	15	132322	1745	QPSK	1	36	66786	2145	2x2	LTE B66	20	67236	2190	2x2	LTE B2	20	900	1960	4x4	LTE B2	20	700	1940	2x2	LTE B5	10	2525	881.5	2x2	23.21	23.28
CA_2A-2A-5A-66A-[66A]	LTE B66	15	132322	1745	QPSK	1	36	66786	2145	2x2	LTE B66	20	67236	2190	4x4	LTE B2	20	900	1960	2x2	LTE B2	20	700	1940	2x2	LTE B5	10	2525	881.5	2x2	23.34	23.28
CA_2A-2A-5A-[66A]-66A	LTE B66	15	132322	1745	QPSK	1	36	66786	2145	4x4	LTE B66	20	67236	2190	2x2	LTE B2	20	900	1960	2x2	LTE B2	20	700	1940	2x2	LTE B5	10	2525	881.5	2x2	23.08	23.28
CA_[2A]-[2A]-5A-66A-66A	LTE B66	15	132322	1745	QPSK	1	36	66786	2145	2x2	LTE B66	20	67236	2190	2x2	LTE B2	20	900	1960	4x4	LTE B2	20	700	1940	4x4	LTE B5	10	2525	881.5	2x2	23.25	23.28
CA_[2A]-2A-5A-66A-[66A]	LTE B66	15	132322	1745	QPSK	1	36	66786	2145	2x2	LTE B66	20	67236	2190	4x4	LTE B2	20	900	1960	4x4	LTE B2	20	700	1940	2x2	LTE B5	10	2525	881.5	2x2	23.40	23.28
CA_[2A]-2A-5A-[66A]-66A	LTE B66	15	132322	1745	QPSK	1	36	66786	2145	4x4	LTE B66	20	67236	2190	2x2	LTE B2	20	900	1960	4x4	LTE B2	20	700	1940	2x2	LTE B5	10	2525	881.5	2x2	23.22	23.28
CA_2A-2A-5A-[66A]-[66A]	LTE B66	15	132322	1745	QPSK	1	36	66786	2145	4x4	LTE B66	20	67236	2190	4x4	LTE B2	20	900	1960	2x2	LTE B2	20	700	1940	2x2	LTE B5	10	2525	881.5	2x2	23.21	23.28
CA_[2A]-[2A]-5A-[66A]-66A	LTE B66	15	132322	1745	QPSK	1	36	66786	2145	4x4	LTE B66	20	67236	2190	2x2	LTE B2	20	900	1960	4x4	LTE B2	20	700	1940	4x4	LTE B5	10	2525	881.5	2x2	23.22	23.28
CA_[2A]-[2A]-5A-66A-[66A]	LTE B66	15	132322	1745	QPSK	1	36	66786	2145	2x2	LTE B66	20	67236	2190	4x4	LTE B2	20	900	1960	4x4	LTE B2	20	700	1940	4x4	LTE B5	10	2525	881.5	2x2	23.27	23.28
CA_[2A]-2A-5A-[66A]-[66A]	LTE B66	15	132322	1745	QPSK	1	36	66786	2145	4x4	LTE B66	20	67236	2190	4x4	LTE B2	20	900	1960	4x4	LTE B2	20	700	1940	2x2	LTE B5	10	2525	881.5	2x2	23.31	23.28
CA_[2A]-[2A]-5A-[66A]-[66A]	LTE B66	15	132322	1745	QPSK	1	36	66786	2145	4x4	LTE B66	20	67236	2190	4x4	LTE B2	20	900	1960	4x4	LTE B2	20	700	1940	4x4	LTE B5	10	2525	881.5	2x2	23.35	23.28
CA_[2A]-2A-5A-66B	LTE B66	15	132322	1745	QPSK	1	36	66786	2145	2x2	LTE B66	5	66693	2135.7	2x2	LTE B2	20	900	1960	4x4	LTE B2	20	700	1940	2x2	LTE B5	10	2525	881.5	2x2	23.25	23.28
CA_2A-2A-5A-[66B]	LTE B66	15	132322	1745	QPSK	1	36	66786	2145	4x4	LTE B66	5	66693	2135.7	4x4	LTE B2	20	900	1960	2x2	LTE B2	20	700	1940	2x2	LTE B5	10	2525	881.5	2x2	23.32	23.28
CA_[2A]-[2A]-5A-66B	LTE B66	15	132322	1745	QPSK	1	36	66786	2145	2x2	LTE B66	5	66693	2135.7	2x2	LTE B2	20	900	1960	4x4	LTE B2	20	700	1940	4x4	LTE B5	10	2525	881.5	2x2	23.31	23.28

© 2020 PCTEST

	PCC									SCC 1					SCC 2					SCC 3					SCC 4					SCC 5					SCC 6					Power	
Combination	PCC Band	PCC BW [MHz]	PCC (UL) Ch.	PCC (UL) Freq. [MHz]	Mod.	PCC UL# RB	PCC UL RB Offset	PCC (DL) Ch.	PCC (DL) Freq. [MHz]	DL Ant. Config.	SCC Band	SCC BW [MHz]	SCC (DL) Ch.	SCC (DL) Freq. [MHz]	DL Ant. Config.	SCC Band	SCC BW [MHz]	SCC (DL) Ch.	SCC (DL) Freq. [MHz]	DL Ant. Config.	SCC Band	SCC BW [MHz]	SCC (DL) Ch.	SCC (DL) Freq. [MHz]	DL Ant. Config.	SCC Band	SCC BW [MHz]	SCC (DL) Ch.	SCC (DL) Freq. [MHz]	DL Ant. Config.	SCC Band	SCC BW [MHz]	SCC (DL) Ch.	SCC (DL) Freq. [MHz]	DL Ant. Config.	SCC Band	SCC BW [MHz]	SCC (DL) Ch.	SCC (DL) Freq. [MHz]	DL Ant. Config.	LTE Tx.Power with DL CA Enabled (dBm)	LTE Single Carrier Tx Power (dBm)
CA_(2A)-5A-46D-66A	LTE B46	15	132222	1745	QPSK	1	36	66786	2145	2x2	LTE B2	20	900	1960	4x4	LTE B5	10	2525	881.5	2x2	LTE B46	20	50665	5537.5	2x2	LTE B46	20	50467	5517.7	2x2	LTE B46	20	50862	5557.3	2x2	-	-	-	-	-	23.13	23.28
CA_(2A-5A-46D)-66A	LTE B46	15	132222	1745	QPSK	1	36	66786	2145	4x4	LTE B2	20	900	1960	2x2	LTE B5	10	2525	881.5	2x2	LTE B46	20	50665	5537.5	2x2	LTE B46	20	50467	5517.7	2x2	LTE B46	20	50862	5557.3	2x2	-	-	-	-	-	23.12	23.28
CA_(2A)-5A-46D-66A	LTE B46	15	132222	1745	QPSK	1	36	66786	2145	4x4	LTE B2	20	900	1960	4x4	LTE B5	10	2525	881.5	2x2	LTE B46	20	50665	5537.5	2x2	LTE B46	20	50467	5517.7	2x2	LTE B46	20	50862	5557.3	2x2	-	-	-	-	-	23.13	23.28
CA_(2A)-13A-46D-66A	LTE B46	15	132222	1745	QPSK	1	36	66786	2145	4x4	LTE B2	20	900	1960	4x4	LTE B13	10	5230	751	2x2	LTE B46	20	50665	5537.5	2x2	LTE B46	20	50467	5517.7	2x2	LTE B46	20	50862	5557.3	2x2	-	-	-	-	-	23.19	23.28
CA_2A-13A-46D-66A	LTE B46	15	132222	1745	QPSK	1	36	66786	2145	4x4	LTE B2	20	900	1960	2x2	LTE B13	10	5230	751	2x2	LTE B46	20	50665	5537.5	2x2	LTE B46	20	50467	5517.7	2x2	LTE B46	20	50862	5557.3	2x2	-	-	-	-	-	23.21	23.28
CA_(2A)-13A-46D-66A	LTE B46	15	132222	1745	QPSK	1	36	66786	2145	4x4	LTE B2	20	900	1960	4x4	LTE B13	10	5230	751	2x2	LTE B46	20	50665	5537.5	2x2	LTE B46	20	50467	5517.7	2x2	LTE B46	20	50862	5557.3	2x2	-	-	-	-	-	23.21	23.28
CA_(2A)-46A-66A	LTE B46	15	132222	1745	QPSK	1	36	66786	2145	2x2	LTE B2	20	900	1960	2x2	LTE B46	20	50665	5537.5	2x2	LTE B46	20	50467	5517.7	2x2	LTE B46	20	50990	3625	2x2	LTE B46	20	56188	3644.8	2x2	LTE B48	20	56386	3664.6	2x2	-	-	-	-	23.06	23.28
CA_2A-46A-66A	LTE B46	15	132222	1745	QPSK	1	36	66786	2145	4x4	LTE B2	20	900	1960	2x2	LTE B46	20	50665	5537.5	2x2	LTE B46	20	50990	3625	4x4	LTE B46	20	56188	3644.8	2x2	LTE B48	20	56386	3664.6	4x4	-	-	-	-	-	23.01	23.28
CA_(2A)-46A-66A	LTE B46	15	132222	1745	QPSK	1	36	66786	2145	4x4	LTE B2	20	900	1960	4x4	LTE B46	20	50665	5537.5	2x2	LTE B46	20	50990	3625	4x4	LTE B46	20	56188	3644.8	2x2	LTE B48	20	56386	3664.6	4x4	-	-	-	-	-	23.11	23.28
CA_(2A)-46A-66A	LTE B46	15	132222	1745	QPSK	1	36	66786	2145	4x4	LTE B2	20	900	1960	4x4	LTE B46	20	50665	5537.5	2x2	LTE B46	20	50990	3625	2x2	LTE B46	20	56188	3644.8	2x2	LTE B48	20	56386	3664.6	4x4	-	-	-	-	-	23.20	23.28
CA_(2A)-46A-66A	LTE B46	15	132222	1745	QPSK	1	36	66786	2145	4x4	LTE B2	20	900	1960	2x2	LTE B46	20	50665	5537.5	2x2	LTE B46	20	50990	3625	4x4	LTE B46	20	56188	3644.8	2x2	LTE B48	20	56386	3664.6	4x4	-	-	-	-	-	23.22	23.28
CA_(2A)-46C-66C-66A	LTE B46	15	132222	1745	QPSK	1	36	66786	2145	4x4	LTE B2	20	900	1960	4x4	LTE B46	20	50665	5537.5	2x2	LTE B46	20	50467	5517.7	2x2	LTE B46	20	50990	3625	2x2	LTE B48	20	56188	3644.8	2x2	-	-	-	-	-	23.13	23.28
CA_(2A)-46C-66C(-66A)	LTE B46	15	132222	1745	QPSK	1	36	66786	2145	4x4	LTE B2	20	900	1960	2x2	LTE B46	20	50665	5537.5	2x2	LTE B46	20	50467	5517.7	2x2	LTE B46	20	50990	3625	4x4	LTE B48	20	56188	3644.8	4x4	-	-	-	-	-	23.12	23.28
CA_(2A)-46C-66C-66A	LTE B46	15	132222	1745	QPSK	1	36	66786	2145	4x4	LTE B2	20	900	1960	2x2	LTE B46	20	50665	5537.5	2x2	LTE B46	20	50467	5517.7	2x2	LTE B46	20	50990	3625	2x2	LTE B48	20	56188	3644.8	2x2	-	-	-	-	-	23.20	23.28
CA_(2A)-46C-66C(-66A)	LTE B46	15	132222	1745	QPSK	1	36	66786	2145	4x4	LTE B2	20	900	1960	2x2	LTE B46	20	50665	5537.5	2x2	LTE B46	20	50467	5517.7	2x2	LTE B46	20	50990	3625	4x4	LTE B48	20	56188	3644.8	4x4	-	-	-	-	-	23.22	23.28
CA_(2A)-46C-66C-66A	LTE B46	15	132222	1745	QPSK	1	36	66786	2145	4x4	LTE B2	20	900	1960	2x2	LTE B46	20	50665	5537.5	2x2	LTE B46	20	50467	5517.7	2x2	LTE B46	20	50990	3625	2x2	LTE B48	20	56188	3644.8	2x2	-	-	-	-	-	23.20	23.28
CA_(2A)-46C-66C(-66A)	LTE B46	15	132222	1745	QPSK	1	36	66786	2145	4x4	LTE B2	20	900	1960	2x2	LTE B46	20	50665	5537.5	2x2	LTE B46	20	50467	5517.7	2x2	LTE B46	20	50990	3625	4x4	LTE B48	20	56188	3644.8	4x4	-	-	-	-	-	23.22	23.28
CA_(2A)-46C-66C-66A	LTE B46	15	132222	1745	QPSK	1	36	66786	2145	4x4	LTE B2	20	900	1960	2x2	LTE B46	20	50665	5537.5	2x2	LTE B46	20	50467	5517.7	2x2	LTE B46	20	50990	3625	2x2	LTE B48	20	56188	3644.8	2x2	-	-	-	-	-	23.20	23.28
CA_(2A)-46C-66C(-66A)	LTE B46	15	132222	1745	QPSK	1	36	66786	2145	4x4	LTE B2	20	900	1960	2x2	LTE B46	20	50665	5537.5	2x2	LTE B46	20	50467	5517.7	2x2	LTE B46	20	50990	3625	4x4	LTE B48	20	56188	3644.8	4x4	-	-	-	-	-	23.22	23.28
CA_(2A)-46C-66C-66A	LTE B46	15	132222	1745	QPSK	1	36	66786	2145	4x4	LTE B2	20	900	1960	2x2	LTE B46	20	50665	5537.5	2x2	LTE B46	20	50467	5517.7	2x2	LTE B46	20	50990	3625	2x2	LTE B48	20	56188	3644.8	2x2	-	-	-	-	-	23.20	23.28
CA_(2A)-46C-66C(-66A)	LTE B46	15	132222	1745	QPSK	1	36	66786	2145	4x4	LTE B2	20	900	1960	2x2	LTE B46	20	50665	5537.5	2x2	LTE B46	20	50467	5517.7	2x2	LTE B46	20	50990	3625	4x4	LTE B48	20	56188	3644.8	4x4	-	-	-	-	-	23.22	23.28
CA_(2A)-46C-66C-66A	LTE B46	15	132222	1745	QPSK	1	36	66786	2145	4x4	LTE B2	20	900	1960	2x2	LTE B46	20	50665	5537.5	2x2	LTE B46	20	50467	5517.7	2x2	LTE B46	20	50990	3625	2x2	LTE B48	20	56188	3644.8	2x2	-	-	-	-	-	23.20	23.28
CA_(2A)-46C-66C(-66A)	LTE B46	15	132222	1745	QPSK	1	36	66786	2145	4x4	LTE B2	20	900	1960	2x2	LTE B46	20	50665	5537.5	2x2	LTE B46	20	50467	5517.7	2x2	LTE B46	20	50990	3625	4x4	LTE B48	20	56188	3644.8	4x4	-	-	-	-	-	23.22	23.28
CA_(2A)-46C-66C-66A	LTE B46	15	132222	1745	QPSK	1	36	66786	2145	4x4	LTE B2	20	900	1960	2x2	LTE B46	20	50665	5537.5	2x2	LTE B46	20	50467	5517.7	2x2	LTE B46	20	50990	3625	2x2	LTE B48	20	56188	3644.8	2x2	-	-	-	-	-	23.20	23.28
CA_(2A)-46C-66C(-66A)	LTE B46	15	132222	1745	QPSK	1	36	66786	2145	4x4	LTE B2	20	900	1960	2x2	LTE B46	20	50665	5537.5	2x2	LTE B46	20	50467	5517.7	2x2	LTE B46	20	50990	3625	4x4	LTE B48	20	56188	3644.8	4x4	-	-	-	-	-	23.22	23.28
CA_(2A)-46C-66C-66A	LTE B46	15	132222	1745	QPSK	1	36	66786	2145	4x4	LTE B2	20	900	1960	2x2	LTE B46	20	50665	5537.5	2x2	LTE B46	20	50467	5517.7	2x2	LTE B46	20	50990	3625	2x2	LTE B48	20	56188	3644.8	2x2	-	-	-	-	-	23.20	23.28
CA_(2A)-46C-66C(-66A)	LTE B46	15	132222	1745	QPSK	1	36	66786	2145	4x4	LTE B2	20	900	1960	2x2	LTE B46	20	50665	5537.5	2x2	LTE B46	20	50467	5517.7	2x2	LTE B46	20	50990	3625	4x4	LTE B48	20	56188	3644.8	4x4	-	-	-	-	-	23.22	23.28
CA_(2A)-46C-66C-66A	LTE B46	15	132222	1745	QPSK	1	36	66786	2145	4x4	LTE B2	20	900	1960	2x2	LTE B46	20	50665	5537.5	2x2	LTE B46	20	50467	5517.7	2x2	LTE B46	20	50990	3625	2x2	LTE B48	20	56188	3644.8	2x2	-	-	-	-	-	23.20	23.28
CA_(2A)-46C-66C(-66A)	LTE B46	15	132222	1745	QPSK	1	36	66786	2145	4x4	LTE B2	20	900	1960	2x2	LTE B46	20	50665	5537.5	2x2	LTE B46	20	50467	5517.7	2x2	LTE B46	20	50990	3625	4x4	LTE B48	20	56188	3644.8	4x4	-	-	-	-	-	23.22	23.28
CA_(2A)-46C-66C-66A	LTE B46	15	132222	1745	QPSK	1	36	66786	2145	4x4	LTE B2	20	900	1960	2x2	LTE B46	20	50665	5537.5	2x2	LTE B46	20	50467	5517.7	2x2	LTE B46	20	50990	3625	2x2	LTE B48	20	56188	3644.8	2x2	-	-	-	-	-	23.20	23.28
CA_(2A)-46C-66C(-66A)	LTE B46	15	132222	1745	QPSK	1	36	66786	2145	4x4	LTE B2	20	900	1960	2x2	LTE B46	20	50665	5537.5	2x2	LTE B46	20	50467	5517.7	2x2	LTE B46	20	50990	3625	4x4	LTE B48	20	56188	3644.8	4x4	-	-	-	-	-	23.22	23.28
CA_(2A)-46C-66C-66A	LTE B46	15	132222	1745	QPSK	1	36	66786	2145	4x4	LTE B2	20	900	1960	2x2	LTE B46	20	50665	5537.5	2x2	LTE B46	20	50467	5517.7	2x2	LTE B46	20	50990	3625	2x2	LTE B48	20	56188	3644.8	2x2	-	-	-	-	-	23.20	23.28
CA_(2A)-46C-66C(-66A)	LTE B46	15	132222	1745	QPSK	1	36	66786	2145	4x4	LTE B2	20	900	1960	2x2	LTE B46	20	50665	5537.5	2x2	LTE B46	20	50467	5517.7	2x2	LTE B46	20	50990	3625	4x4	LTE B48	20	56188	3644.8	4x4	-	-	-	-	-	23.22	23.28
CA_(2A)-46C-66C-66A	LTE B46	15	132222	1745	QPSK	1	36	66786	2145	4x4	LTE B2	20	900	1960	2x2	LTE B46	20	50665	5537.5	2x2	LTE B46	20	50467	5517.7	2x2	LTE B46	20	50990	3625	2x2	LTE B48	20	56188	3644.8	2x2	-	-	-	-	-	23.20	23.28
CA_(2A)-46C-66C(-66A)	LTE B46	15	132222	1745	QPSK	1	36	66786	2145	4x4	LTE B2	20	900	1960	2x2	LTE B46	20	50665	5537.5	2x2	LTE B46	20	50467	5517.7	2x2	LTE B46	20	50990	3625	4x4	LTE B48	20	56188	3644.8	4x4	-	-	-	-	-	23.22	23.28

1.4.9 LTE Band 25 as PCC

Table 20
Maximum Output Powers

	PCC									SCC 1					SCC 2					SCC 3					SCC 4					Power	
Combination	PCC Band	PCC BW [MHz]	PCC (UL) Ch.	PCC (UL) Freq. [MHz]	Mod.	PCC UL# RB	PCC UL RB Offset	PCC (DL) Ch.	PCC (DL) Freq. [MHz]	DL Ant. Config.	SCC Band	SCC BW [MHz]	SCC (DL) Ch.	SCC (DL) Freq. [MHz]	DL Ant. Config.	SCC Band	SCC BW [MHz]	SCC (DL) Ch.	SCC (DL) Freq. [MHz]	DL Ant. Config.	SCC Band	SCC BW [MHz]	SCC (DL) Ch.	SCC (DL) Freq. [MHz]	DL Ant. Config.	SCC Band	SCC BW [MHz]	SCC (DL) Ch.	SCC (DL) Freq. [MHz]	DL Ant. Config.	LTE Tx.Power with DL CA Enabled (dBm)	LTE Single Carrier Tx Power (dBm)
CA_5A-(25A)	LTE B25	5	26665	1912.5	QPSK	1	24	8665	1992.5	4x4	LTE B5	10	2525	881.5	2x2	-	-	-	-	-	-	-	-	-	-	-	-	-	-	-	23.42	23.52
CA_(5A)-25A	LTE B25	5	26665	1912.5	QPSK	1	24	8665	1992.5	4x4	LTE B46	20	50665	5537.5	2x2	-	-	-	-	-	-	-	-	-	-	-	-	-	-	-	23.40	23.52
CA_(25A)-25A-26A	LTE B25	5	26665	1912.5	QPSK	1	24	8665	1992.5	4x4	LTE B25	20	8140	1940	2x2	LTE B26	5	8865	876.5	2x2	-	-	-	-	-	-	-	-	-	-	23.39	23.52
CA_25A-(25A)-26A	LTE B25	5	26665	1912.5	QPSK	1	24	8665	1992.5	2x2	LTE B25	20	8140	1940	4x4	LTE B26	5	8865	876.5	2x2	-	-	-	-	-	-	-	-	-	-	23.32	23.52
CA_(25A)-(25A)-26A	LTE B25	5	26665	1912.5	QPSK	1	24	8665	1992.5	4x4	LTE B25	20	8140	1940	4x4	LTE B26	5	8865	876.5	2x2	-	-	-	-	-	-	-	-	-	-	23.47	23.52
CA_(25A)-25A-41A	LTE B25	5	26665	1912.5	QPSK	1	24	8665	1992.5	4x4	LTE B25	20	8140	1940	2x2	LTE B41	20	40620	2593	2x2	-	-	-	-	-	-	-	-	-	-	23.51	23.52
CA_25A-(25A)-41A	LTE B25	5	26665	1912.5	QPSK	1	24	8665	1992.5	2x2	LTE B25	20	8140	1940	4x4	LTE B41	20	40620	2593	2x2	-	-	-	-	-	-	-	-	-	-	23.44	23.52
CA_25A-25A-(41A)	LTE B25	5	26665	1912.5	QPSK	1	24	8665	1992.5	2x2	LTE B25	20	8140	1940	2x2	LTE B41	20	40620	2593	4x4	-	-	-	-	-	-	-	-	-	-	23.56	23.52
CA_(25A)-25A-(41A)	LTE B25	5	26665	1912.5	QPSK	1	24	8665	1992.5	4x4	LTE B25	20	8140	1940	2x2	LTE B41	20	40620	2593	4x4	-	-	-	-	-	-	-	-	-	-	23.45	23.52
CA_(25A)-(25A)-(41A)	LTE B25	5	26665	1912.5	QPSK	1	24	8665	1992.5	2x2	LTE B25	20	8140	1940	4x4	LTE B41	20	40620	2593	4x4	-	-	-	-	-	-	-	-	-	-	23.47	23.52
CA_(25A)-(25A)-41A	LTE B25	5	26665	1912.5	QPSK	1	24	8665	1992.5	4x4	LTE B25	20	8140	1940	4x4	LTE B41	20	40620	2593	2x2	-	-	-	-	-	-	-	-	-	-	23.48	23.52
CA_(25A)-(25A)-(41A)	LTE B25	5	26665	1912.5	QPSK	1	24	8665	1992.5	4x4	LTE B25	20	8140	1940	4x4	LTE B41	20	40620	2593	4x4	-	-	-	-	-	-	-	-	-	-	23.54	23.52
CA_(25A)-26A-41A	LTE B25	5	26665	1912.5	QPSK	1	24	8665	1992.5	4x4	LTE B26	15	8865	876.5	2x2	LTE B41	20	40620	2593	2x2	-	-	-	-	-	-	-	-	-	-	23.54	23.52
CA_25A-26A-(41A)	LTE B25	5	26665	1912.5	QPSK	1	24	8665	1992.5	2x2	LTE B26	15	8865	876.5	2x2	LTE B41	20	40620	2593	4x4	-	-	-	-	-	-	-	-	-	-	23.61	23.52
CA_(25A)-26A-(41A)	LTE B25	5	26665	1912.5	QPSK	1	24	8665	1992.5	4x4	LTE B26	15	8865	876.5	2x2	LTE B41	20	40620	2593	4x4	-	-	-	-	-	-	-	-	-	-	23.50	23.52
CA_[25A]-41C	LTE B25	5	26665	1912.5	QPSK	1	24	8665	1992.5	4x4	LTE B41	20	40620	2593	2x2	LTE B41	20	40422	2573.2	2x2	-	-	-	-	-	-	-	-	-	-	23.40	23.52
CA_25A-[41C]	LTE B25	5	26665	1912.5	QPSK	1	24	8665	1992.5	2x2	LTE B41	20	40620	2593	4x4	LTE B41	20	40422	2573.2	4x4	-	-	-	-	-	-	-	-	-	-	23.46	23.52
CA_[25A]-[41C]	LTE B25	5	26665	1912.5	QPSK	1	24	8665	1992.5	4x4	LTE B41	20	40620	2593	4x4	LTE B41	20	40422	2573.2	4x4	-	-	-	-	-	-	-	-	-	-	23.44	23.52
CA_[25A]-46C	LTE B25	5	26665	1912.5	QPSK	1	24	8665	1992.5	4x4	LTE B46	20	50665	5537.5	2x2	LTE B46	20	50467	5517.7	2x2	-	-	-	-	-	-	-	-	-	-	23.40	23.52
CA_(25A)-25A-41C	LTE B25	5	26665	1912.5	QPSK	1	24	8665	1992.5	4x4	LTE B25	20	8140	1940	2x2	LTE B41	20	40620	2593	2x2	LTE B41	20	40422	2573.2	2x2	-	-	-	-	-	23.53	23.52
CA_25A-(25A)-41C	LTE B25	5	26665	1912.5	QPSK	1	24	8665	1992.5	2x2	LTE B25	20	8140	1940	4x4	LTE B41	20	40620	2593	2x2	LTE B41	20	40422	2573.2	2x2	-	-	-	-	-	23.50	23.52
CA_25A-25A-[41C]	LTE B25	5	26665	1912.5	QPSK	1	24	8665	1992.5	2x2	LTE B25	20	8140	1940	2x2	LTE B41	20	40620	2593	4x4	LTE B41	20	40422	2573.2	4x4	-	-	-	-	-	23.53	23.52
CA_(25A)-(25A)-[41C]	LTE B25	5	26665	1912.5	QPSK	1	24	8665	1992.5	4x4	LTE B25	20	8140	1940	2x2	LTE B41	20	40620	2593	4x4	LTE B41	20	40422	2573.2	4x4	-	-	-	-	-	23.51	23.52
CA_(25A)-25A-[41C]	LTE B25	5	26665	1912.5	QPSK	1	24	8665	1992.5	2x2	LTE B25	20	8140	1940	4x4	LTE B41	20	40620	2593	4x4	LTE B41	20	40422	2573.2	4x4	-	-	-	-	-	23.65	23.52
CA_(25A)-(25A)-[41C]	LTE B25	5	26665	1912.5	QPSK	1	24	8665	1992.5	4x4	LTE B25	20	8140	1940	4x4	LTE B41	20	40620	2593	2x2	LTE B41	20	40422	2573.2	2x2	-	-	-	-	-	23.53	23.52
CA_(25A)-(25A)-[41C]	LTE B25	5	26665	1912.5	QPSK	1	24	8665	1992.5	4x4	LTE B25	20	8140	1940	4x4	LTE B41	20	40620	2593	4x4	LTE B41	20	40422	2573.2	4x4	-	-	-	-	-	23.44	23.52
CA_(25A)-(25A)-41C	LTE B25	5	26665	1912.5	QPSK	1	24	8665	1992.5	4x4	LTE B26	15	8865	876.5	2x2	LTE B41	20	40620	2593	2x2	LTE B41	20	40422	2573.2	2x2	-	-	-	-	-	23.49	23.52
CA_25A-26A-[41C]	LTE B25	5	26665	1912.5	QPSK	1	24	8665	1992.5	2x2	LTE B26	15	8865	876.5	2x2	LTE B41	20	40620	2593	4x4	LTE B41	20	40422	2573.2	4x4	-	-	-	-	-	23.43	23.52
CA_(25A)-26A-[41C]	LTE B25	5	26665	1912.5	QPSK	1	24	8665	1992.5	4x4	LTE B26	15	8865	876.5	2x2	LTE B41	20	40620	2593	4x4	LTE B41	20	40422	2573.2	4x4	-	-	-	-	-	23.51	23.52
CA_[25A]-46D	LTE B25	5	26665	1912.5	QPSK	1	24	8665	1992.5	4x4	LTE B46	20	50665	5537.5	2x2	LTE B46	20	50467	5517.7	2x2	LTE B46	20	50863	5557.3	2x2	-	-	-	-	-	23.40	23.52
CA_(25A)-25A-41D	LTE B25	5	26665	1912.5	QPSK	1	24	8665	1992.5	4x4	LTE B25	20	8140	1940	2x2	LTE B41	20	40422	2573.2	2x2	LTE B41	20	40620	2593	2x2	LTE B41	20	40818	2612.8	2x2	23.50	23.52
CA_25A-(25A)-41D	LTE B25	5	26665	1912.5	QPSK	1	24	8665	1992.5	2x2	LTE B25	20	8140	1940	4x4	LTE B41	20	40422	2573.2	2x2	LTE B41	20	40620	2593	2x2	LTE B41	20	40818	2612.8	2x2	23.47	23.52
CA_25A-25A-[41D]	LTE B25	5	26665	1912.5	QPSK	1	24	8665	1992.5	2x2	LTE B25	20	8140	1940	2x2	LTE B41	20	40422	2573.2	4x4	LTE B41	20	40620	2593	4x4	LTE B41	20	40818	2612.8	4x4	23.43	23.52
CA_(25A)-25A-[41D]	LTE B25	5	26665	1912.5	QPSK	1	24	8665	1992.5	4x4	LTE B25	20	8140	1940	4x4	LTE B41	20	40422	2573.2	4x4	LTE B41	20	40620	2593	4x4	LTE B41	20	40818	2612.8	4x4	23.51	23.52
CA_25A-(25A)-[41D]	LTE B25	5	26665	1912.5	QPSK	1	24	8665	1992.5	2x2	LTE B25	20	8140	1940	4x4	LTE B41	20	40422	2573.2	4x4	LTE B41	20	40620	2593	4x4	LTE B41	20	40818	2612.8	4x4	23.46	23.52
CA_(25A)-(25A)-[41D]	LTE B25	5	26665	1912.5	QPSK	1	24	8665	1992.5	4x4	LTE B25	20	8140	1940	4x4	LTE B41	20	40422	2573.2	4x4	LTE B41	20	40620	2593	4x4	LTE B41	20	40818	2612.8	4x4	23.51	23.52
CA_(25A)-(25A)-[41D]	LTE B25	5	26665	1912.5	QPSK	1	24	8665	1992.5	4x4	LTE B25	20	8140	1940	4x4	LTE B41	20	40422	2573.2	4x4	LTE B41	20	40620	2593	4x4	LTE B41	20	40818	2612.8	4x4	23.52	23.52

© 2020 PCTEST

1.4.10 **LTE Band 30 as PCC**

Table 21
Maximum Output Powers

	PCC									SCC 1					SCC 2					SCC 3					SCC 4					Power	
Combination	PCC Band	PCC BW [MHz]	PCC (UL) Ch.	PCC (UL) Freq. [MHz]	Mod.	PCC UL# RB	PCC UL RB Offset	PCC (DL) Ch.	PCC (DL) Freq. [MHz]	SCC Band	SCC BW [MHz]	SCC (DL) Ch.	SCC (DL) Freq. [MHz]	DL Ant. Config.	SCC Band	SCC BW [MHz]	SCC (DL) Ch.	SCC (DL) Freq. [MHz]	DL Ant. Config.	SCC Band	SCC BW [MHz]	SCC (DL) Ch.	SCC (DL) Freq. [MHz]	DL Ant. Config.	SCC Band	SCC BW [MHz]	SCC (DL) Ch.	SCC (DL) Freq. [MHz]	DL Ant. Config.	LTE Tx.Power with DL CA Enabled (dBm)	LTE Single Carrier Tx Power (dBm)
CA_[2A]-2A-29A-30A	LTE B30	10	27710	2310	QPSK	1	0	9820	2355	2x2	LTE B2	20	900	1960	4x4	LTE B2	20	700	1940	2x2	LTE B29	10	9715	722.5	2x2	-	-	-	-	-	23.78	23.79
CA_2A-2A-29A-[30A]	LTE B30	10	27710	2310	QPSK	1	0	9820	2355	4x4	LTE B2	20	900	1960	2x2	LTE B2	20	700	1940	2x2	LTE B29	10	9715	722.5	2x2	-	-	-	-	-	23.99	23.79
CA_[2A]-[2A]-29A-30A	LTE B30	10	27710	2310	QPSK	1	0	9820	2355	2x2	LTE B2	20	900	1960	4x4	LTE B2	20	700	1940	4x4	LTE B29	10	9715	722.5	2x2	-	-	-	-	-	23.84	23.79
CA_[2A]-[2A]-29A-[30A]	LTE B30	10	27710	2310	QPSK	1	0	9820	2355	4x4	LTE B2	20	900	1960	4x4	LTE B2	20	700	1940	2x2	LTE B29	10	9715	722.5	2x2	-	-	-	-	-	23.94	23.79
CA_[2A]-[2A]-29A-[30A]	LTE B30	10	27710	2310	QPSK	1	0	9820	2355	4x4	LTE B2	20	900	1960	4x4	LTE B2	20	700	1940	4x4	LTE B29	10	9715	722.5	2x2	-	-	-	-	-	24.01	23.79
CA_[2A]-29A-30A-66A	LTE B30	10	27710	2310	QPSK	1	0	9820	2355	2x2	LTE B2	20	900	1960	4x4	LTE B29	10	9715	722.5	2x2	LTE B66	20	66786	2145	2x2	-	-	-	-	-	22.71	23.79
CA_2A-29A-[30A]-66A	LTE B30	10	27710	2310	QPSK	1	0	9820	2355	4x4	LTE B2	20	900	1960	2x2	LTE B29	10	9715	722.5	2x2	LTE B66	20	66786	2145	2x2	-	-	-	-	-	23.83	23.79
CA_2A-29A-30A-[66A]	LTE B30	10	27710	2310	QPSK	1	0	9820	2355	2x2	LTE B2	20	900	1960	2x2	LTE B29	10	9715	722.5	2x2	LTE B66	20	66786	2145	4x4	-	-	-	-	-	23.81	23.79
CA_[2A]-29A-[30A]-66A	LTE B30	10	27710	2310	QPSK	1	0	9820	2355	4x4	LTE B2	20	900	1960	4x4	LTE B29	10	9715	722.5	2x2	LTE B66	20	66786	2145	2x2	-	-	-	-	-	23.91	23.79
CA_[2A]-29A-30A-[66A]	LTE B30	10	27710	2310	QPSK	1	0	9820	2355	2x2	LTE B2	20	900	1960	4x4	LTE B29	10	9715	722.5	2x2	LTE B66	20	66786	2145	4x4	-	-	-	-	-	23.89	23.79
CA_2A-29A-[30A]-[66A]	LTE B30	10	27710	2310	QPSK	1	0	9820	2355	4x4	LTE B2	20	900	1960	2x2	LTE B29	10	9715	722.5	2x2	LTE B66	20	66786	2145	4x4	-	-	-	-	-	23.93	23.79
CA_[2A]-29A-[30A]-[66A]	LTE B30	10	27710	2310	QPSK	1	0	9820	2355	4x4	LTE B2	20	900	1960	4x4	LTE B29	10	9715	722.5	2x2	LTE B66	20	66786	2145	4x4	-	-	-	-	-	23.95	23.79
CA_[2A]-30A-[66A]-[66A]	LTE B30	10	27710	2310	QPSK	1	0	9820	2355	2x2	LTE B2	20	900	1960	4x4	LTE B66	20	66786	2145	4x4	LTE B66	20	67236	2190	4x4	-	-	-	-	-	23.93	23.79
CA_29A-30A-[66A]-66A	LTE B30	10	27710	2310	QPSK	1	0	9820	2355	2x2	LTE B29	10	9715	722.5	2x2	LTE B66	20	66786	2145	4x4	LTE B66	20	67236	2190	2x2	-	-	-	-	-	23.81	23.79
CA_29A-[30A]-[66A]-66A	LTE B30	10	27710	2310	QPSK	1	0	9820	2355	4x4	LTE B29	10	9715	722.5	2x2	LTE B66	20	66786	2145	4x4	LTE B66	20	67236	2190	2x2	-	-	-	-	-	23.82	23.79
CA_29A-[30A]-[66A]-66A	LTE B30	10	27710	2310	QPSK	1	0	9820	2355	4x4	LTE B29	10	9715	722.5	2x2	LTE B66	20	66786	2145	4x4	LTE B66	20	67236	2190	2x2	-	-	-	-	-	23.87	23.79
CA_29A-30A-[66A]-[66A]	LTE B30	10	27710	2310	QPSK	1	0	9820	2355	2x2	LTE B29	10	9715	722.5	2x2	LTE B66	20	66786	2145	4x4	LTE B66	20	67236	2190	4x4	-	-	-	-	-	23.87	23.79
CA_29A-[30A]-[66A]-[66A]	LTE B30	10	27710	2310	QPSK	1	0	9820	2355	4x4	LTE B29	10	9715	722.5	2x2	LTE B66	20	66786	2145	4x4	LTE B66	20	67236	2190	4x4	-	-	-	-	-	23.88	23.79
CA_[2A]-2A-5A-30A-66A	LTE B30	10	27710	2310	QPSK	1	0	9820	2355	2x2	LTE B2	20	900	1960	4x4	LTE B2	20	700	1940	2x2	LTE B5	10	2525	881.5	2x2	LTE B66	20	66786	2145	2x2	23.67	23.79
CA_2A-2A-5A-[30A]-66A	LTE B30	10	27710	2310	QPSK	1	0	9820	2355	4x4	LTE B2	20	900	1960	2x2	LTE B2	20	700	1940	2x2	LTE B5	10	2525	881.5	2x2	LTE B66	20	66786	2145	2x2	23.88	23.79
CA_2A-2A-5A-30A-[66A]	LTE B30	10	27710	2310	QPSK	1	0	9820	2355	2x2	LTE B2	20	900	1960	2x2	LTE B2	20	700	1940	2x2	LTE B5	10	2525	881.5	2x2	LTE B66	20	66786	2145	4x4	23.82	23.79
CA_[2A]-[2A]-5A-30A-66A	LTE B30	10	27710	2310	QPSK	1	0	9820	2355	2x2	LTE B2	20	900	1960	4x4	LTE B2	20	700	1940	4x4	LTE B5	10	2525	881.5	2x2	LTE B66	20	66786	2145	2x2	23.81	23.79
CA_[2A]-2A-5A-30A-66A	LTE B30	10	27710	2310	QPSK	1	0	9820	2355	4x4	LTE B2	20	900	1960	4x4	LTE B2	20	700	1940	2x2	LTE B5	10	2525	881.5	2x2	LTE B66	20	66786	2145	2x2	23.87	23.79
CA_[2A]-2A-5A-[30A]-66A	LTE B30	10	27710	2310	QPSK	1	0	9820	2355	4x4	LTE B2	20	900	1960	4x4	LTE B2	20	700	1940	2x2	LTE B5	10	2525	881.5	2x2	LTE B66	20	66786	2145	4x4	23.73	23.79
CA_2A-2A-5A-[30A]-66A	LTE B30	10	27710	2310	QPSK	1	0	9820	2355	4x4	LTE B2	20	900	1960	2x2	LTE B2	20	700	1940	4x4	LTE B5	10	2525	881.5	2x2	LTE B66	20	66786	2145	4x4	23.86	23.79
CA_[2A]-[2A]-5A-30A-66A	LTE B30	10	27710	2310	QPSK	1	0	9820	2355	4x4	LTE B2	20	900	1960	4x4	LTE B2	20	700	1940	4x4	LTE B5	10	2525	881.5	2x2	LTE B66	20	66786	2145	2x2	23.84	23.79
CA_[2A]-[2A]-5A-30A-[66A]	LTE B30	10	27710	2310	QPSK	1	0	9820	2355	2x2	LTE B2	20	900	1960	4x4	LTE B2	20	700	1940	4x4	LTE B5	10	2525	881.5	2x2	LTE B66	20	66786	2145	4x4	23.77	23.79
CA_[2A]-2A-5A-[30A]-[66A]	LTE B30	10	27710	2310	QPSK	1	0	9820	2355	4x4	LTE B2	20	900	1960	4x4	LTE B2	20	700	1940	2x2	LTE B5	10	2525	881.5	2x2	LTE B66	20	66786	2145	4x4	23.88	23.79
CA_[2A]-[2A]-5A-[30A]-[66A]	LTE B30	10	27710	2310	QPSK	1	0	9820	2355	4x4	LTE B2	20	900	1960	4x4	LTE B2	20	700	1940	4x4	LTE B5	10	2525	881.5	2x2	LTE B66	20	66786	2145	4x4	23.87	23.79
CA_[2A]-2A-12A-30A-66A	LTE B30	10	27710	2310	QPSK	1	0	9820	2355	2x2	LTE B2	20	900	1960	4x4	LTE B2	20	700	1940	2x2	LTE B12	10	5095	737.5	2x2	LTE B66	20	66786	2145	2x2	23.83	23.79
CA_2A-2A-12A-30A-66A	LTE B30	10	27710	2310	QPSK	1	0	9820	2355	4x4	LTE B2	20	900	1960	2x2	LTE B2	20	700	1940	2x2	LTE B12	10	5095	737.5	2x2	LTE B66	20	66786	2145	2x2	23.81	23.79
CA_2A-2A-12A-30A-[66A]	LTE B30	10	27710	2310	QPSK	1	0	9820	2355	2x2	LTE B2	20	900	1960	2x2	LTE B2	20	700	1940	2x2	LTE B12	10	5095	737.5	2x2	LTE B66	20	66786	2145	4x4	23.73	23.79
CA_[2A]-[2A]-12A-30A-66A	LTE B30	10	27710	2310	QPSK	1	0	9820	2355	2x2	LTE B2	20	900	1960	4x4	LTE B2	20	700	1940	2x2	LTE B12	10	5095	737.5	2x2	LTE B66	20	66786	2145	2x2	23.87	23.79
CA_[2A]-[2A]-12A-30A-66A	LTE B30	10	27710	2310	QPSK	1	0	9820	2355	4x4	LTE B2	20	900	1960	4x4	LTE B2	20	700	1940	2x2	LTE B12	10	5095	737.5	2x2	LTE B66	20	66786	2145	4x4	23.75	23.79
CA_[2A]-2A-12A-30A-[66A]	LTE B30	10	27710	2310	QPSK	1	0	9820	2355	4x4	LTE B2	20	900	1960	4x4	LTE B2	20	700	1940	2x2	LTE B12	10	5095	737.5	2x2	LTE B66	20	66786	2145	4x4	23.81	23.79
CA_[2A]-2A-12A-30A-[66A]	LTE B30	10	27710	2310	QPSK	1	0	9820	2355	2x2	LTE B2	20	900	1960	4x4	LTE B2	20	700	1940	4x4	LTE B12	10	5095	737.5	2x2	LTE B66	20	66786	2145	4x4	23.73	23.79
CA_[2A]-2A-12A-[30A]-66A	LTE B30	10	27710	2310	QPSK	1	0	9820	2355	4x4	LTE B2	20	900	1960	2x2	LTE B2	20	700	1940	2x2	LTE B12	10	5095	737.5	2x2	LTE B66	20	66786	2145	4x4	23.84	23.79
CA_[2A]-[2A]-12A-[30A]-66A	LTE B30	10	27710	2310	QPSK	1	0	9820	2355	4x4	LTE B2	20	900	1960	4x4	LTE B2	20	700	1940	4x4	LTE B12	10	5095	737.5	2x2	LTE B66	20	66786	2145	4x4	23.85	23.79
CA_[2A]-2A-14A-30A-66A	LTE B30	10	27710	2310	QPSK	1	0	9820	2355	2x2	LTE B2	20	900	1960	4x4	LTE B2	20	700	1940	2x2	LTE B14	10	5330	763	2x2	LTE B66	20	66786	2145	2x2	23.77	23.79
CA_2A-2A-14A-[30A]-66A	LTE B30	10	27710	2310	QPSK	1	0	9820	2355	4x4	LTE B2	20	900	1960	2x2	LTE B2	20	700	1940	2x2	LTE B14	10	5330	763	2x2	LTE B66	20	66786	2145	2x2	23.81	23.79
CA_2A-2A-14A-30A-[66A]	LTE B30	10	27710	2310	QPSK	1	0	9820	2355	2x2	LTE B2	20	900	1960	2x2	LTE B2	20	700	1940	2x2	LTE B14	10	5330	763	2x2	LTE B66	20	66786	2145	4x4	23.77	23.79
CA_[2A]-[2A]-14A-30A-66A	LTE B30	10	27710	2310	QPSK	1	0	9820	2355	2x2	LTE B2	20	900	1960	4x4	LTE B2	20	700	1940	4x4	LTE B14	10	5330	763	2x2	LTE B66	20	66786	2145	2x2	23.79	23.79
CA_[2A]-2A-14A-[30A]-66A	LTE B30	10	27710	2310	QPSK	1	0	9820	2355	4x4	LTE B2	20	900	1960	2x2	LTE B2	20	700	1940	2x2	LTE B14	10	5330	763	2x2	LTE B66	20	66786	2145	2x2	23.84	23.79
CA_[2A]-2A-14A-[30A]-[66A]	LTE B30	10	27710	2310	QPSK	1	0	9820	2355	4x4	LTE B2	20	900	1960	4x4	LTE B2	20	700	1940	2x2	LTE B14	10	5330	763	2x2	LTE B66	20	66786	2145	4x4	23.80	23.79
CA_2A-2A-14A-[30A]-[66A]	LTE B30	10	27710	2310	QPSK	1	0	9820	2355	4x4	LTE B2	20	900	1960	2x2	LTE B2	20	700	1940	2x2	LTE B14	10	5330	763	2x2	LTE B66	20	66786	2145	4x4	23.75	23.79
CA_[2A]-[2A]-14A-[30A]-[66A]	LTE B30	10	27710	2310	QPSK	1	0	9820	2355	4x4	LTE B2	20	900	1960	4x4	LTE B2	20	700	1940	4x4	LTE B14	10	5330	763	2x2	LTE B66	20	66786	2145	4x4	23.77	23.79
CA_[2A]-[2A]-14A-30A-[66A]	LTE B30	10	27710	2310	QPSK	1	0	9820	2355	2x2	LTE B2	20	900	1960	4x4	LTE B2	20	700	1940	4x4	LTE B14	10	5330	763	2x2	LTE B66	20	66786	2145	4x4	23.79	23.79
CA_[2A]-2A-14A-[30A]-[66A]	LTE B30	10	27710	2310	QPSK	1	0	9820	2355	4x4	LTE B2	20	900	1960	4x4	LTE B2	20	700	1940	2x2	LTE B14	10	5330	763	2x2	LTE B66	20	66786	2145	4x4	23.79	23.79
CA_[2A]-[2A]-14A-[30A]-[66A]	LTE B30	10	27710	2310	QPSK	1	0	9820	2355	4x4	LTE B2	20	900	1960	4x4	LTE B2	20	700	1940	4x4	LTE B14	10	5330	763	2x2	LTE B66	20	66786	2145	4x4	23.72	23.79
CA_[2A]-5A-30A-66A-66A	LTE B30	10	27710	2310	QPSK	1	0	9820	2355	2x2	LTE B2	20	900	1960	2x2	LTE B5	10	2525	881.5	2x2	LTE B66	20	66786	2145	2x2	LTE B66	20	67236	2190	2x2	23.79	23.79
CA_2A-5A-[30A]-66A-66A	LTE B30	10	27710	2310	QPSK	1	0	9820	2355	4x4	LTE B2	20	900	1960	2x2	LTE B5	10	2525	881.5	2x2	LTE B66	20	66786	2145	2x2	LTE B66	20	67236	2190	2x2	23.77	23.79
CA_2A-5A-30A-[66A]-66A	LTE B30	10	27710	2310	QPSK	1	0	9820	2355	2x2	LTE B2	20	900	1960	2x2	LTE B5	10	2525	881.5	2x2	LTE B66	20	66786	2145	4x4	LTE B66	20	67236	2190	2x2	23.85	23.79
CA_[2A]-5A-30A-66A-66A	LTE B30	10	27710	2310	QPSK	1	0	9820	2355	4x4	LTE B2	20	900	1960	4x4	LTE B5	10	2525	881.5	2x2	LTE B66	20	66786	2145	2x2	LTE B66	20	67236	2190	2x2	23.75	23.79
CA_[2A]-5A-30A-[66A]-66A	LTE B30	10	27710	2310	QPSK	1	0	9820	2355	2x2	LTE B2	20	900	1960	4x4	LTE B5	10	2525	881.5	2x2	LTE B66	20	66786	2145	4x4	LTE B66	20	67236	2190	2x2	23.75	23.79
CA_2A-5A-[30A]-[66A]-66A	LTE B30	10	27710	2310	QPSK	1	0	9820	2355	4x4	LTE B2	20	900	1960	4x4	LTE B5	10	2525	881.5	2x2	LTE B66	20	66786	2145	4x4	LTE B66	20	67236	2190	2x2	23.84	23.79
CA_[2A]-5A-[30A]-[66A]-66A	LTE B30	10	27710	2310	QPSK	1	0	9820	2355	4x4	LTE B2	20	900	1960	4x4	LTE B5	10	2525	881.5	2x2	LTE B66	20	66786	2145	4x4	LTE B66	20	67236	2190	2x2	23.75	23.79
CA_[2A]-5A-[30A]-[66A]-66A	LTE B30	10	27710	2310	QPSK	1	0	9820	2355	4x4	LTE B2	20	900	1960	4x4	LTE B5	10	2525	881.5	2x2	LTE B66	20	66786	2145	4x4	LTE B66	20	67236	2190	2x2	23.75	23.79
CA_[2A]-5A-[30A]-[66A]-[66A]	LTE B30	10	27710	2310	QPSK	1	0	9820	2355	4x4	LTE B2	20	900	1960	4x4	LTE B5	10	2525	881.5	2x2	LTE B66	20	66786	2145	4x4	LTE B66	20	67236	2190	4x4	23.76	23.79
CA_[2A]-5A-[30A]-[66A]-[66A]	LTE B30	10	27710	2310	QPSK	1	0	9820	2355	4x4	LTE B2	20	900	1960	4x4	LTE B5	10	2525	881.5	2x2	LTE B66	20	66786	2145	4x4	LTE B66	20	67236	2190	4x4	23.88	23.79
CA_[2A]-5B-30A-66A	LTE B30	10	27710	2310	QPSK	1	0	9820	2355	2x2	LTE B2	20	900	1960	2x2	LTE B5	10	2525	881.5	2x2	LTE B5	5	2453	874.3	2x2	LTE B66	20	66786	2145	2x2	23.68	23.79
CA_2A-5B-[30A]-66A	LTE B30	10	27710	2310	QPSK	1	0	9820	2355	4x4	LTE B2	20	900	1960	2x2	LTE B5	10	2525	881.5	2x2	LTE B5	5	2453	874.3	2x2	LTE B66	20	66786	2145	2x2	23.91	23.79
CA_2A-5B-30A-[66A]	LTE B30	10	27710	2310	QPSK	1	0	9820	2355	2x2	LTE B2	20	900	1960	2x2	LTE B5	10	2525	881.5	2x2	LTE B5	5	2453	874.3	2x2	LTE B66	20	66786	2145	4x4	23.61	23.79
CA_[2A]-5B-[30A]-66A	LTE B30	10	27710	2310	QPSK	1	0	9820	2355	4x4	LTE B2	20	900	1960	4x4	LTE B5	10	2525	881.5	2x2	LTE B5	5	2453	874.3	2x2	LTE B66	20	66786	2145	2x2	23.95	23.79
CA_[2A]-5B-30A-[66A]	LTE B30	10	27710	2310	QPSK	1	0	9820	2355	2x2	LTE B2	20	900	1960	4x4	LTE B5	10	2525	881.5	2x2	LTE B5	5	2453	874.3	2x2	LTE B66	20	66786	2145	4x4	23.83	23.79
CA_2A-5B-[30A]-[66A]	LTE B30	10	27710	2310	QPSK	1	0	9820	2355	4x4	LTE B2	20	900	1960	4x4	LTE B5	10	2525	881.5	2x2	LTE B5	5	2453	874.3	2x2	LTE B66	20	66786	2145	4x4	23.84	23.79
CA_[2A]-5B-[30A]-[66A]	LTE B30	10	27710	2310	QPSK	1	0	9820	2355	4x4	LTE B2	20	900	1960	4x4	LTE B5	10	2525	881.5	2x2	LTE B5	5	2453	874.3	2x2	LTE B66	20	66786	2145	4x4	23.78	23.79
CA_[2A]-12A-30A-66A-66A	LTE B30	10	27710	2310	QPSK	1	0	9820	2355	2x2	LTE B2	20	900	1960	4x4	LTE B12	10	5095	737.5	2x2	LTE B66	20	66786	2145	2x2	LTE B66	20	67236	2190	2x2	23.64	23.79
CA_2A-12A-[30A]-66A-66A	LTE B30	10	27710	2310	QPSK	1	0	9820	2355	4x4	LTE B2	20	900	1960	2x2	LTE B12	10	5095	737.5	2x2	LTE B66	20	66786	2145	2x2	LTE B66	20	67236	2190	2x2	23.77	23.79
CA_2A-12A-30A-[66A]-66A	LTE B30	10	27710	2310	QPSK	1	0	9820	2355	2x2	LTE B2	20	900	1960	2x2	LTE B12	10	5095	737.5	2x2	LTE B66	20	66786	2145	4x4	LTE B66	20	67236	2190	2x2	23.79	23.79
CA_[2A]-12A-[30A]-66A-66A	LTE B30	10	27710	2310	QPSK	1	0	9820	2355	4x4	LTE B2	20	900	1960	4x4	LTE B12	10	5095	737.5	2x2	LTE B66	20	66786	2145	2x2	LTE B66	20	67236	2190	2x2	23.75	23.79
CA_[2A]-12A-[30A]-[66A]-66A	LTE B30	10	27710	2310	QPSK	1	0	9820	2355	4x4	LTE B2	20	900	1960	4x4	LTE B12	10	5095	737.5	2x2	LTE B66	20	66786	2145	4x4	LTE B66	20	67236	2190	2x2	23.83	23.79
CA_[2A]-12A-30A-[66A]-66A	LTE B30	10	27710	2310	QPSK	1	0	9820	2355	2x2	LTE B2	20	900	1960	4x4	LTE B12	10	5095	737.5	2x2	LTE B66	20	66786	2145	4x4	LTE B66	20	67236	2190	2x2	23.84	23.79
CA_2A-12A-30A-[66A]-66A	LTE B30	10	27710	2310	QPSK	1	0	9820	2355	4x4	LTE B2	20	900	1960	2x2	LTE B12	10	5095	737.5	2x2	LTE B66	20	66786	2145	4x4	LTE B66	20	67236	2190	2x2	23.71	23.79
CA_[2A]-12A-[30A]-[66A]-66A	LTE B30	10	27710	2310	QPSK	1	0	9820	2355	4x4	LTE B2	20	900	1960	4x4	LTE B12	10	5095	737.5	2x2	LTE B66	20	66786	2145	4x4	LTE B66	20	67236	2190	2x2	23.84	23.79
CA_2A-12A-[30A]-[66A]-66A	LTE B30	10	27710	2310	QPSK	1	0	9820	2355	4x4	LTE B2	20	900	1960	2x2	LTE B12	10	5095	737.5	2x2	LTE B66	20	66786	2145	4x4	LTE B66	20	67236	2190	2x2	23.75	23.79
CA_[2A]-12A-[30A]-[66A]-[66A]	LTE B30	10	27710	2310	QPSK	1	0	9820	2355	4x4	LTE B2	20	900	1960	2x2	LTE B12	10	5095	737.5	2x2	LTE B66	20	66786	2145	4x4	LTE B66	20	67236	2190	2x2	23.83	23.79
CA_[2A]-14A-30A-66A-66A	LTE B30	10	27710	2310	QPSK	1	0	9820	2355	2x2	LTE B2	20	900	1960	4x4	LTE B14	10	5330	763	2x2	LTE B66	20	66786	2145	2x2	LTE B66	20	67236	2190	2x2	23.87	23.79
CA_2A-14A-30A-[66A]-66A	LTE B30	10	27710	2310	QPSK	1	0	9820	2355	4x4	LTE B2	20	900	1960	2x2	LTE B14	10	5330	763	2x2	LTE B66	20	66786	2145	4x4	LTE B66	20	67236	2190	2x2	23.87	23.79
CA_[2A]-14A-30A-66A-66A	LTE B30	10	27710	2310	QPSK	1	0	9820	2355	4x4	LTE B2	20	900	1960	2x2	LTE B14	10	5330	763	2x2	LTE B66	20	66786	2145	4x4	LTE B66	20	67236	2190	2x2	23.83	23.79
CA_2A-14A-30A-[66A]-66A	LTE B30	10	27710	2310	QPSK	1	0	9820	2355	4x4	LTE B2	20	900	1960	2x2	LTE B14	10	5330	763	2x2	LTE B66	20	66786	2145	4x4	LTE B66	20	67236	2190	2x2	23.86	23.79
CA_2A-14A-30A-66A-[66A]	LTE B30	10	27710	2310	QPSK	1	0	9820	2355	2x2	LTE B2	20	900	1960	2x2	LTE B14	10	5330	763	2x2	LTE B66	20	66786	2145	4x4	LTE B66	20	67236	2190	4x4	23.81	23.79
CA_[2A]-14A-[30A]-[66A]-66A	LTE B30	10	27710	2310	QPSK	1	0	9820	2355	4x4	LTE B2	20	900	1960	4x4	LTE B14	10	5330	763	2x2	LTE B66	20	66786	2145	4x4	LTE B66	20	67236	2190	2x2

1.4.11 LTE Band 41 as PCC

Table 22
Maximum Output Powers

	PCC										SCC 1					SCC 2					SCC 3					SCC 4					Power	
Combination	PCC Band	PCC BW [MHz]	PCC (UL) Ch.	PCC (UL) Freq. [MHz]	Mod.	PCC UL# RB	PCC UL RB Offset	PCC (DL) Ch.	PCC (DL) Freq. [MHz]	DL Ant. Config.	SCC Band	SCC BW [MHz]	SCC (DL) Ch.	SCC (DL) Freq. [MHz]	DL Ant. Config.	SCC Band	SCC BW [MHz]	SCC (DL) Ch.	SCC (DL) Freq. [MHz]	DL Ant. Config.	SCC Band	SCC BW [MHz]	SCC (DL) Ch.	SCC (DL) Freq. [MHz]	DL Ant. Config.	SCC Band	SCC BW [MHz]	SCC (DL) Ch.	SCC (DL) Freq. [MHz]	DL Ant. Config.	LTE Tx.Power with DL CA Enabled (dBm)	LTE Single Carrier Tx Power (dBm)
CA_41A)-41A (1)	LTE B41	10	40620	2593	QPSK	1	25	40620	2593	4x4	LTE B41	20	41490	2680	2x2	-	-	-	-	-	-	-	-	-	-	-	-	-	-	-	24.81	24.60
CA_41A)-41A) (1)	LTE B41	10	40620	2593	QPSK	1	25	40620	2593	2x2	LTE B41	20	41490	2680	4x4	-	-	-	-	-	-	-	-	-	-	-	-	-	-	-	24.84	24.60
CA_41A)-41A) (1)	LTE B41	10	40620	2593	QPSK	1	25	40620	2593	4x4	LTE B41	20	41490	2680	4x4	-	-	-	-	-	-	-	-	-	-	-	-	-	-	-	24.66	24.60
CA_41A)-41C	LTE B41	10	40620	2593	QPSK	1	25	40620	2593	4x4	LTE B41	20	41292	2660.2	2x2	LTE B41	20	41490	2680	2x2	-	-	-	-	-	-	-	-	-	-	24.69	24.60
CA_41C-)41A)	LTE B41	10	40620	2593	QPSK	1	25	40620	2593	2x2	LTE B41	20	40764	2607.4	2x2	LTE B41	20	41490	2680	4x4	-	-	-	-	-	-	-	-	-	-	24.63	24.60
CA_41A-)41C)	LTE B41	10	40620	2593	QPSK	1	25	40620	2593	2x2	LTE B41	20	41292	2660.2	4x4	LTE B41	20	41490	2680	4x4	-	-	-	-	-	-	-	-	-	-	24.75	24.60
CA_41C)-41A	LTE B41	10	40620	2593	QPSK	1	25	40620	2593	4x4	LTE B41	20	40764	2607.4	4x4	LTE B41	20	41490	2680	2x2	-	-	-	-	-	-	-	-	-	-	24.60	24.60
CA_41A)-41C)	LTE B41	10	40620	2593	QPSK	1	25	40620	2593	4x4	LTE B41	20	41292	2660.2	4x4	LTE B41	20	41490	2680	4x4	-	-	-	-	-	-	-	-	-	-	24.68	24.60
CA_41C)-41A)	LTE B41	10	40620	2593	QPSK	1	25	40620	2593	4x4	LTE B41	20	40764	2607.4	4x4	LTE B41	20	41490	2680	4x4	-	-	-	-	-	-	-	-	-	-	24.70	24.60
CA_41A)-41D	LTE B41	10	40620	2593	QPSK	1	25	40620	2593	4x4	LTE B41	20	41094	2640.4	2x2	LTE B41	20	41292	2660.2	2x2	LTE B41	20	41490	2680	2x2	-	-	-	-	-	24.62	24.60
CA_41D-)41A)	LTE B41	10	40620	2593	QPSK	1	25	40620	2593	2x2	LTE B41	20	40476	2578.6	2x2	LTE B41	20	40764	2607.4	2x2	LTE B41	20	41490	2680	4x4	-	-	-	-	-	24.67	24.60
CA_41A-)41D)	LTE B41	10	40620	2593	QPSK	1	25	40620	2593	2x2	LTE B41	20	41094	2640.4	4x4	LTE B41	20	41292	2660.2	4x4	LTE B41	20	41490	2680	4x4	-	-	-	-	-	24.65	24.60
CA_41D)-41A	LTE B41	10	40620	2593	QPSK	1	25	40620	2593	4x4	LTE B41	20	40476	2578.6	4x4	LTE B41	20	40764	2607.4	4x4	LTE B41	20	41490	2680	2x2	-	-	-	-	-	24.65	24.60
CA_41A)-41D)	LTE B41	10	40620	2593	QPSK	1	25	40620	2593	4x4	LTE B41	20	41094	2640.4	4x4	LTE B41	20	41292	2660.2	4x4	LTE B41	20	41490	2680	4x4	-	-	-	-	-	24.71	24.60
CA_41D)-41A)	LTE B41	10	40620	2593	QPSK	1	25	40620	2593	4x4	LTE B41	20	40476	2578.6	4x4	LTE B41	20	40764	2607.4	4x4	LTE B41	20	41490	2680	4x4	-	-	-	-	-	24.62	24.60
CA_41C)-41C	LTE B41	10	40620	2593	QPSK	1	25	40620	2593	4x4	LTE B41	20	40476	2578.6	4x4	LTE B41	20	41292	2660.2	2x2	LTE B41	20	41490	2680	2x2	-	-	-	-	-	24.60	24.60
CA_41C-)41C)	LTE B41	10	40620	2593	QPSK	1	25	40620	2593	2x2	LTE B41	20	40476	2578.6	2x2	LTE B41	20	41292	2660.2	4x4	LTE B41	20	41490	2680	4x4	-	-	-	-	-	24.63	24.60
CA_41C)-41C)	LTE B41	10	40620	2593	QPSK	1	25	40620	2593	4x4	LTE B41	20	40476	2578.6	4x4	LTE B41	20	41292	2660.2	4x4	LTE B41	20	41490	2680	4x4	-	-	-	-	-	24.63	24.60
CA_41E]	LTE B41	15	40620	2593	QPSK	1	36	40620	2593	4x4	LTE B41	20	40449	2575.9	4x4	LTE B41	20	40791	2610.1	4x4	LTE B41	20	40989	2629.9	4x4	-	-	-	-	-	24.57	24.56
CA_41C)-41D	LTE B41	10	40620	2593	QPSK	1	25	40620	2593	4x4	LTE B41	20	40476	2578.6	4x4	LTE B41	20	41094	2640.4	2x2	LTE B41	20	41292	2660.2	2x2	LTE B41	20	41490	2680	2x2	24.56	24.60
CA_41D-)41C)	LTE B41	10	40620	2593	QPSK	1	25	40620	2593	2x2	LTE B41	20	40476	2578.6	2x2	LTE B41	20	40764	2607.4	2x2	LTE B41	20	41292	2660.2	4x4	LTE B41	20	41490	2680	4x4	24.57	24.60
CA_41C-)41D)	LTE B41	10	40620	2593	QPSK	1	25	40620	2593	2x2	LTE B41	20	40476	2578.6	2x2	LTE B41	20	41094	2640.4	4x4	LTE B41	20	41292	2660.2	4x4	LTE B41	20	41490	2680	4x4	24.64	24.60
CA_41D)-41C	LTE B41	10	40620	2593	QPSK	1	25	40620	2593	4x4	LTE B41	20	40476	2578.6	4x4	LTE B41	20	40764	2607.4	4x4	LTE B41	20	41292	2660.2	2x2	LTE B41	20	41490	2680	2x2	24.59	24.60
CA_41C)-41D)	LTE B41	10	40620	2593	QPSK	1	25	40620	2593	4x4	LTE B41	20	40476	2578.6	4x4	LTE B41	20	41094	2640.4	4x4	LTE B41	20	41292	2660.2	4x4	LTE B41	20	41490	2680	4x4	24.66	24.60
CA_41D)-41C)	LTE B41	10	40620	2593	QPSK	1	25	40620	2593	4x4	LTE B41	20	40476	2578.6	4x4	LTE B41	20	40764	2607.4	4x4	LTE B41	20	41292	2660.2	4x4	LTE B41	20	41490	2680	4x4	24.51	24.60

1.4.12 LTE Band 48 as PCC

Table 23
Maximum Output Powers

	PCC										SCC 1					SCC 2					SCC 3					SCC 4					Power	
Combination	PCC Band	PCC BW [MHz]	PCC (UL) Ch.	PCC (UL) Freq. [MHz]	Mod.	PCC UL# RB	PCC UL RB Offset	PCC (DL) Ch.	PCC (DL) Freq. [MHz]	DL Ant. Config.	SCC Band	SCC BW [MHz]	SCC (DL) Ch.	SCC (DL) Freq. [MHz]	DL Ant. Config.	SCC Band	SCC BW [MHz]	SCC (DL) Ch.	SCC (DL) Freq. [MHz]	DL Ant. Config.	SCC Band	SCC BW [MHz]	SCC (DL) Ch.	SCC (DL) Freq. [MHz]	DL Ant. Config.	SCC Band	SCC BW [MHz]	SCC (DL) Ch.	SCC (DL) Freq. [MHz]	DL Ant. Config.	LTE Tx.Power with DL CA Enabled (dBm)	LTE Single Carrier Tx Power (dBm)
CA_48A-[48A]	LTE B48	5	56232	3649.2	QPSK	1	12	56232	3649.2	2x2	LTE B48	20	55340	3560	4x4	-	-	-	-	-	-	-	-	-	-	-	-	-	-	-	23.41	23.45
CA_48A)-48A	LTE B48	5	56232	3649.2	QPSK	1	12	56232	3649.2	4x4	LTE B48	20	55340	3560	2x2	-	-	-	-	-	-	-	-	-	-	-	-	-	-	-	23.50	23.45
CA_48A)-48A)	LTE B48	5	56232	3649.2	QPSK	1	12	56232	3649.2	4x4	LTE B48	20	55340	3560	4x4	-	-	-	-	-	-	-	-	-	-	-	-	-	-	-	23.47	23.45
CA_48A)-48C	LTE B48	5	56232	3649.2	QPSK	1	12	56232	3649.2	4x4	LTE B48	20	55340	3560	2x2	LTE B48	20	55538	3579.8	2x2	-	-	-	-	-	-	-	-	-	-	23.41	23.45
CA_48C-[48A]	LTE B48	5	56232	3649.2	QPSK	1	12	56232	3649.2	2x2	LTE B48	20	56115	3637.5	2x2	LTE B48	20	55340	3560	4x4	-	-	-	-	-	-	-	-	-	-	23.47	23.45
CA_48A-[48C]	LTE B48	5	56232	3649.2	QPSK	1	12	56232	3649.2	2x2	LTE B48	20	55340	3560	4x4	LTE B48	20	55538	3579.8	4x4	-	-	-	-	-	-	-	-	-	-	23.39	23.45
CA_[48C]-48A	LTE B48	5	56232	3649.2	QPSK	1	12	56232	3649.2	4x4	LTE B48	20	56115	3637.5	4x4	LTE B48	20	55340	3560	2x2	-	-	-	-	-	-	-	-	-	-	23.48	23.45
CA_[48A]-[48C]	LTE B48	5	56232	3649.2	QPSK	1	12	56232	3649.2	4x4	LTE B48	20	55340	3560	4x4	LTE B48	20	55538	3579.8	4x4	-	-	-	-	-	-	-	-	-	-	23.50	23.45
CA_[48C]-[48A]	LTE B48	5	56232	3649.2	QPSK	1	12	56232	3649.2	4x4	LTE B48	20	56115	3637.5	4x4	LTE B48	20	55340	3560	4x4	-	-	-	-	-	-	-	-	-	-	23.49	23.45
CA_[48A)-48D	LTE B48	5	56232	3649.2	QPSK	1	12	56232	3649.2	4x4	LTE B48	20	55340	3560	2x2	LTE B48	20	55538	3579.8	2x2	LTE B48	20	55736	3599.6	2x2	-	-	-	-	-	23.50	23.45
CA_48D-[48A]	LTE B48	5	56232	3649.2	QPSK	1	12	56232	3649.2	2x2	LTE B48	20	56115	3637.5	2x2	LTE B48	20	55917	3617.7	2x2	LTE B48	20	56640	3690	4x4	-	-	-	-	-	23.36	23.45
CA_48A-[48D]	LTE B48	5	56232	3649.2	QPSK	1	12	56232	3649.2	2x2	LTE B48	20	55340	3560	4x4	LTE B48	20	55538	3579.8	4x4	LTE B48	20	55736	3599.6	4x4	-	-	-	-	-	23.41	23.45
CA_[48D]-48A	LTE B48	5	56232	3649.2	QPSK	1	12	56232	3649.2	4x4	LTE B48	20	56115	3637.5	4x4	LTE B48	20	55917	3617.7	4x4	LTE B48	20	56640	3690	2x2	-	-	-	-	-	23.46	23.45
CA_[48A]-[48D]	LTE B48	5	56232	3649.2	QPSK	1	12	56232	3649.2	4x4	LTE B48	20	55340	3560	4x4	LTE B48	20	55538	3579.8	4x4	LTE B48	20	55736	3599.6	4x4	-	-	-	-	-	23.50	23.45
CA_[48D]-[48A]	LTE B48	5	56232	3649.2	QPSK	1	12	56232	3649.2	4x4	LTE B48	20	56115	3637.5	4x4	LTE B48	20	55917	3617.7	4x4	LTE B48	20	56640	3690	4x4	-	-	-	-	-	23.47	23.45
CA_48C-[48C]	LTE B48	5	56232	3649.2	QPSK	1	12	56232	3649.2	2x2	LTE B48	20	56115	3637.5	2x2	LTE B48	20	55340	3560	4x4	LTE B48	20	55538	3579.8	4x4	-	-	-	-	-	23.40	23.45
CA_[48C]-48C	LTE B48	5	56232	3649.2	QPSK	1	12	56232	3649.2	4x4	LTE B48	20	56115	3637.5	4x4	LTE B48	20	55340	3560	2x2	LTE B48	20	55538	3579.8	2x2	-	-	-	-	-	23.47	23.45
CA_[48C]-[48C]	LTE B48	5	56232	3649.2	QPSK	1	12	56232	3649.2	4x4	LTE B48	20	56115	3637.5	4x4	LTE B48	20	55340	3560	4x4	LTE B48	20	55538	3579.8	4x4	-	-	-	-	-	23.44	23.45
CA_[48E]	LTE B48	5	56232	3649.2	QPSK	1	12	56232	3649.2	4x4	LTE B48	20	56115	3637.5	4x4	LTE B48	20	55917	3617.7	4x4	LTE B48	20	55719	3597.9	4x4	-	-	-	-	-	23.50	23.45
CA_[48C)-48D	LTE B48	5	56232	3649.2	QPSK	1	12	56232	3649.2	4x4	LTE B48	20	56115	3637.5	4x4	LTE B48	20	55340	3560	2x2	LTE B48	20	55538	3579.8	2x2	LTE B48	20	55736	3599.6	2x2	23.50	23.45
CA_48D-[48C]	LTE B48	5	56232	3649.2	QPSK	1	12	56232	3649.2	2x2	LTE B48	20	56115	3637.5	2x2	LTE B48	20	55917	3617.7	2x2	LTE B48	20	56640	3690	4x4	LTE B48	20	56442	3670.2	4x4	23.44	23.45
CA_48C-[48D]	LTE B48	5	56232	3649.2	QPSK	1	12	56232	3649.2	2x2	LTE B48	20	56115	3637.5	2x2	LTE B48	20	55340	3560	4x4	LTE B48	20	55538	3579.8	4x4	LTE B48	20	55736	3599.6	4x4	23.43	23.45
CA_[48D)-48C	LTE B48	5	56232	3649.2	QPSK	1	12	56232	3649.2	4x4	LTE B48	20	56115	3637.5	4x4	LTE B48	20	55917	3617.7	4x4	LTE B48	20	56640	3690	2x2	LTE B48	20	56442	3670.2	2x2	23.36	23.45
CA_[48C]-[48D]	LTE B48	5	56232	3649.2	QPSK	1	12	56232	3649.2	4x4	LTE B48	20	56115	3637.5	4x4	LTE B48	20	55340	3560	4x4	LTE B48	20	55538	3579.8	4x4	LTE B48	20	55736	3599.6	4x4	23.44	23.45
CA_[48D)-[48C]	LTE B48	5	56232	3649.2	QPSK	1	12	56232	3649.2	4x4	LTE B48	20	56115	3637.5	4x4	LTE B48	20	55917	3617.7	4x4	LTE B48	20	56640	3690	4x4	LTE B48	20	56442	3670.2	4x4	23.35	23.45
CA_[48F]	LTE B48	5	56232	3649.2	QPSK	1	12	56232	3649.2	4x4	LTE B48	20	56115	3637.5	4x4	LTE B48	20	55917	3617.7	4x4	LTE B48	20	55719	3597.9	4x4	LTE B48	20	55521	3578.1	4x4	23.45	23.45

1.5 Downlink Carrier Aggregation with Uplink Carrier Aggregation enabled

This device supports uplink carrier aggregation (ULCA) with additional Carrier Aggregation configurations active in the downlink. Power measurements were performed with ULCA active and additional CA configurations active in the downlink for the configuration per Fall 2017 TCB Workshop Notes.

Per FCC Guidance, additional SAR measurements for these configurations were not required since their maximum output power was not more than 0.25 dB higher than the maximum output power for with only ULCA active.

1.5.1 DL Carrier Aggregation RF Conducted Powers

Table 24
Maximum Output Powers

	PCC									SCC 1									SCC 2				SCC 3				SCC 4				Power	
Combination	PCC Band	PCC BW [MHz]	PCC (UL) Ch.	PCC (UL) Freq. [MHz]	Mod.	PCC UL# RB	PCC UL RB Offset	PCC (DL) Channel	PCC (DL) Freq. [MHz]	SCC Band	SCC BW [MHz]	SCC (UL) Ch.	SCC (UL) Freq. [MHz]	Mod.	SCC UL# RB	SCC UL RB Offset	SCC (DL) Channel	SCC (DL) Freq. [MHz]	SCC Band	SCC BW [MHz]	SCC (DL) Channel	SCC (DL) Freq. [MHz]	SCC Band	SCC BW [MHz]	SCC (DL) Channel	SCC (DL) Freq. [MHz]	SCC Band	SCC BW [MHz]	SCC (DL) Channel	SCC (DL) Freq. [MHz]	ULCA Tx.Power with add'l CA config. active (dBm)	ULCA Tx Power (dBm)
CA_41C-41A	LTE B41	20	39750	2506	QPSK	1	99	39750	2506	LTE B41	20	39948	2525.8	QPSK	1	0	39948	2525.8	LTE B41	20	41490	2680	-	-	-	-	-	-	-	-	24.77	24.75
CA_41D	LTE B41	20	39750	2506	QPSK	1	99	39750	2506	LTE B41	20	39948	2525.8	QPSK	1	0	39948	2525.8	LTE B41	20	40146	2545.6					-	-	-	-	24.78	24.75
CA_41D-41A	LTE B41	20	39750	2506	QPSK	1	99	39750	2506	LTE B41	20	39948	2525.8	QPSK	1	0	39948	2525.8	LTE B41	20	40146	2545.6	LTE B41	20	41490	2680	-	-	-	-	24.77	24.75
CA_41C-41C	LTE B41	20	39750	2506	QPSK	1	99	39750	2506	LTE B41	20	39948	2525.8	QPSK	1	0	39948	2525.8	LTE B41	20	41292	2660.2	LTE B41	20	41490	2680	-	-	-	-	24.73	24.75
CA_41E	LTE B41	20	39750	2506	QPSK	1	99	39750	2506	LTE B41	20	39948	2525.8	QPSK	1	0	39948	2525.8	LTE B41	20	40146	2545.6	LTE B41	20	40344	2565.4	-	-	-	-	24.58	24.75
CA_41C-41D	LTE B41	20	39750	2506	QPSK	1	99	39750	2506	LTE B41	20	39948	2525.8	QPSK	1	0	39948	2525.8	LTE B41	20	41094	2640.4	LTE B41	20	41292	2660.2	LTE B41	20	41490	2680	24.82	24.75
CA_41D-41C	LTE B41	20	39750	2506	QPSK	1	99	39750	2506	LTE B41	20	39948	2525.8	QPSK	1	0	39948	2525.8	LTE B41	20	40146	2545.6	LTE B41	20	41292	2660.2	LTE B41	20	41490	2680	24.74	24.75

1.5.2 DL Carrier Aggregation with DL 4x4 MIMO RF Conducted Powers

Note: 4x4 DL MIMO is only operating in the downlink. Uplink transmission is limited to a single output stream for each component carrier of ULCA.

Table 25
Maximum Output Powers

	PCC									SCC 1									SCC 2				SCC 3				SCC 4				Power	
Combination	PCC Band	PCC BW [MHz]	PCC (UL) Ch.	PCC (UL) Freq. [MHz]	Mod.	PCC UL# RB	PCC UL RB Offset	PCC (DL) Channel	PCC (DL) Freq. [MHz]	DL Ant. Config.	SCC Band	SCC BW [MHz]	SCC (UL) Ch.	SCC (UL) Freq. [MHz]	Mod.	SCC UL# RB	SCC UL RB Offset	SCC (DL) Ch.	SCC (DL) Freq. [MHz]	DL Ant. Config.	SCC Band	SCC BW [MHz]	SCC (DL) Ch.	SCC (DL) Freq. [MHz]	DL Ant. Config.	SCC Band	SCC BW [MHz]	SCC (DL) Ch.	SCC (DL) Freq. [MHz]	DL Ant. Config.	SCC Band	SCC BW [MHz]	SCC (DL) Ch.	SCC (DL) Freq. [MHz]	DL Ant. Config.	ULCA Tx.Power with add'l CA config. active	ULCA Tx Power (dBm)
CA_41C	LTE B41	20	39750	2506	QPSK	1	99	39750	2506	4x4	LTE B41	20	39948	2525.8	QPSK	1	0	39948	2525.8	4x4	-															24.75	24.75
CA_41C-41A	LTE B41	20	39750	2506	QPSK	1	99	39750	2506	2x2	LTE B41	20	39948	2525.8	QPSK	1	0	39948	2525.8	2x2	LTE B41	20	41490	2680	4x4	-	-	-	-	-	-	-	-	-	-	24.78	24.75
CA_41C1-41A	LTE B41	20	39750	2506	QPSK	1	99	39750	2506	4x4	LTE B41	20	39948	2525.8	QPSK	1	0	39948	2525.8	4x4	LTE B41	20	41490	2680	2x2	-	-	-	-	-	-	-	-	-	-	24.90	24.75
CA_41C1-41A	LTE B41	20	39750	2506	QPSK	1	99	39750	2506	4x4	LTE B41	20	39948	2525.8	QPSK	1	0	39948	2525.8	4x4	LTE B41	20	41490	2680	4x4	-	-	-	-	-	-	-	-	-	-	24.73	24.75
CA_41D	LTE B41	20	39750	2506	QPSK	1	99	39750	2506	4x4	LTE B41	20	39948	2525.8	QPSK	1	0	39948	2525.8	4x4	LTE B41	20	40146	2545.6	4x4	-	-	-	-	-	-	-	-	-	-	24.38	24.75
CA_41D-41A	LTE B41	20	39750	2506	QPSK	1	99	39750	2506	2x2	LTE B41	20	39948	2525.8	QPSK	1	0	39948	2525.8	2x2	LTE B41	20	40146	2545.6	2x2	LTE B41	20	41490	2680	4x4	-	-	-	-	-	24.76	24.75
CA_41D1-41A	LTE B41	20	39750	2506	QPSK	1	99	39750	2506	4x4	LTE B41	20	39948	2525.8	QPSK	1	0	39948	2525.8	4x4	LTE B41	20	40146	2545.6	4x4	LTE B41	20	41490	2680	2x2	-	-	-	-	-	24.91	24.75
CA_41D1-41A	LTE B41	20	39750	2506	QPSK	1	99	39750	2506	4x4	LTE B41	20	39948	2525.8	QPSK	1	0	39948	2525.8	4x4	LTE B41	20	40146	2545.6	4x4	LTE B41	20	41490	2680	4x4	-	-	-	-	-	24.87	24.75
CA_41C1-41C	LTE B41	20	39750	2506	QPSK	1	99	39750	2506	4x4	LTE B41	20	39948	2525.8	QPSK	1	0	39948	2525.8	4x4	LTE B41	20	41292	2660.2	2x2	LTE B41	20	41490	2680	2x2	-	-	-	-	-	24.84	24.75
CA_41C-41C1	LTE B41	20	39750	2506	QPSK	1	99	39750	2506	2x2	LTE B41	20	39948	2525.8	QPSK	1	0	39948	2525.8	2x2	LTE B41	20	41292	2660.2	4x4	LTE B41	20	41490	2680	4x4	-	-	-	-	-	24.76	24.75
CA_41C1-41C1	LTE B41	20	39750	2506	QPSK	1	99	39750	2506	4x4	LTE B41	20	39948	2525.8	QPSK	1	0	39948	2525.8	4x4	LTE B41	20	41292	2660.2	4x4	LTE B41	20	41490	2680	4x4	-	-	-	-	-	24.92	24.75
CA_41E	LTE B41	20	39750	2506	QPSK	1	99	39750	2506	4x4	LTE B41	20	39948	2525.8	QPSK	1	0	39948	2525.8	4x4	LTE B41	20	40146	2545.6	4x4	LTE B41	20	40344	2565.4	4x4	-	-	-	-	-	24.83	24.75
CA_41C1-41D	LTE B41	20	39750	2506	QPSK	1	99	39750	2506	4x4	LTE B41	20	39948	2525.8	QPSK	1	0	39948	2525.8	4x4	LTE B41	20	41094	2640.4	2x2	LTE B41	20	41292	2660.2	2x2	LTE B41	20	41490	2680	2x2	24.83	24.75
CA_41D-41C1	LTE B41	20	39750	2506	QPSK	1	99	39750	2506	2x2	LTE B41	20	39948	2525.8	QPSK	1	0	39948	2525.8	2x2	LTE B41	20	40146	2545.6	2x2	LTE B41	20	41490	2680	4x4	LTE B41	20	41490	2680	4x4	24.71	24.75
CA_41C-41D1	LTE B41	20	39750	2506	QPSK	1	99	39750	2506	2x2	LTE B41	20	39948	2525.8	QPSK	1	0	39948	2525.8	2x2	LTE B41	20	41094	2640.4	4x4	LTE B41	20	41292	2660.2	4x4	LTE B41	20	41490	2680	4x4	24.83	24.75
CA_41C1-41D1	LTE B41	20	39750	2506	QPSK	1	99	39750	2506	4x4	LTE B41	20	39948	2525.8	QPSK	1	0	39948	2525.8	4x4	LTE B41	20	40146	2545.6	4x4	LTE B41	20	41292	2660.2	2x2	LTE B41	20	41490	2680	2x2	24.77	24.75
CA_41C1-41D1	LTE B41	20	39750	2506	QPSK	1	99	39750	2506	4x4	LTE B41	20	39948	2525.8	QPSK	1	0	39948	2525.8	4x4	LTE B41	20	41094	2640.4	4x4	LTE B41	20	41292	2660.2	4x4	LTE B41	20	41490	2680	4x4	24.74	24.75
CA_41D1-41C1	LTE B41	20	39750	2506	QPSK	1	99	39750	2506	4x4	LTE B41	20	39948	2525.8	QPSK	1	0	39948	2525.8	4x4	LTE B41	20	40146	2545.6	4x4	LTE B41	20	41292	2660.2	4x4	LTE B41	20	41490	2680	4x4	24.78	24.75

	PCC							SCC 1								Power	
Combination	PCC Band	PCC Bandwidth [MHz]	PCC (UL) Channel	PCC (UL) Frequency [MHz]	Modulation	PCC UL# RB	PCC UL RB Offset	PCC (DL) Channel	PCC (DL) Frequency [MHz]	DL Ant. Config.	SCC Band	SCC Bandwidth [MHz]	PCC (UL) Channel	PCC (UL) Frequency [MHz]	Modulation	PCC UL# RB	PCC UL RB Offset	SCC (DL) Channel	SCC (DL) Frequency [MHz]	DL Ant. Config.	ULCA Tx.Power with add'l CA config. active on DL (dBm)	LTE Single Carrier Tx Power (dBm)
CA_[66B]	LTE B66	10	132322	1745	QPSK	1	49	66786	2145	4x4	LTE B66	10	132421	1754.9	QPSK	1	0	66885	2154.9	4x4	23.15	23.15
CA_[66C]	LTE B66	20	132572	1770	QPSK	1	0	67036	2170	4x4	LTE B66	20	132374	1750.2	QPSK	1	99	66838	2150.2	4x4	23.66	23.66

	PCC									SCC 1									SCC 2				SCC 3				SCC 4				Power	
Combination	PCC Band	PCC BW [MHz]	PCC (UL) Ch.	PCC (UL) Freq. [MHz]	Mod.	PCC UL# RB	PCC UL RB Offset	PCC (DL) Ch.	PCC (DL) Freq. [MHz]	DL Ant. Config.	SCC Band	SCC BW [MHz]	SCC (UL) Ch.	SCC (UL) Freq. [MHz]	Mod.	SCC UL# RB	SCC UL RB Offset	SCC (DL) Ch.	SCC (DL) Freq. [MHz]	DL Ant. Config.	SCC Band	SCC BW [MHz]	SCC (DL) Ch.	SCC (DL) Freq. [MHz]	DL Ant. Config.	SCC Band	SCC BW [MHz]	SCC (DL) Ch.	SCC (DL) Freq. [MHz]	DL Ant. Config.	SCC Band	SCC BW [MHz]	SCC (DL) Ch.	SCC (DL) Freq. [MHz]	DL Ant. Config.	ULCA Tx.Power with add'l CA config. active	ULCA Tx Power (dBm)
CA_41C	LTE B41	20	39750	2506	QPSK	1	99	39750	2506	4x4	LTE B41	20	39948	2525.8	QPSK	1	0	39948	2525.8	4x4	-															24.75	24.75
CA_41C-41A	LTE B41	20	39750	2506	QPSK	1	99	39750	2506	2x2	LTE B41	20	39948	2525.8	QPSK	1	0	39948	2525.8	2x2	LTE B41	20	41490	2680	4x4	-	-	-	-	-	-	-	-	-	-	24.78	24.75
CA_41C1-41A	LTE B41	20	39750	2506	QPSK	1	99	39750	2506	4x4	LTE B41	20	39948	2525.8	QPSK	1	0	39948	2525.8	4x4	LTE B41	20	41490	2680	2x2	-	-	-	-	-	-	-	-	-	-	24.90	24.75
CA_41C1-41A	LTE B41	20	39750	2506	QPSK	1	99	39750	2506	4x4	LTE B41	20	39948	2525.8	QPSK	1	0	39948	2525.8	4x4	LTE B41	20	41490	2680	4x4	-	-	-	-	-	-	-	-	-	-	24.73	24.75
CA_41D	LTE B41	20	39750	2506	QPSK	1	99	39750	2506	4x4	LTE B41	20	39948	2525.8	QPSK	1	0	39948	2525.8	4x4	LTE B41	20	40146	2545.6	4x4	-	-	-	-	-	-	-	-	-	-	24.38	24.75
CA_41D-41A	LTE B41	20	39750	2506	QPSK	1	99	39750	2506	2x2	LTE B41	20	39948	2525.8	QPSK	1	0	39948	2525.8	2x2	LTE B41	20	40146	2545.6	2x2	LTE B41	20	41490	2680	4x4	-	-	-	-	-	24.76	24.75
CA_41D1-41A	LTE B41	20	39750	2506	QPSK	1	99	39750	2506	4x4	LTE B41	20	39948	2525.8	QPSK	1	0	39948	2525.8	4x4	LTE B41	20	40146	2545.6	4x4	LTE B41	20	41490	2680	2x2	-	-	-	-	-	24.91	24.75
CA_41D1-41A	LTE B41	20	39750	2506	QPSK	1	99	39750	2506	4x4	LTE B41	20	39948	2525.8	QPSK	1	0	39948	2525.8	4x4	LTE B41	20	40146	2545.6	4x4	LTE B41	20	41490	2680	4x4	-	-	-	-	-	24.87	24.75
CA_41C1-41C	LTE B41	20	39750	2506	QPSK	1	99	39750	2506	4x4	LTE B41	20	39948	2525.8	QPSK	1	0	39948	2525.8	4x4	LTE B41	20	41292	2660.2	2x2	LTE B41	20	41490	2680	2x2	-	-	-	-	-	24.84	24.75
CA_41C-41C1	LTE B41	20	39750	2506	QPSK	1	99	39750	2506	2x2	LTE B41	20	39948	2525.8	QPSK	1	0	39948	2525.8	2x2	LTE B41	20	41292	2660.2	4x4	LTE B41	20	41490	2680	4x4	-	-	-	-	-	24.76	24.75
CA_41C1-41C1	LTE B41	20	39750	2506	QPSK	1	99	39750	2506	4x4	LTE B41	20	39948	2525.8	QPSK	1	0	39948	2525.8	4x4	LTE B41	20	41292	2660.2	4x4	LTE B41	20	41490	2680	4x4	-	-	-	-	-	24.92	24.75
CA_41E	LTE B41	20	39750	2506	QPSK	1	99	39750	2506	4x4	LTE B41	20	39948	2525.8	QPSK	1	0	39948	2525.8	4x4	LTE B41	20	40146	2545.6	4x4	LTE B41	20	40344	2565.4	4x4	-	-	-	-	-	24.83	24.75
CA_41C1-41D	LTE B41	20	39750	2506	QPSK	1	99	39750	2506	4x4	LTE B41	20	39948	2525.8	QPSK	1	0	39948	2525.8	4x4	LTE B41	20	41094	2640.4	2x2	LTE B41	20	41292	2660.2	2x2	LTE B41	20	41490	2680	2x2	24.83	24.75
CA_41D-41C1	LTE B41	20	39750	2506	QPSK	1	99	39750	2506	2x2	LTE B41	20	39948	2525.8	QPSK	1	0	39948	2525.8	2x2	LTE B41	20	40146	2545.6	2x2	LTE B41	20	41490	2680	4x4	LTE B41	20	41490	2680	4x4	24.71	24.75
CA_41C-41D1	LTE B41	20	39750	2506	QPSK	1	99	39750	2506	2x2	LTE B41	20	39948	2525.8	QPSK	1	0	39948	2525.8	2x2	LTE B41	20	41094	2640.4	4x4	LTE B41	20	41292	2660.2	4x4	LTE B41	20	41490	2680	4x4	24.83	24.75
CA_41C1-41D1	LTE B41	20	39750	2506	QPSK	1	99	39750	2506	4x4	LTE B41	20	39948	2525.8	QPSK	1	0	39948	2525.8	4x4	LTE B41	20	40146	2545.6	4x4	LTE B41	20	41292	2660.2	2x2	LTE B41	20	41490	2680	2x2	24.77	24.75
CA_41C1-41D1	LTE B41	20	39750	2506	QPSK	1	99	39750	2506	4x4	LTE B41	20	39948	2525.8	QPSK	1	0	39948	2525.8	4x4	LTE B41	20	41094	2640.4	4x4	LTE B41	20	41292	2660.2	4x4	LTE B41	20	41490	2680	4x4	24.74	24.75
CA_41D1-41C1	LTE B41	20	39750	2506	QPSK	1	99	39750	2506	4x4	LTE B41	20	39948	2525.8	QPSK	1	0	39948	2525.8	4x4	LTE B41	20	40146	2545.6	4x4	LTE B41	20	41292	2660.2	4x4	LTE B41	20	41490	2680	4x4	24.78	24.75

	PCC							SCC 1								Power	
Combination	PCC Band	PCC Bandwidth [MHz]	PCC (UL) Channel	PCC (UL) Frequency [MHz]	Modulation	PCC UL# RB	PCC UL RB Offset	PCC (DL) Channel	PCC (DL) Frequency [MHz]	DL Ant. Config.	SCC Band	SCC Bandwidth [MHz]	PCC (UL) Channel	PCC (UL) Frequency [MHz]	Modulation	PCC UL# RB	PCC UL RB Offset	SCC (DL) Channel	SCC (DL) Frequency [MHz]	DL Ant. Config.	ULCA Tx.Power with add'l CA config. active on DL (dBm)	LTE Single Carrier Tx Power (dBm)
CA_[48C]	LTE B48	20	56207	3646.7	QPSK	1	0	56207	3646.7	4x4	LTE B48	20	56009	3626.9	QPSK	1	99	56009	3626.9	4x4	23.49	23.50

© 2020 PCTEST