Draft 6.1
Only for
Approval

# User manual

# SM-R750A
# SM-R750T
# SM-R750W

# Samsung GALAXY Gear™

## QUICK REFERENCE MANUAL

SAMSUNG

# Support

This guide provides you with the information you need to get started. For more information and additional support, please visit the Samsung.com support page:

- Get support for your device online.
- Review your device's User Manual and troubleshooting FAQs.
- Review troubleshooting solutions.

**NOTE:** Devices and software are constantly evolving—the screen images and icons you see here are for reference only.

**NOTE:** This device should only be used with firmware versions that have been approved for use by the carrier and the device manufacturer. If unauthorized firmware is placed on the device it will not function.

For a list of compatible smartphones, please visit:
www.samsung.com/us/galaxygearsupport

# Device Functions

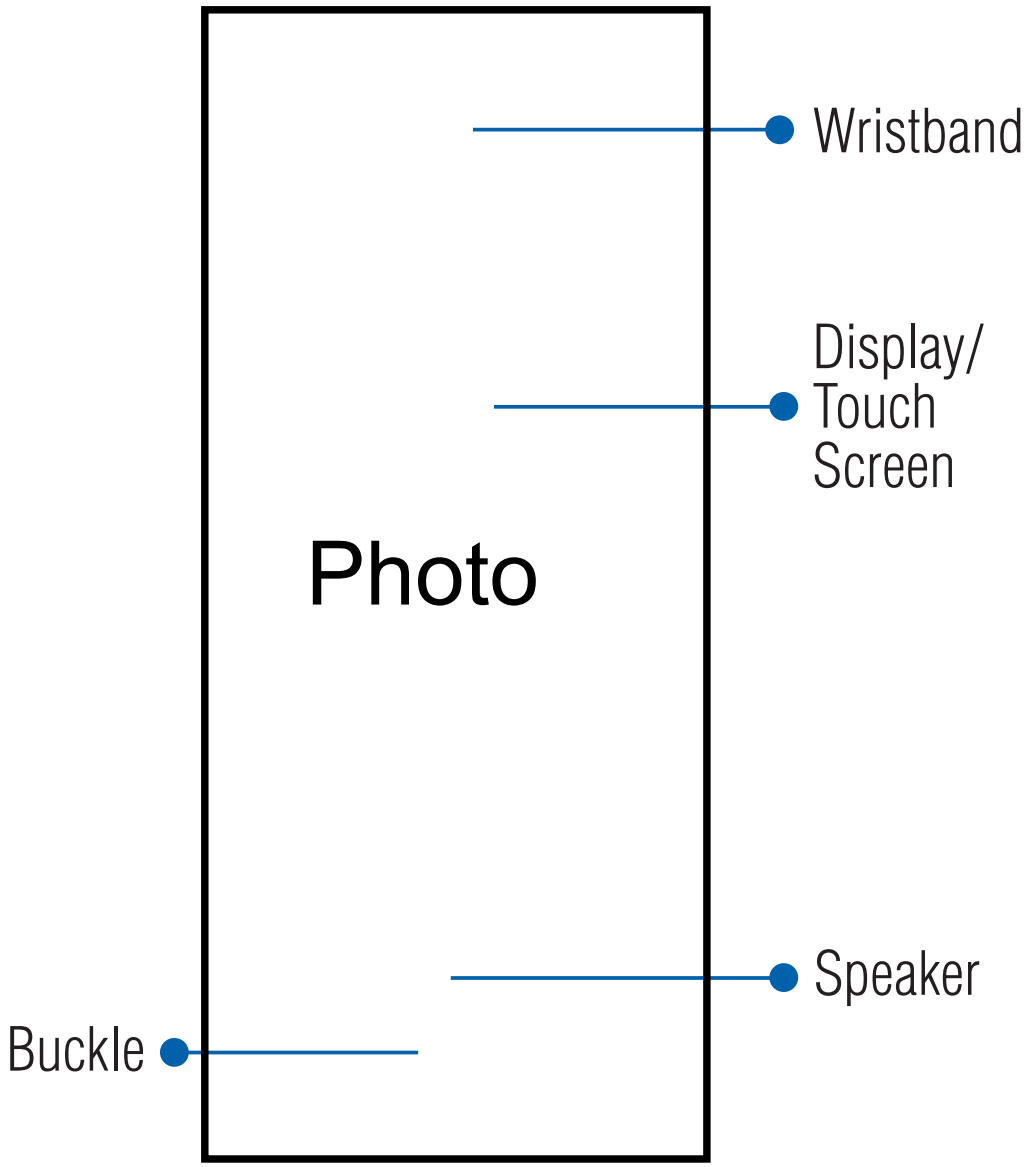


**NOTE:** Swipe down on the display screen to go back from your current on-screen application or menu.

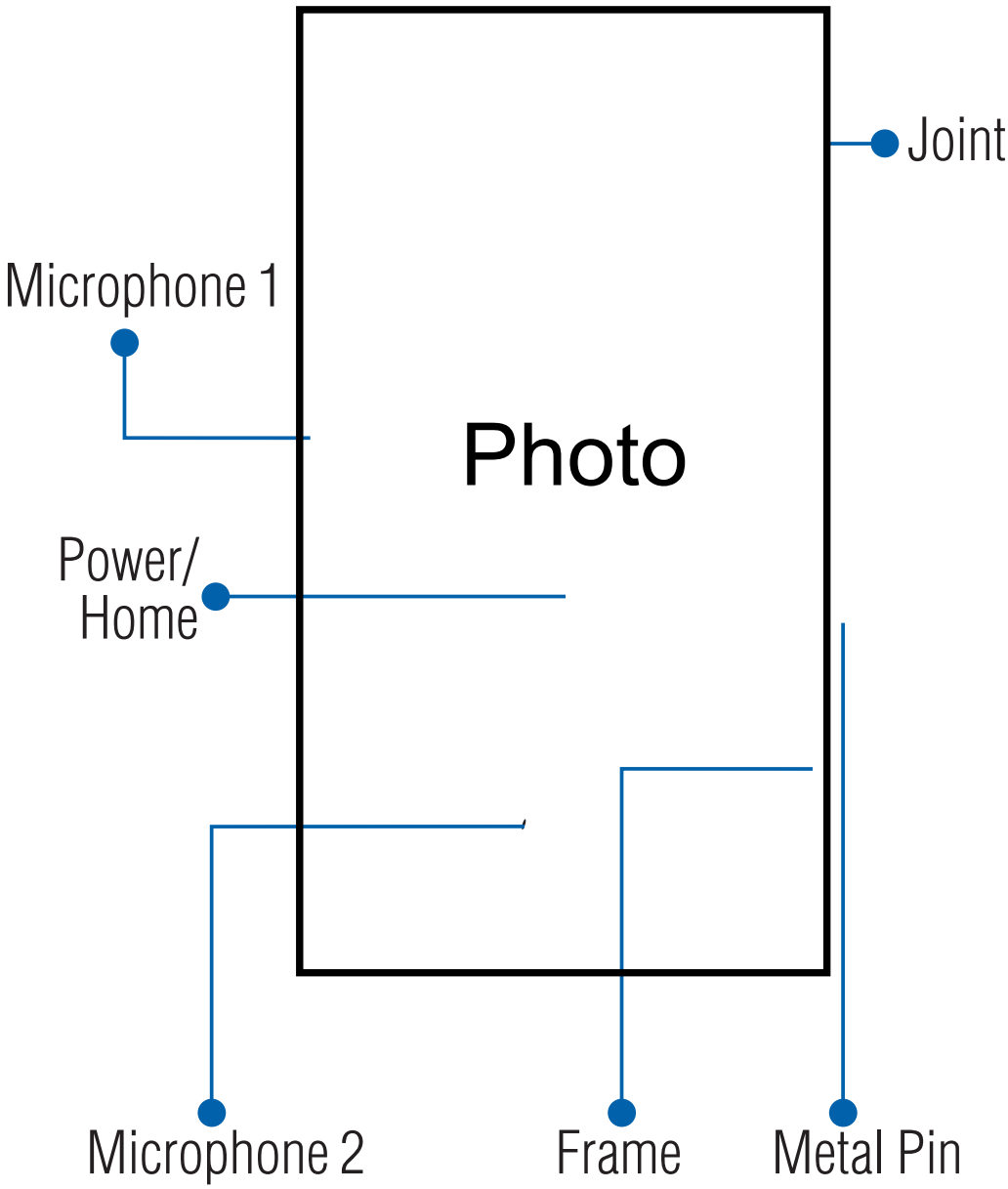
Joint
Microphone 1
Photo
Power/
Home
Microphone 2
Frame
Metal Pin

# Setting Up Your Device

## Charging the Device

1. Before turning on your Galaxy Gear™ for the first time, charge it fully.
2. In a single motion, slide and hold the switch to open the cover of the Charging cradle.
3. Carefully place the device onto the cradle, make sure to align the connector plates to the charging pins.
4. Firmly close the cover.
5. Connect the USB cable to the charging head.
6. Insert the USB cable connector into the charging cradle's charger jack.
7. Plug the charging head into a standard AC power outlet. The device turns on and indicates its charge state.
8. When charging is finished, first unplug the charger's power plug from the AC wall outlet, then disconnect the charger's connector from the device.

## Turning Your Device On and Off

1. To turn **ON**, press and hold the **Power/Home** key.
2. To turn **OFF**, press and hold **Power/Home** key.

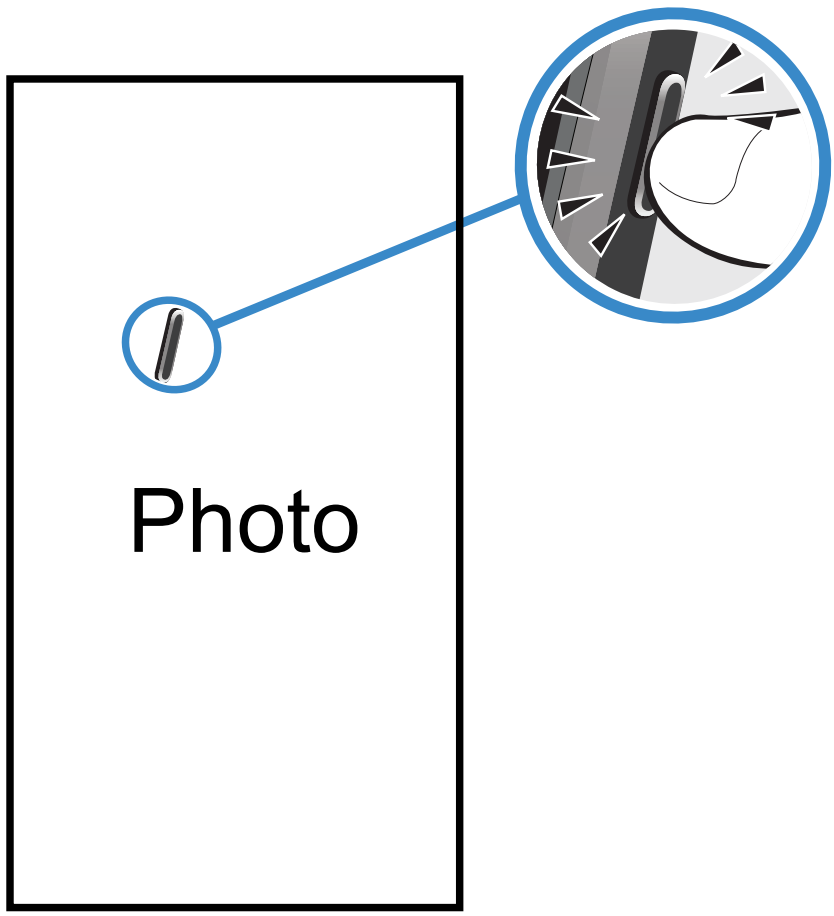

# Connection

## Pairing the Devices Automatically

1. Activate NFC on the smartphone and turn on your Galaxy Gear.
2. Turn your Charging cradle around and tap it to the back of the smartphone (as previously shown).
3. Tap ✓ (**Accept**) on the Galaxy Gear screen, confirm the PIN codes match, and tap **OK** on your smartphone to confirm the pairing request.
4. Read the on-screen legal and disclaimer information and accept the terms and conditions to complete the process.
5. Read the on-screen tips and tap **Close**.
6. Verify the entry now shows "**Connected**" within the Gear Manager application and the icon appears at the top of your smartphone's screen.

**NOTE:** If the connection process fails, restart both devices and repeat the steps above.

## Pairing the Devices Manually

**NOTE:** Use this process if NFC automatic connection fails.

1. Activate Bluetooth on the smartphone, and then tap the previously installed (**Gear Manager**).
2. If the Gear Manager has not yet been used to pair a Gear, tap **Connect manually** → **OK**.
   - or -
   Tap the paired device from within the **Paired Gear** area of the screen and select **Connect new Gear** → **OK** → **Connect manually**.
3. Tap the listed on-screen **GALAXY Gear** device.
4. Tap (**Accept**) on the Galaxy Gear screen, confirm the PIN codes match, and tap **OK** on your smartphone to confirm the pairing request.
5. Read the on-screen legal and disclaimer information and accept the terms and conditions.
6. Read the on-screen tips and tap **Close**.
7. Verify the entry now shows "**Connected**" within Gear Manager and appears on the smartphone.

**NOTE:** If the connection process fails, restart both devices and repeat the steps above.

# Navigation & Gestures

## Waking the Device

- Shake the Galaxy Gear on your wrist or press the **Power/Home** key.

## Screen Navigation

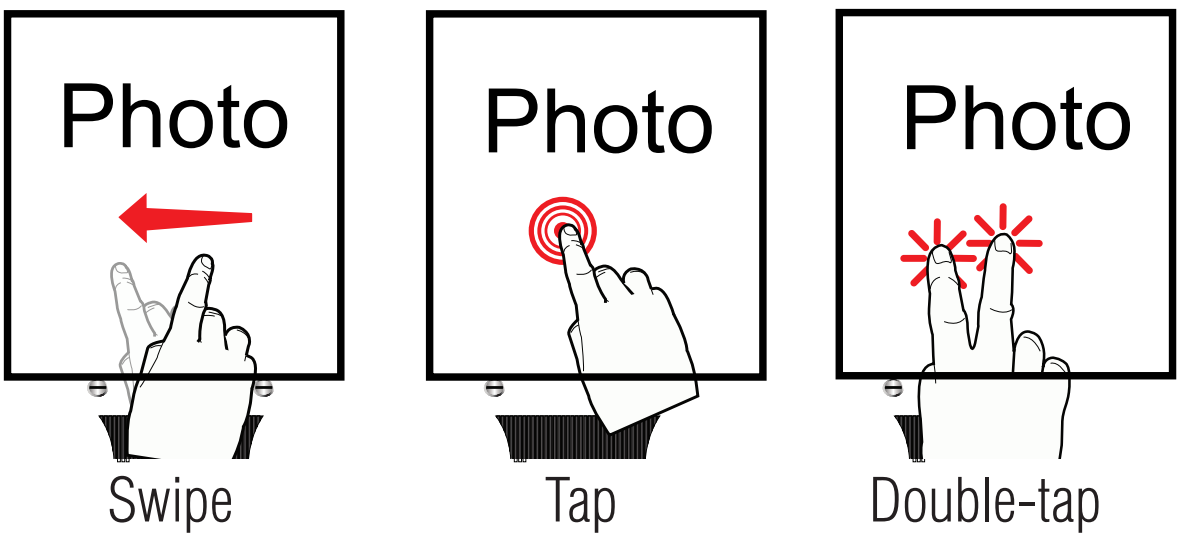


- **Swipe** left or right across the Home screen to view the favorite functions .
- **Tap** on the screen to select an on-screen item.
- **Double-tap** the screen simultaneoulsy once with two fingers to:
  - Access the Brightness and Volume controls.
  - View Battery and Bluetooth connection status.

# Security

## Securing Your Galaxy Gear

**NOTE:** Although Galaxy Gear can be paired and synchronized with your smartphone, it is not secured.
It is recommended that you use the Gear Manager to change the default name of your Galay Gear.

1. From the Home (Clock) screen, swipe across the display and select ( ) **Apps** → **Settings** → **Privacy lock** → **Privacy lock**.
2. Select **Pattern** and follow the on-screen instructions to create an unlock pattern.

## Finding My Smartphone

1. From the Home (Clock) screen, swipe across the Galaxy Gear display and select ( ) **Apps** → **Find my device** → **Start**.
2. Once you have located the smartphone, touch and slide across the screen to turn off the alert.

# Calling Features

## Making a Call

1. From the Home (Clock) screen, swipe across the display and select ( ) **Apps** → **Dialer**.
2. Enter the number you wish to call and tap  to place the call.

- If you make a mistake while dialing, tap  to clear the last digit. Touch and hold  to clear the entire sequence.

## Making a Call using Logs

1. From the Home (Clock) screen, swipe across the display and select ( ) **Logs**.
2. Tap an entry and select  (**Call**).

## Sending a Call to the Device

- From within an active call, tap ( ) **Send to Device**.

## Sending a Call to the Galaxy Gear

- From within an active call screen on the smartphone, tap Headset (**Bluetooth Headset Off**) to turn the connection back on and send the call to the Galaxy Gear.

## Ending a Call

- From within an active call, tap (**End Call**).

## Answering a Call

- At the incoming call screen, touch and slide (**Answer**) across the screen to the right to answer.

## Rejecting a Call

- At the incoming call screen, touch and slide (**Reject**) across the screen to the left to route the call to your voicemail system.

# Messaging

## Viewing a New Message on Galaxy Gear

- Tap the new on-screen notification.

**NOTE:** To check notifications manually, swipe across the screen and tap **Notifications**.

## Replying to a New Message

**IMPORTANT:** To reply via Galaxy Gear, you must first launch the S Voice application on the smartphone and accept the terms of service prior to its initial use.

1. Tap the Galaxy Gear's new on-screen notification.
2. With the message displayed, tap (**Menu**) and select **S Voice reply**.
3. Once the on-screen S Voice icon turns blue (**S Voice Ready**), speak the words you would like to add to your reply message.
4. Once you have confirmed your text, say "**Send**."

**NOTE:** Swipe down on the Galaxy Gear's screen to go back.

# Apps & More

## Accessing Applications

- Turn on Galaxy Gear and swipe across the screen to view the currently loaded top applications.

**NOTE:** These favorite applications can be customized from within Gear Manager's My apps menu.

## Adding Your Favorite Applications

Galaxy Gear comes with a set of default favorite applications that appear as you scroll across the screen. This list of displayed applications can be customized via the Gear Manager application on the smartphone.

1. From your smartphone, launch (**Gear Manager**) → (**My apps**) → (**Add**).
2. Scroll through the on-screen list and place a check mark alongside those desired applications.
3. Tap **Done**. The **My apps** screen then displays the currently displayed favorite applications that will now appear on Galaxy Gear as you swipe across the screen.

## Customizing the Clock Screen

The clock shown on the Galaxy Gear's Home screen can be customized by selecting an available setting from within the Gear Manager application.

1. From within your smartphone's Applications page, launch (**Gear Manager**) → (**Clocks**).
2. Select an available clock face from the on-screen list.
3. Tap (**Settings**) to customize your selected clock.

# Assembling and preparing your mobile Device

Get started by assembling and setting up your mobile Device for its first use.

## Install the SIM card

When you subscribe to a cellular service, you will receive a Subscriber Identity Module, or SIM card, with subscription details, such as your personal identification number (PIN) and optional services.

To install the SIM card.

1. Remove the SIM cover. If the Device is on, press and hold [ ] to turn it [ off.
2. Insert the SIM card. Place the SIM card in the Device with the gold-coloured contacts facing down.

## Charge the battery

Before using the Device for the first time, you must charge the battery.

1. Open the cover to the multifunction jack on the side of the Device.
2. Plug the small end of the travel adapter into the multifunction jack. Improperly connecting the travel adapter can cause serious damage to the Device. Any damages by misuse are not covered by the warranty.
3. Plug the large end of the travel adapter into a power outlet.
4. When the battery is fully charged (the [|||||] icon is no longer moving), unplug the travel adapter from the power outlet.
5. Unplug the travel adapter from the Device.
6. Close the cover to the multifunction jack.

**About the low battery indicator**

When your battery is low, the Device will emit a warning tone and a low battery message. The battery icon will also be empty and blinking. If the battery level becomes too low, the Device will automatically power off. Recharge your battery to continue using your Device.

# Connectivity

## Bluetooth

Bluetooth is a short-range wireless communications technology capable of exchanging information over a distance of about 10 m without requiring a physical connection.

You do not need to line up the devices to beam information with Bluetooth. If the devices are within range of one another, you can exchange information between them even if they are located in different rooms.

Samsung is not responsible for the loss, interception, or misuse of data sent or received via the Bluetooth wireless feature.

Always ensure that you share and receive data with devices that are trusted and properly secured. If there are obstacles between the devices, the operating distance may be reduced.

Some devices, especially those that are not tested or approved by Bluetooth SIG, may be incompatible with your device.

### › ›Turn on the Bluetooth wireless feature

1 In Menu mode, select **Settings** →**Connectivity** → **Bluetooth**.

2 Select **Bluetooth** to turn on the Bluetooth wireless feature.

3 To allow other devices to locate your device, select → Settings → My Device's visibility → Always

### › ›Turn off the Bluetooth wireless feature

1. In Menu mode, select **Settings** →**Connectivity** → **Bluetooth**.

2. Select **Bluetooth** to turn off the Bluetooth wireless feature.

If you selected **Custom**, enter duration that your device is visible and select **Done**.

Once the Bluetooth wireless feature is active, select and use the following options:

To change your device's name, select **Settings** → **My Device's name**.

To set limits on browsing your files to others, select **Settings** → **Secure mode**.

To check Bluetooth services available on your device and information about the services, select **Bluetooth services**.

## › Find and pair with other Bluetooth-enabled devices

1 In Menu mode, select **Settings** →**Connectivity** → **Bluetooth** →**Search**.

2 Select a device.

3 Enter a PIN for the Bluetooth wireless feature or the other device's Bluetooth PIN, if it has one, and select **Done**. Alternatively, select **Yes** to match the PIN between your device and the device.
When the owner of the other device enters the same PIN or accepts the connection, pairing is complete. If the pairing is successful, the device will automatically search for available services.

Some devices, especially headsets or hands-free car kits, may have a fixed Bluetooth PIN, such as 0000. If the other device has a PIN, you must enter it.

Once the device is paired with another Bluetooth-enabled device, the device icon will turn green.
Select a paired device and use the following options:

To browse files on the paired device, select **Browse files**.
To view the service list of the paired device, select **Service list**.
To change the paired device name, select **Rename**.
To allow the paired device to access and browse your files, select **Authorise device**.
To send your files to the paired device, select **Send My files**.
To end the connection and delete the paired device, select **Delete**.

## › ›Send data using the Bluetooth wireless feature

1 Select a file or item, such as a contact, calendar event, memo, task, or media file, from an appropriate application or **My files**.

2 Select → an option for sending via Bluetooth. 3 Search for and pair with a Bluetooth-enabled device.

## ›Receive data using the Bluetooth wireless feature

1 Enter the PIN for the Bluetooth wireless feature and select **OK** (if necessary).

2 Select **Yes** to confirm that you are willing to receive data from the device (if necessary).

Received data is saved to an appropriate application or folder according to its type. For example, a music or sound clip is saved to the sound folder and a contact to the phonebook.

### › ›Use Remote SIM mode

In Remote SIM mode, you can make or answer calls only with a connected Bluetooth hands-free car kit via the SIM or USIM card on your device. To activate Remote SIM mode,

1 In Menu mode, select **Settings** →**Connectivity** → **Bluetooth**.

2 Select → **Settings** → **Remote SIM mode**.

To use Remote SIM mode, start the Bluetooth connection from a Bluetooth hands-free car kit.

You must authorise the Bluetooth hands-free car kit.

## Wi-Fi

Learn to use your device's wireless networking capabilities to activate and connect to any wireless local area network (WLAN) compatible with the IEEE 802.11 b/g/n standards.

You can connect to the internet or other network devices anywhere an access point or wireless hotspot is available.

Your device uses non-harmonised frequency and is intended for use in all European countries. The WLAN can be operated in the EU without restriction indoors, but cannot be operated outdoors in France.

### › ›Activate the WLAN feature

In Menu mode, select **Settings** →**Connectivity** →**Wi-Fi**.

An active WLAN running in the background will consume battery power. To preserve battery power, activate the WLAN only when needed.

### › ›Deactivate the WLAN feature

In Menu mode, select **Settings** →**Connectivity** →**Wi-Fi**.

### › ›Find and connect to a WLAN

1 In Menu mode, select **Settings** →**Connectivity** →**Wi-Fi**. The device

will automatically search for available WLANs. 2 Select the check box next to a network. 3 Enter a password for the network and select **Done** (if necessary).

## › Customise the connection profile

1 In Menu mode, select **Settings** →**Connectivity** →**Wi-Fi**. 2 Select the discovered WLAN AP. The current connection profile for the network appears. 3 Customise the connection profile of the selected WLAN:

| Option | Function |
|---|---|
| Name | View the name of the profile. |
| Security type EAP method | View the security type of the WLAN AP. Select an EAP method. This option is available depending on the selected security type. |
| User name | Enter your user name. This option is available depending on the selected security type. |
| Password | Enter your password. This option is available depending on the selected security type. |
| IP address | View your IP address of the WLAN AP. |
| IP address type | Select the IP address type of the WLAN AP. |

| Option | Function |
|---|---|
| Proxy address and port | Enter the address and port number of the proxy server. |
| AP MAC | View the MAC address of the WLAN AP. |

To delete all details of the connection profile, select **Forget**.

## › Connect to a WLAN using a Wi-Fi Protected Setup (WPS)

# PC Connections

You can connect your device to a PC using an optional PC data cable using various USB connection modes. When you connect the device to a PC, you can synchronize files with Windows Media Player, transfer data to and from your device directly, or launch Samsung PC Studio when a USB connection is detected.

# Configuring Your Device USB Settings

## Configuring Your Device USB Settings

This menu selects the method of communication for the USB port.

Note: The Bluetooth feature must first be disabled before initiating a USB connection with the Device. Prior to connecting the USB cable to the phone, install the latest version of the PC Studio application. This application installs the necessary USB drivers onto your machine. For a free download of PC Studio, go to www.samsung.com/us/support.

1.Touch ➔Settings ➔Connectivity ➔Select USB mode.

2. Select one of the following USB modes:

- •Ask on connection: causes the phone to present a “Select USB Mode” pop-up when you connect to the PC. You can then choose from either: Samsung PC Studio, Media player, or Mass storage.
- •Samsung PC Studio: sets PC Studio to launch as the default application when a USB connection is detected.
- •Media player: sets the Media Player to launch as the default application when a USB connection is detected.
- •Mass storage: allows you to utilize the onboard storage capacity of the phone’s microSD card to store and upload files. This option allows your computer to detect the phone’s microSD card as a removable storage drive.

3.Touch Save.

# troubleshooting

If you are having trouble with your mobile Device, try these troubleshooting procedures before contacting a service professional.

While using your Device, the following messages may appear:

| Message | Try this to solve the problem: |
|---|---|
| Please insert SIM card | Ensure that the SIM card is installed correctly. |
| Device lock | When the Device lock feature is enabled, you must enter the password you set for the Device. |
| Enter PIN | When using the Device for the first time or when the PIN requirement is enabled, you must enter the PIN supplied with the SIM card. You can disable this feature by using the PIN lock menu. |
| Enter PUK | Your SIM card is blocked, usually as a result of entering your PIN incorrectly several times. You must enter the PUK supplied by your service provider. |

Your Device displays “Network unavailable” or “Network error.”

- When you are in areas with weak signals or poor reception, you may lose reception. Move to another area and try again.
- You cannot access some options without a subscription. Contact your service provider for more details.

You enter a number, but the call is not dialled.

- Ensure that you have pressed the Dial key: [ ].
- Ensure that you have accessed the right cellular network.
- Ensure that you have not set call barring for the phone number.

Another caller cannot reach you.

- Ensure that your Device is turned on.
- Ensure that you have accessed the right cellular network.
- Ensure that you have not set call barring for the phone number.

Another caller cannot hear you speaking.

- Ensure that you are not covering the built-in microphone.
- Ensure that the microphone is close to your mouth.
- If using a headset, ensure that it is properly connected.

### The Device beeps and the battery icon flashes.

Your battery is low. Recharge or replace the battery to continue using the Device.

### The audio quality of the call is poor.

- When you are in areas with weak signals or poor reception, you may lose reception or experience poor audio quality. Move to another area and try again.
- When you are in areas with weak signals or poor reception, you may lose reception. Move to another area and try again.

### You select a contact to call, but the call is not dialled.

- Ensure that the correct number is stored in the contact list.
- Re-enter and save the number, if necessary.

### Your Device is hot to the touch.

When you use several applications at once, your Device requires more power and may heat up.
This is normal and should not affect your phone's lifespan or performance.

Some of the contents in this manual may differ from your Device depending on the software of the Device or your service provider.

# safety and usage information

Comply with the following precautions to avoid dangerous or illegal situations and ensure peak performance of your mobile Device.

## WARNING Safety warnings

### Keep your Device away from small children and pets

Keep your Device and all accessories out of the reach of small children or animals. Small parts may cause choking or serious injury if swallowed.

### Protect your hearing

Excessive exposure to sound at high volumes can cause hearing damage. Always turn the volume down before plugging the earphones into an audio source and use only the minimum volume setting necessary to hear your conversation or music.

### Install mobile Devices and equipment with caution

Ensure that any mobile Devices or related equipment installed in your vehicle are securely mounted. Avoid placing your Device and accessories near or in an air bag deployment area. Improperly installed wireless equipment can cause serious injury when air bags inflate rapidly.

### Handle and dispose of batteries and chargers with care

- Use only Samsung-approved batteries and chargers specifically designed for your Device. Incompatible batteries and chargers can cause serious injuries or damage to your Device.
- Never dispose of batteries or Devices in a fire. Follow all local regulations when disposing used batteries or Devices.
- Never place batteries or Devices on or in heating devices, such as microwave ovens, stoves, or radiators. Batteries may explode when overheated.
- Never crush or puncture the battery. Avoid exposing the battery to high external pressure, which can lead to an internal short circuit and overheating.

### Avoid interference with pacemakers

Maintain a minimum of 15 cm (6 inches) between mobile Devices and pacemakers to avoid potential interference, as recommended by manufacturers and the independent research group, Wireless Technology Research. If you have any reason to suspect that your Device is interfering with a pacemaker or other medical device, turn off the Device immediately and contact the manufacturer of the pacemaker or medical device for guidance.

### Turn off the Device in potentially explosive environments

Do not use your Device at refuelling points (service stations) or near fuels or chemicals. Turn off your Device whenever directed by warning signs or instructions. Your Device could cause explosions or fire in and around fuel or chemical storage and transfer areas or blasting areas. Do not store or carry flammable liquids, gases, or explosive materials in the same compartment as the Device, its parts, or accessories.

### Reduce the risk of repetitive motion injuries

When sending text messages or playing games on your Device, hold the Device with a relaxed grip, press the keys lightly, use special features that reduce the number of keys you have to press (such as templates and predictive text), and take frequent breaks.

## CAUTION Safety precautions

### Drive safely at all times

Avoid using your Device while driving and obey all regulations that restrict the use of mobile Devices while driving. Use hands-free accessories to increase your safety when possible.

### Follow all safety warnings and regulations

Comply with any regulations that restrict the use of a mobile Device in a certain area.

### Use only Samsung-approved accessories

Using incompatible accessories may damage your Device or cause injury.

### Turn off the Device near medical equipment

Your Device can interfere with medical equipment in hospitals or health care facilities. Follow all regulations, posted warnings, and directions from medical personnel.

### Turn off the Device or disable the wireless functions when in an aircraft

Your Device can cause interference with aircraft equipment. Follow all airline regulations and turn off your Device or switch to a mode that disables the wireless functions when directed by airline personnel.

### Protect batteries and chargers from damage

Avoid exposing batteries to very cold or very hot temperatures (below 0° C/32° F or above 45° C/ 113° F). Extreme temperatures can reduce the charging capacity and life of your batteries.

Prevent batteries from contacting metal objects, as this can create a connection between the + and - terminals of your batteries and lead to temporary or permanent battery damage.

Never use a damaged charger or battery.

### Handle your Device carefully and sensibly

Do not allow your Device to get wet—liquids can cause serious damage. Do not handle your Device with wet hands. Water damage to your Device can void your manufacturer's warranty.

- Avoid using or storing your Device in dusty, dirty areas to prevent damage to moving parts.
- Your Device is a complex electronic device— protect it from impacts and rough handling to avoid serious damage.
- Do not paint your Device, as paint can clog moving parts and prevent proper operation.
- Your Device and memory cards may be damaged by exposure to magnetic fields. Do not use carrying cases or accessories with magnetic closures or allow your Device to come in contact with magnetic fields for extended periods of time.

### Avoid interference with other electronic devices

Your Device emits radio frequency (RF) signals that may interfere with unshielded or improperly shielded electronic equipment, such as pacemakers, hearing aids, medical devices, and other electronic devices in homes or vehicles. Consult the manufacturers of your electronic devices to solve any interference problems you experience.

# Important usage information

### Use your Device in the normal position

Avoid contact with your device's internal antenna.

### Allow only qualified personnel to service your Device.

Allowing unqualified personnel to service your Device may result in damage to your Device and will void your warranty.

### Ensure maximum battery and charger life

- Avoid charging batteries for more than a week, as overcharging may shorten battery life.
- Over time, unused batteries will discharge and must be recharged before use.
- Disconnect chargers from power sources when not in use.
- Use batteries only for their intended purpose.

### Handle SIM cards with care

- Do not remove a card while the Device is transferring or accessing information, as this could result in loss of data and/or damage to the card or Device.
- Protect cards from strong shocks, static electricity, and electrical noise from other devices.
- Do not touch gold-coloured contacts or terminals with your fingers or metal objects. If dirty, wipe the card with a soft cloth.

### Ensure access to emergency services

Emergency calls from your Device may not be possible in some areas or circumstances. Before travelling in remote or undeveloped areas, plan an alternate method of contacting emergency services personnel.

# *Health and safety information*

**Exposure to Radio Frequency (RF) Signals**

**Certification Information (SAR)**

Your wireless Device is a radio transmitter and receiver. It is designed and manufactured not to exceed the exposure limits for radio frequency (RF) energy set by the Federal Communications Commission (FCC) of the U.S. government. These FCC exposure limits are derived from the recommendations of two expert organizations, the National Counsel on Radiation Protection and Measurement (NCRP) and the Institute of Electrical and Electronics Engineers (IEEE). In both cases, the recommendations were developed by scientific and engineering experts drawn from industry, government, and academia after extensive reviews of the scientific literature related to the biological effects of RF energy.

The exposure limit set by the FCC for wireless mobile devices employs a unit of measurement known as the Specific Absorption Rate (SAR). The SAR is a measure of the rate of absorption of RF energy by the human body expressed in units of watts per kilogram (W/kg). The FCC requires wireless Devices to comply with a safety limit of 1.6 watts per kilogram (1.6 W/ kg). The FCC exposure limit incorporates a substantial margin of safety to give additional protection to the public and to account for any variations in measurements.

SAR tests are conducted using standard operating positions accepted by the FCC with the Device transmitting at its highest certified power level in all tested frequency bands. Although the SAR is determined at the highest certified power level, the actual SAR level of the Device while operating can be well below the maximum value. This is because the Device is designed to operate at multiple power levels so as to use only the power required to reach the network. In general, the closer you are to a wireless base station antenna, the lower the power output.

Before a new model Device is available for sale to the public, it must be tested and certified to the FCC that it does not exceed the exposure limit established by the FCC. Tests for each model Device are performed in positions and locations (e.g. at the ear and worn on the body) as required by the FCC.

Non-compliance with the above restrictions may result in violation of FCC RF exposure guidelines.

SAR information on this and other model devices can be viewed on-line at http://www.fcc.gov/oet/ea/fccid/. Please use the devices FCC ID number for search, A3LSMR750G. Sometimes it may be necessary to remove the battery pack to find the number. Once you have the FCC ID number for a particular device, follow the instructions on the website and it should provide values for typical or maximum SAR for a particular device. Additional product specific SAR information can also be obtained at **http://www.fcc.gov/encyclopedia/specific-absorption-rate-sar-cellular-telephones**

## Consumer Information on Wireless Devices

The U.S. Food and Drug Administration (FDA) has published a series of Questions and Answers for consumers relating to radio frequency (RF) exposure from wireless Devices. The FDA publication includes the following information:

**What kinds of Devices are the subject of this update?**
The term wireless Device refers here to hand-held wireless Devices with built-in antennas, often called “cell,” “mobile,” or “PCS” Devices. These types of wireless Devices can expose the user to measurable radio frequency energy (RF) because of the short distance between the Device and the user's head. These RF exposures are limited by Federal Communications Commission safety guidelines that were developed with the advice of FDA and other federal health and safety agencies. When the Device is located at greater distances from the user, the exposure to RF is drastically lower because a person's RF exposure decreases rapidly with increasing distance from the source. The so-called “cordless Devices,” which have a base unit connected to the telephone wiring in a house, typically operate at far lower power levels, and thus produce RF exposures well within the FCC's compliance limits.

**Do wireless Devices pose a health hazard?**
The available scientific evidence does not show that any health problems are associated with using wireless Devices. There is no proof, however, that wireless Devices are absolutely safe. Wireless Devices emit low levels of radio frequency energy (RF) in the microwave range while being used. They also emit very low levels of RF when in the stand-by mode. Whereas high levels of RF can produce health effects (by heating tissue), exposure to low level RF that does not produce heating effects causes no known adverse health effects. Many studies of low level RF exposures have not found any biological effects. Some studies have suggested that some biological effects may occur, but such findings have not been confirmed by additional research. In some cases, other researchers have had difficulty in reproducing those studies, or in determining the reasons for inconsistent results.

**What is FDA's role concerning the safety of wireless Devices?**
Under the law, FDA does not review the safety of radiation-emitting consumer products such as wireless Devices before they can be sold, as it does with new drugs or medical devices. However, the agency has authority to take action if wireless Devices are shown to emit radio frequency energy (RF) at a level that is hazardous to the user. In such a case, FDA could require the manufacturers of wireless Devices to notify users of the health hazard and to repair, replace or recall the Devices so that the hazard no longer exists.
Although the existing scientific data do not justify FDA regulatory actions, FDA has urged the wireless Device industry to take a number of steps, including the following:

- “Support needed research into possible biological effects of RF of the type emitted by wireless Devices;
- “Design wireless Devices in a way that minimizes any RF exposure to the user that is not necessary for device function; and
- “Cooperate in providing users of wireless Devices with the best possible information on possible effects of wireless Device use on human health.

FDA belongs to an interagency working group of the federal agencies that have responsibility for different aspects of RF safety to ensure coordinated efforts at the federal level. The following agencies belong to this working group:

- “National Institute for Occupational Safety and Health

- “Environmental Protection Agency
- “Federal Communications Commission
- “Occupational Safety and Health Administration
- “National Telecommunications and Information Administration

The National Institutes of Health participates in some interagency working group activities, as well.

FDA shares regulatory responsibilities for wireless Devices with the Federal Communications Commission (FCC). All Devices that are sold in the United States must comply with FCC safety guidelines that limit RF exposure. FCC relies on FDA and other health agencies for safety questions about wireless Devices.

FCC also regulates the base stations that the wireless Device networks rely upon. While these base stations operate at higher power than do the wireless Devices themselves, the RF exposures that people get from these base stations are typically thousands of times lower than those they can get from wireless Devices. Base stations are thus not the primary subject of the safety questions discussed in this document.

**What are the results of the research done already?**

The research done thus far has produced conflicting results, and many studies have suffered from flaws in their research methods. Animal experiments investigating the effects of radio frequency energy (RF) exposures characteristic of wireless Devices have yielded conflicting results that often cannot be repeated in other laboratories. A few animal studies, however, have suggested that low levels of RF could accelerate the development of cancer in laboratory animals. However, many of the studies that showed increased tumor development used animals that had been genetically engineered or treated with cancer-causing chemicals so as to be pre-disposed to develop cancer in absence of RF exposure. Other studies exposed the animals to RF for up to 22 hours per day. These conditions are not similar to the conditions under which people use wireless Devices, so we don't know with certainty what the results of such studies mean for human health.

Three large epidemiology studies have been published since December 2000. Between them, the studies investigated any possible association between the use of wireless Devices and primary brain cancer, glioma, meningioma, or acoustic neuroma, tumors of the brain or salivary gland, leukemia, or other cancers. None of the studies demonstrated the existence of any harmful health effects from wireless Devices RF exposures. However, none of the studies can answer questions about long-term exposures, since the average period of Device use in these studies was around three years.

**What research is needed to decide whether RF exposure from wireless Devices poses a health risk?**

A combination of laboratory studies and epidemiological studies of people actually using wireless Devices would provide some of the data that are needed. Lifetime animal exposure studies could be completed in a few years. However, very large numbers of animals would be needed to provide reliable proof of a cancer promoting effect if one exists. Epidemiological studies can provide data that is directly applicable to human populations, but ten or more years' follow-up may be needed to provide answers about some health effects, such as cancer. This is because the interval between the time of exposure to a cancer-causing agent and the time tumors develop - if they do - may be many, many years. The interpretation of

epidemiological studies is hampered by difficulties in measuring actual RF exposure during day-to-day use of wireless Devices. Many factors affect this measurement, such as the angle at which the Device is held, or which model of Device is used.

**What is FDA doing to find out more about the possible health effects of wireless Device RF?**

FDA is working with the U.S. National Toxicology Program and with groups of investigators around the world to ensure that high priority animal studies are conducted to address important questions about the effects of exposure to radio frequency energy (RF).

FDA has been a leading participant in the World Health Organization international Electromagnetic Fields (EMF) Project since its inception in 1996. An influential result of this work has been the development of a detailed agenda of research needs that has driven the establishment of new research programs around the world. The Project has also helped develop a series of public information documents on EMF issues.

FDA and Cellular Telecommunications & Internet Association (CTIA) have a formal Cooperative Research and Development Agreement (CRADA) to do research on wireless Device safety. FDA provides the scientific oversight, obtaining input from experts in government, industry, and academic organizations. CTIA-funded research is conducted through contracts to independent investigators. The initial research will include both laboratory studies and studies of wireless Device users. The CRADA will also include a broad assessment of additional research needs in the context of the latest research developments around the world.

**What steps can I take to reduce my exposure to radio frequency energy from my wireless Device?**

If there is a risk from these products - and at this point we do not know that there is - it is probably very small. But if you are concerned about avoiding even potential risks, you can take a few simple steps to minimize your exposure to radio frequency energy (RF). Since time is a key factor in how much exposure a person receives, reducing the amount of time spent using a wireless Device will reduce RF exposure.

- “If you must conduct extended conversations by wireless Device every day, you could place more distance between your body and the source of the RF, since the exposure level drops off dramatically with distance. For example, you could use a headset and carry the wireless Device away from your body.

Again, the scientific data do not demonstrate that wireless Devices are harmful. But if you are concerned about the RF exposure from these products, you can use measures like those described above to reduce your RF exposure from wireless Device use.

**What about children using wireless Devices?**

The scientific evidence does not show a danger to users of wireless Devices, including children and teenagers. If you want to take steps to lower exposure to radio frequency energy (RF), the measures described above would apply to children and teenagers using wireless Devices. Reducing the time of wireless Device use and increasing the distance between the user and the RF source will reduce RF exposure.

Some groups sponsored by other national governments have advised that children be discouraged from using wireless Devices at all. For example, the government in

the United Kingdom distributed leaflets containing such a recommendation in December 2000. They noted that no evidence exists that using a wireless Device causes brain tumors or other ill effects. Their recommendation to limit wireless Device use by children was strictly precautionary; it was not based on scientific evidence that any health hazard exists.

**Do hands-free kits for wireless Devices reduce risks from exposure to RF emissions?**

Since there are no known risks from exposure to RF emissions from wireless Devices, there is no reason to believe that hands-free kits reduce risks. Hands-free kits can be used with wireless Devices for convenience and comfort. These systems reduce the absorption of RF energy in the head because the Device, which is the source of the RF emissions, will not be placed against the head. On the other hand, if the Device is mounted against the waist or other part of the body during use, then that part of the body will absorb more RF energy. Wireless Devices marketed in the U.S. are required to meet safety requirements regardless of whether they are used against the head or against the body. Either configuration should result in compliance with the safety limit.

**Do wireless Device accessories that claim to shield the head from RF radiation work?**

Since there are no known risks from exposure to RF emissions from wireless Devices, there is no reason to believe that accessories that claim to shield the head from those emissions reduce risks. Some products that claim to shield the user from RF absorption use special Device cases, while others involve nothing more than a metallic accessory attached to the Device. Studies have shown that these products generally do not work as advertised. Unlike “hand-free” kits, these so-called “shields” may interfere with proper operation of the Device. The Device may be forced to boost its power to compensate, leading to an increase in RF absorption. In February 2002, the Federal trade Commission (FTC) charged two companies that sold devices that claimed to protect wireless Device users from radiation with making false and unsubstantiated claims. According to FTC, these defendants lacked a reasonable basis to substantiate their claim.

**What about wireless Device interference with medical equipment?**

Radio frequency energy (RF) from wireless Devices can interact with some electronic devices. For this reason, FDA helped develop a detailed test method to measure electromagnetic interference (EMI) of implanted cardiac pacemakers and defibrillators from wireless telephones. This test method is now part of a standard sponsored by the Association for the Advancement of Medical instrumentation (AAMI). The final draft, a joint effort by FDA, medical device manufacturers, and many other groups, was completed in late 2000. This standard will allow manufacturers to ensure that cardiac pacemakers and defibrillators are safe from wireless Device EMI. FDA has tested wireless Devices and helped develop a voluntary standard sponsored by the Institute of Electrical and Electronic Engineers (IEEE). This standard specifies test methods and performance requirements for hearing aids and wireless Devices so that no interference occurs when a person uses a compatible Device and a compatible hearing aid at the same time. This standard was approved by the IEEE in 2000.

FDA continues to monitor the use of wireless Devices for possible interactions with other medical devices. Should harmful interference be found to occur, FDA will

conduct testing to assess the interference and work to resolve the problem.
Additional information on the safety of RF exposures from various sources can be obtained from the following organizations:

- FCC RF Safety Program:
  http://www.fcc.gov/oet/rfsafety/
- Environmental Protection Agency (EPA):
  http://www.epa.gov/radiation/
- Occupational Safety and Health Administration's (OSHA):
  http://www.osha.gov/SLTC/radiofrequencyradiation/index.html
- National institute for Occupational Safety and Health (NIOSH):
  http://www.cdc.gov/niosh/
- World health Organization (WHO):
  http://www.who.int/peh-emf/
- International Commission on Non-Ionizing Radiation Protection:
  http://www.icnirp.de
- National Radiation Protection Board (UK):
  http://www.hpa-radiationservices.org.uk/rpa
- Updated 4/3/2002: US food and Drug Administration
  http://www.fda.gov/Radiation-EmittingProducts/RadiationEmittingProductsandProcedures/HomeBusinessandEntertainment/CellPhones/default.htm

**Road Safety**

Your wireless Device gives you the powerful ability to communicate by voice, almost anywhere, anytime. But an important responsibility accompanies the benefits of wireless Devices, one that every user must uphold.
When driving a car, driving is your first responsibility. When using your wireless Device behind the wheel of a car, practice good common sense and remember the following tips:

1. Get to know your wireless Device and its features, such as speed dial and redial. If available, these features help you to place your call without taking your attention off the road.
2. When available, use a hands-free device. If possible, add an additional layer of convenience and safety to your wireless Device with one of the many hands free accessories available today.
3. Position your wireless Device within easy reach. Be able to access your wireless Device without removing your eyes from the road. If you get an incoming call at an inconvenient time, let your voice mail answer it for you.
4. Let the person you are speaking with know you are driving; if necessary, suspend the call in heavy traffic or hazardous weather conditions. Rain, sleet, snow, ice and even heavy traffic can be hazardous.
5. Do not take notes or look up Device numbers while driving. Jotting down a “to do” list or flipping through your address book takes attention away from your primary responsibility, driving safely.
6. Dial sensibly and assess the traffic; if possible, place calls when you are not moving or before pulling into traffic. Try to plan calls when your car will be stationary. If you need to make a call while moving, dial only a few numbers, check the road and your mirrors, then continue.

7. Do not engage in stressful or emotional conversations that may be distracting. Make people you are talking with aware you are driving and suspend conversations that have the potential to divert your attention from the road.
8. Use your wireless Device to call for help. Dial 9-1-1 or other local emergency number in the case of fire, traffic accident or medical emergencies. Remember, it is a free call on your wireless Device!
9. Use your wireless Device to help others in emergencies. If you see an auto accident, crime in progress or other serious emergency where lives are in danger, call 9-1-1 or other local emergency number, as you would want others to do for you.
10. Call roadside assistance or a special non-emergency wireless assistance number when necessary. If you see a broken-down vehicle posing no serious hazard, a broken traffic signal, a minor traffic accident where no one appears injured, or a vehicle you know to be stolen, call roadside assistance or other special non-emergency number.

**"The wireless industry reminds you to use your Device safely when driving." For more information, please call 1-888-901-SAFE, or visit our web-site www.wow-com.com**
**Provided by the Cellular Telecommunications & Internet Association**

**Operating Environment**

Remember to follow any special regulations in force in any area and always switch your Device off whenever it is forbidden to use it, or when it may cause interference or danger. When connecting the Device or any accessory to another device, read its user's guide for detailed safety instructions. Do not connect incompatible products. As with other mobile radio transmitting equipment, users are advised that for the satisfactory operation of the equipment and for the safety of personnel, it is recommended that the equipment should only be used in the normal operating position.

**Using Your Device Near Other Electronic Devices**

Most modern electronic equipment is shielded from radio frequency (RF) signals. However, certain electronic equipment may not be shielded against the RF signals from your wireless Device. Consult the manufacturer to discuss alternatives.

**Pacemakers**

Pacemaker manufacturers recommend that a minimum distance of 15 cm (6 inches) be maintained between a wireless Device and a pacemaker to avoid potential interference with the pacemaker.
These recommendations are consistent with the independent research and recommendations of Wireless Technology Research.

**Persons with pacemakers:**

- should always keep the Device more than 15 cm (6 inches) from their pacemaker when the Device is switched on.
- should not carry the Device in a breast pocket.
- should use the ear opposite the pacemaker to minimize potential interference.

If you have any reason to suspect that interference is taking place, switch your Device off immediately.

**Hearing Aids**

Some digital wireless Devices may interfere with some hearing aids. In the event of such interference, you may wish to consult your hearing aid manufacturer to discuss alternatives.

**Other Medical Devices**

If you use any other personal medical devices, consult the manufacturer of your device to determine if it is adequately shielded from external RF energy. Your physician may be able to assist you in obtaining this information. Switch your Device off in health care facilities when any regulations posted in these areas instruct you to do so. Hospitals or health care facilities may be using equipment that could be sensitive to external RF energy.

**Vehicles**

RF signals may affect improperly installed or inadequately shielded electronic systems in motor vehicles. Check with the manufacturer or its representative regarding your vehicle. You should also consult the manufacturer of any equipment that has been added to your vehicle.

**Posted Facilities**

Switch your Device off in any facility where posted notices require you to do so.

**Potentially Explosive Environments**

Switch your Device off when in any area with a potentially explosive atmosphere and obey all signs and instructions. Sparks in such areas could cause an explosion or fire resulting in bodily injury or even death.

Users are advised to switch the Device off while at a refueling point (service station).

Users are reminded of the need to observe restrictions on the use of radio equipment in fuel depots (fuel storage and distribution areas), chemical plants or where blasting operations are in progress.

Areas with a potentially explosive atmosphere are often but not always clearly marked. They include below deck on boats, chemical transfer or storage facilities, vehicles using liquefied petroleum gas (such as propane or butane), areas where the air contains chemicals or particles, such as grain, dust or metal powders, and any other area where you would normally be advised to turn off your vehicle engine.

**Emergency Calls**

This Device, like any wireless Device, operates using radio signals, wireless and landline networks as well as user programmed functions, which cannot guarantee connection in all conditions. Therefore, you should never rely solely on any wireless Device for essential communications (medical emergencies, for example).

Remember, to make or receive any calls the Device must be switched on and in a service area with adequate signal strength. Emergency calls may not be possible on all wireless Device networks or when certain network services and/ or Device features are in use. Check with local service providers.

To make an emergency call:

1. If the Device is not on, switch it on.
2. Key in the emergency number for your present location (for example, 911 or other official emergency number). Emergency numbers vary by location.
3. Press .

If certain features are in use (call barring, for example), you may first need to deactivate those features before you can make an emergency call. Consult this

document and your local cellular service provider.
When making an emergency call, remember to give all the necessary information as accurately as possible. Remember that your Device may be the only means of communication at the scene of an accident; do not cut off the call until given permission to do so.

**Restricting Children's access to your Device**

Your Device is not a toy. Children should not be allowed to play with it because they could hurt themselves and others, damage the Device or make calls that increase your bill.

## FCC Notice and Cautions

### FCC Notice

This device complies with Part 15 of the FCC Rules. Operation is subject to the following two conditions: (1) this device may not cause harmful interference, and (2) this device must accept any interference received, including interference that may cause undesired operation.

- This equipment has been tested and found to comply with the limits for a Class B digital device, pursuant to part 15 of the FCC Rules. These limits are designed to provide reasonable protection against harmful interference in a residential installation. This equipment generates, uses and can radiate radio frequency energy and, if not installed and used in accordance with the instructions, may cause harmful interference to radio communications. However, there is no guarantee that interference will not occur in a particular installation. If this equipment does cause harmful interference to radio or television reception, which can be determined by turning the equipment off and on, the user is encouraged to try to correct the interference by one or more of the following measures:

-Reorient or relocate the receiving antenna.

-Increase the separation between the equipment and receiver.

-Connect the equipment into an outlet on a circuit different from that to which the receiver is connected.

-Consult the dealer or an experienced radio/TV technician for help.

The Device may cause TV or radio interference if used in close proximity to receiving equipment. The FCC can require you to stop using the Device if such interference cannot be eliminated.
Vehicles using liquefied petroleum gas (such as propane or butane) must comply with the National Fire Protection Standard (NFPA-58). For a copy of this standard, contact the National Fire Protection Association, One Battery march Park, Quincy, MA 02269, Attn: Publication Sales Division.

### Cautions

Changes or modifications made in the radio Device, not expressly approved by Samsung, will void the user's authority to operate the equipment.
The use of any unauthorized accessories may be dangerous and void the Device warranty if said accessories cause damage or a defect to the Device.
Although your Device is quite sturdy, it is a complex piece of equipment and can be broken. Avoid dropping, hitting, bending or sitting on it.

## Other Important Safety Information

- Only qualified personnel should service the Device or install the Device in a vehicle. Faulty installation or service may be dangerous and may invalidate any warranty applicable to the device.
- Check regularly that all wireless Device equipment in your vehicle is mounted and operating properly.
- Do not store or carry flammable liquids, gases or explosive materials in the same compartment as the Device, its parts or accessories.
- For vehicles equipped with an air bag, remember that an air bag inflates with great force. Do not place objects, including both installed or portable wireless equipment in the area over the air bag or in the air bag deployment area. If wireless equipment is improperly installed and the air bag inflates, serious injury could result.
- Switch your Device off before boarding an aircraft. The use of wireless Device in aircraft is illegal and may be dangerous to the aircraft's operation.
- Failure to observe these instructions may lead to the suspension or denial of telephone services to the offender, or legal action, or both.

## Product Performance

### Getting the Most Out of Your Signal Reception

The quality of each call you make or receive depends on the signal strength in your area. Your Device informs you of the current signal strength by displaying a number of bars next to the signal strength icon. The more bars displayed, the stronger the signal.
If you're inside a building, being near a window may give you better reception.

### Understanding the Power Save Feature

If your Device is unable to find a signal after 15 minutes of searching, a Power Save feature is automatically activated. If your Device is active, it periodically rechecks service availability or you can check it yourself by pressing any key. Anytime the Power Save feature is activated, a message displays on the screen. When a signal is found, your Device returns to standby mode.

### Maintaining Your Phone's Peak Performance

For the best care of your Device, only authorized personnel should service your Device and accessories. Faulty service may void the warranty.
There are several simple guidelines to operating your Device properly and maintaining safe, satisfactory service.

- Place the mobile phone's acoustic output next to your ear for proper orientation.
- Do not tamper or alter the phone's antenna.
- Don't use the Device if the antenna is damaged.
- Speak directly into the phone's receiver.
- Avoid exposing your Device and accessories to rain or liquid spills. If your Device does get wet, immediately turn the power off. If it is inoperable, call Customer Care for service.

## Availability of Various Features/Ring Tones

Many services and features are network dependent and may require additional subscription and/or usage charges. Not all features are available for purchase or use in all areas. Downloadable Ring Tones may be available at an additional cost. Other conditions and restrictions may apply. See your service provider for additional information.

**Battery Standby and Talk Time**

Standby and talk times will vary depending on Device usage patterns and conditions. Battery power consumption depends on factors such as network configuration, signal strength, operating temperature, features selected, frequency of calls, and voice, data, and other application usage patterns.

**Care and Maintenance**

Your Device is a product of superior design and craftsmanship and should be treated with care. The suggestions below will help you fulfill any warranty obligations and allow you to enjoy this product for many years.

- Keep the Device and all its parts and accessories out of the reach of small children.
- Keep the Device dry. Precipitation, humidity and liquids contain minerals that will corrode electronic circuits.
- Do not use the Device with a wet hand. Doing so may cause an electric shock to you or damage to the Device.
- Do not use or store the Device in dusty, dirty areas, as its moving parts may be damaged.
- Do not store the Device in hot areas. High temperatures can shorten the life of electronic devices, damage batteries, and warp or melt certain plastics.
- Do not store the Device in cold areas. When the Device warms up to its normal operating temperature, moisture can form inside the Device, which may damage the phone's electronic circuit boards.
- Do not drop, knock or shake the Device. Rough handling can break internal circuit boards.
- Do not use harsh chemicals, cleaning solvents or strong detergents to clean the Device. Wipe it with a soft cloth slightly dampened in a mild soap-and-water solution.
- Do not paint the Device. Paint can clog the device's moving parts and prevent proper operation.
- Do not put the Device in or on heating devices, such as a microwave oven, a stove or a radiator. The Device may explode when overheated.
- When the Device gets wet, the label indicating water damage inside the Device changes color. In this case, Device repairs are no longer guaranteed by the manufacturer's warranty, even if the warranty for your Device has not expired.
- If your Device has a flash or light, do not use it too close to the eyes of people or animals. This may cause damage to their eyes.
- Use only the supplied or an approved replacement antenna. Unauthorized antennas or modified accessories may damage the Device and violate regulations governing radio devices.
- If the Device, battery, charger or any accessory is not working properly, take it to your nearest qualified service facility. The personnel there will assist you, and if necessary, arrange for service.

SAMSUNG ELECTRONICS

Printed in Korea
Code No.:GH68-XXXXXA
English (EU). 10/2011. Draft.05

World Wide Web
http://www.samsungmobile.com