EMC TEST REPORT

Project No.	LBE20220274	**Issue No.**	0
Applicant	**Name of organization**	Samsung Electronics Co., Ltd.	
	Address	(Maetan-dong) 129, Samsung-ro, Yeongtong-gu, Suwon-si, Gyeonggi-do, 16677, Korea	
	Date of receipt	May 9, 2022	
EUT	**Type of device**	■ All other receivers subject to Part 15 ☐ Class B personal computers and peripherals ■ Other Class B digital devices and peripherals ☐ FM Broadcast Receiver	
	Equipment authorization	■ Certification ☐ Supplier's Declaration of Conformity	
	FCC ID	A3LSMR915	
	Kind of product	Smart Wearable	
	Model No.	SM-R915U	
	Variant Model No.	Refer to clause 4.6	
	Manufacturer	**Samsung Electronics Vietnam Co., Ltd.** Yenphong 1 - I.P Yentrung Commune, Yenphong Dist., Bac Ninh Province, Vietnam **AG TECH CO., LTD** Lot G3, Que Vo Industrial Park(Expanded Area), Nam Son Ward, Bac Ninh City, Bac Ninh Province, Vietnam	
Applied Standards		47 CFR Part 15, Subpart B, Class B / ANSI C63.4-2014	
Test Period		May 9, 2022 ~ May 12, 2022	
Issue date		May 13, 2022	

Test result : Complied

The equipment under test has found to be compliant with the applied standards.
(Refer to the attached test result for more detail.)

Tested by : Soo-Joon Kim S. J. Kim	**Reviewed by** : Chang-Eun Park C-E-Park

The test results in this report only apply to the tested sample. This report must not be reproduced, except in full, without written permission from Global CS center. * Not KOLAS report

Samsung Electronics Co., Ltd., Global CS Center
(Maetan dong) 129, Samsung-ro, Yeongtong-Gu, Suwon-Si,Gyeonggi-Do 16677, Korea

Table of Contents

1. Report Information 3

1.1 Revision history 3

2. Summary of test results 3

2.1 Emission 3

3. General Information 3

3.1 Test facility 3

4. Test Setup configuration 4

4.1 Test Peripherals 4

4.2 EUT operating mode 5

4.3 Details of Sampling 5

4.4 Used cable description 6

4.5 Test arrangement 7

4.6 EUT Description 10

4.7 EUT Frequencies 10

4.8 Test configuration and condition 11

4.9 Measurement uncertainty 11

5. Results of individual test 12

5.1 Conducted Emission 12

5.2 Radiated Emission 16

This report must not be reproduced, except in full, without written permission from Global CS Center.

1. Report Information

1.1 Revision history

No.	Date of Issue	Revised detailed information
Issue 0	May 13, 2022	There are no revisions and this version is basic test report.

※ Remark
Only compliance with Part 15B (Section 15.107 Conducted limits) requirements for the receiver part of the licensed transmitter (equipment code CXX) is covered by this report.

2. Summary of test results

2.1 Emission

The EUT has been tested according to the following specifications:

Applied	Test type	Applied standard	Result
■	Conducted Emission (Mains port)	47 CFR Part 15 Subpart B / ANSI C63.4-2014 (Class B)	Complied
■	Radiated Emission		Complied

3. General Information

3.1 Test facility

The Global CS Center is located on Samsung Electronics Co., Ltd. at (Maetan-dong) 129, Samsung-ro, Yeongtong-gu, Suwon-si, Gyeonggi-do, 16677, Korea.
All testing are performed in Semi-anechoic chambers conforming to the site attenuation characteristics defined by ANSI C63.4, CISPR 32, CISPR 16-1-4 and Shielded rooms.
And all antennas are properly calibrated using ANSI C63.5:2017.

The Global CS Center is an ISO/IEC 17025 accredited testing laboratory by the National Radio Research Agency with designation No. KR0004. for EMC testing.

This report must not be reproduced, except in full, without written permission from Global CS Center.

4. Test Setup configuration

4.1 Test Peripherals

The cables used for these peripherals are either permanently attached by the peripheral manufacturer or coupled with an assigned cable as defined below.
The following is a listing of the EUT and peripherals utilized during the performance of EMC test:

Description	Model No.	Serial No.	Manufacturer / Trademark	FCC ID
Smart Wearable	SM-R915U	-	SAMSUNG	A3LSMR915
Battery	EB-BR910ABY	-	SDI	-
Wireless Charger	EP-OR900	RF7T2204185RTC	RF TECH	A3LEPOR900
Laptop Computer	Latitude5580	1WYRYM2	Dell	DoC
Laptop Computer	Latitude5580	D3HRYM2	Dell	DoC
Laptop AC Adapter	LA65NM130	5DEA	Dell	DoC
Laptop AC Adapter	LA65NM130	5B3C	Dell	DoC
Mouse	AA-SM7PCPB	CN57BA5903634AD V8JJCD4371	SAMSUNG	DoC
Mouse	SMH-210UB	TAKGA05788Z	SAMSUNG	DoC
Router	DIR-806A	RF0F1D8018454	D-Link	DoC
Router	DIR-806A	RF0F1D8011504	D-Link	DoC
Travel Adapter	EP-TA800	R37N9AQ96L8SE3	SoluM	-

This report must not be reproduced, except in full, without written permission from Global CS Center.

4.2 EUT operating mode

To achieve compliance applied standard specification including CXX, and JAB requirement, the following mode(s) were made during compliance testing:

4.2.1 Conducted Emission

No.	Operating mode
1	Wireless charging (w/TA) + Cellular receiver (LTE FDD26 Center Frequency)
2	Audio playback from internal memory + Wireless charging (w/TA)
3	Wireless charging (w/USB port of laptop computer)

4.2.2 Radiated Emission

No.	Operating mode
1	Wireless charging (w/TA)
2	Audio playback from internal memory
3	Wireless charging (w/USB port of laptop computer)

4.3 Details of Sampling

Customer selected, single unit.

This report must not be reproduced, except in full, without written permission from Global CS Center.

4.4 Used cable description

The EUT is configured, installed, arranged and operated in a manner consistent with typical applications. Interface cables/loads/devices are connected to at least one of each type of interface port of the EUT, and where practical, each cable shall be terminated in a device typical of actual usage. The type(s) of interconnecting cables to be used and the interface port (of the EUT) to which these were connected:

Connected cable	Length [m]	Shielded [Y/N]	Note
Wireless Charger Cable	0.8	Y	For Wireless Charger
Power	1.8	N	From Laptop Computer to AC Adapter
Power	1.5	N	For Laptop AC Adapter
LAN	1.5	N	From Laptop Computer to Router
USB	0.8	Y	From Laptop Computer to Router for DC Power
USB	1.8	Y	From Laptop Computer to Mouse

This report must not be reproduced, except in full, without written permission from Global CS Center.

Form No.: SRA-TRF-46/11

4.5 Test arrangement

4.5.1 Conducted Emission

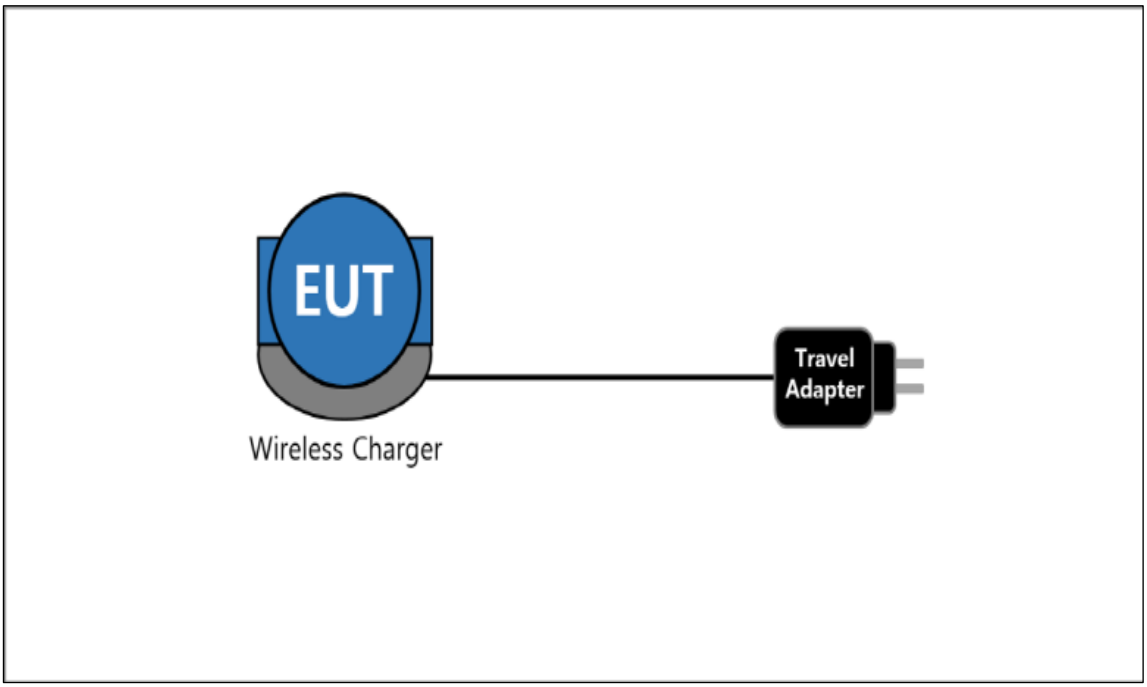

[Mode 1 – 2]

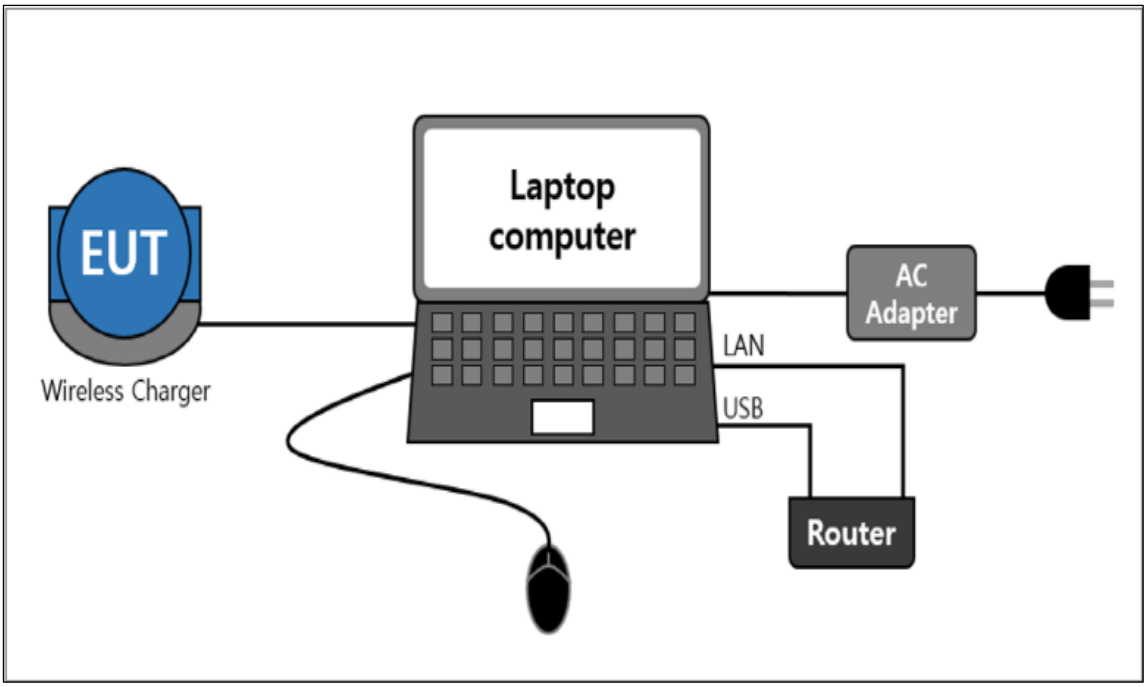

[Mode 3]

This report must not be reproduced, except in full, without written permission from Global CS Center.

4.5.2 Radiated Emission

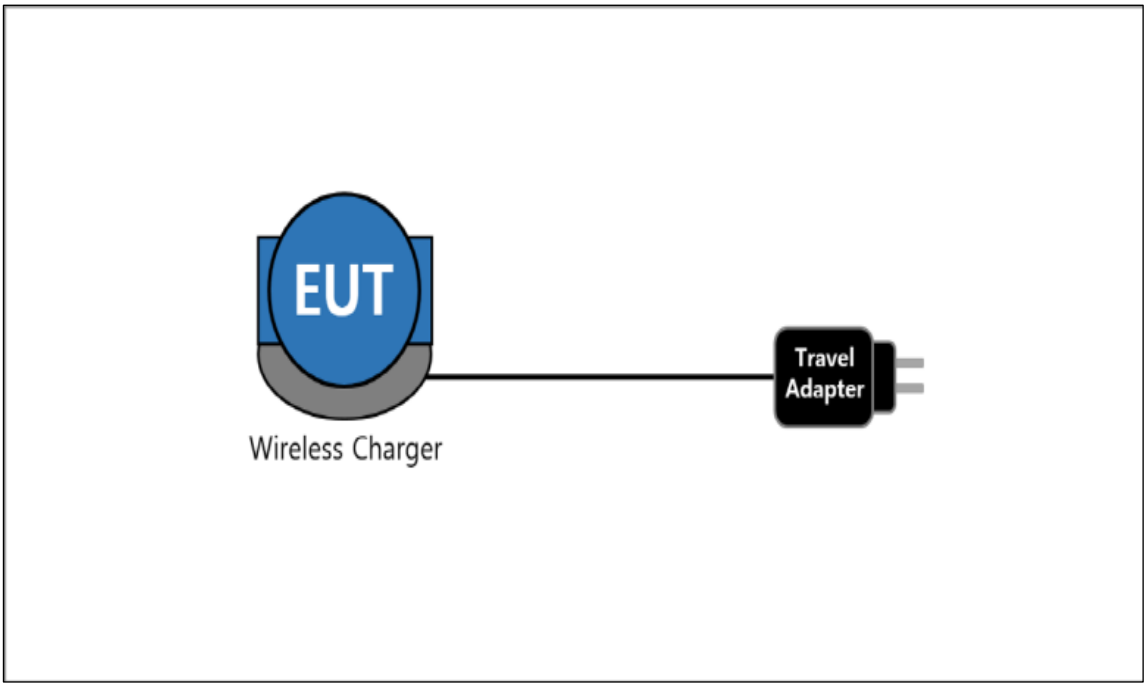

[Mode 1]

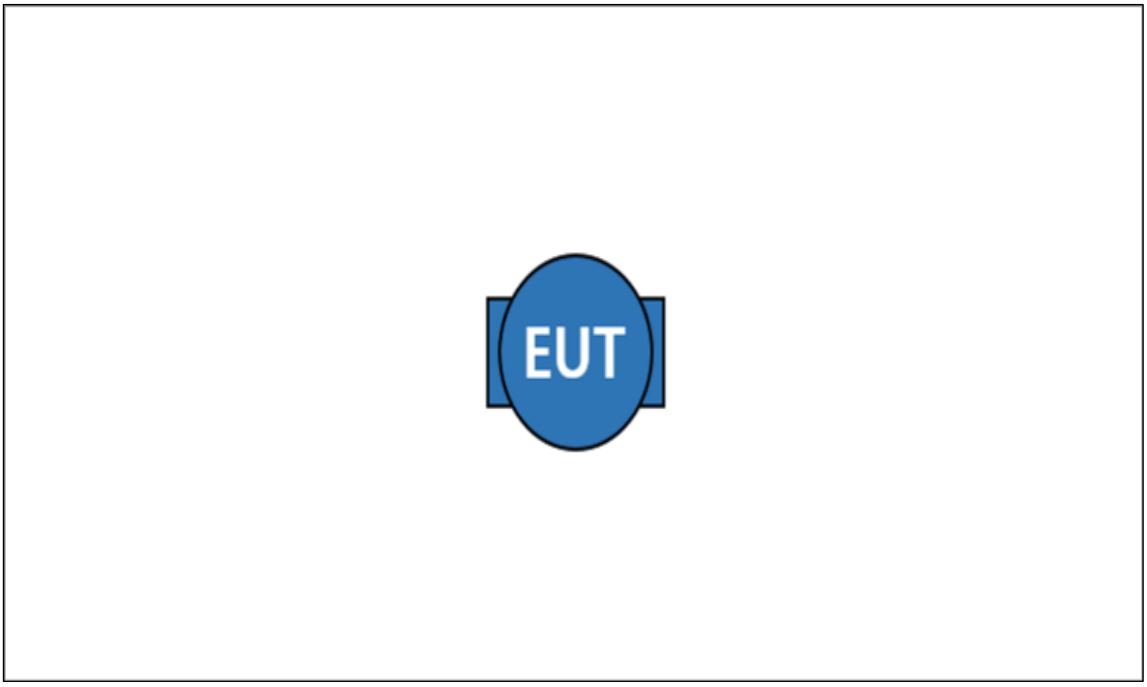

[Mode 2]

This report must not be reproduced, except in full, without written permission from Global CS Center.

Form No.: SRA-TRF-46/11

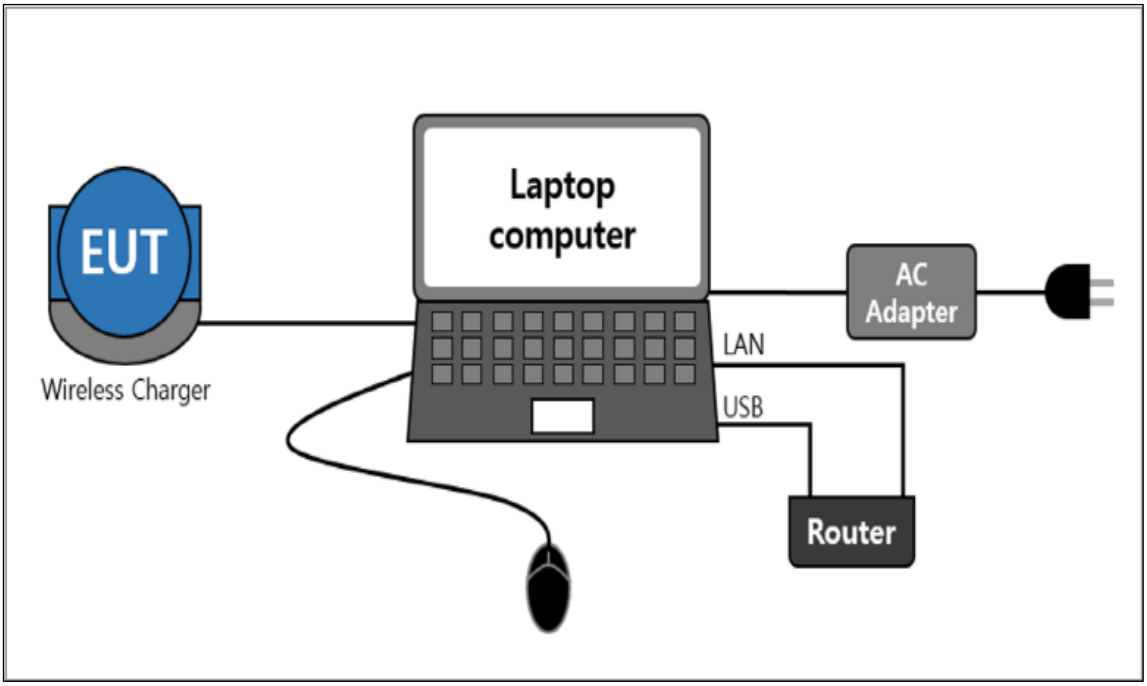

[Mode 3]

This report must not be reproduced, except in full, without written permission from Global CS Center.

4.6 EUT Description

The EUT is a watch type smart wearable which can operate on WCDMA FDD 2/4/5, LTE FDD 2/4/5/12/13/25/26/66/71, and incorporates a Bluetooth, Wi-Fi (802.11 b/g/n/a), Audio, GNSS, NFC and Wireless Charging.

4.6.1 The variant models

- SM-R915F

4.7 EUT Frequencies

The highest frequencies (Generated and used)	Frequency [MHz]
Wi-Fi	5 825

This report must not be reproduced, except in full, without written permission from Global CS Center.

4.8 Test configuration and condition

The system was configured for testing in a typical fashion that a customer would normally use. Cables were attached to each of the available I/O Ports. Where applicable, peripherals were attached to the I/O cables.

The EUT was investigated in three orientations and the worst case orientation is reported.

RX mode(850MHz) testing for AC conducted emission test was performed with the LTE FDD26 RX Test mode at center frequency. All licensed communication (850MHz) RX mode, GSM/WCDMA/LTE, test results are not significantly different.

The audio(1kHz sound) were repetitively played.

The EUT was charged with wireless charger connected to travel adapter or USB port of laptop computer.

Power source for the EUT operating was supplied by CVCF made by the Pacific Corp.

- Test Voltage : AC 120 V, 60 Hz

4.9 Measurement uncertainty

Where relevant, the following measurement uncertainty levels have been estimated for tests performed on the apparatus : (According to CISPR 16-4-2 and UKAS M3003)

Test type		**Measurement uncertainty (C.L. approximately 95 %, *k* = 2)**
Conducted Emission	AC Mains	2.83 dB
Radiated Emission (Below 1 GHz)	Horizontal	4.62 dB
	Vertical	5.79 dB
Radiated Emission (Above 1 GHz)	Horizontal	4.99 dB
	Vertical	4.99 dB

* Remark

1) The values for uncertainty of conducted and radiated emissions are less than the Corresponding values of Ucispr given in CISPR 16-4-2. Therefore no adjustment of measurement results is necessary when comparing them with the relevant limits.

This report must not be reproduced, except in full, without written permission from Global CS Center.

5. Results of individual test

5.1 Conducted Emission

The EUT is connected to a LISN via travel adapter. If the EUT is connected to the Laptop Computer USB port, the Laptop AC adapter is connected to a LISN.
Both conducted lines are measured in Quasi-Peak and CISPR-Average mode, including the worst-case data points for each tested configuration. The EUT measured in accordance with the methods described in standards.

Limits for Conducted emission at the mains ports of Class B

Frequency range Limits [MHz]	Resolution Bandwidth [kHz]	Limits [dB(μV)]	
		Quasi-peak	Average
0.15 to 0.50	**9**	**66 to 56**	**56 to 46**
0.50 to 5	**9**	**56**	**46**
5 to 30	**9**	**60**	**50**
NOTE 1 The lower limit shall apply at the transition frequency. NOTE 2 The limit decreases linearly with the logarithm of the frequency in the range 0.15 MHz to 0.50 MHz.			

5.1.1 Test instrumentation

EMC No.	Test Instrument	Model name	Manufacturer	Serial No.	Next Calibration	
					Date	Interval (Month)
E5I-006	LTE Communicator	CMW500	R&S	132728	2023-04-12	12
E5I-127	Two-Line V-Network	ENV216	R&S	102061	2023-01-17	12
E5I-016	EMI Test Receiver	ESU8	R&S	100482	2022-06-03	12
-	Test software	EMC32	R&S	Ver 10.60.20	-	-

5.1.2 Temperature and humidity condition

Test date	2022-05-09	**Test engineer**	Soo-Joon Kim
Climate condition	Ambient temperature	(24.7 ± 0.5) ℃	Limit (15.0 to 35.0) ℃
	Humidity	(29.3 ± 0.5) % R.H.	Limit (25.0 to 75.0) % R.H.
	Atmospheric pressure	(100.9 ± 0.5) kPa	Limit (86.0 to 106.0) kPa
Test place	Shield Room (SR8)		

This report must not be reproduced, except in full, without written permission from Global CS Center.

5.1.3 Test Results

□ Operating Mode 1: AC Mains

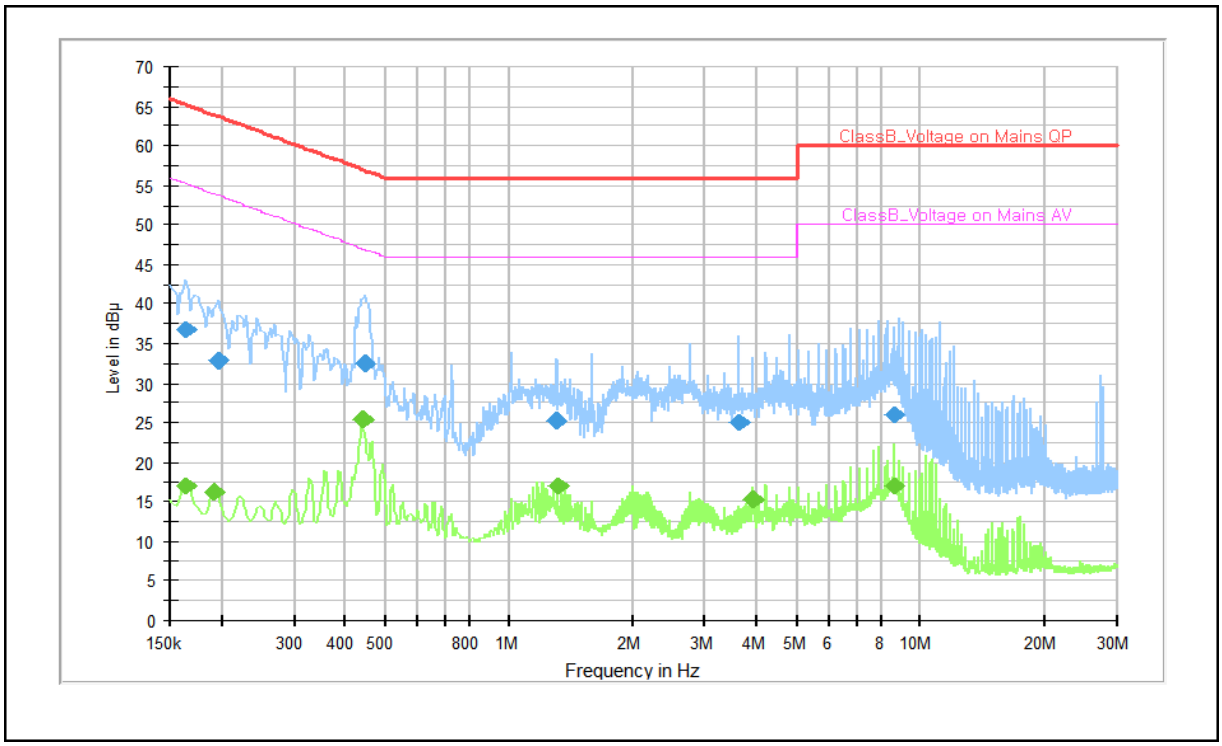

Note 1) Two graphs measured for both Live(L1) and Neutral(N) of the LISN are combined into one graph.

QP / CAV final measurement results table:

Frequency (MHz)	QP (dBµV)	CAV (dBµV)	Limit (dBµV)	Margin (dB)	Line	Corr. (dB)
0.164	36.7	---	65.3	28.6	L1	10.2
0.164	---	17.0	55.3	38.3	L1	10.2
0.193	---	16.2	53.9	37.8	L1	10.1
0.197	32.8	---	63.7	30.9	N	10.0
0.440	---	25.4	47.1	21.6	L1	10.2
0.445	32.5	---	57.0	24.4	N	10.1
1.307	25.3	---	56.0	30.7	L1	10.0
1.313	---	17.1	46.0	28.9	L1	10.0
3.631	25.1	---	56.0	30.9	L1	10.0
3.919	---	15.2	46.0	30.8	L1	10.0
8.565	26.0	---	60.0	34.0	L1	10.1
8.565	---	17.1	50.0	32.9	L1	10.1

Note 2) Level (QP and/or CAV) = Meter Reading (QP and/or CAV) + Corr. (LISN Insertion Loss + Cable Loss)
Margin (QP and/or CAV) = Limit – Level (QP and/or CAV)
QP = Quasi-Peak, CAV = CISPR-Average, Corr. = Correction Factor

This report must not be reproduced, except in full, without written permission from Global CS Center.

□ Operating Mode 2: AC Mains

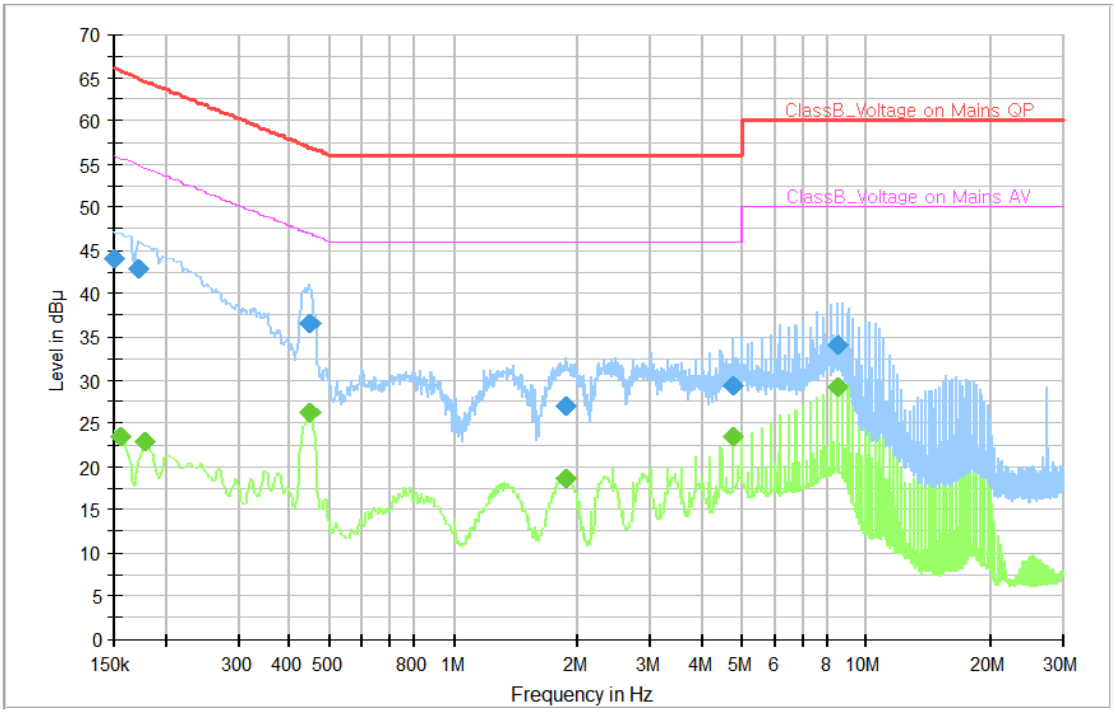

Note 1) Two graphs measured for both Live(L1) and Neutral(N) of the LISN are combined into one graph.

QP / CAV final measurement results table:

Frequency (MHz)	QP (dBµV)	CAV (dBµV)	Limit (dBµV)	Margin (dB)	Line	Corr. (dB)
0.150	44.0	---	66.0	22.0	N	9.9
0.155	---	23.5	55.8	32.2	N	10.0
0.173	42.8	---	64.8	22.0	L1	10.3
0.177	---	22.9	54.6	31.8	L1	10.3
0.445	---	26.3	47.0	20.7	L1	10.2
0.445	36.6	---	57.0	20.4	N	10.1
1.867	---	18.6	46.0	27.4	L1	10.0
1.869	27.1	---	56.0	28.9	L1	10.0
4.742	---	23.4	46.0	22.6	L1	10.0
4.742	29.4	---	56.0	26.6	L1	10.0
8.480	---	29.1	50.0	20.9	L1	10.1
8.480	34.1	---	60.0	25.9	L1	10.1

Note 2) Level (QP and/or CAV) = Meter Reading (QP and/or CAV) + Corr. (LISN Insertion Loss + Cable Loss)
Margin (QP and/or CAV) = Limit – Level (QP and/or CAV)
QP = Quasi-Peak, CAV = CISPR-Average, Corr. = Correction Factor

This report must not be reproduced, except in full, without written permission from Global CS Center.

□ Operating Mode 3: AC Mains

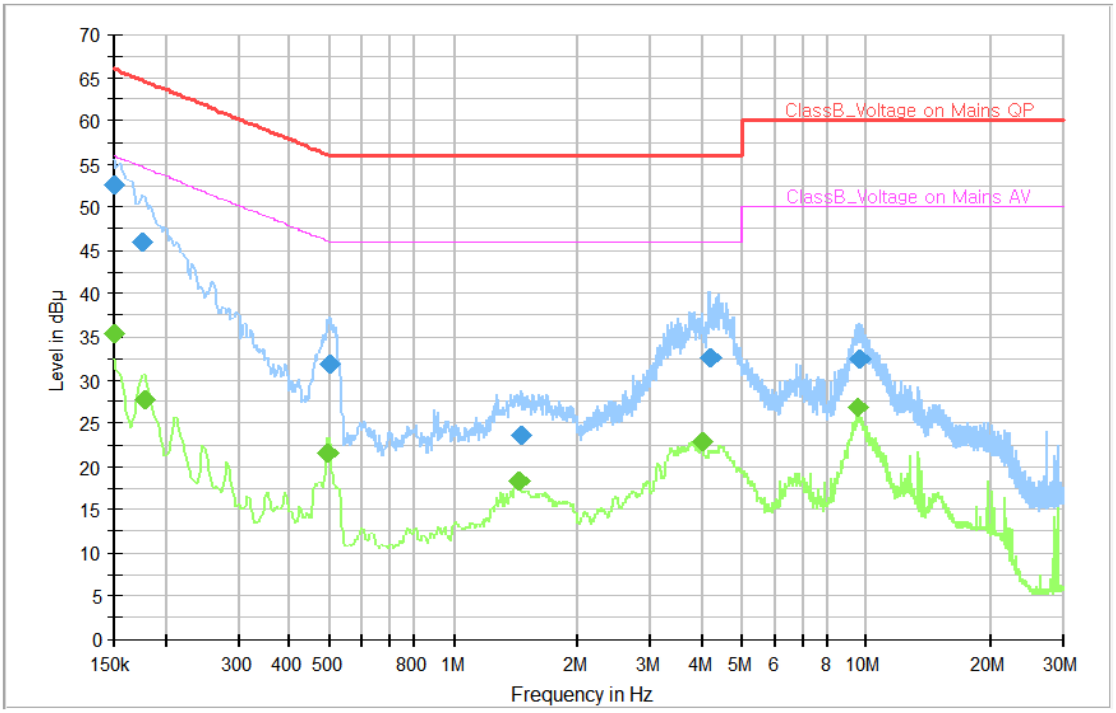

Note 1) Two graphs measured for both Live(L1) and Neutral(N) of the LISN are combined into one graph.

QP / CAV final measurement results table:

Frequency (MHz)	QP (dBµV)	CAV (dBµV)	Limit (dBµV)	Margin (dB)	Line	Corr. (dB)
0.150	---	35.4	56.0	20.6	N	9.8
0.150	52.6	---	66.0	13.4	N	9.8
0.175	46.0	---	64.7	18.7	N	10.1
0.177	---	27.7	54.6	27.0	L1	10.1
0.497	---	21.5	46.1	24.6	L1	10.0
0.501	31.9	---	56.0	24.1	L1	10.0
1.439	---	18.3	46.0	27.7	N	9.8
1.462	23.7	---	56.0	32.3	N	9.8
4.009	---	22.9	46.0	23.1	N	9.8
4.166	32.6	---	56.0	23.4	N	9.8
9.535	---	26.8	50.0	23.2	L1	9.9
9.647	32.4	---	60.0	27.6	L1	9.9

Note 2) Level (QP and/or CAV) = Meter Reading (QP and/or CAV) + Corr. (LISN Insertion Loss + Cable Loss)
Margin (QP and/or CAV) = Limit – Level (QP and/or CAV)
QP = Quasi-Peak, CAV = CISPR-Average, Corr. = Correction Factor

This report must not be reproduced, except in full, without written permission from Global CS Center.

5.2 Radiated Emission

The following data lists the significant emission frequencies, measured levels, correction factors (for antenna and cables), orientation of table, polarization and height of antenna, the corrected reading, the limit, and the amount of margin.

Peak measurements were made over the changeable frequency range 30 MHz to 1 GHz at a measurement distance of 3 m for the following antenna and turntable arrangements:

Antenna Height [cm]	Antenna Polarization	Resolution Bandwidth [kHz]	Video Bandwidth [kHz]	Turntable position [degrees]
100 ~ 400	Horizontal, Vertical	120	300	Continuous

Measurements within 6 dB of the limit were then maximized by adjusting turntable position.
Final measurements were made using quasi-peak detector.

Peak/CISPR-Average measurements were made over the changeable frequency range 1 GHz to 40 GHz or 5th harmonics of the highest frequency generated or used in the device or on which the device operates or tunes at a measurement distance of 3 m for the following antenna and turntable arrangements. The measurements above 1 GHz were performed with the bore-sighting antenna aimed at the EUT.

Antenna Height [cm]	Antenna Polarization	Resolution Bandwidth [MHz]	Video Bandwidth [MHz]	Turntable position [degrees]
100 ~ 400	Horizontal, Vertical	1	3	Continuous

Measurements within 6 dB of the limit were then maximized by adjusting turntable position.
Final measurements were made using peak and CISPR-average detectors.

Limits for Radiated emission of Class B at a measuring distance of 3 m and 10 m

Frequency range Limits [MHz]	Field Strength		
	3 m [μV/m]	3 m [dB(μV/m)]	10 m [dB(μV/m)]
30 to 88	100	40.0	29.5
88 to 216	150	43.5	33.0
216 to 960	200	46.0	35.5
Above 960	500	54.0	43.5

Note) Distance correction fomula from D1(3m) to D2(10m)
: Limit at D2 = Limit at D1 + 20Log(D1 /D2)
Results checked manually; and points close to the limit line were re-measured.

This report must not be reproduced, except in full, without written permission from Global CS Center.

5.2.1 Test instrumentation

EMC No.	Test Instrument	Model name	Manufacturer	Serial No.	Next Calibration	
					Date	Interval (Month)
E5I-021	EMI Test Receiver	ESU40	R&S	100376	2023-01-28	12
E5I-020	EMI Test Receiver	ESU40	R&S	100375	2022-09-23	12
E5I-072	BiLog Antenna	CBL6112D	TESEQ	36009	2022-05-15	24
E5I-223	6 dB Fixed Attenuator	8491B-006	Agilent	58359	2022-05-15	24
E5I-075	Preamplifier	310N	SONOMA	332018	2022-05-26	12
E5I-035	Horn Antenna	HF907	R&S	100506	2022-09-28	12
E5I-039	Signal Conditioning Unit	SCU-18	R&S	10211	2023-04-18	12
E5I-243	WideBand Horn Antenna	QMS-00880	STEATITE	25187	2022-11-17	12
E5I-042	Signal Conditioning Unit	SCU-40A	R&S	10004	2022-09-10	12
-	Test software	EP7RE	TOYO	Ver 8.0.20	-	-
-	Test software	EMC32	R&S	Ver 9.25.00	-	-

5.2.1 Temperature and humidity condition

Test date	2022-05-10, 2022-05-12	**Test engineer**	Soo-Joon Kim
Climate condition	Ambient temperature	(23.2 ± 0.5) ℃	Limit (15.0 to 35.0) ℃
	Humidity	(35.9 ± 0.5) % R.H.	Limit (25.0 to 75.0) % R.H.
	Atmospheric pressure	(101.6 ± 0.5) kPa	Limit (86.0 to 106.0) kPa
Test place	Semi-Anechoic Chamber (SAC5)		

This report must not be reproduced, except in full, without written permission from Global CS Center.

5.2.3 Test Results

□ Operating Mode 1

- Frequencies below 1 GHz

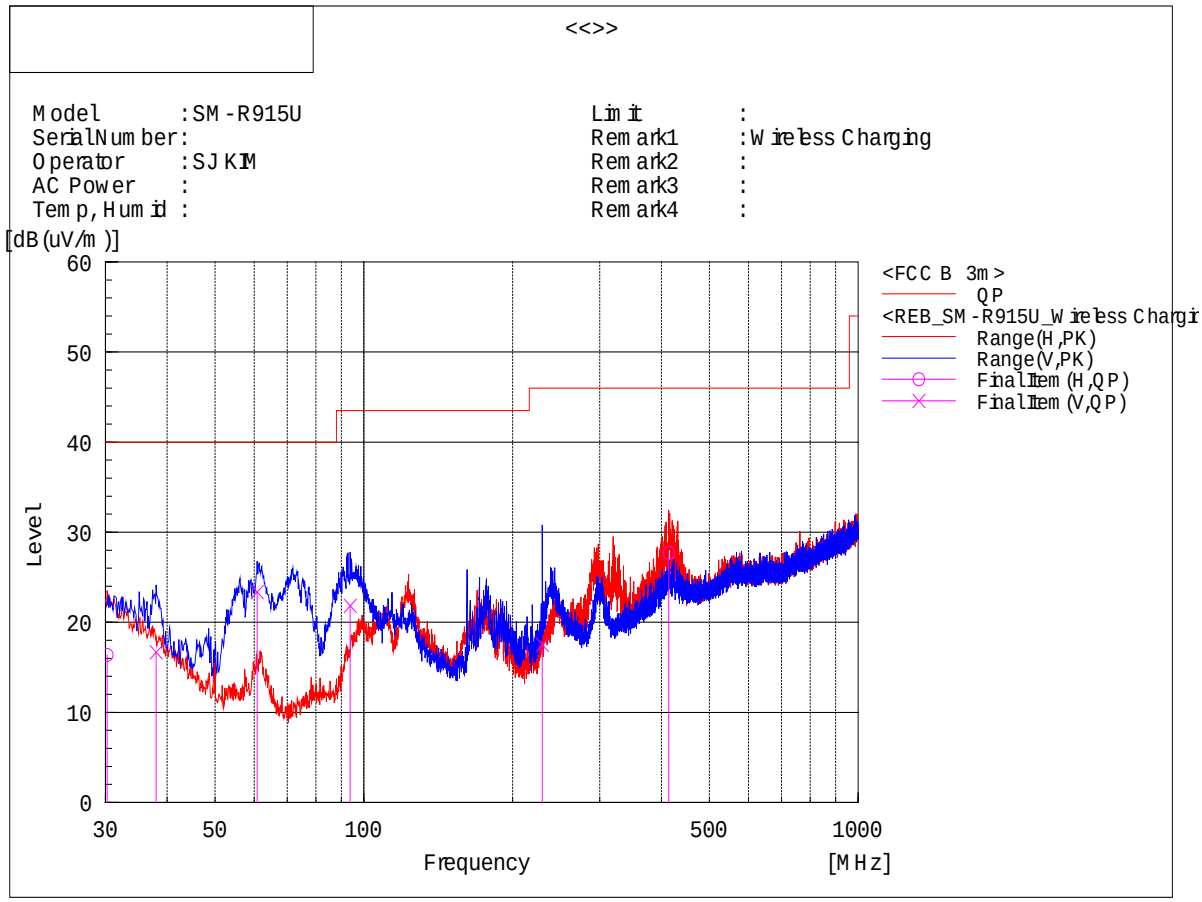

Final Result

No.	Frequency [MHz]	(P)	Reading QP [dB(uV)]	c.f [dB(1/m)]	Result QP [dB(uV/m)]	Limit QP [dB(uV/m)]	Margin QP [dB]	Height [cm]	Angle [deg]	Remark
1	30.243	H	23.0	-6.6	16.4	40.0	23.6	101	176	
2	38.003	V	27.2	-10.5	16.7	40.0	23.3	154	313	
3	60.798	V	42.0	-18.6	23.4	40.0	16.6	100	70	
4	93.778	V	37.0	-15.1	21.9	43.5	21.6	104	360	
5	229.578	V	31.3	-13.8	17.5	46.0	28.5	100	2	
6	413.999	H	34.0	-6.3	27.7	46.0	18.3	100	179	

Note1) Receiving antenna polarization : Horizontal, Vertical

Test Distance : 3 m, Antenna Height : 1 to 4 meters

Result (QP) = Reading (QP) + c.f (Antenna Factor + Cable Loss - Amp. Gain)

Margin (QP) = Limit – Level (QP)

QP = Quasi-Peak, c.f = Correction Factor

This report must not be reproduced, except in full, without written permission from Global CS Center.

Form No.: SRA-TRF-46/11

- Frequencies above 1 GHz

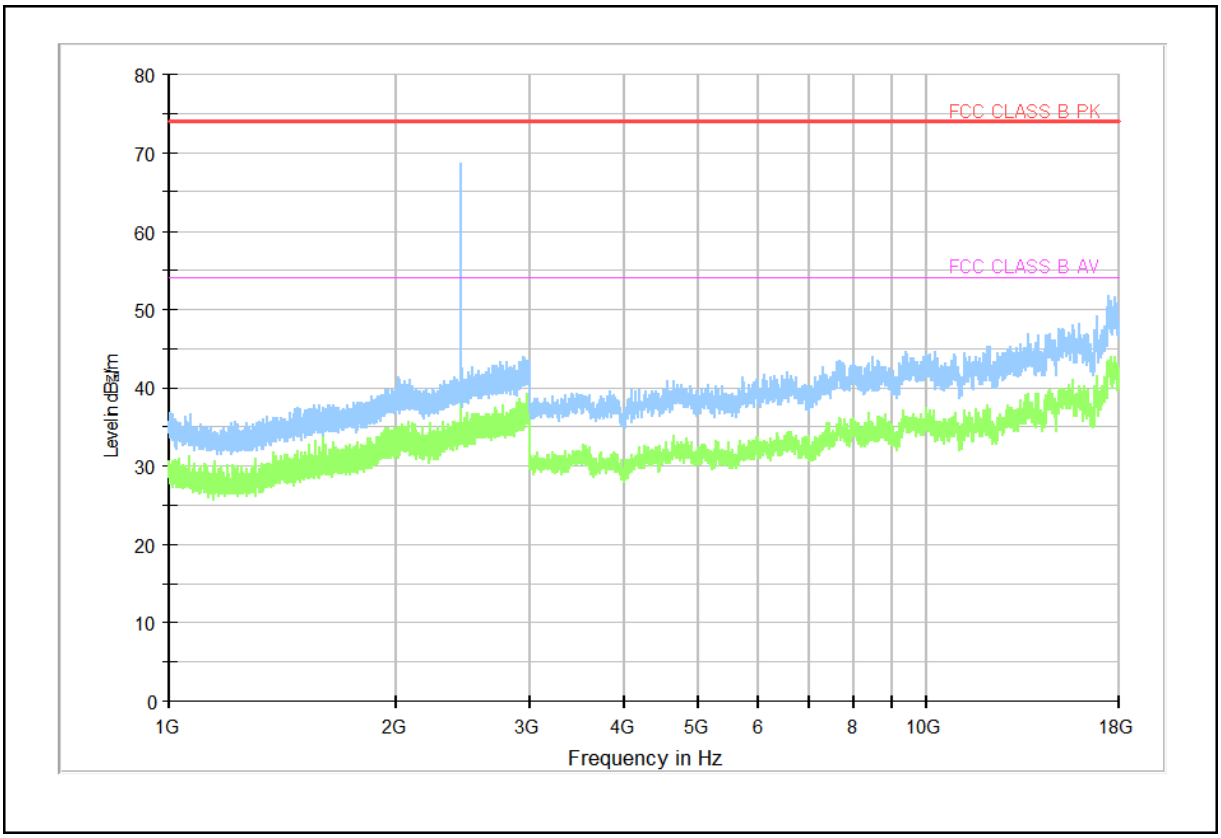

Note 1) We have also tested from 18 GHz to 30 GHz and found no emissions.

Note 2) Receiving antenna polarization : Horizontal, Vertical

Test Distance : 3 m, Antenna Height : 1 to 4 meters

Level (PK and/or CAV) = Reading (PK and/or CAV) + Corr. (Antenna Factor + Cable Loss - Amp. Gain)

Margin (PK and/or CAV) = Limit – Level (PK and/or CAV)

PK = Peak, CAV = CISPR-Average, Corr. = Correction Factor

Note 3) Radiated emissions (Tx / Rx frequency) from the transceiver shall be ignored.

- Data transmission in the 2.4 GHz ISM band (Bluetooth/Wi-Fi)

: Operating frequencies (2 400 ~ 2 483.5) MHz

This report must not be reproduced, except in full, without written permission from Global CS Center.

□ Operating Mode 2

- Frequencies below 1 GHz

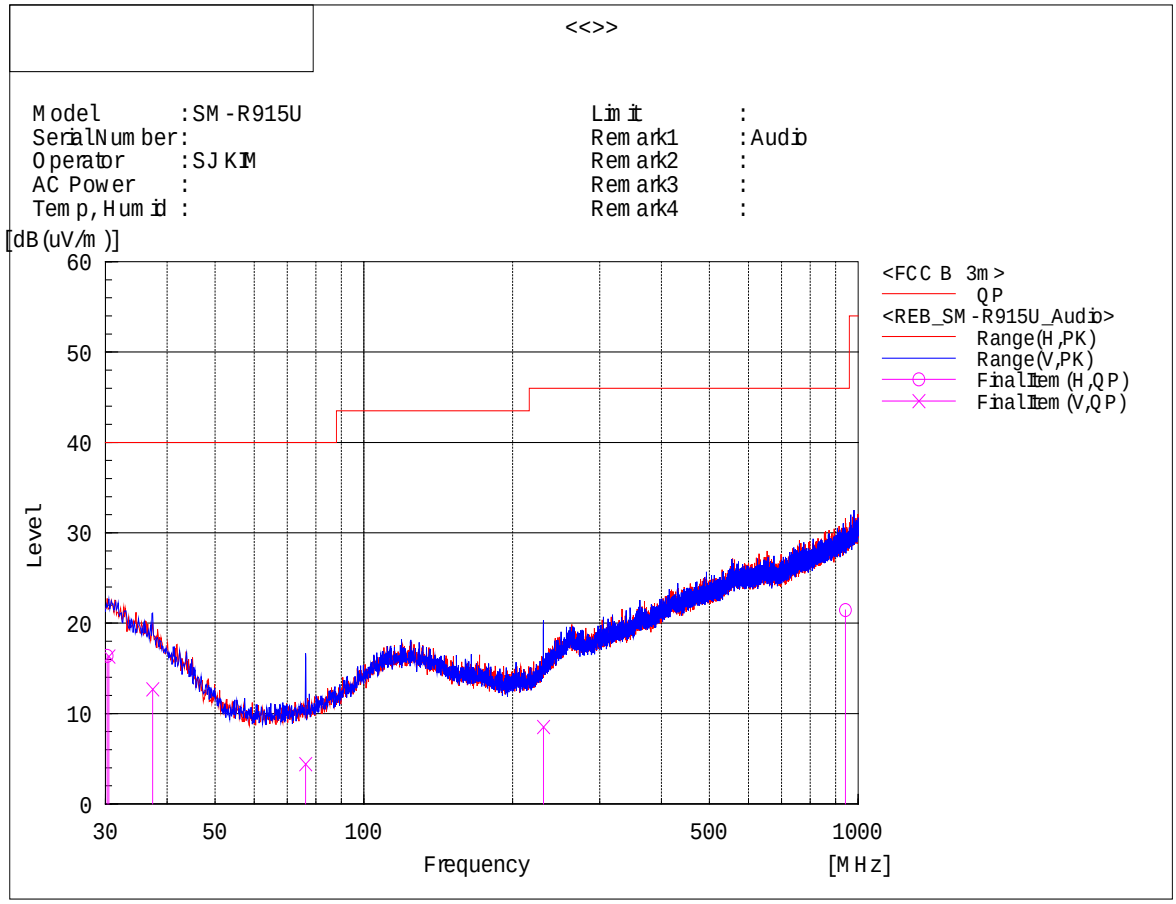

Final Result

No.	Frequency [MHz]	(P)	Reading QP [dB(uV)]	c.f [dB(1/m)]	Result QP [dB(uV/m)]	Limit QP [dB(uV/m)]	Margin QP [dB]	Height [cm]	Angle [deg]	Remark
1	30.243	H	23.0	-6.6	16.4	40.0	23.6	102	169	
2	30.485	V	23.0	-6.7	16.3	40.0	23.7	103	92	
3	37.396	V	22.9	-10.2	12.7	40.0	27.3	103	103	
4	76.196	V	22.2	-17.8	4.4	40.0	35.6	102	273	
5	230.790	V	22.2	-13.7	8.5	46.0	37.5	393	227	
6	942.527	H	20.7	0.7	21.4	46.0	24.6	249	18	

Note1) Receiving antenna polarization : Horizontal, Vertical

Test Distance : 3 m, Antenna Height : 1 to 4 meters

Result (QP) = Reading (QP) + c.f (Antenna Factor + Cable Loss - Amp. Gain)

Margin (QP) = Limit – Level (QP)

QP = Quasi-Peak, c.f = Correction Factor

This report must not be reproduced, except in full, without written permission from Global CS Center.

Form No.: SRA-TRF-46/11

- Frequencies above 1 GHz

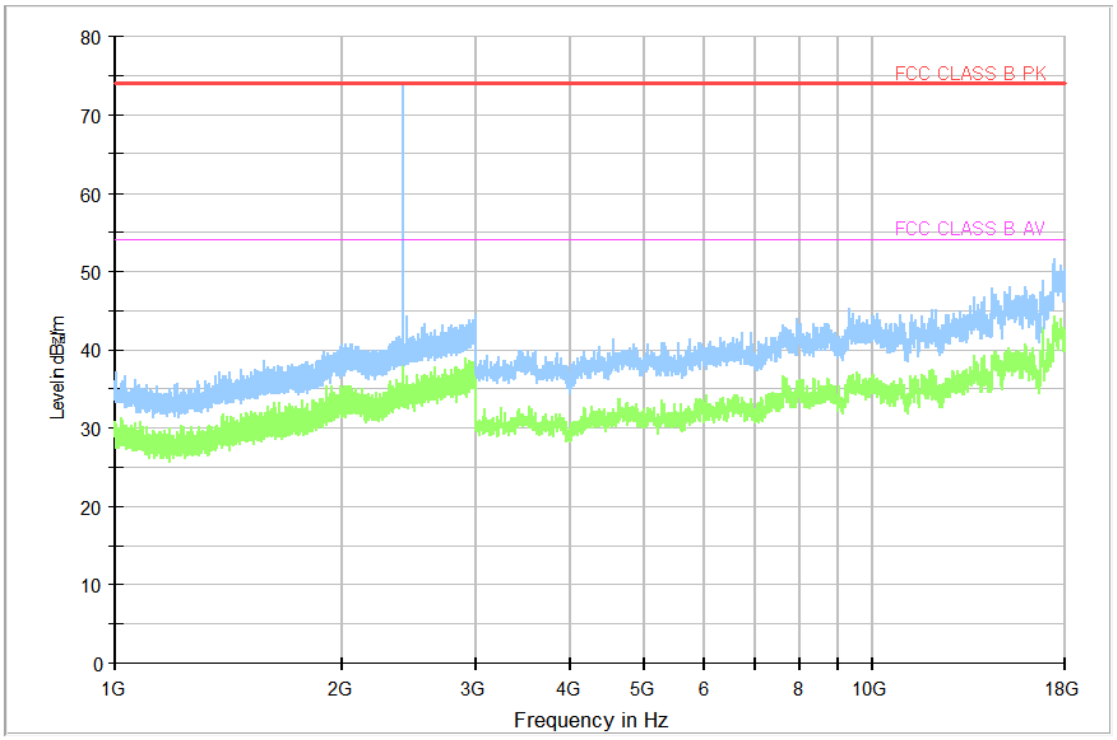

Note 1) We have also tested from 18 GHz to 30 GHz and found no emissions.

Note 2) Receiving antenna polarization : Horizontal, Vertical

Test Distance : 3 m, Antenna Height : 1 to 4 meters

Level (PK and/or CAV) = Reading (PK and/or CAV) + Corr. (Antenna Factor + Cable Loss - Amp. Gain)

Margin (PK and/or CAV) = Limit – Level (PK and/or CAV)

PK = Peak, CAV = CISPR-Average, Corr. = Correction Factor

Note 3) Radiated emissions (Tx / Rx frequency) from the transceiver shall be ignored.

- Data transmission in the 2.4 GHz ISM band (Bluetooth/Wi-Fi)

: Operating frequencies (2 400 ~ 2 483.5) MHz

This report must not be reproduced, except in full, without written permission from Global CS Center.

□ Operating Mode 3

- Frequencies below 1 GHz

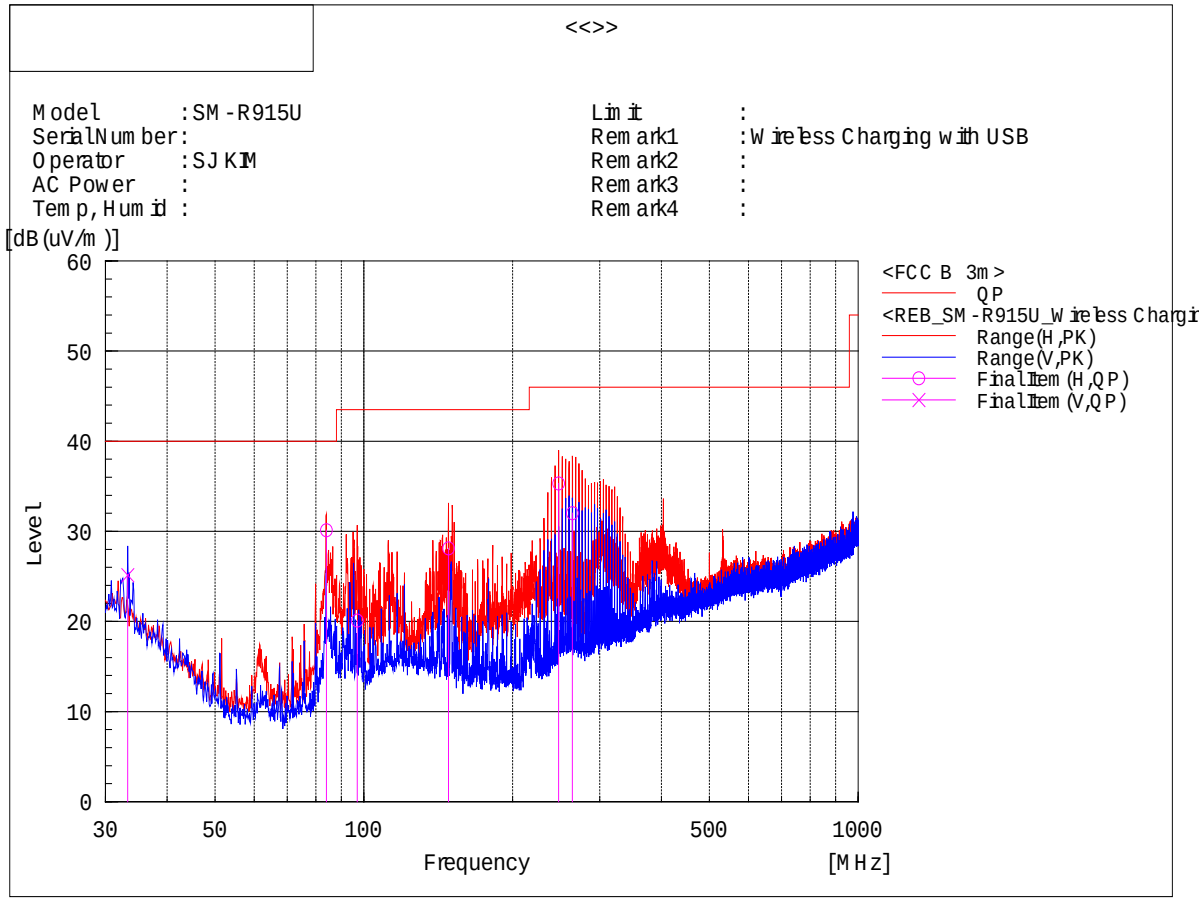

Final Result

No.	Frequency [MHz]	(P)	Reading QP [dB(uV)]	c.f [dB(1/m)]	Result QP [dB(uV/m)]	Limit QP [dB(uV/m)]	Margin QP [dB]	Height [cm]	Angle [deg]	Remark
1	33.274	V	33.2	-8.1	25.1	40.0	14.9	100	33	
2	83.956	H	47.0	-16.9	30.1	40.0	9.9	214	271	
3	96.930	H	34.6	-14.5	20.1	43.5	23.4	267	296	
4	148.340	H	41.7	-13.6	28.1	43.5	15.4	168	340	
5	247.765	H	46.4	-11.1	35.3	46.0	10.7	121	272	
6	264.134	H	42.2	-10.2	32.0	46.0	14.0	102	280	

Note1) Receiving antenna polarization : Horizontal, Vertical

Test Distance : 3 m, Antenna Height : 1 to 4 meters

Result (QP) = Reading (QP) + c.f (Antenna Factor + Cable Loss - Amp. Gain)

Margin (QP) = Limit – Level (QP)

QP = Quasi-Peak, c.f = Correction Factor

This report must not be reproduced, except in full, without written permission from Global CS Center.

Form No.: SRA-TRF-46/11

- Frequencies above 1 GHz

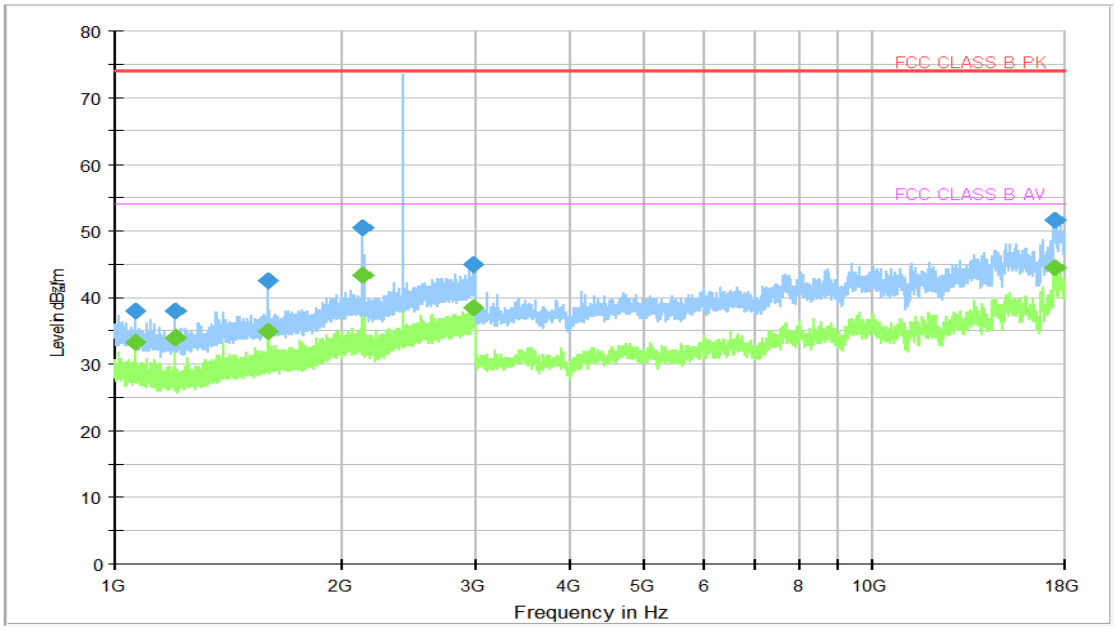

Frequency (MHz)	PK (dBµV/m)	CAV (dBµV/m)	Limit (dBµV/m)	Margin (dB)	Height (cm)	Pol	Azimuth (deg)	Corr. (dB)
1 061.800	38.00	---	74.00	36.00	100.10	V	288.00	7.31
1 061.800	---	33.32	54.00	20.68	100.50	V	288.00	7.31
1 199.800	---	33.90	54.00	20.10	101.70	V	323.00	6.99
1 199.800	37.89	---	74.00	36.11	102.40	V	323.00	6.99
1 595.200	42.44	---	74.00	31.56	100.50	V	62.00	10.83
1 595.200	---	34.79	54.00	19.21	101.10	V	62.00	10.83
2 125.800	50.42	---	74.00	23.58	100.80	H	139.00	13.83
2 125.800	---	43.37	54.00	10.63	100.50	H	139.00	13.83
2 969.000	44.86	---	74.00	29.14	100.90	H	21.00	17.86
2 971.000	---	38.36	54.00	15.64	101.20	H	157.00	17.88
17 427.000	---	44.40	54.00	9.60	100.70	V	85.00	36.82
17 452.500	51.55	---	74.00	22.45	100.10	V	15.00	36.67

Note 1) We have also tested from 18 GHz to 30 GHz and found no emissions.

Note 2) Receiving antenna polarization : Horizontal, Vertical

Test Distance : 3 m, Antenna Height : 1 to 4 meters

Level (PK and/or CAV) = Reading (PK and/or CAV) + Corr. (Antenna Factor + Cable Loss - Amp. Gain)

Margin (PK and/or CAV) = Limit – Level (PK and/or CAV)

PK = Peak, CAV = CISPR-Average, Corr. = Correction Factor

Note 3) Radiated emissions (Tx / Rx frequency) from the transceiver shall be ignored.

- Data transmission in the 2.4 GHz ISM band (Bluetooth/Wi-Fi)

: Operating frequencies (2 400 ~ 2 483.5) MHz

This report must not be reproduced, except in full, without written permission from Global CS Center.