verify No.352346827243

위변조방지/진위확인
www.docugr.com

TEST REPORT

KCTL Inc.
65, Sinwon-ro, Yeongtong-gu,
Suwon-si, Gyeonggi-do, 16677, Korea
TEL: 82-31-285-0894 FAX: 82-505-299-8311
www.kctl.co.kr

eurofins | KCTL

1. Client

- Name : Samsung Electronics Co., Ltd.
- Address : 129, Samsung-ro, Yeongtong-gu, Suwon-si, Gyeonggi-do, 16677 Rep. of Korea
- Date of Receipt : 2022-04-06

2. Use of Report : Certification

3. Name of Product and Model : Smart Wearable
- Model Number : SM-R920
- Manufacturer and Country of Origin : Samsung Electronics Co., Ltd. / VIETNAM

4. FCC ID : A3LSMR920

5. Date of Test : 2022-05-19 ~ 2022-05-31

6. Location of Test : ■ Permanent Testing Lab ☐ On Site Testing
(Address: 65, Sinwon-ro, Yeongtong-gu, Suwon-si, Gyeonggi-do, 16677, Korea)

7. Test Standards : IEEE 1528-2013, ANSI/IEEE C95.1, KDB Publication

8. Test Results : Refer to the test result in the test report

Affirmation	Tested by Name : Choongki Lee (Signature)	Technical Manager Name : Jongwon Ma (Signature)

2022-06-08

KCTL Inc.

As a test result of the sample which was submitted from the client, this report does not guarantee the whole product quality. This test report should not be used and copied without a written agreement by KCTL Inc.

REPORT REVISION HISTORY

Date	Revision	Page No
2022-06-08	Originally issued	-

This report shall not be reproduced except in full, without the written approval of KCTL Inc. This document may be altered or revised by KCTL Inc. personnel only, and shall be noted in the revision section of the document. Any alteration of this document not carried out by KCTL Inc. will constitute fraud and shall nullify the document. This test report is a general report that does not use the KOLAS accreditation mark and is not related to KS Q ISO/IEC 17025 and KOLAS accreditation.

General remarks for test reports

Statement concerning the uncertainty of the measurement systems used for the tests

(may be required by the product standard or client)

☐ **Internal procedure used for type testing through which traceability of the measuring uncertainty has been established:**

Procedure number, issue date and title:

Calculations leading to the reported values are on file with the testing laboratory that conducted the testing.

☒ **Statement not required by the standard or client used for type testing**

1. Identification when information is provided by the customer: Information marked " # " is provided by the customer. - Disclaimer: This information is provided by the customer and can affect the validity of results.

CONTENTS

1. General information 4
2. Device information 5
3. Specific Absorption Rate 8
4. SAR Measurement Procedures 9
5. SAR Measurement Configurations 10
6. RF Exposure Limits 11
7. FCC SAR General Measurement Procedures 12
8. RF Average Conducted Output Power 15
9. System Verification 18
10. SAR Test Results 20
11. Simultaneous Transmission 23
12. SAR Measurement Variability 24
13. Measurement Uncertainty 25
14. Test Equipment Information 26
15. Test System Verification Results 27
16. Test Results 35
Appendixes List 45
Appendix A. Calibration certificate 46
Appendix B. SAR Tissue Specification 83
Appendix C. #Antenna Location & Distance 84
Appendix D. EUT Photo 85
Appendix E. Test Setup Photo 88
End of test report 88

1. General information

Client	:	Samsung Electronics Co., Ltd.
Address	:	129, Samsung-ro, Yeongtong-gu, Suwon-si, Gyeonggi-do, 16677, Rep. of Korea
Manufacturer	:	Samsung Electronics Co., Ltd.
Address	:	129, Samsung-ro, Yeongtong-gu, Suwon-si, Gyeonggi-do, 16677, Rep. of Korea
Laboratory	:	KCTL Inc.
Address	:	65, Sinwon-ro, Yeongtong-gu, Suwon-si, Gyeonggi-do, 16677, Korea
Accreditations	:	FCC Site Designation No: KR0040, FCC Site Registration No: 687132 VCCI Registration No. : R-3327, G-198, C-3706, T-1849 CAB Identifier: KR0040, ISED Number: 8035A KOLAS No.: KT231

1.1 Report Overview

This report details the results of testing carried out on the samples listed in section 2, the results contained in this test report do not relate to other samples of the same product. The manufacturer should ensure that all products in series production are in conformity with the product sample detailed in this report.

This report may only be reproduced and distributed in full. If the product in this test report is used in any configuration other than that detailed in the test report, the manufacturer must ensure the new configuration complies with all relevant standards and certification requirements. Any mention of KCTL Inc. Wireless lab or testing done by KCTL Inc. Wireless lab made in connection with the distribution or use of the tested product must be approved in writing by KCTL Inc. Wireless lab.

2. Device information

2.1 Basic description

Product Name		Smart Wearable		
Product Model Number		SM-R920		
Derivative Model		SM-R920X		
Product Manufacturer		Samsung Electronics Co., Ltd		
Product Serial Number	Radiation	R3AT400D4AT, R3AT400D21Y, R3AT400DZMM		
		R3AT400DYKB, R3AT400DVSA		
	WLAN Conduction	R3AT400FD9B		
Mode of Operation		WLAN 2.4/5 ㎓, Bluetooth, NFC(Only RX)		
Tx Freq. Range		Band & Mode	Operating Modes	Tx Frequency(㎒)
		WLAN 2.4 ㎓	Voice/Data	2 412.0 ~ 2 472.0
		U-NII-1	Voice/Data	5 180.0 ~ 5 240.0
		U-NII-2A	Voice/Data	5 260.0 ~ 5 320.0
		U-NII-2C	Voice/Data	5 500.0 ~ 5 720.0
		U-NII-3	Voice/Data	5 745.0 ~ 5 825.0
		Bluetooth	Data	2 402.0 ~ 2 480.0
TDWR Information		5.60 ㎓~ 5.65 ㎓ band (TDWR) is supported by the device.		

2.2 Summary of SAR Test Results

Band	Equipment Class	Highest Reported	
		1g SAR (W/kg)	10g SAR (W/kg)
		Next to Mouth	Extremity
WLAN 2.4 ㎓	DTS	0.19	0.22
U-NII-2A	NII	< 0.10	**0.27**
U-NII-2C	NII	< 0.10	0.16
U-NII-3	NII	< 0.10	< 0.10
Bluetooth	DSS	**0.22**	0.19
Simultaneous SAR per KDB 690783 D01v01r03		0.23	0.45

2.3 #Maximum Tune-up power

This device operates using the following maximum output power specifications. SAR values were scaled to the maximum allowed power to determine compliance per KDB Publication 447498 D01v06.

When the specified maximum output power is the same for both UNII Band1 and UNII Band 2A, begins SAR measurement in UNII band 2A; and if the highest reported SAR for U NII band 2A is ≤ 1.2W/kg, SAR is not required for U-NII-1 band for that configuration; otherwise, each band is tested independently for SAR.

2.3.1 #Maximum WLAN and Bluetooth Output Power

Band	Mode	Channel	Output Power (dB m)	
			Target	Max. Allowed
WLAN 2.4 GHz	802.11b	1~11	17.00	**18.00**
		12	10.00	**11.00**
		13	8.00	**9.00**
	802.11g	1~11	16.00	**17.00**
		12	10.00	**11.00**
		13	8.00	**9.00**
	802.11n(HT20)	1~11	16.00	**17.00**
		12	10.00	**11.00**
		13	8.00	**9.00**
NII	802.11a	All Channel	17.00	**18.00**
	802.11n(HT20)	All Channel	17.00	**18.00**

Band	Mode	Channel	Output Power (dB m)	
			Target	Max. Allowed
Bluetooth	BDR(GFSK)	All Channel	17.00	**18.00**
	EDR (π/4DQPSK)	All Channel	11.00	**12.00**
	EDR(8DPSK)	All Channel	11.00	**12.00**
	LE(GFSK)	All Channel	8.00	**9.00**

2.4 #DUT Antenna Locations

A diagram showing the location of the device antennas can be found in Appendix C.

Mode	Device Edge for SAR Testing (Front View)		
	Next to Mouth	Extremity	Edge
	Front (10㎜)	Rear (0㎜)	
WLAN 2.4 GHz	Yes	Yes	N/A
NII	Yes	Yes	N/A
Bluetooth	Yes	Yes	N/A

2.5 #Simultaneous Transmission Configurations

According to FCC KDB 447498 D01v06, transmitters are considered to be transmitting simultaneously when there is overlapping transmission, with the exception of transmissions during network hand-offs with maximum hand-off duration less than 30 seconds.
This device contains multiple transmitters that may operate simultaneously, and therefore requires a simultaneous transmission analysis according to FCC KDB Publication 447498 D01v06 4.3.2 procedures.

No.	Scenario	RF Exposure Condition	
		Next to Mouth	Extremity
1	2.4 ㎓ Bluetooth + WLAN 5 ㎓	Yes	
2	WLAN 2.4 ㎓ + 2.4 ㎓ Bluetooth	No	
3	WLAN 2.4 ㎓ + WLAN 5 ㎓ (RSDB Scenario)	No	

Notes:

- It does not transmit simultaneously the Bluetooth and 2.4 ㎓ WLAN.
- It is to use the Bluetooth and 2.4 ㎓ WLAN same antenna path.

2.6 SAR Test Methods and Procedures

The tests documented in this report were performed in accordance with IEEE 1528-2013 and the following published KDB procedures:

- IEEE 1528-2013
- 248227 D01 802.11 Wi-Fi SAR v02r02
- 447498 D01 General RF Exposure Guidance v06
- 865664 D01 SAR measurement 100 ㎒ to 6 ㎓ v01r04
- 865664 D02 RF Exposure Reporting v01r02
- April 2019 TCB Workshop Notes (Tissue Simulating Liquids)
- October 2016 TCB Workshop Notes (Bluetooth Duty Factor)

3. Specific Absorption Rate

3.1 Introduction

The SAR is related to the rate at which energy is absorbed per unit mass in an object exposed to a radio field. The SAR distribution in a biological body is complicated and is usually carried out by experimental techniques or numerical modeling. The standard recommends limits for two tiers of groups, occupational / controlled and general population/uncontrolled, based on a person's awareness and ability to exercise control over his or her exposure. In general, occupational/controlled exposure limits are higher than the limits for general population/uncontrolled.

3.2 SAR Definition

The SAR definition is the time derivative (rate) of the incremental energy (dW) absorbed by (dissipated in) an incremental mass (dm) contained in a volume element (dv) of a given density (ρ). The equation description is as below:

$$\mathbf{SAR} = \frac{\mathbf{d}}{\mathbf{dt}}\left(\frac{\mathbf{dW}}{\mathbf{dm}}\right) = \frac{\mathbf{d}}{\mathbf{dt}}\left(\frac{\mathbf{dW}}{\boldsymbol{\rho}\mathbf{dv}}\right)$$

SAR is expressed in units of Watts per kilogram (W/kg)
SAR measurement can be either related to the temperature elevation in tissue by

$$\mathbf{SAR} = \mathbf{C}\left(\frac{\boldsymbol{\delta}\mathbf{T}}{\boldsymbol{\delta}\mathbf{t}}\right)$$

Where: C is the specific head capacity, δT is the temperature rise and δt is the exposure duration, or related to the electrical field in the tissue by

$$\mathbf{SAR} = \frac{\boldsymbol{\sigma}|\mathbf{E}|^2}{\boldsymbol{\rho}}$$

Where: σ is the conductivity of the tissue, ρ is the mass density of the tissue and E is the RMS electrical field strength. However for evaluating SAR of low power transmitter, electrical field measurement is typically applied.

4. SAR Measurement Procedures

4.1 SAR Scan Procedures

Step 1: Power Reference Measurement
The Power Reference Measurement and Power Drift Measurements are for monitoring the power drift of the device under test in the batch process. The Minimum distance of probe sensors to surface determines the closest measurement point to phantom surface. The minimum distance of probe sensors to surface is 1.4 mm. This distance cannot be smaller than the Distance of sensor calibration points to probe tip as defined in the probe properties.
Step 2: Area Scan & Zoom Scan
The Area Scan is used as a fast scan in two dimensions to find the area of high field values, before doing a fine measurement around the hot spot and Zoom Scans are used to assess the peak spatial SAR values within a cubic averaging volume containing1 g and 10 g of simulated tissue. If only one Zoom Scan follows the Area Scan, then only the absolute maximum will be taken as reference. For cases where multiple maximums are detected, the number of Zoom Scans has to be increased accordingly. Area Scan & Zoom Scan Parameters extracted from KDB 865664 D01 SAR Measurement 100 MHz to 6 GHz v01r04.

			≤ 3 GHz	> 3 GHz
Maximum distance from closest measurement point (geometric center of probe sensors) to phantom surface			5 mm ± 1 mm	½·δ·ln(2) mm 0.5 mm
Maximum probe angle from probe axis to phantom surface normal at the measurement location			30° ± 1°	20° ± 1°
Maximum area scan spatial resolution: Δx_{Area}, Δy_{Area}			≤ 2 GHz: ≤ 15 mm 2 – 3 GHz: ≤ 12 mm	3 – 4 GHz: ≤ 12 mm 4 – 6 GHz: ≤ 10 mm
			When the x or y dimension of the test device, in the measurement plane orientation, is smaller than the above, the measurement resolution must be ≤ the corresponding x or y dimension of the test device with at least one measurement point on the test device.	
Maximum zoom scan spatial resolution: Δx_{Zoom}, Δy_{Zoom}			≤ 2 GHz: ≤ 8 mm 2 – 3 GHz: ≤ 5 mm*	3 – 4 GHz: ≤ 5 mm* 4 – 6 GHz: ≤ 4 mm*
Maximum zoom scan spatial resolution, normal to phantom surface	uniform grid: $\Delta z_{Zoom}(n)$		≤ 5 mm	3 – 4 GHz: ≤ 4 mm 4 – 5 GHz: ≤ 3 mm 5 – 6 GHz: ≤ 2 mm
	graded grid	$\Delta z_{Zoom}(1)$: between 1st two points closest to phantom surface	≤ 4 mm	3 – 4 GHz: ≤ 3 mm 4 – 5 GHz: ≤ 2.5 mm 5 – 6 GHz: ≤ 2 mm
		$\Delta z_{Zoom}(n>1)$: between subsequent points	≤ 1.5·$\Delta z_{Zoom}(n-1)$ mm	
Minimum zoom scan volume	x, y, z		≥ 30 mm	3 – 4 GHz: ≥ 28 mm 4 – 5 GHz: ≥ 25 mm 5 – 6 GHz: ≥ 22 mm
Note: δ is the penetration depth of a plane-wave at normal incidence to the tissue medium; see IEEE Std 1528-2013 for details. * When zoom scan is required and the reported SAR from the area scan based 1-g SAR estimation procedures of KDB Publication 447498 is ≤ 1.4 W/kg, ≤ 8 mm, ≤ 7 mm and ≤ 5 mm zoom scan resolution may be applied, respectively, for 2 GHz to 3 GHz, 3 GHz to 4 GHz and 4 GHz to 6 GHz.				

Step 3: Power drift measurement
The Power Drift Measurement measures the field at the same location as the most recent power reference measurement within the same procedure, and with the same settings. The Power Drift Measurement gives the field difference in dB from the reading conducted within the last Power Reference Measurement. This allows a user to monitor the power drift of the device under test within a batch process. The measurement procedure is the same as Step 1.

5. SAR Measurement Configurations

5.1 Watch-Device

Transmitters that are built-in within a wrist watch or similar wrist-worn devices typically operate in speaker mode for voice communication, with the device worn on the wrist and positioned next to mouth. Next to the mouth exposure requires 1g SAR, and the wrist-worn condition requires 10g extremity SAR. Next to the mouth use is evaluated with the front of the device positioned at 10 mm from a flat phantom filled with head tissue-equivalent medium. SAR for wrist exposure is evaluated with the back of the devices positioned in direct contact against a flat phantom fill with head tissue-equivalent medium.

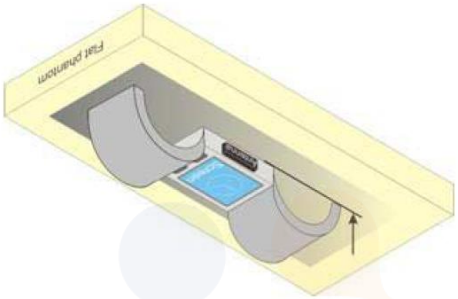

Figure 1
Test position for extremity

5.2 Device Holder

The device holder is made out of low-loss POM material having the following dielectric parameters: relative permittivity ε = 3 and loss tangent δ = 0.02

6. RF Exposure Limits

UNCONTROLLED ENVIRONMENTS are defined as locations where there is the exposure of individuals who have no knowledge or control of their exposure. The general population/uncontrolled exposure limits are applicable to situations in which the general public may be exposed or in which persons who are exposed as a consequence of their employment may not be made fully aware of the potential for exposure or cannot exercise control over their exposure. Members of the general public would come under this category when exposure is not employment-related; for example, in the case of a wireless transmitter that exposes persons in its vicinity.

CONTROLLED ENVIRONMENTS are defined as locations where there is exposure that may be incurred by persons who are aware of the potential for exposure, (i.e. as a result of employment or occupation). In general, occupational/controlled exposure limits are applicable to situations in which persons are exposed as a consequence of their employment, who have been made fully aware of the potential for exposure and can exercise control over their exposure. This exposure category is also applicable when the exposure is of a transient nature due to incidental passage through a location where the exposure levels may be higher than the general population/uncontrolled limits, but the exposed person is fully aware of the potential for exposure and can exercise control over his or her exposure by leaving the area or by some other appropriate means.

Human Exposure	Uncontrolled Environment General Population	Controlled Environment Occupational
Partial Peak SAR [1] (Partial)	1.60 mW/g	8.00 mW/g
Partial Average SAR [2] (Whole Body)	0.08 mW/g	0.40 mW/g
Partial Peak SAR [3] (Hands/Feet/Ankle/Wrist)	4.00 mW/g	20.00 mW/g

1) The spatial Peak value of the SAR averaged over any 1g gram of tissue (defined as a tissue volume in the shape of a cube) and over the appropriate averaging time.
2) The spatial Average value of the SAR averaged over the whole body.
3) The Spatial Peak value of the SAR averaged over any 10 grams of tissue (defined as a tissue volume in the shape of a cube) and over the appropriate averaging time.

7. FCC SAR General Measurement Procedures

7.1 Measured and Reported SAR

Per FCC KDB Publication 447498 D01v06, When SAR is not measured at the maximum power level allowed for production units, the results must be scaled to the maximum tune-up tolerance limit according to the power applied to the individual channels tested to determine compliance. For simultaneous transmission, the measured aggregate SAR must be scaled according to the sum of the differences between the maximum tune-up tolerance and actual power used to test each transmitter. When SAR is measured at or scaled to the maximum tune-up tolerance limit, the results are referred to as reported SAR. Test highest reported SAR results are identified on the grant of equipment authorization according to procedures in KDB 690783 D01v01r03.

7.2 SAR Testing with 802.11 Transmitters

The normal network operating configurations are not suitable for measuring the SAR of 802.11 a/b/g transmitters. Unpredictable fluctuations in network traffic and antenna diversity conditions can introduce undesirable variations in SAR results. The SAR for these devices should be measured using chipset based test mode software to ensure the results are consistent and reliable.

7.2.1 General Device Setup

Chipset based test mode software is hardware dependent and generally varies among manufacturers. The device operating parameters established in test mode for SAR measurements must be identical to those programmed in production units, including output power levels, amplifier gain settings and other RF performance tuning parameters. A periodic duty factor is required for current generation SAR systems to measure SAR. When 802.11 frame gaps are accounted for in the transmission, a maximum transmission duty factor of 92 – 96% is typically achievable in most test mode configurations. A minimum transmission duty factor of 85% is required to avoid certain hardware and device implementation issues related to wide range SAR scaling. The reported SAR is scaled to 100% transmission duty factor to determine compliance at the maximum tune-up tolerance limit.

7.2.2 U-NII-1 and U-NII-2A

For devices that operate in both U-NII-1 and U-NII-2A bands, when the same maximum output power is specified for both bands, SAR measurement using OFDM SAR test procedures is not required for U-NII-1 unless the highest reported SAR for U-NII-2A is > 1.2 W/kg. When different maximum output powers is not required unless the highest reported SAR for the U-NII band with the higher maximum output power, adjusted by the ratio of lower to higher specified maximum output power for the two bands, is > 1.2 W/kg. When 10g SAR measurement is considered, a factor of 2.5 is applied to the thresholds above.

7.2.3 U-NII-2C and U-NII-3

The frequency range covered by U-NII-2C and U-NII-3 is 380 ㎒ (5.47 – 5.85 ㎓), which requires a minimum of at least two SAR probe calibration frequency points to support SAR measurements. When Terminal Doppler Weather Radar (TDWR) restriction applies, the channels at 5.60 – 5.65 ㎓ in U-NII-2C band must be disabled with acceptable mechanisms and documented in the equipment certification. Unless band gap channels are permanently disabled, SAR must be considered for these channels. When band gap channels are disabled, each band is tested independently according to the normally required OFDM SAR measurement and probe calibration frequency point requirements.

7.2.4 Initial Test Position Procedure

For exposure conditions with multiple test positions, such as handset operating next to the ear, devices with hotspot mode or UMPC mini-tablet, procedures for initial test position can be applied. Using the transmission mode determined by the DSSS procedure or initial test configuration, area scans are measured for all positions in an exposure condition. The test position with the highest extrapolated (peak) SAR is used as the initial test position. When reported SAR for the initial test position is ≤ 0.4 W/kg, no additional testing for the remaining test positions is required. Otherwise, SAR is evaluated at the subsequent highest peak SAR positions until the reported SAR result is ≤ 0.8 W/kg or all test positions are measured.

7.2.5 2.4 ㎓ SAR Test Requirement

SAR is measured for 2.4 ㎓ 802.11b DSSS using either the fixed test position or, when applicable, the initial test position procedure. SAR test reduction is determined according to the following.

1) When the reported SAR of the highest measured maximum output power channel for the exposure configuration is ≤ 0.8 W/kg, no further SAR testing is required for 802.11b DSSS in that exposure configuration.
2) When the reported SAR is > 0.8 W/kg, SAR is required for that position using the next highest measured output power channel; i.e., all channels require testing.

2.4 ㎓ 802.11g/n OFDM are additionally evaluated for SAR if highest reported SAR for 802.11b, adjusted by the ratio of the OFDM to DSSS specified maximum output power, is > 1.2 W/kg. When SAR is required for OFDM modes in 2.4 ㎓ band, the Initial Test Configuration Procedures should be followed.

7.2.6 OFDM Transmission Mode and SAR Test Channel Selection

For the 2.4 ㎓ and 5 ㎓ band, when the same maximum output power was specified for multiple OFDM transmission mode configurations in a frequency band or aggregated band, SAR is measured using the configuration with the largest channel bandwidth, lowest order modulation and lowest data rate. When the maximum output power of a channel is the same for equivalent OFDM configurations; for example, 802.11a, 802.11n and 802.11ac or 802.11g and 802.11n with the same channel band width, modulation and data rate etc., the lower order 802.11 mode i.e., 802.11a, then 802.11n and 802.11ac or 802.11g then 802.11n, is used for SAR measurement. When maximum output power are the same for multiple test channels, either according to the default or additional power measurement requirements, SAR is measured using the channel closest to the middle of the frequency band or aggregated band. When there are multiple channels with the same maximum output power, SAR is measured using the higher number channel.

7.2.7 Initial Test Configuration Procedure

For OFDM, in both 2.4 and 5 ㎓ bands, an initial test configuration is determined for each frequency band and aggregated band, according to the transmission mode with the highest maximum output power specified for SAR measurements. When the same maximum output power is specified for multiple OFDM transmission mode configurations in a frequency band or aggregated band, SAR is measured using the configuration(s) with the largest channel bandwidth, lowest order modulation, and lowest data rate. If the average RF output powers of the highest identical transmission modes are within 0.25 ㏈ of each other, mid channel of the transmission mode with highest average RF output power is the initial test channel. Otherwise, the channel of the transmission mode with the highest average RF output conducted power will be the initial test configuration.

When the reported SAR is ≤ 0.8 W/kg, no additional measurements on other test channels are required. Otherwise, SAR is evaluated using the subsequent highest average RF output channel until the reported SAR result is ≤ 1.2 W/kg or all channels are measured. When there are multiple untested channels having the same subsequent highest average RF output power, the channel with higher frequency from the lowest 802.11 mode is considered for SAR measurements.

7.2.8 Subsequent Test Configuration Procedures

For OFDM configurations in each frequency band and aggregated band, SAR is evaluated for initial test configuration using the fixed test position or the initial test position procedure. When the highest reported SAR (for the initial test configuration), adjusted by the ratio of the specified maximum output power of the subsequent test configuration to initial test configuration, is ≤ 1.2 W/kg, no additional SAR tests for the subsequent test configurations are required. When 10g SAR measurement is considered, a factor of 2.5 is applied to the thresholds above.

8. RF Average Conducted Output Power

8.1 WLAN Average Conducted Output Power

Band	Freq. [MHz]	Channel	Mode		
			802.11b	802.11g	802.11n(HT20)
WLAN 2.4 GHz	2 412.0	1	17.30	15.95	16.23
	2 437.0	6	17.42	16.58	16.11
	2 462.0	11	**17.44**	16.75	16.65
	2 467.0	12	9.87	10.19	9.93
	2 472.0	13	8.55	8.76	8.15

Band	Freq. [MHz]	Channel	Mode	
			802.11a	802.11n(HT20)
NII	5 180.0	36	17.79	17.75
	5 200.0	40	17.84	17.81
	5 220.0	44	17.85	17.79
	5 240.0	48	17.87	17.85
	5 260.0	52	**17.89**	17.82
	5 280.0	56	17.83	17.85
	5 300.0	60	17.87	17.85
	5 320.0	64	17.87	17.87
	5 500.0	100	17.38	17.39
	5 600.0	120	**17.84**	17.89
	5 620.0	124	17.69	17.75
	5 720.0	144	17.08	17.11
	5 745.0	149	16.75	16.82
	5 785.0	157	**17.06**	17.09
	5 825.0	165	17.04	17.00

Justification for test configurations for WLAN per KDB Publication 248227 D01v02r02:

- Power measurements were performed for the transmission mode configuration with the highest maximum output power specified for production units.
- For transmission modes with the same maximum output power specification, powers were measured for the largest channel bandwidth, lowest order modulation and lowest data rate.
- For transmission modes with identical maximum specified output power, channel bandwidth, modulation and data rates, power measurements were required for all identical configurations.
- For each transmission mode configuration, powers were measured for the highest and lowest channels; and at the mid-band channel(s) when there were at least 3 channels supported. For configurations with multiple mid-band channels, due to an even number of channels, both channels were measured.

Power Measurement Setup

8.2 Bluetooth Average Conducted Output Power

Mode	Freq. [MHz]	Channel	Conducted Powers (dBm)
BDR_DH5 (1 Mbps)	2 402.0	0	16.20
	2 441.0	39	**16.58**
	2 480.0	78	16.37
BDR_2-DH5 (2 Mbps)	2 402.0	0	10.98
	2 441.0	39	11.07
	2 480.0	78	10.54
EDR_3-DH5 (3 Mbps)	2 402.0	0	11.22
	2 441.0	39	11.24
	2 480.0	78	10.65
LE (1 Mbps 37)	2 402.0	0	8.37
	2 440.0	19	8.17
	2 480.0	39	7.67
LE (1 Mbps 255)	2 402.0	0	8.42
	2 440.0	19	8.17
	2 480.0	39	7.67
LE (2 Mbps 37)	2 402.0	0	8.53
	2 440.0	19	8.32
	2 480.0	39	7.87
LE (2 Mbps 255)	2 402.0	0	8.47
	2 440.0	19	8.25
	2 480.0	39	7.79

8.3 Wireless Band Duty Cycle

Wireless Bands	Frequency Bands		Mode		Duty Cycle (%)	
WLAN	2.4 GHz		802.11b		98.48	
	NII		802.11a		91.85	
Bluetooth	**Mode**	**Packet**	**On Time (ms)**	**On-Off Time (ms)**	**Duty Cycle (%)**	**Duty Cycle Compensate Factor**
	BDR(GFSK)	DH5	2.88	3.75	76.80	1.302

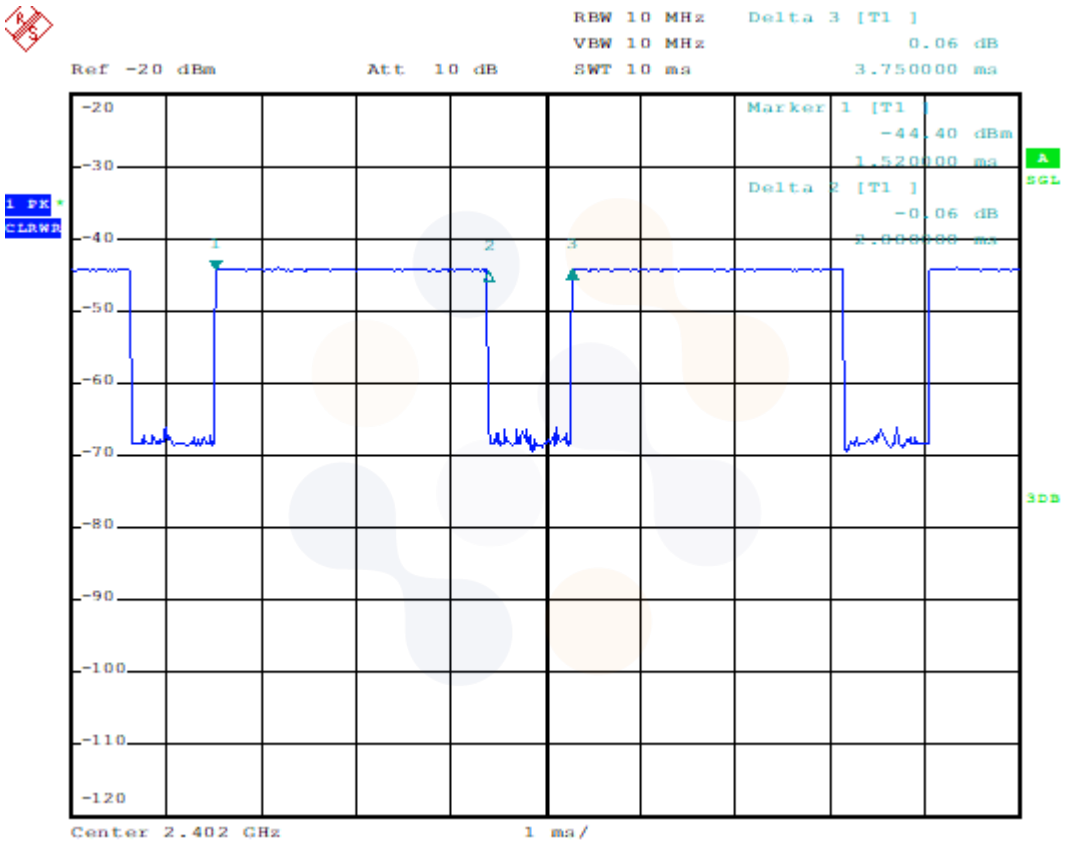

9. System Verification

9.1 Tissue Verification

The dielectric properties for this Tissue Simulant Liquids were measured by using the SPEAG Model DAK3.5 Dielectric Probe in conjunction with Agilent E5071B Network Analyzer (300 ㎑ – 8 500 ㎒). The Conductivity (σ) and Permittivity (ρ) are listed in Table 1.For the SAR measurement given in this report. The temperature variation of the Tissue Simulant Liquids was (22 ± 2) ℃.

Freq. (㎒)	Limit/Measured		Permittivity (ρ)	Conductivity (σ)	Temp. (°C)
2 450.0	Recommended Limit		39.20 ± 5 % (37.24~41.16)	1.80 ± 5 % (1.71~1.89)	22 ± 2
	Measured	2022-05-23	38.53	1.87	20.83
	Measured	2022-05-31	38.98	1.82	20.88
5 250.0	Recommended Limit		35.95 ± 5 % (34.15~37.75)	4.71 ± 5 % (4.47~4.95)	22 ± 2
	Measured	2022-05-19	35.45	4.77	20.71
	Measured	2022-05-30	36.33	4.57	20.57
5 600.0	Recommended Limit		35.50 ± 5 % (33.73~37.28)	5.07 ± 5 % (4.82~5.32)	22 ± 2
	Measured	2022-05-19	34.71	5.19	20.71
	Measured	2022-05-30	35.86	4.90	20.57
5 800.0	Recommended Limit		35.30 ± 5 % (33.54~37.07)	5.27 ± 5 % (5.01~5.53)	22 ± 2
	Measured	2022-05-20	35.01	5.42	20.39
	Measured	2022-05-30	35.52	5.10	20.57

<Table 1.Measurement result of Tissue electric parameters>

9.2 Test System Verification

The microwave circuit arrangement for system verification is sketched below picture.
The daily system accuracy verification occurs within the flat section of the SAM phantom. A SAR measurement was performed to see if the measured SAR was within ± 10% from the t arget SAR values. The tests were conducted on the same days as the measurement of the EUT. The obtained results from the system accuracy verification are displayed in the Table 2. During the tests, the ambient temperature of the laboratory was in the range (22 ± 2) ℃, th e relative humidity was in the range(50 ± 20)% and the liquid depth Above the ear/grid refer ence points was above 15 cm in all the cases. It is seen that the system is operating within its specification, as the results are within acceptable tolerance of the reference values.

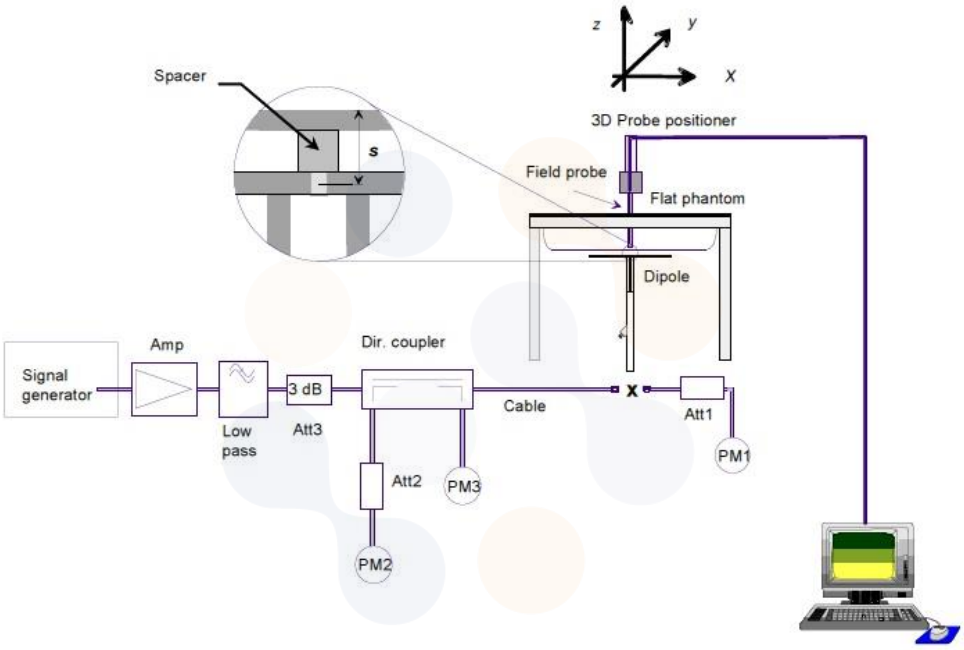

Verification Kit	Probe S/N	Frequency (㎒)	Tissue Type	Date	Limit/Measured (Normalized to 1 W)	
D2450V2 SN: 895	EX3DV4 SN: 3865	2 450.0	HSL	Measured	52.40 ± 10 % (47.16~57.64)	24.30 ± 10 % (21.87~26.73)
				2022-05-23	51.90	23.50
				2022-05-31	54.30	24.90
D5GHzV2 SN: 1134	EX3DV4 SN: 3865	5 250.0	HSL	Measured	81.40 ± 10 % (73.26~89.54)	23.20 ± 10 % (20.88~25.52)
				2022-05-19	77.50	22.70
				2022-05-30	78.70	22.90
D5GHzV2 SN: 1134	EX3DV4 SN: 3865	5 600.0	HSL	Measured	84.50 ± 10 % (76.05~92.95)	23.90 ± 10 % (21.51~26.29)
				2022-05-19	83.50	24.40
				2022-05-30	85.20	24.70
D5GHzV2 SN: 1134	EX3DV4 SN: 3865	5 800.0	HSL	Measured	82.60 ± 10 % (74.34~90.86)	23.10 ± 10 % (20.79~25.41)
				2022-05-20	80.00	23.40
				2022-05-30	80.70	23.40

<Table 2. System Verification>

10. SAR Test Results

WLAN 2.4 GHz										
Next to Mouth										
EUT Position	**Mode**	**Distance (mm)**	**Frequency (MHz)**	**Measured Conducted Power (dB m)**	**Max. Tune-up Power (dB m)**	**Power Scaling Factor**	**Duty Cycle Compensate Factor**	**Measured 1 g SAR (W/kg**	**Scaled 1g SAR (W/kg)**	**Plot No.**
Front	802.11b	10	2 462.0	17.44	18.00	1.138	1.015	0.161	**0.186**	1
Extremity										
EUT Position	**Mode**	**Distance (mm)**	**Frequency (MHz)**	**Measured Conducted Power (dB m)**	**Max. Tune-up Power (dB m)**	**Power Scaling Factor**	**Duty Cycle Compensate Factor**	**Measured 10 g SAR (W/kg**	**Scaled 10 g SAR (W/kg)**	**Plot No.**
Rear	802.11b	0	2 462.0	17.44	18.00	1.138	1.015	0.194	**0.224**	2

U-NII-2A										
Next to Mouth										
EUT Position	**Mode**	**Distance (mm)**	**Frequency (MHz)**	**Measured Conducted Power (dB m)**	**Max. Tune-up Power (dB m)**	**Power Scaling Factor**	**Duty Cycle Compensate Factor**	**Measured 1 g SAR (W/kg**	**Scaled 1g SAR (W/kg)**	**Plot No.**
Front	802.11a	10	5 260.0	17.89	18.00	1.026	1.089	0.006	**0.007**	3
Extremity										
EUT Position	**Mode**	**Distance (mm)**	**Frequency (MHz)**	**Measured Conducted Power (dB m)**	**Max. Tune-up Power (dB m)**	**Power Scaling Factor**	**Duty Cycle Compensate Factor**	**Measured 10 g SAR (W/kg**	**Scaled 10 g SAR (W/kg)**	**Plot No.**
Rear	802.11a	0	5 260.0	17.89	18.00	1.026	1.089	0.238	**0.266**	4

U-NII-2C										
Next to Mouth										
EUT Position	**Mode**	**Distance (mm)**	**Frequency (MHz)**	**Measured Conducted Power (dB m)**	**Max. Tune-up Power (dB m)**	**Power Scaling Factor**	**Duty Cycle Compensate Factor**	**Measured 1 g SAR (W/kg**	**Scaled 1g SAR (W/kg)**	**Plot No.**
Front	802.11a	10	5 600.0	17.84	18.00	1.038	1.089	0.008	**0.009**	5
Extremity										
EUT Position	**Mode**	**Distance (mm)**	**Frequency (MHz)**	**Measured Conducted Power (dB m)**	**Max. Tune-up Power (dB m)**	**Power Scaling Factor**	**Duty Cycle Compensate Factor**	**Measured 10 g SAR (W/kg**	**Scaled 10 g SAR (W/kg)**	**Plot No.**
Rear	802.11a	0	5 600.0	17.84	18.00	1.038	1.089	0.141	**0.159**	6

U-NII-3										
Next to Mouth										
EUT Position	**Mode**	**Distance (㎜)**	**Frequency (㎒)**	**Measured Conducted Power (dB m)**	**Max. Tune-up Power (dB m)**	**Power Scaling Factor**	**Duty Cycle Compensate Factor**	**Measured 1 g SAR (W/kg**	**Scaled 1g SAR (W/kg)**	**Plot No.**
Front	802.11a	10	5 785.0	17.06	18.00	1.242	1.089	0.005	**0.007**	7
Extremity										
EUT Position	**Mode**	**Distance (㎜)**	**Frequency (㎒)**	**Measured Conducted Power (dB m)**	**Max. Tune-up Power (dB m)**	**Power Scaling Factor**	**Duty Cycle Compensate Factor**	**Measured 10 g SAR (W/kg**	**Scaled 10 g SAR (W/kg)**	**Plot No.**
Rear	802.11a	0	5 785.0	17.06	18.00	1.242	1.089	0.028	**0.038**	8

Bluetooth										
Next to Mouth										
EUT Position	**Mode**	**Distance (㎜)**	**Frequency (㎒)**	**Measured Conducted Power (dB m)**	**Max. Tune-up Power (dB m)**	**Power Scaling Factor**	**Duty Cycle Compensate Factor**	**Measured 1 g SAR (W/kg**	**Scaled 1g SAR (W/kg)**	**Plot No.**
Front	DH5	10	2 441.0	16.58	18.00	1.387	1.302	0.124	**0.224**	9
Extremity										
EUT Position	**Mode**	**Distance (㎜)**	**Frequency (㎒)**	**Measured Conducted Power (dB m)**	**Max. Tune-up Power (dB m)**	**Power Scaling Factor**	**Duty Cycle Compensate Factor**	**Measured 10 g SAR (W/kg**	**Scaled 10 g SAR (W/kg)**	**Plot No.**
Rear	DH5	0	2 441.0	16.58	18.00	1.387	1.302	0.104	**0.188**	10

General Notes:

1. According to test procedures specified in IEEE1528-2013 and FCC KDB publication 447498 D01v06, the DUT was tested in all operating configurations, but only worst-case SAR values were reported
2. Only standard batteries were used for all tests and fully charged.
3. The depth of tissue-equivalent liquids in the phantom was at least 15cm.
4. The manufacturer guarantees that the tested devices have same physical, mechanical and thermal characteristics and meet the requirements for expected operational tolerances.
5. Measured SAR values were scaled up by applying the power scaling factor to comply FCC KDB publication 447498 D01v06
6. The EUT is tested 2nd hot-spot peak, if it is less than 2 dB below the highest peak.

WLAN & Bluetooth Notes:

1. Justification for test configurations for WLAN per KDB Publication 248227 D01v02r02 for 2.4㎓ WIFI operations, the highest measured maximum output power channel for DSSS was selected for SAR measurement. SAR for OFDM modes (2.4㎓ 802.11g/n) was not required due to the maximum allowed powers and the highest reported DSSS SAR.
2. The device was configured to transmit continuously at the required data rate, channel bandwidth and signal modulation, using the highest transmission duty factor supported by the test mode tools. The reported SAR was scaled to the 100% transmission duty factor to determine compliance.
3. When the same transmission mode configurations have the same maximum output power on the same channel for the 802.11 a/g/n/ac modes, the channel in the lower order/sequence 802.11 mode (i.e. a, g, n then ac) is selected.
4. When the highest reported SAR for the initial test configuration (when applicable, include subsequent highest output channels), according to the initial test position or fixed exposure requirements, is adjusted by the ratio of the subsequent test configuration to the initial test configuration specified maximum output power and the adjusted SAR is ≤ 1.2 W/Kg, SAR is not required for that subsequent test configuration.
5. WLAN & Bluetooth transmission was verified using a spectrum analyzer.

11. Simultaneous Transmission

The following procedures adopted from FCC KDB Publication 447498 D01v06 are applicable to devices with built in unlicensed transmitters such as 802.11 and Bluetooth devices which may simultaneously transmit with the licensed transmitter.
This device contains transmitters that may operate simultaneously. Therefore, simultaneous transmission analysis is required. Per FCC KDB Publication 447498 D01v06 4.3.2 and IEEE 1528-2013 Section 6.3.4.1.2, simultaneous transmission SAR test exclusion may be applied when the sum of the 1g or 10g SAR for all the simultaneous transmitting antennas in a specific a physical test configuration is within SAR limits. The different test positions in an exposure condition may be considered collectively to determine SAR test exclusion according to the sum of 1g or 10g SAR.

11.1 Simultaneous Transmission Analysis

Exposure Condition/ /Position		WLAN		Bluetooth	Summation
		2.4 GHz	5 GHz		
		[①]	[②]	[③]	[②+③]
Next to Mouth (1 g)	Front	0.186	0.009	0.224	**0.233**
Extremity (10 g)	Rear	0.224	0.266	0.188	**0.454**

Notes
- Simultaneous transmission SAR test exclusion considerations
  Simultaneous transmission SAR test exclusion is determined for each operating configuration and exposure condition according to the reported standalone SAR of each applicable simultaneously transmitting antenna. When the sum of 1-g or 10-g SAR of all simultaneously transmitting antennas in an operating mode and exposure condition combination is within the SAR limit, SAR test exclusion applies to that simultaneous transmission configuration. Per KDB Publication 447498 D01v06.
- When the sum of SAR1g or SAR10g of all simultaneously transmitting antennas in an operating mode and exposure condition combination is within the SAR limit (SAR1g 1.6 W/kg / SAR10g 4.0 W/kg), the SPLSR procedures is not required. When the sum of SAR1g or SAR10g is greater than the SAR limit (SAR1g 1.6 W/kg / SAR10g 4.0 W/kg), SAR test exclusion is determined by the SPLSR.

12. SAR Measurement Variability

Per FCC KDB Publication 865664 D01v01r04, SAR measurement variability was assessed for each frequency band, which was determined by the SAR probe calibration point and tissue-equivalent medium used for the device measurements. When both head and body tissue-equivalent media were required for SAR measurements in a frequency band, the variability measurement procedures were applied to the tissue medium with the highest measured SAR, using the highest measured SAR configuration for that tissue-equivalent medium. These additional measurements were repeated after the completion of all measurements requiring the same head or body tissue equivalent medium in a frequency band. The test device was returned to ambient conditions (normal room temperature) with the battery fully charged before it was re-mounted on the device holder for the repeated measurement(s) to minimize any unexpected variations in the repeated results.

SAR Measurement Variability was assessed using the following procedures for each frequency band:

1) **Repeated measurements are not required when the original highest measured SAR is < 0.80 W/㎏.**
2) When the original highest measured SAR is ≥ 0.80 W/kg, the measurement was repeated once.
3) A second repeated measurement was performed only if the ratio of largest to smallest SAR for the original and first repeated measurements was > 1.20 or when the original or repeated measurement was ≥ 1.45 W/kg (~ 10% from the 1-g SAR limit).
4) A third repeated measurement was performed only if the original, first or second repeated measurement was ≥ 1.5 W/kg and the ratio of largest to smallest SAR for the original, first and second repeated measurements is > 1.20.

Band	Mode	Frequency (㎒)	EUT Position	Separation Distance (㎜)	Measured 1 g/ 10g SAR (W/kg)	Measured 1 g/ 10g SAR (W/kg)	Ratio
N/A							

13. Measurement Uncertainty

Per KDB 865664 D01 SAR measurement 100㎒ to 6㎓, when the highest measured 1-g SAR within a frequency band is < 1.5 W/kg and the measured 10-g SAR within a frequency band is < 3.75 W/kg. The expanded SAR measurement uncertainty must be ≤ 30%, for a confidence interval of *k* = 2. If these conditions are met, extensive SAR measurement uncertainty analysis described in IEEE Standard 1528-2013 is not required in SAR reports submitted for equipment approval. For this device, the highest measured 1-g SAR is less 1.5W/kg and highest measured 10-g SAR is less 3.75W/kg. Therefore, the measurement uncertainty table is not required in this report.

14. Test Equipment Information

Test Platform	SPEAG DASY5 System			
Version	DASY52: 52.10.4.1535 / SEMCAD: 14.6.14 (7501)			
Location	KCTL Inc, 65, Sinwon-ro, Yeongtong-gu, Suwon-si, Gyeonggi-do, Korea			
Manufacture	SPEAG			
Hardware Reference				
Equipment	Model	Serial Number	Date of Calibration	Due date of next Calibration
Shield Room	-	8F - 1	-	-
DASY5 Robot	TX90XL speag	F07/554JA1/A/01	-	-
Phantom	2mm Oval Phantom ELI5	1173	-	-
Phantom	2mm Oval Phantom ELI5	1220	-	-
Mounting Device	Mounting Device	-	-	-
DAE	DAE4	666	2022-01-26	2023-01-26
Probe	EX3DV4	3865	2022-01-27	2023-01-27
ESG Vector Signal Generator	E4438C	MY42080486	2022-05-02	2023-05-02
Dual Power Meter	E4419B	GB43312301	2022-05-02	2023-05-02
Power Sensor	8481H	3318A 19379	2022-05-02	2023-05-02
Power Sensor	8481H	3318A 19377	2022-05-02	2023-05-02
Attenuator	8491B 3dB	17387	2022-05-02	2023-05-02
Attenuator	8491B-6dB	MY39270294	2022-05-02	2023-05-02
Attenuator	8491B 10dB	29425	2022-05-02	2023-05-02
Power Amplifier	2055-BBS3Q7E9I	1005D/C0521	2022-02-24	2023-02-24
Power Amplifier	5190FE	1012	2022-05-02	2023-05-02
Dual Directional Coupler	772D	2839A00719	2022-05-02	2023-05-02
Low Pass Filter	LA-30N	40058	2022-05-02	2023-05-02
Low Pass Filter	LA-60N	40059	2022-05-02	2023-05-02
Dipole Validation Kits	D2450V2	895	2020-07-21	2022-07-21
Dipole Validation Kits	D5GHzV2	1134	2022-01-27	2024-01-27
Network Analyzer	E5071B	MY42403524	2022-02-15	2023-02-15
Dielectric Assessment Kit	DAK-3.5	1046	2022-04-25	2023-04-25
Wideband Radio Communication Tester	CMW500	132120	2022-05-02	2023-05-02
Spectrum Analyzer	FSP7	100289	2021-12-21	2022-12-21
Humidity/Temp	MHB-382SD	73871	2022-05-04	2023-05-04

15. Test System Verification Results

Date: 2022-05-23

Test Laboratory: KCTL Inc.
File Name: 2450 MHz Verification Input Power 100 mW 2022-05-23.da5:0

DUT: Dipole 2450 MHz D2450V2, Type: D2450V2, Serial: D2450V2 - SN:895

Communication System: UID 0, CW (0); Frequency: 2450 MHz; Duty Cycle: 1:1
Medium parameters used (interpolated): f = 2450 MHz; σ = 1.865 S/m; ε_r = 38.526; ρ = 1000 kg/m^3
Phantom section: Flat Section

DASY5 Configuration:

- Probe: EX3DV4 - SN3865;ConvF(7.82, 7.82, 7.82) @ 2450 MHz; Calibrated: 2022-01-27
- Sensor-Surface: 1.4mm (Mechanical Surface Detection)
- Electronics: DAE4 Sn666; Calibrated: 2022-01-26
- Phantom: ELI V5.0 -3; Type: QD OVA 002 AA; Serial: 1173
- Measurement SW: DASY52, Version 52.10 (4);

Configuration/2450 MHz Verification Input Power 100 mW 2022-05-23/Area Scan (10x11x1):
Measurement grid: dx=12mm, dy=12mm

Info: Interpolated medium parameters used for SAR evaluation.
Maximum value of SAR (measured) = 6.74 W/kg

Configuration/2450 MHz Verification Input Power 100 mW 2022-05-23/Zoom Scan (7x7x7)/Cube 0:
Measurement grid: dx=5mm, dy=5mm, dz=5mm
Reference Value = 71.28 V/m; Power Drift = -0.00 dB
Peak SAR (extrapolated) = 11.4 W/kg
SAR(1 g) = 5.19 W/kg; SAR(10 g) = 2.35 W/kg

Info: Interpolated medium parameters used for SAR evaluation.
Maximum value of SAR (measured) = 8.99 W/kg

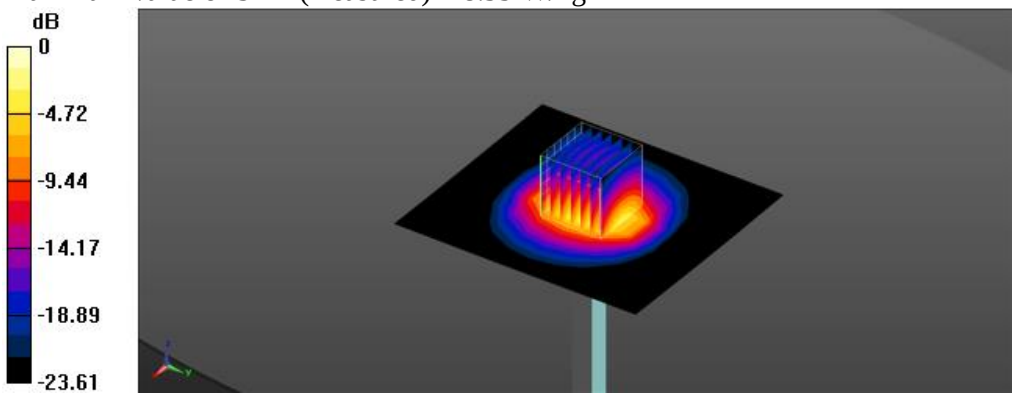

0 dB = 8.99 W/kg = 9.54 dBW/kg

Date: 2022-05-31

Test Laboratory: KCTL Inc.
File Name: 2450 MHz Verification Input Power 100 mW 2022-05-31.da5:0

DUT: Dipole 2450 MHz D2450V2, Type: D2450V2, Serial: D2450V2 - SN:895

Communication System: UID 0, CW (0); Frequency: 2450 MHz; Duty Cycle: 1:1
Medium parameters used (interpolated): f = 2450 MHz; σ = 1.822 S/m; ε_r = 38.981; ρ = 1000 kg/m^3
Phantom section: Flat Section

DASY5 Configuration:

- Probe: EX3DV4 - SN3865;ConvF(7.82, 7.82, 7.82) @ 2450 MHz; Calibrated: 2022-01-27
- Sensor-Surface: 1.4mm (Mechanical Surface Detection)
- Electronics: DAE4 Sn666; Calibrated: 2022-01-26
- Phantom: ELI V5.0 -3; Type: QD OVA 002 AA; Serial: 1173
- Measurement SW: DASY52, Version 52.10 (4);

Configuration/2450 MHz Verification Input Power 100 mW 2022-05-31/Area Scan (10x11x1):
Measurement grid: dx=12mm, dy=12mm

Info: Interpolated medium parameters used for SAR evaluation.
Maximum value of SAR (measured) = 7.56 W/kg

Configuration/2450 MHz Verification Input Power 100 mW 2022-05-31/Zoom Scan (7x7x7)/Cube 0:
Measurement grid: dx=5mm, dy=5mm, dz=5mm
Reference Value = 72.70 V/m; Power Drift = 0.11 dB
Peak SAR (extrapolated) = 11.7 W/kg
SAR(1 g) = 5.43 W/kg; SAR(10 g) = 2.49 W/kg

Info: Interpolated medium parameters used for SAR evaluation.
Maximum value of SAR (measured) = 9.29 W/kg

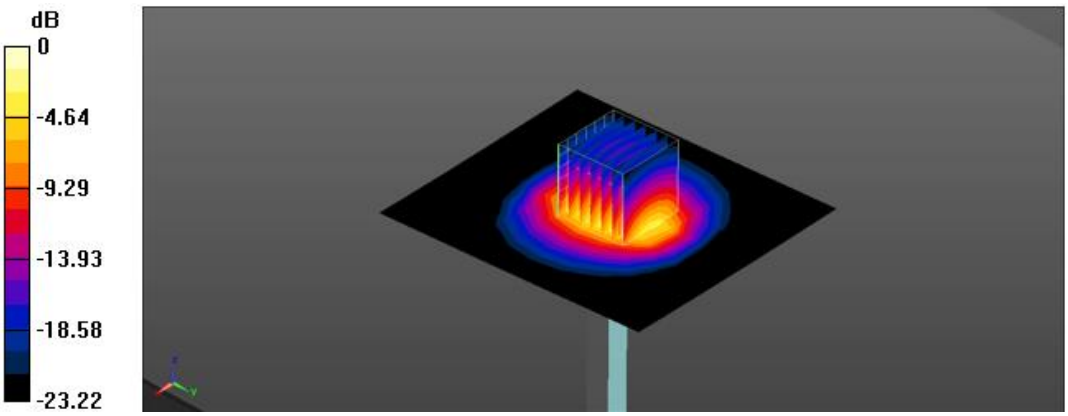

0 dB = 9.29 W/kg = 9.68 dBW/kg

Date: 2022-05-19

Test Laboratory: KCTL Inc.
File Name: 5250 MHz Verification Input Power 100 mW 2022-05-19.da5:0

DUT: Dipole D5GHzV2, Type: D5GHzV2, Serial: D5GHzV2 - SN:1134

Communication System: UID 0, CW (0); Frequency: 5250 MHz; Duty Cycle: 1:1
Medium parameters used (interpolated): f = 5250 MHz; σ = 4.773 S/m; ε_r = 35.445; ρ = 1000 kg/m^3
Phantom section: Flat Section

DASY5 Configuration:

- Probe: EX3DV4 - SN3865;ConvF(5.57, 5.57, 5.57) @ 5250 MHz; Calibrated: 2022-01-27
- Sensor-Surface: 1.4mm (Mechanical Surface Detection)
- Electronics: DAE4 Sn666; Calibrated: 2022-01-26
- Phantom: ELI V5.0 -2; Type: QD OVA 002 BB; Serial: 1220
- Measurement SW: DASY52, Version 52.10 (4);

Configuration/5250 MHz Verification Input Power 100 mW 2022-05-19/Area Scan (10x13x1):
Measurement grid: dx=10mm, dy=10mm

Info: Interpolated medium parameters used for SAR evaluation.
Maximum value of SAR (measured) = 14.8 W/kg

Configuration/5250 MHz Verification Input Power 100 mW 2022-05-19/Zoom Scan (8x8x7)/Cube 0:
Measurement grid: dx=4mm, dy=4mm, dz=1.4mm
Reference Value = 67.64 V/m; Power Drift = 0.19 dB
Peak SAR (extrapolated) = 30.2 W/kg
SAR(1 g) = 7.75 W/kg; SAR(10 g) = 2.27 W/kg

Info: Interpolated medium parameters used for SAR evaluation.
Maximum value of SAR (measured) = 19.1 W/kg

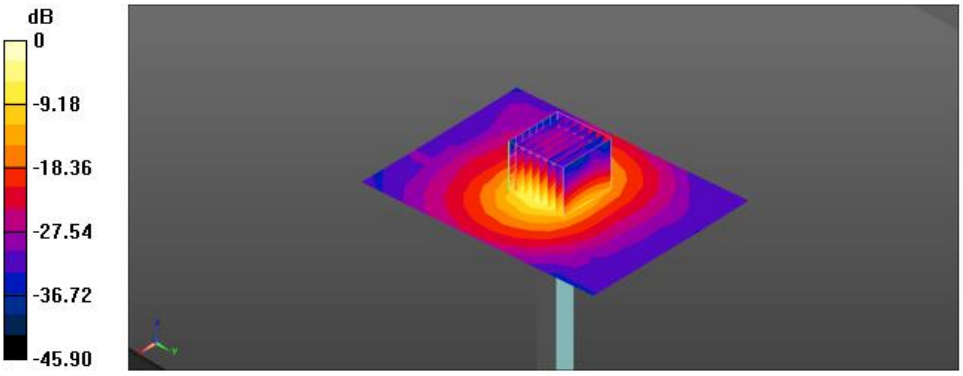

0 dB = 19.1 W/kg = 12.81 dBW/kg

Date: 2022-05-30

Test Laboratory: KCTL Inc.
File Name: 5250 MHz Verification Input Power 100 mW 2022-05-30.da5:0

DUT: Dipole D5GHzV2, Type: D5GHzV2, Serial: D5GHzV2 - SN:1134

Communication System: UID 0, CW (0); Frequency: 5250 MHz; Duty Cycle: 1:1
Medium parameters used (interpolated): f = 5250 MHz; σ = 4.571 S/m; ε_r = 36.331; ρ = 1000 kg/m^3
Phantom section: Flat Section

DASY5 Configuration:

- Probe: EX3DV4 - SN3865;ConvF(5.57, 5.57, 5.57) @ 5250 MHz; Calibrated: 2022-01-27
- Sensor-Surface: 1.4mm (Mechanical Surface Detection)
- Electronics: DAE4 Sn666; Calibrated: 2022-01-26
- Phantom: ELI V5.0 -2; Type: QD OVA 002 BB; Serial: 1220
- Measurement SW: DASY52, Version 52.10 (4);

Configuration/5250 MHz Verification Input Power 100 mW 2022-05-30/Area Scan (10x13x1):
Measurement grid: dx=10mm, dy=10mm

Info: Interpolated medium parameters used for SAR evaluation.
Maximum value of SAR (measured) = 17.3 W/kg

Configuration/5250 MHz Verification Input Power 100 mW 2022-05-30/Zoom Scan (8x8x7)/Cube 0:
Measurement grid: dx=4mm, dy=4mm, dz=1.4mm
Reference Value = 67.63 V/m; Power Drift = 0.16 dB
Peak SAR (extrapolated) = 31.1 W/kg
SAR(1 g) = 7.87 W/kg; SAR(10 g) = 2.29 W/kg

Info: Interpolated medium parameters used for SAR evaluation.
Maximum value of SAR (measured) = 19.7 W/kg

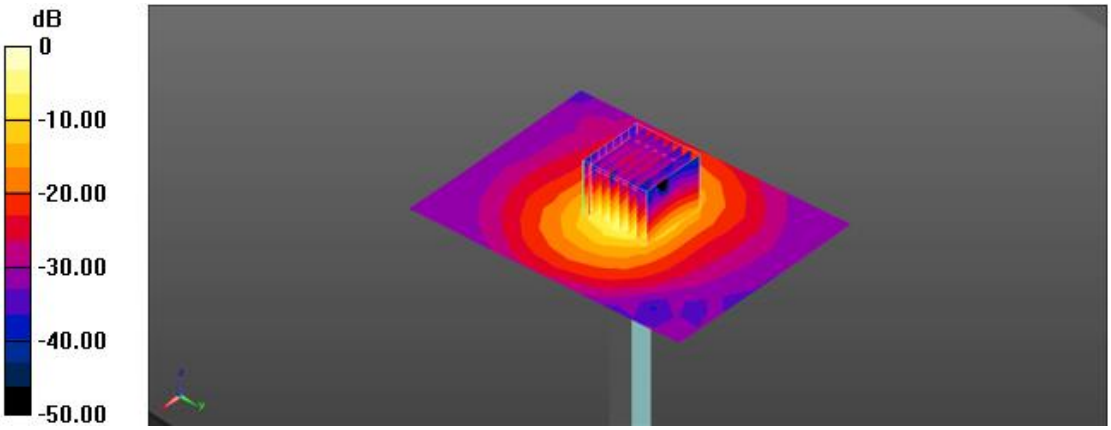

0 dB = 19.7 W/kg = 12.94 dBW/kg

Date: 2022-05-19

Test Laboratory: KCTL Inc.
File Name: 5600 MHz Verification Input Power 100 mW 2022-05-19.da5:0

DUT: Dipole D5GHzV2, Type: D5GHzV2, Serial: D5GHzV2 - SN:1134

Communication System: UID 0, CW (0); Frequency: 5600 MHz; Duty Cycle: 1:1
Medium parameters used: f = 5600 MHz; σ = 5.193 S/m; ε_r = 34.713; ρ = 1000 kg/m^3
Phantom section: Flat Section

DASY5 Configuration:

- Probe: EX3DV4 - SN3865;ConvF(5.03, 5.03, 5.03) @ 5600 MHz; Calibrated: 2022-01-27
- Sensor-Surface: 1.4mm (Mechanical Surface Detection)
- Electronics: DAE4 Sn666; Calibrated: 2022-01-26
- Phantom: ELI V5.0 -2; Type: QD OVA 002 BB; Serial: 1220
- Measurement SW: DASY52, Version 52.10 (4);

Configuration/5600 MHz Verification Input Power 100 mW 2022-05-19/Area Scan (10x13x1):
Measurement grid: dx=10mm, dy=10mm
Maximum value of SAR (measured) = 17.1 W/kg

Configuration/5600 MHz Verification Input Power 100 mW 2022-05-19/Zoom Scan (8x8x7)/Cube 0:
Measurement grid: dx=4mm, dy=4mm, dz=1.4mm
Reference Value = 68.00 V/m; Power Drift = 0.10 dB
Peak SAR (extrapolated) = 32.8 W/kg
SAR(1 g) = 8.35 W/kg; SAR(10 g) = 2.44 W/kg
Maximum value of SAR (measured) = 20.8 W/kg

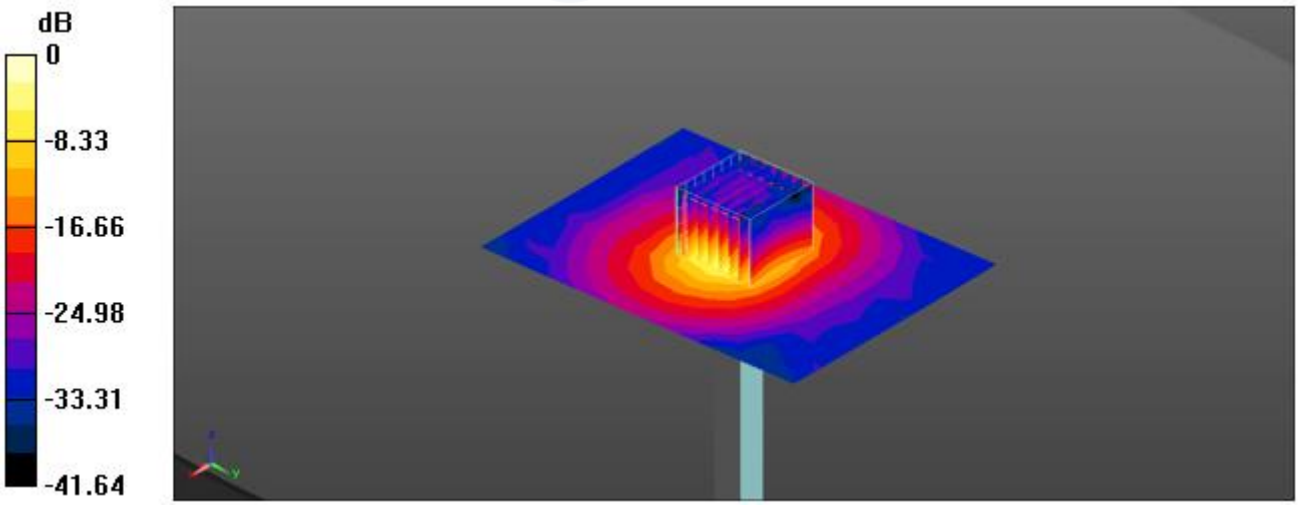

0 dB = 20.8 W/kg = 13.18 dBW/kg

Date: 2022-05-30

Test Laboratory: KCTL Inc.
File Name: 5600 MHz Verification Input Power 100 mW 2022-05-30.da5:0

DUT: Dipole D5GHzV2, Type: D5GHzV2, Serial: D5GHzV2 - SN:1134

Communication System: UID 0, CW (0); Frequency: 5600 MHz; Duty Cycle: 1:1
Medium parameters used: f = 5600 MHz; σ = 4.897 S/m; ε_r = 35.858; ρ = 1000 kg/m^3
Phantom section: Flat Section

DASY5 Configuration:

- Probe: EX3DV4 - SN3865;ConvF(5.03, 5.03, 5.03) @ 5600 MHz; Calibrated: 2022-01-27
- Sensor-Surface: 1.4mm (Mechanical Surface Detection)
- Electronics: DAE4 Sn666; Calibrated: 2022-01-26
- Phantom: ELI V5.0 -2; Type: QD OVA 002 BB; Serial: 1220
- Measurement SW: DASY52, Version 52.10 (4);

Configuration/5600 MHz Verification Input Power 100 mW 2022-05-30/Area Scan (10x13x1):
Measurement grid: dx=10mm, dy=10mm
Maximum value of SAR (measured) = 20.6 W/kg

Configuration/5600 MHz Verification Input Power 100 mW 2022-05-30/Zoom Scan (8x8x7)/Cube 0:
Measurement grid: dx=4mm, dy=4mm, dz=1.4mm
Reference Value = 67.67 V/m; Power Drift = 0.15 dB
Peak SAR (extrapolated) = 34.1 W/kg
SAR(1 g) = 8.52 W/kg; SAR(10 g) = 2.47 W/kg
Maximum value of SAR (measured) = 21.4 W/kg

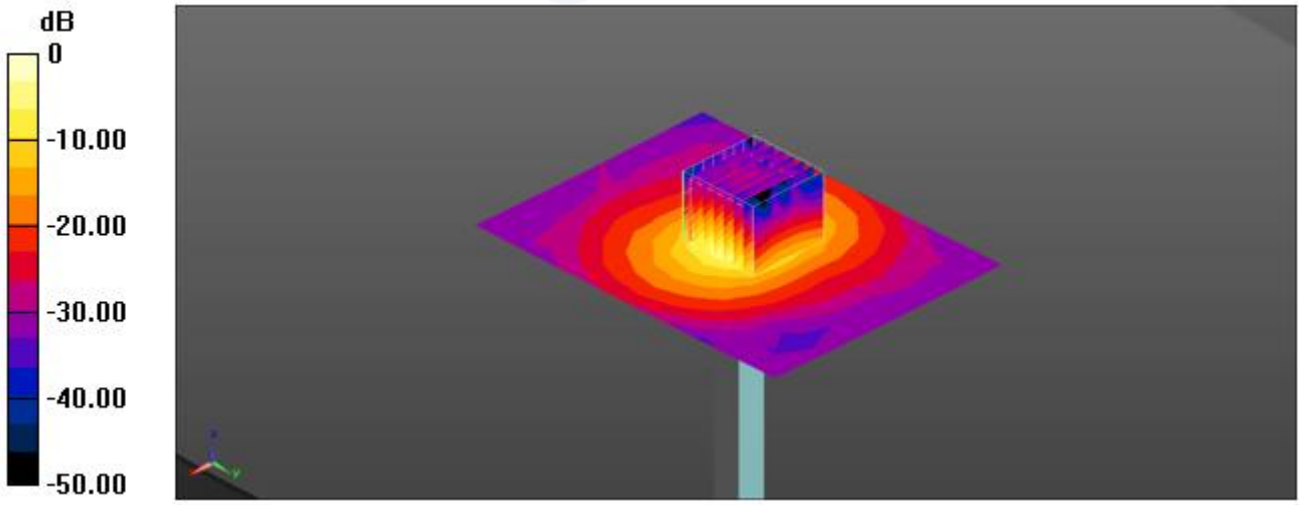

0 dB = 21.4 W/kg = 13.30 dBW/kg

Date: 2022-05-20

Test Laboratory: KCTL Inc.
File Name: 5800 MHz Verification Input Power 100 mW 2022-05-20.da5:0

DUT: Dipole D5GHzV2, Type: D5GHzV2, Serial: D5GHzV2 - SN:1134

Communication System: UID 0, CW (0); Frequency: 5800 MHz; Duty Cycle: 1:1
Medium parameters used: f = 5800 MHz; σ = 5.418 S/m; ε_r = 35.01; ρ = 1000 kg/m^3
Phantom section: Flat Section

DASY5 Configuration:

- Probe: EX3DV4 - SN3865;ConvF(5.03, 5.03, 5.03) @ 5800 MHz; Calibrated: 2022-01-27
- Sensor-Surface: 1.4mm (Mechanical Surface Detection)
- Electronics: DAE4 Sn666; Calibrated: 2022-01-26
- Phantom: ELI V5.0 -2; Type: QD OVA 002 BB; Serial: 1220
- Measurement SW: DASY52, Version 52.10 (4);

Configuration/5800 MHz Verification Input Power 100 mW 2022-05-20/Area Scan (10x13x1):
Measurement grid: dx=10mm, dy=10mm
Maximum value of SAR (measured) = 16.0 W/kg

Configuration/5800 MHz Verification Input Power 100 mW 2022-05-20/Zoom Scan (8x8x7)/Cube 0:
Measurement grid: dx=4mm, dy=4mm, dz=1.4mm
Reference Value = 64.50 V/m; Power Drift = 0.15 dB
Peak SAR (extrapolated) = 31.6 W/kg
SAR(1 g) = 8 W/kg; SAR(10 g) = 2.34 W/kg
Maximum value of SAR (measured) = 19.9 W/kg

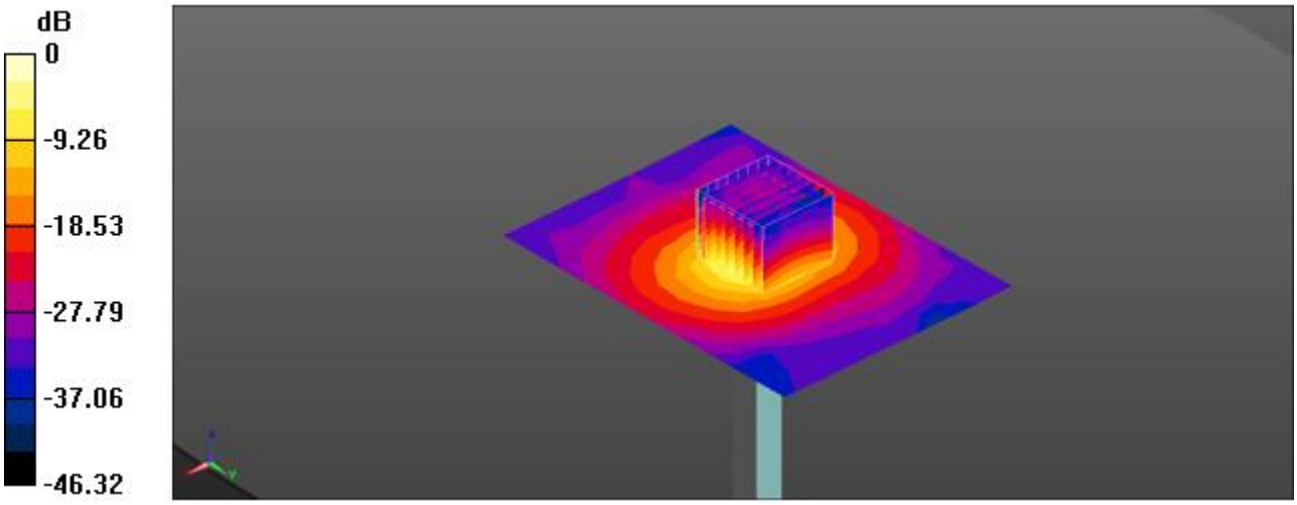

0 dB = 19.9 W/kg = 12.99 dBW/kg

Date: 2022-05-30

Test Laboratory: KCTL Inc.
File Name: 5800 MHz Verification Input Power 100 mW 2022-05-30.da5:0

DUT: Dipole D5GHzV2, Type: D5GHzV2, Serial: D5GHzV2 - SN:1134

Communication System: UID 0, CW (0); Frequency: 5800 MHz; Duty Cycle: 1:1
Medium parameters used: f = 5800 MHz; σ = 5.101 S/m; ε_r = 35.524; ρ = 1000 kg/m^3
Phantom section: Flat Section

DASY5 Configuration:

- Probe: EX3DV4 - SN3865;ConvF(5.03, 5.03, 5.03) @ 5800 MHz; Calibrated: 2022-01-27
- Sensor-Surface: 1.4mm (Mechanical Surface Detection)
- Electronics: DAE4 Sn666; Calibrated: 2022-01-26
- Phantom: ELI V5.0 -2; Type: QD OVA 002 BB; Serial: 1220
- Measurement SW: DASY52, Version 52.10 (4);

Configuration/5800 MHz Verification Input Power 100 mW 2022-05-30/Area Scan (10x13x1):
Measurement grid: dx=10mm, dy=10mm
Maximum value of SAR (measured) = 19.0 W/kg

Configuration/5800 MHz Verification Input Power 100 mW 2022-05-30/Zoom Scan (8x8x7)/Cube 0:
Measurement grid: dx=4mm, dy=4mm, dz=1.4mm
Reference Value = 64.32 V/m; Power Drift = 0.18 dB
Peak SAR (extrapolated) = 31.8 W/kg
SAR(1 g) = 8.07 W/kg; SAR(10 g) = 2.34 W/kg
Maximum value of SAR (measured) = 20.0 W/kg

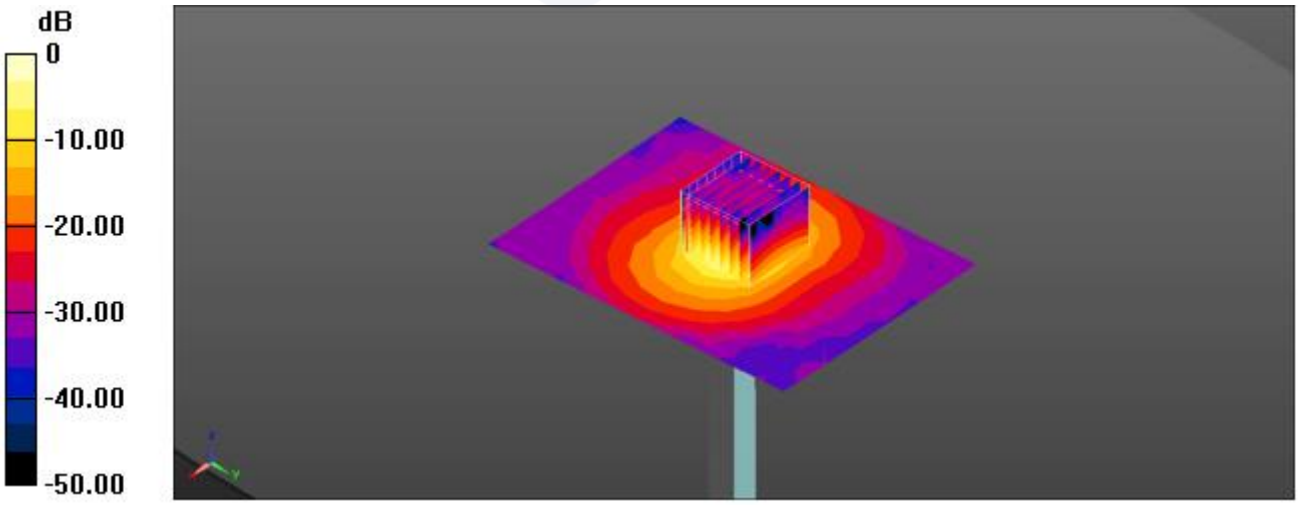

0 dB = 20.0 W/kg = 13.01 dBW/kg

16. Test Results

1)

Date: 2022-05-23

Test Laboratory: KCTL Inc.
File Name: 1. 2.4 GHz_802.11 b.da53:0

DUT: SM-R920, Type: Watch, Serial: R3AT400D4AT

Communication System: UID 0, 2.4GWLAN (0); Frequency: 2462 MHz; Duty Cycle: 1:1
Medium parameters used: f = 2462 MHz; σ = 1.878 S/m; ε_r = 38.477; ρ = 1000 kg/m^3
Phantom section: Flat Section

DASY5 Configuration:

- Probe: EX3DV4 - SN3865;ConvF(7.82, 7.82, 7.82) @ 2462 MHz; Calibrated: 2022-01-27
- Sensor-Surface: 1.4mm (Mechanical Surface Detection)
- Electronics: DAE4 Sn666; Calibrated: 2022-01-26
- Phantom: ELI V5.0 -3; Type: QD OVA 002 AA; Serial: 1173
- Measurement SW: DASY52, Version 52.10 (4);

Configuration/802.11 b_CH11_Front_10 mm/Area Scan (10x10x1): Measurement grid: dx=12mm, dy=12mm
Maximum value of SAR (measured) = 0.240 W/kg

Configuration/802.11 b_CH11_Front_10 mm/Zoom Scan (7x7x7)/Cube 0: Measurement grid: dx=5mm, dy=5mm, dz=5mm
Reference Value = 11.10 V/m; Power Drift = 0.05 dB
Peak SAR (extrapolated) = 0.292 W/kg
SAR(1 g) = 0.161 W/kg; SAR(10 g) = 0.081 W/kg
Maximum value of SAR (measured) = 0.244 W/kg

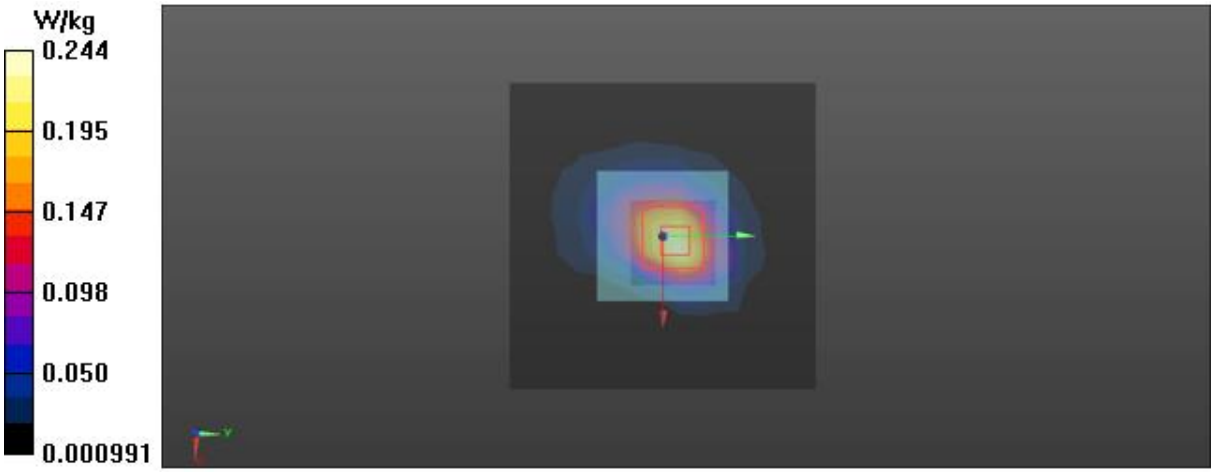

2)

Date: 2022-05-23

Test Laboratory: KCTL Inc.
File Name: 1. 2.4 GHz_802.11 b.da53:1

DUT: SM-R920, Type: Watch, Serial: R3AT400D21Y

Communication System: UID 0, 2.4GWLAN (0); Frequency: 2462 MHz; Duty Cycle: 1:1
Medium parameters used: f = 2462 MHz; σ = 1.878 S/m; ε_r = 38.477; ρ = 1000 kg/m^3
Phantom section: Flat Section

DASY5 Configuration:

- Probe: EX3DV4 - SN3865;ConvF(7.82, 7.82, 7.82) @ 2462 MHz; Calibrated: 2022-01-27
- Sensor-Surface: 1.4mm (Mechanical Surface Detection)
- Electronics: DAE4 Sn666; Calibrated: 2022-01-26
- Phantom: ELI V5.0 -3; Type: QD OVA 002 AA; Serial: 1173
- Measurement SW: DASY52, Version 52.10 (4);

Configuration 2/802.11 b_CH11_Rear_0 mm/Area Scan (10x10x1): Measurement grid: dx=12mm, dy=12mm
Maximum value of SAR (measured) = 0.664 W/kg

Configuration 2/802.11 b_CH11_Rear_0 mm/Zoom Scan (7x7x8)/Cube 0: Measurement grid: dx=5mm, dy=5mm, dz=1.4mm
Reference Value = 17.90 V/m; Power Drift = -0.04 dB
Peak SAR (extrapolated) = 1.86 W/kg
SAR(1 g) = 0.476 W/kg; SAR(10 g) = 0.194 W/kg
Maximum value of SAR (measured) = 1.09 W/kg

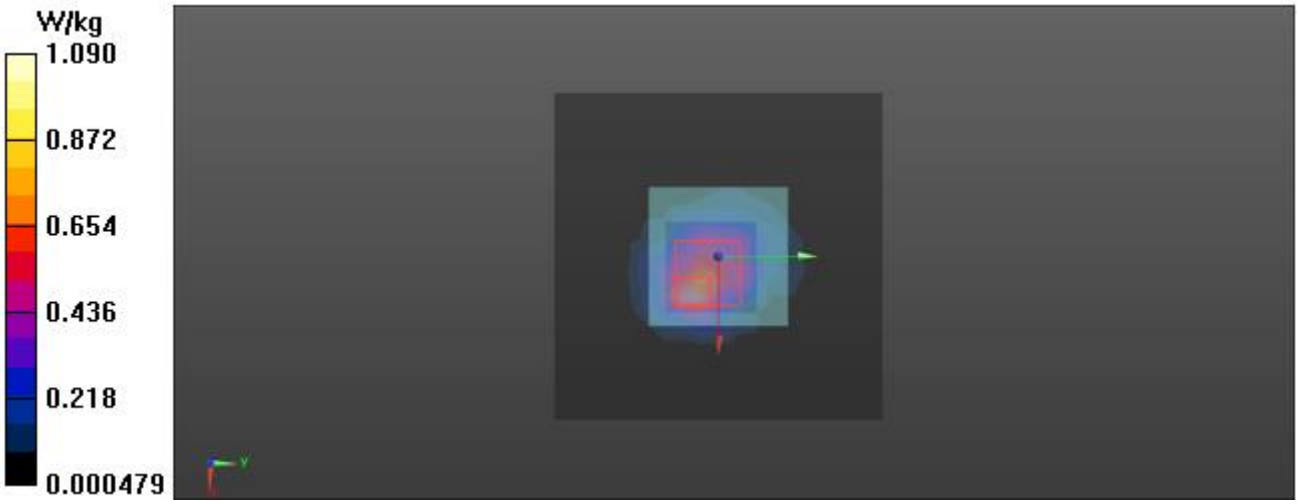

3)

Date: 2022-05-19

Test Laboratory: KCTL Inc.
File Name: 1. 5.3 GHz_802.11 a.da53:0

DUT: SM-R920, Type: Watch, Serial: R3AT400D4AT

Communication System: UID 0, 5GWLAN (0); Frequency: 5260 MHz; Duty Cycle: 1:1
Medium parameters used: f = 5260 MHz; σ = 4.784 S/m; ε_r = 35.422; ρ = 1000 kg/m^3
Phantom section: Flat Section

DASY5 Configuration:

- Probe: EX3DV4 - SN3865;ConvF(5.57, 5.57, 5.57) @ 5260 MHz; Calibrated: 2022-01-27
- Sensor-Surface: 1.4mm (Mechanical Surface Detection)
- Electronics: DAE4 Sn666; Calibrated: 2022-01-26
- Phantom: ELI V5.0 -2; Type: QD OVA 002 BB; Serial: 1220
- Measurement SW: DASY52, Version 52.10 (4);

Configuration/802.11 a_CH52_Front_10 mm/Area Scan (11x11x1): Measurement grid: dx=10mm, dy=10mm
Maximum value of SAR (measured) = 0.0185 W/kg

Configuration/802.11 a_CH52_Front_10 mm/Zoom Scan (9x9x7)/Cube 0: Measurement grid: dx=4mm, dy=4mm, dz=1.4mm
Reference Value = 1.165 V/m; Power Drift = -0.13 dB
Peak SAR (extrapolated) = 0.0830 W/kg
SAR(1 g) = 0.00569 W/kg; SAR(10 g) = 0.00156 W/kg
Maximum value of SAR (measured) = 0.0220 W/kg

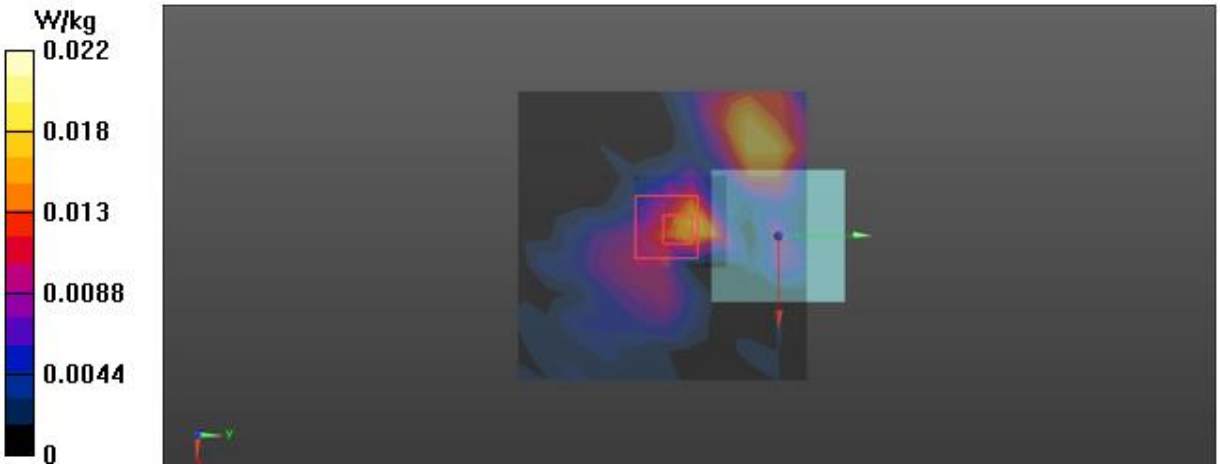

4)

Date: 2022-05-30

Test Laboratory: KCTL Inc.
File Name: 1. 5.3 GHz_802.11 a.da53:0

DUT: SM-R920, Type: Watch, Serial: R3AT400DYKB

Communication System: UID 0, 5GWLAN (0); Frequency: 5260 MHz; Duty Cycle: 1:1
Medium parameters used: f = 5260 MHz; σ = 4.58 S/m; ε_r = 36.319; ρ = 1000 kg/m^3
Phantom section: Flat Section

DASY5 Configuration:

- Probe: EX3DV4 - SN3865;ConvF(5.57, 5.57, 5.57) @ 5260 MHz; Calibrated: 2022-01-27
- Sensor-Surface: 1.4mm (Mechanical Surface Detection)
- Electronics: DAE4 Sn666; Calibrated: 2022-01-26
- Phantom: ELI V5.0 -2; Type: QD OVA 002 BB; Serial: 1220
- Measurement SW: DASY52, Version 52.10 (4);

Configuration 2/802.11 a_CH52_Rear_0 mm/Area Scan (11x11x1): Measurement grid: dx=10mm, dy=10mm
Maximum value of SAR (measured) = 1.14 W/kg

Configuration 2/802.11 a_CH52_Rear_0 mm/Zoom Scan (11x11x7)/Cube 0: Measurement grid: dx=3mm, dy=3mm, dz=1.4mm
Reference Value = 17.93 V/m; Power Drift = -0.19 dB
Peak SAR (extrapolated) = 5.05 W/kg
SAR(1 g) = 0.769 W/kg; SAR(10 g) = 0.238 W/kg
Maximum value of SAR (measured) = 2.54 W/kg

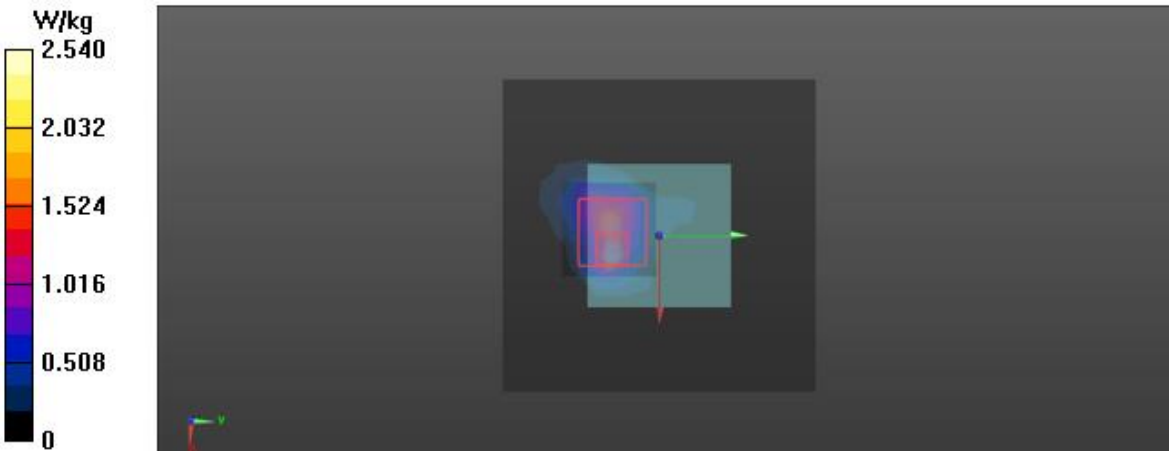

5)

Date: 2022-05-19

Test Laboratory: KCTL Inc.
File Name: 1. 5.6 GHz_802.11 a.da53:0

DUT: SM-R920, Type: Watch, Serial: R3AT400D4AT

Communication System: UID 0, 5GWLAN (0); Frequency: 5600 MHz; Duty Cycle: 1:1
Medium parameters used: f = 5600 MHz; σ = 5.193 S/m; ε_r = 34.713; ρ = 1000 kg/m^3
Phantom section: Flat Section

DASY5 Configuration:

- Probe: EX3DV4 - SN3865;ConvF(5.03, 5.03, 5.03) @ 5600 MHz; Calibrated: 2022-01-27
- Sensor-Surface: 1.4mm (Mechanical Surface Detection)
- Electronics: DAE4 Sn666; Calibrated: 2022-01-26
- Phantom: ELI V5.0 -2; Type: QD OVA 002 BB; Serial: 1220
- Measurement SW: DASY52, Version 52.10 (4);

Configuration/802.11 a_CH120_Front_10 mm/Area Scan (11x11x1): Measurement grid: dx=10mm, dy=10mm
Maximum value of SAR (measured) = 0.0228 W/kg

Configuration/802.11 a_CH120_Front_10 mm/Zoom Scan (9x9x7)/Cube 0: Measurement grid: dx=4mm, dy=4mm, dz=1.4mm
Reference Value = 0 V/m; Power Drift = 0.00 dB
Peak SAR (extrapolated) = 0.127 W/kg
SAR(1 g) = 0.00847 W/kg; SAR(10 g) = 0.00347 W/kg
Maximum value of SAR (measured) = 0.0246 W/kg

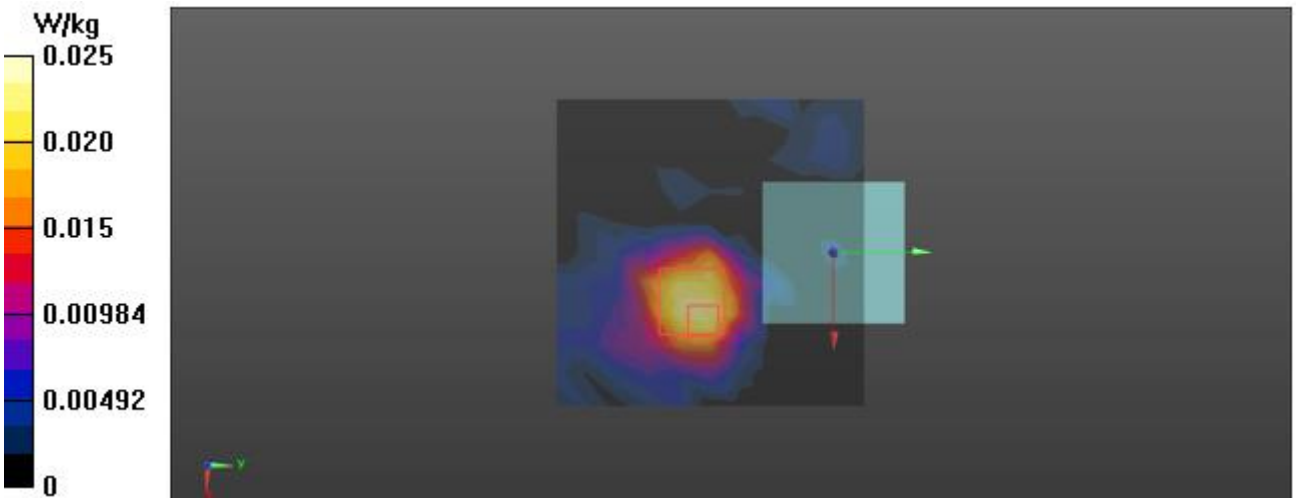

6)

Date: 2022-05-30

Test Laboratory: KCTL Inc.
File Name: 2. 5.6 GHz_802.11 a.da53:0

DUT: SM-R920, Type: Watch, Serial: R3AT400DYKB

Communication System: UID 0, 5GWLAN (0); Frequency: 5600 MHz; Duty Cycle: 1:1
Medium parameters used: f = 5600 MHz; σ = 4.897 S/m; ε_r = 35.858; ρ = 1000 kg/m^3
Phantom section: Flat Section

DASY5 Configuration:

- Probe: EX3DV4 - SN3865;ConvF(5.03, 5.03, 5.03) @ 5600 MHz; Calibrated: 2022-01-27
- Sensor-Surface: 1.4mm (Mechanical Surface Detection)
- Electronics: DAE4 Sn666; Calibrated: 2022-01-26
- Phantom: ELI V5.0 -2; Type: QD OVA 002 BB; Serial: 1220
- Measurement SW: DASY52, Version 52.10 (4);

Configuration 2/802.11 a_CH120_Rear_0 mm/Area Scan (11x11x1): Measurement grid: dx=10mm, dy=10mm
Maximum value of SAR (measured) = 0.961 W/kg

Configuration 2/802.11 a_CH120_Rear_0 mm/Zoom Scan (12x11x7)/Cube 0: Measurement grid: dx=3mm, dy=3mm, dz=1.4mm
Reference Value = 15.53 V/m; Power Drift = -0.16 dB
Peak SAR (extrapolated) = 3.69 W/kg
SAR(1 g) = 0.498 W/kg; SAR(10 g) = 0.141 W/kg
Maximum value of SAR (measured) = 1.72 W/kg

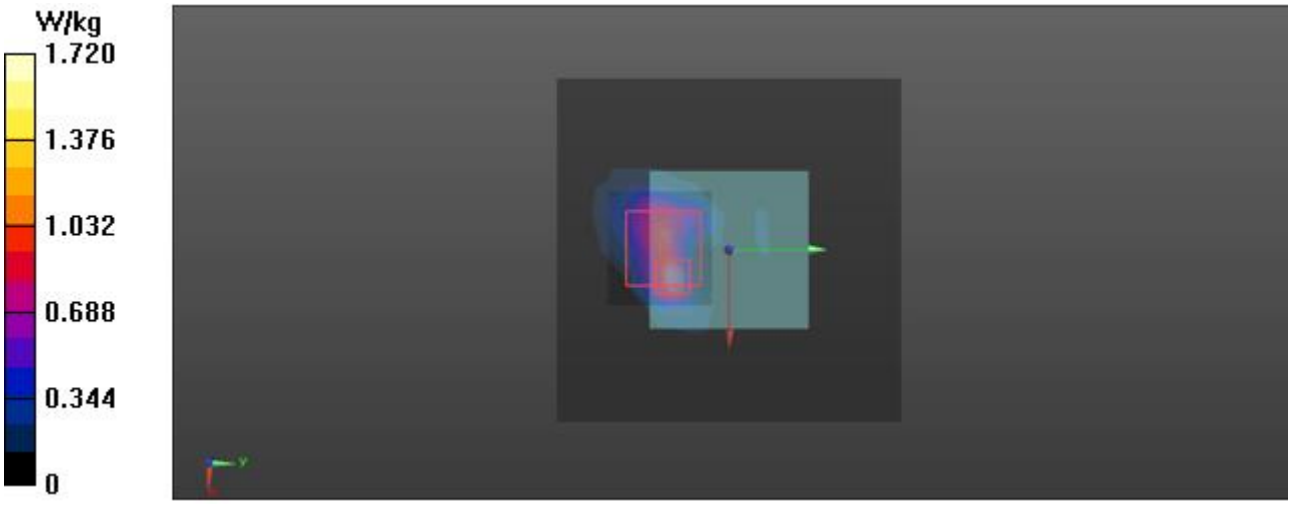

7)

Date: 2022-05-20

Test Laboratory: KCTL Inc.
File Name: 1. 5.8 GHz_802.11 a.da53:0

DUT: SM-R920, Type: Watch, Serial: R3AT400D4AT

Communication System: UID 0, 5GWLAN (0); Frequency: 5785 MHz; Duty Cycle: 1:1
Medium parameters used (interpolated): f = 5785 MHz; σ = 5.4 S/m; ε_r = 35.033; ρ = 1000 kg/m^3
Phantom section: Flat Section

DASY5 Configuration:

- Probe: EX3DV4 - SN3865;ConvF(5.03, 5.03, 5.03) @ 5785 MHz; Calibrated: 2022-01-27
- Sensor-Surface: 1.4mm (Mechanical Surface Detection)
- Electronics: DAE4 Sn666; Calibrated: 2022-01-26
- Phantom: ELI V5.0 -2; Type: QD OVA 002 BB; Serial: 1220
- Measurement SW: DASY52, Version 52.10 (4);

Configuration/802.11 a_CH157_Front_10 mm/Area Scan (13x13x1): Measurement grid: dx=10mm, dy=10mm

Info: Interpolated medium parameters used for SAR evaluation.
Maximum value of SAR (measured) = 0.0185 W/kg

Configuration/802.11 a_CH157_Front_10 mm/Zoom Scan (8x8x7)/Cube 0: Measurement grid: dx=4mm, dy=4mm, dz=1.4mm
Reference Value = 0 V/m; Power Drift = 0.00 dB
Peak SAR (extrapolated) = 0.0770 W/kg
SAR(1 g) = 0.00487 W/kg; SAR(10 g) = 0.00142 W/kg

Info: Interpolated medium parameters used for SAR evaluation.
Maximum value of SAR (measured) = 0.0145 W/kg

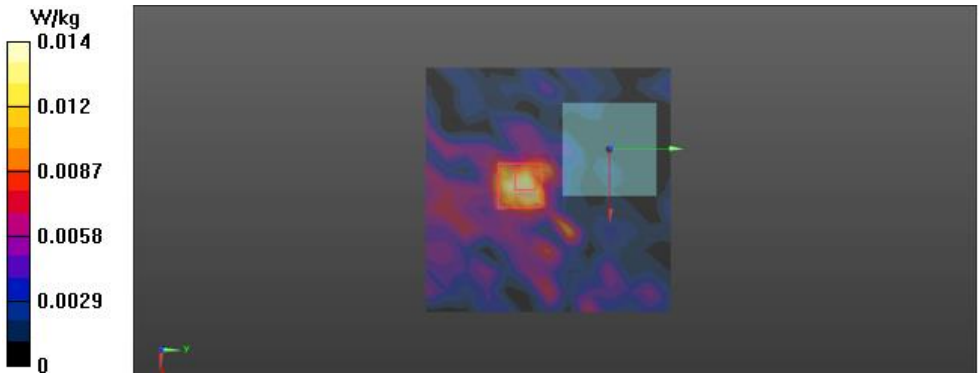

8)

Date: 2022-05-30

Test Laboratory: KCTL Inc.
File Name: 3. 5.8 GHz_802.11 a.da53:0

DUT: SM-R920, Type: Watch, Serial: R3AT400DYKB

Communication System: UID 0, 5GWLAN (0); Frequency: 5785 MHz; Duty Cycle: 1:1
Medium parameters used (interpolated): f = 5785 MHz; σ = 5.083 S/m; ε_r = 35.544; ρ = 1000 kg/m^3
Phantom section: Flat Section

DASY5 Configuration:

- Probe: EX3DV4 - SN3865;ConvF(5.03, 5.03, 5.03) @ 5785 MHz; Calibrated: 2022-01-27
- Sensor-Surface: 1.4mm (Mechanical Surface Detection)
- Electronics: DAE4 Sn666; Calibrated: 2022-01-26
- Phantom: ELI V5.0 -2; Type: QD OVA 002 BB; Serial: 1220
- Measurement SW: DASY52, Version 52.10 (4);

Configuration 2/802.11 a_CH157_Rear_0 mm/Area Scan (11x11x1): Measurement grid: dx=10mm, dy=10mm

Info: Interpolated medium parameters used for SAR evaluation.
Maximum value of SAR (measured) = 0.300 W/kg

Configuration 2/802.11 a_CH157_Rear_0 mm/Zoom Scan (12x11x7)/Cube 0: Measurement grid: dx=3mm, dy=3mm, dz=1.4mm
Reference Value = 9.053 V/m; Power Drift = 0.00 dB
Peak SAR (extrapolated) = 1.24 W/kg
SAR(1 g) = 0.126 W/kg; SAR(10 g) = 0.028 W/kg

Info: Interpolated medium parameters used for SAR evaluation.
Maximum value of SAR (measured) = 0.538 W/kg

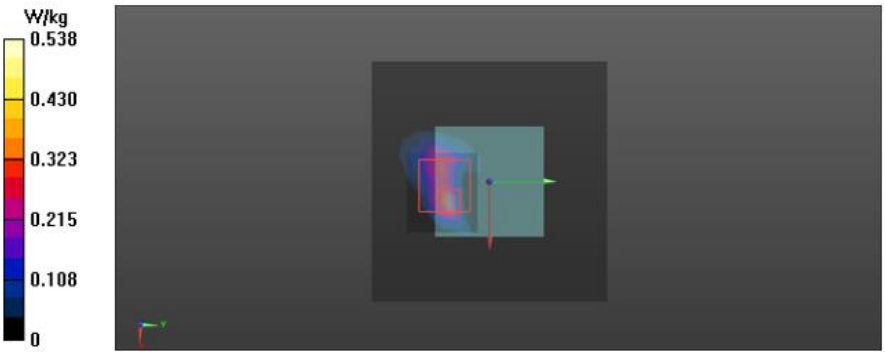

9)

Date: 2022-05-31

Test Laboratory: KCTL Inc.
File Name: 1. Bluetooth_BDR_DH5.da53:0

DUT: SM-R920, Type: Watch, Serial: R3AT400DZMM

Communication System: UID 0, Bluetooth (0); Frequency: 2441 MHz; Duty Cycle: 1:1.30167
Medium parameters used (interpolated): f = 2441 MHz; σ = 1.81 S/m; ε_r = 39.016; ρ = 1000 kg/m^3
Phantom section: Flat Section

DASY5 Configuration:

- Probe: EX3DV4 - SN3865;ConvF(7.82, 7.82, 7.82) @ 2441 MHz; Calibrated: 2022-01-27
- Sensor-Surface: 1.4mm (Mechanical Surface Detection)
- Electronics: DAE4 Sn666; Calibrated: 2022-01-26
- Phantom: ELI V5.0 -3; Type: QD OVA 002 AA; Serial: 1173
- Measurement SW: DASY52, Version 52.10 (4);

Configuration/BDR_DH5_CH39_Front_10 mm/Area Scan (10x10x1): Measurement grid: dx=12mm, dy=12mm

Info: Interpolated medium parameters used for SAR evaluation.
Maximum value of SAR (measured) = 0.172 W/kg

Configuration/BDR_DH5_CH39_Front_10 mm/Zoom Scan (7x7x7)/Cube 0: Measurement grid: dx=5mm, dy=5mm, dz=5mm
Reference Value = 8.549 V/m; Power Drift = 0.06 dB
Peak SAR (extrapolated) = 0.229 W/kg
SAR(1 g) = 0.124 W/kg; SAR(10 g) = 0.061 W/kg

Info: Interpolated medium parameters used for SAR evaluation.
Maximum value of SAR (measured) = 0.190 W/kg

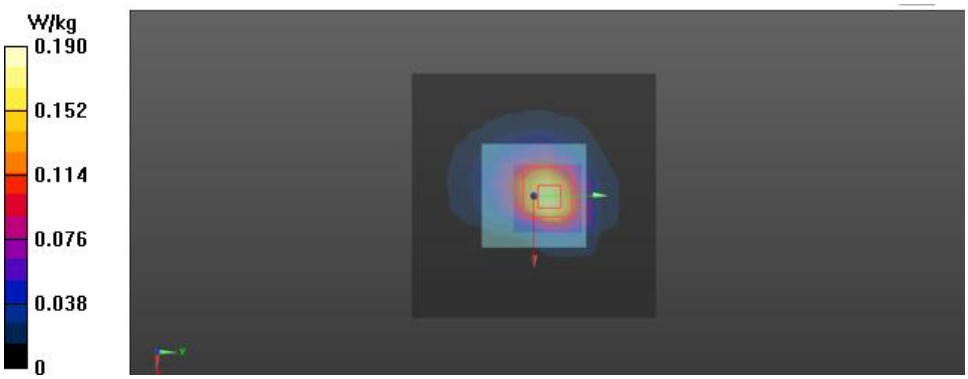

10)

Date: 2022-05-31

Test Laboratory: KCTL Inc.
File Name: 1. Bluetooth_BDR_DH5.da53:1

DUT: SM-R920, Type: Watch, Serial: R3AT400DYKB

Communication System: UID 0, Bluetooth (0); Frequency: 2441 MHz; Duty Cycle: 1:1.30167
Medium parameters used (interpolated): f = 2441 MHz; σ = 1.81 S/m; ε_r = 39.016; ρ = 1000 kg/m^3
Phantom section: Flat Section

DASY5 Configuration:

- Probe: EX3DV4 - SN3865;ConvF(7.82, 7.82, 7.82) @ 2441 MHz; Calibrated: 2022-01-27
- Sensor-Surface: 1.4mm (Mechanical Surface Detection)
- Electronics: DAE4 Sn666; Calibrated: 2022-01-26
- Phantom: ELI V5.0 -3; Type: QD OVA 002 AA; Serial: 1173
- Measurement SW: DASY52, Version 52.10 (4);

Configuration 2/BDR_DH5_CH39_Rear_0 mm/Area Scan (11x11x1): Measurement grid: dx=12mm, dy=12mm

Info: Interpolated medium parameters used for SAR evaluation.
Maximum value of SAR (measured) = 0.422 W/kg

Configuration 2/BDR_DH5_CH39_Rear_0 mm/Zoom Scan (8x8x7)/Cube 0: Measurement grid: dx=5mm, dy=5mm, dz=5mm
Reference Value = 17.72 V/m; Power Drift = 0.06 dB
Peak SAR (extrapolated) = 1.03 W/kg
SAR(1 g) = 0.337 W/kg; SAR(10 g) = 0.104 W/kg

Info: Interpolated medium parameters used for SAR evaluation.
Maximum value of SAR (measured) = 0.754 W/kg

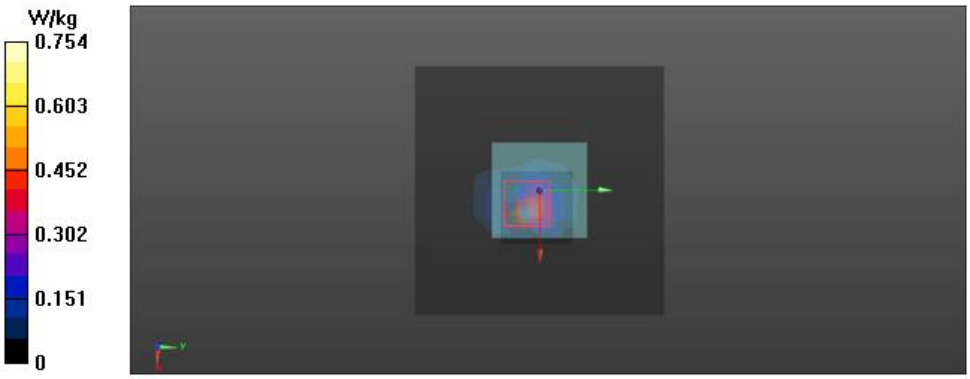

Appendixes List

Appendix A	A.1 Probe Calibration certificate (EX3DV4_3865) A.2 Dipole Calibration certificate (D2450V2_895) A.3 Dipole Calibration certificate (D5GHzV2_1134) A.4 Justification for Extended SAR Dipole Calibrations
Appendix B	SAR Tissue Specification
Appendix C	#Antenna Location & Distance
Appendix D	EUT Photo
Appendix E	Test Setup Photo