HCT Co., Ltd.
74, Seoicheon-ro 578beon-gil, Majang-myeon, Icheon-si, Gyeonggi-do, 17383 KOREA
Tel. +82 31 645 6300 Fax. +82 31 645 6401

HAC T-COIL Test Report

Applicant Name: **SAMSUNG Electronics Co., Ltd.** 129, Samsung-ro, Yeongtong-gu, Suwon-Si, Gyeonggi-do, 16677 Rep. of Korea	**Date of Issue: Oct. 19, 2023** **Test Report No.: HCT-SR-2310-FC012** **Test Site: HCT CO., LTD.**

FCC ID:	**A3LSMS926U**
Equipment Type:	**Mobile Phone**
Application Type	**Certification**
FCC Rule Part(s):	**FCC 47 CFR §20.19 , ANSI C63.19-2019**
Model Name:	**SM-S926U**
Additional Model Name:	**SM-S926U1**
Date of Test:	**Sep. 19, 2023 ~ Oct. 19, 2023**

C63.19-2019 HAC Result	**PASS**

This wireless portable device has been shown to be hearing-aid compatible under the above rated category, specified in ANSI/IEEE Std. C63.19-2019 and had been tested in accordance with the specified measurement procedures. Hearing-Aid Compatibility is based on the assumption that all production units will be designed electrically identical to the device tested in this report.
I attest to the accuracy of data. All measurements reported herein were performed by me or were made under my supervision and are correct to the best of my knowledge and belief. I assume full responsibility for the completeness of these measurements and vouch for the qualifications of all persons taking them.

Tested By

Jee-ill Lee
Test Engineer
SAR Team
Certification Division

Reviewed By

Yun-jeang, Heo
Technical Manager
SAR Team
Certification Division

This report only responds to the tested sample and may not be reproduced, except in full, without written approval of the HCT Co., Ltd.

REVISION HISTORY

The revision history for this test report is shown in table.

Revision No.	Date of Issue	Description
0	Oct. 19, 2023	Initial Release

This test results were applied only to the test methods required by the standard.

The above Test Report is not related to the accredited test result by (KS Q) ISO/IEC 17025 and KOLAS(Korea Laboratory Accreditation Scheme), which signed the ILAC-MRA.

Table of Contents

1. Test Regulations 4
2. ATTESTATION OF TEST RESULT OF DEVICE UNDER TEST 5
3. DEVICE UNDER TEST DESCRIPTION 6
4. Test Methodology 7
5. Measuring Instrument Calibraion 8
6. Measurement Uncertainty 9
7. Test Procedures for all Technologies 10
8. Audio Level and Gain Measurements 15
9 T-coil Measurement Criteria 18
10. Device Under Test 20
11. Air Interfaces and Operating Mode 21
12. HAC (T-coil) Test Results 22
Attachment 1. HAC T-COIL Test Plots 47

1. Test Regulations

The tests were performed according to the following regulations:

Test Standard	FCC 47 CFR §20.19, ANSI C63.19-2019
Test Method	· FCC CFR47 Part 20.19 · ANSI C63.19 2019-version · FCC KDB 285076 D01 HAC Guidance v06r04 · FCC KDB 285076 D02 T Coil testing v04 · FCC KDB 285076 D03 HAC FAQ v01r06

2. ATTESTATION OF TEST RESULT OF DEVICE UNDER TEST

Test Laboratory	
Company Name:	HCT Co., LTD
Address:	74, Seoicheon-ro 578beon-gil, Majang-myeon, Icheon-si, Gyeonggi-do, 17383, Rep. of Korea
Telephone:	+82 31 645 6300
Fax.:	+82 31 645 6401

Attestation of SAR test result	
Applicant Name:	SAMSUNG Electronics Co., Ltd.
Model Name:	SM-S926U
Additional Model Name:	SM-S926U1
FCC ID:	A3LSMS926U
EUT Type:	Mobile Phone
Application Type:	Certification

2.1 Test Methodology

The Tests document in this report were performed in accordance with ANSI C63.19-2019 method of Measurement of Compatibility between Wireless Communication Devices and Hearing Aids, FCC published KDB 285076 D01 HAC Guidance v06r04, FCC published KDB 285076 D02 HAC T-Coil Testing v04, FCC Published KDB285076 D03 HAC FAQ v01r06 and TCB Workshop updates .

3. DEVICE UNDER TEST DESCRIPTION

3.1 DUT specification

Device Wireless specification overview		
Band & Mode	**Operating Mode**	**Tx Frequency**
GSM850	Voice / Data	824.2 MHz ~ 848.8 MHz
GSM1900	Voice / Data	1 850.2 MHz ~ 1 909.8 MHz
UMTS Band 2	Voice / Data	1 852.4 MHz ~ 1 907.6 MHz
UMTS Band 4	Voice / Data	1 712.4 MHz ~ 1 752.6 MHz
UMTS Band 5	Voice / Data	826.4 MHz ~ 846.6 MHz
LTE FDD Band 2 (PCS)	Voice / Data	1 850.7 MHz ~ 1 909.3 MHz
LTE FDD Band 4 (AWS)	Voice / Data	1 710.7 MHz ~ 1 754.3 MHz
LTE FDD Band 5 (Cell)	Voice / Data	824.7 MHz ~ 848.3 MHz
LTE FDD Band 7	Voice / Data	2 502.5 MHz ~ 2 567.5 MHz
LTE FDD Band 12	Voice / Data	699.7 MHz ~ 715.3 MHz
LTE FDD Band 13	Voice / Data	779.5 MHz ~ 784.5 MHz
LTE FDD Band 14	Voice / Data	790.5 MHz ~ 795.5 MHz
LTE FDD Band 25	Voice / Data	1 850.7 MHz ~ 1 914.3 MHz
LTE FDD Band 26	Voice / Data	814.7 MHz ~ 848.3 MHz
LTE FDD Band 30	Voice / Data	2 307.5 MHz ~ 2 312.5 MHz
LTE TDD Band 38	Voice / Data	2 572.5 MHz ~ 2 617.5 MHz
LTE TDD Band 41	Voice / Data	2 498.5 MHz ~ 2 687.5 MHz
LTE TDD Band 48	Voice / Data	3 552.5 MHz ~ 3 697.5 MHz
LTE FDD Band 66 (AWS)	Voice / Data	1 710.7 MHz ~ 1 779.3 MHz
LTE FDD Band 71	Voice / Data	665.5 MHz ~ 695.5 MHz
NR FDD Band n2 (PCS)	Voice / Data	1 852.5 MHz ~ 1 907.5 MHz
NR FDD Band n5	Voice / Data	826.5 MHz ~ 846.5 MHz
NR FDD Band n7	Voice / Data	2 502.5 MHz ~ 2 567.5 MHz
NR FDD Band n12	Voice / Data	701.5 MHz ~ 713.5 MHz
NR FDD Band n25 (PCS)	Voice / Data	1 852.5 MHz ~ 1 912.5 MHz
NR FDD Band n26	Voice / Data	816.5 MHz ~ 846.5 MHz
NR FDD Band n30	Voice / Data	2 307.5 MHz ~ 2 312.5 MHz
NR TDD Band n38	Voice / Data	2 575 MHz ~ 2 615 MHz
NR TDD Band n41	Voice / Data	2 501.01 MHz ~ 2 685 MHz
NR TDD Band n48	Voice / Data	3 555 MHz ~ 3 695.01 MHz
NR FDD Band n66	Voice / Data	1 712.5 MHz ~ 1 777.5 MHz
NR FDD Band n70	Voice / Data	1 697.5 MHz ~ 1 707.5 MHz
NR FDD Band n71	Voice / Data	665.5 MHz ~ 695.5 MHz
NR TDD Band n77	Voice / Data	3 705 MHz ~ 3 975 MHz
NR TDD Band n77 DoD	Voice / Data	3 445.01 MHz ~ 3 544.98 MHz
NR TDD Band n78	Voice / Data	3 705 MHz ~ 3 795 MHz
NR TDD Band n78 DoD	Voice / Data	3 455.01 MHz ~ 3 544.98 MHz
NR Band n258	Data	24 250 MHz ~ 24 450 MHz; 24 750 MHz ~ 25 250 MHz
NR Band n260	Data	37 000 MHz ~ 40 000 MHz
NR Band n261	Data	27 500 MHz ~ 28 350 MHz
U-NII-1	Voice / Data	5 180 MHz ~ 5 240 MHz
U-NII-2A	Voice / Data	5 260 MHz ~ 5 320 MHz
U-NII-2C	Voice / Data	5 500 MHz ~ 5 720 MHz
U-NII-3	Voice / Data	5 745 MHz ~ 5 825 MHz
U-NII-4	Voice / Data	5 845 MHz ~ 5 885 MHz
U-NII-5	Voice / Data	5 925 MHz – 6 425 MHz
U-NII-6	Voice / Data	6 425 MHz – 6 525 MHz
U-NII-7	Voice / Data	6 525 MHz – 6 865 MHz
U-NII-8	Voice / Data	6 865 MHz – 7 115 MHz
2.4 GHz WLAN	Voice / Data	2 412 MHz ~ 2 462 MHz
Bluetooth / LE 5.3	Data	2 402 MHz ~ 2 480 MHz
NFC	Data	13.56 MHz
WPC	Data	110 kHz ~ 148 kHz

Device Description	
S/W Version	S926U.001
H/W Version	REV1.0
Battery	EB-BS926ABY (ATL)

4. Test Methodology

The tests documented in this report were performed in accordance with ANSI C63.19-2019 Methods of Measurement of Compatibility between Wireless Communications Devices and Hearing Aids and FCC published procedure

KDB 285076 D01 HAC Guidance v06r04

KDB 285076 D03 HAC FAQ v01r06

TCB workshop updates

KDB 285076 D02 T-Coil testing v04

5. Measuring Instrument Calibraion

The measuring equipment used to perform the tests documented in this report has been calibrated in accordance with the manufacturers' recommendations and is traceable to recognized national standards.

Name of Equipment	Manufacturer	Type/Model	Serial No.	Cal. Due Date
ABM Probe	SPEAG	AM1DV3	3049	05/23/2024
ABM Probe	SPEAG	AM1DV3	3153	04/19/2024
Data Acquisition Electronics	SPEAG	DAE4	1417	03/01/2024
Data Acquisition Electronics	SPEAG	DAE4	648	04/25/2024
DAC	Sound Devices	USBPre 2	HB1319212059	N/A
Radio Communication Tester	R & S	CMW 500	167916	09/21/2024
Radio Communication Tester	R & S	CMW 500	167918	03/23/2024
Radio Communication Tester	R & S	CMW 500	127521	04/25/2024
USB Audio Module	KEYSIGHT	U8903B-UAM	101006	N/A
UXM 5G Wireless Test Set	KEYSIGHT	E7515B	MY58460166	08/01/2024

6. Measurement Uncertainty

Measurement Uncertainty for Audio Band Magnetic Measurement

Error Description	Uncertainty ± %	Probability distribution	Div.	*ci* ABMd	*ci* ABMu	Std. Unc. ABMd	Std. Unc. ABMu
Probe Sensitivity							
ReFerence Level	3.0	N	1	1	1	3.0	3.0
AMCC Geometry	0.4	R	1.73	1	1	0.2	0.2
AMCC Current	1.0	R	1.73	1	1	0.6	0.6
Porbe Positioning during Calibr.	0.1	R	1.73	1	1	0.1	0.1
Noise Contribution	0.7	R	1.73	0.0143	1	0.0	0.4
Frequency Slope	5.9	R	1.73	0.1	1.0	0.3	3.5
Probe System							
Repeatability / Drift	1.0	R	1.73	1	1	0.6	0.6
Linearity / Dynamic Range	0.6	R	1.73	1	1	0.4	0.4
Acoustic Noise	1.0	R	1.73	0.1	1	0.1	0.6
Probe Angle	1.0	R	1.73	1	1	0.6	0.6
Spectral Processing	0.9	R	1.73	1	1	0.5	0.5
Integration Time	0.6	N	1.00	1	5	0.6	3.0
Field Disturbation	0.2	R	1.73	1	1	0.1	0.1
Test Signal							
Ref. Signal Spectral Response	0.6	R	1.73	0	1	0.00	0.4
Positioning							
Probe Positioning	1.9	R	1.73	1	1	1.1	1.1
Phantom Thickness	0.9	R	1.73	1	1	0.5	0.5
DUT Positioning	1.9	R	1.73	1	1	1.1	1.1
External Contributions							
RF Interference	0.0	R	1.73	1	0.3	0.0	0.0
Test Signal Variation	2.0	R	1.73	1	1	1.2	1.2
Combined Uncertaint							
Combined Std. Uncertainty	*(k=1)*					3.9	6.0
Expanded uncertainty	*(Coverage factor for 95%, k=2)*					**7.8**	**11.9**
Notes for table : N – Nomal, R – Rectangular, Div. - Divisor used to obtain standard uncertainty							

7. Test Procedures for all Technologies

7.1 General Procedures C63.19-2019, Section 6

ANSI C63.19-2019, Section 6

This document describes the measurement of the baseband (audio frequency) magnetic T-Coil signal from a WD. The goal is to evaluate the size of the area where a user could position their WD relative to their hearing aid's telecoil and receive an acceptable magnetically coupled signal. Three quantities are measured and evaluated. The first is the field strength of the desired signal at the center of the audio band (desired ABM signal).31 The second is the frequency response of the desired signal measured across the audio band.
This subclause describes the procedures used to measure the ABM (T-Coil) performance of the WD. Measurements shall be performed over a measurement area 50 mm square, in the measurement plane, as specified in A.3. The measurement area shall be scanned with a uniform measurement point spacing of 2.0 mm ± 0.5 mm in each X-Y axis of the plane, yielding 676 measurement points with approximately even spacing throughout the area. In addition to measuring the desired ABM signal levels, the weighted magnitude of the unintended signal shall also be determined. Weighting of the unintended and undesired ABM field shall be by the spectral and temporal weighting described in D.4 through D.6. Measurements shall not include undesired properties from the WD's RF field; therefore, use of a coaxial connection to a base station simulator or non-radiating load may be necessary. However, even then with a coaxial connection to a base station simulator or non-radiating load there may still be RF leakage from the WD, which may interfere with the desired measurement.
Measurements shall be performed with the probe coil oriented in the transverse direction, as illustrated in A.3, that is, aligned in the plane of the measurement area and perpendicular to the long dimension of the WD. A multi-stage sequence consists of first measuring the field strength of the desired T-Coil signal (desired ABM signal) that is useful to a hearing aid T-Coil at each specified measurement point. The undesired magnetic component (undesired ABM field) is then measured in the same transverse orientation at each of the same measurement points. At a single location only, taken at or near the highest desired ABM signal reading, the desired ABM signal frequency response shall be determined in a third measurement stage.

Test flow for T-Coil signal test
The following steps summarize the basic test flow for determining desired ABM signal and undesired ABM field. These steps assume that a sine wave or narrowband 1/3 octave signal can be used for the measurement of desired ABM signal level. An alternative procedure, yielding equivalent results, using a broadband excitation is described in 6.5.

a) A validation of the test setup and instrumentation shall be performed. This may be done using a TMFS or Helmholtz Coil. Measure the emissions and confirm that they are within tolerance of the expected values.

b) Confirm that equipment that requires calibration has been calibrated, and that the noise level meets the requirements given in 6.3.2.

c) Position the WD in the test setup and connect the WD RF connector to a base station simulator or a non-radiating load (if necessary to control RF interference in the measurement equipment) as shown in Figure 6.1 or Figure 6.2.

d) The drive level to the WD is set such that the reference input level specified in Table 6.1 is input to the base station simulator (or manufacturer's test mode equivalent) in the 1 kHz, 1/3 octave band. This drive level shall be used for the T-Coil signal test (desired ABM signal) at ***f*** = 1 kHz.
Either a sine wave at 1025 Hz, or a voice-like signal, band-limited to the 1 kHz 1/3 octave, as specified in 6.4.3, shall be used for the reference audio signal. If interference is found at 1025 Hz an alternative nearby reference audio signal frequency may be used.[35] The same drive level will be used for the desired ABM signal frequency response measurements at each 1/3 octave band center frequency. The WD volume control may be set at any level up to maximum, provided that a signal at any frequency at maximum modulation would not result in clipping or signal overload.

e) At each measurement location over the measurement area and in the transverse orientation, measure and record the desired 1 kHz T-Coil magnetic signal (desired ABM signal) as described in Step c).

f) At or near a location representing a maximum in the just-measured desired ABM signal, measure and record the desired T-Coil magnetic signals (desired ABM signal at f_i) as described in 6.4.5.2 in

each individual ISO 266:1975 R10 standard 1/3 octave band. The desired audio band input frequency (f_i) shall be centered in each 1/3 octave band maintaining the same drive level as determined in Step c), and the reading taken for that band. Equivalent methods of determining the frequency response may also be employed, such as fast Fourier transform (FFT) analysis using noise excitation or input–output comparison using simulated speech. The full-band integrated or half-band integrated probe output, as described in D.9, may be used, as long as the appropriate calibration curve is applied to the measured result, so as to yield an accurate measurement of the field magnitude. (The resulting measurement shall be an accurate measurement in dB(A/m).) Compare the frequency response found to the requirements of 6.6.3.

g) At the same locations measured in Step d), measure and record the undesired broadband audio magnetic signal (undesired ABM field) with no audio signal applied (or digital zero applied, if appropriate) using the specified spectral weighting, the half-band integrator followed by the temporal weighting.

h) Calculate and record the location and number of the measurement points that satisfy both the minimum desired ABM signal level and the maximum undesired ABM field level specified in 6.6.2. Compare this to the requirements in 6.6.4 and record the result.

i) Calculate and record the location and number of the measurement points that satisfy the maximum undesired ABM field level and distribution requirements specified in 6.6.4.

All measurements of the desired signal shall be shown to be of the desired signal and not of an undesired signal. This may be shown by turning the desired signal ON and OFF with the probe measuring the scanned locations.

At the measurement location for each orientation, measure and record the undesired broadband audio magnetic signal (ABM2) as specified in 6.4.2 g) with no audio signal applied (or digital zero applied, if appropriate) using A-weighting and the half-band integrator. Calculate the ratio of the desired to undesired signal strength (i.e., signal quality).
Obtain the data from the postprocessor, SEMCAD, and determine the primary group, secondary group that properly the signal quality based on Table 8.

Test Setup Diagram

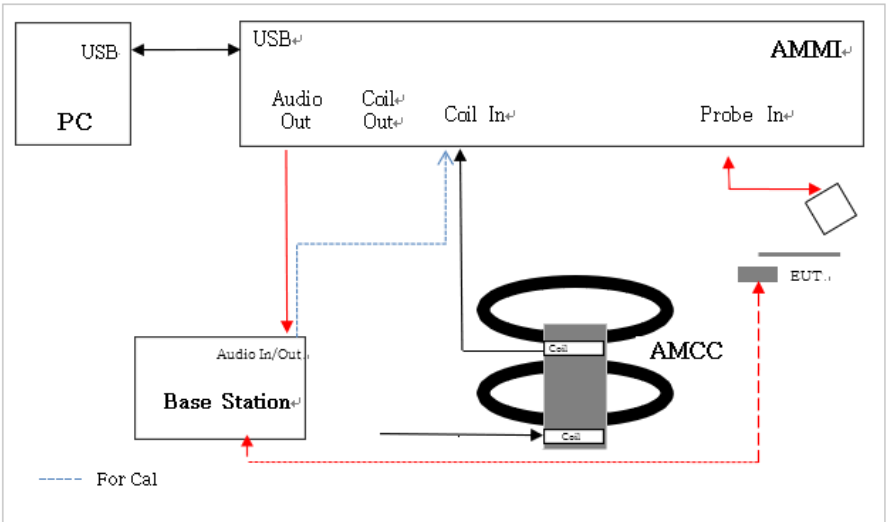

7.2 VoWiFi

This device supports Wi-Fi calling (aka Voice over Wi-Fi or VoWiFi) which is an extended feature of the carriers CMRS service to offload VoLTE calls onto local area networks over WI-FI via the internet and subject to HAC assessment for phones with a HAC rating.

The set up for VoWiFi uses the Base station as described in section **7.1** with the exception that the reference audio level is set at -16dBm0. The reference level is calibrated using the standard call box calibration procedures with the exception of the -16dBm0 reference level being used (refer to section 8.4).

An investigation was performed to determine worst case codec, bit rate and air interface configuration (refer to sections 12.5 and 12.6).

7.3 Over the Top(OTT)

This device supports VoIP via a preinstalled application that uses the Google Meet service, using OPUS as its only codec (refer to §11 for air interface details and §12.7 for codec bit rates). VoIP capabilities require HAC assessment when voice calls are supported over the cellular data connection via pre-installed VoIP applications.

The equipment is set up as shown below with a support device used to originate the call using the IP transport. The support device connects to the cloud-based Google Meet service via Wi-Fi access point and router, or RJ45. The DUT connects to the VoIP service via a cellular/unlicensed air interface to the call box and an Ethernet connection from call box to Internet. The various codec bit rate and air interface configurations are evaluated to determine the worst-case configuration (refer to §12.7).

Test Setup configuration for OTT calls

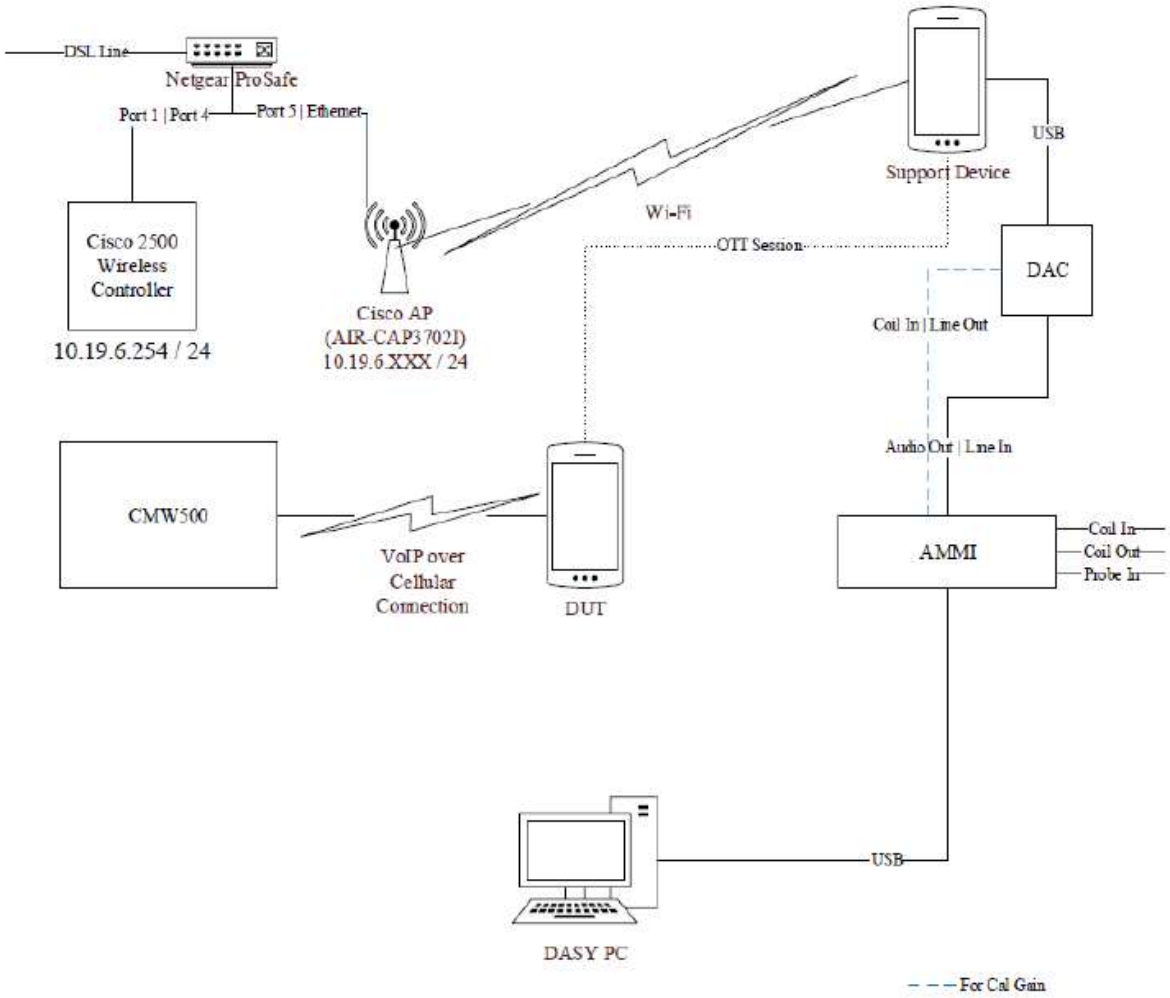

For the OTT call, the calibrated audio card within the CMW500 cannot be used so the AMMI is connected to an external Digital-Analog Converter (DAC) and the DAC is connected to the Support Device via USB. The test signal is sent from the DASY PC to the AMMI, from the AMMI to the DAC, from the DAC to the Support Device, and, via the VoIP call, to the DUT.

As this test set up uses an external DAC between the AMMI's audio output and support device, the appropriate gain factor for the OTT call needs be determined. This is done by connecting the DAC between the AMMI Audio output and Coil input as shown below.

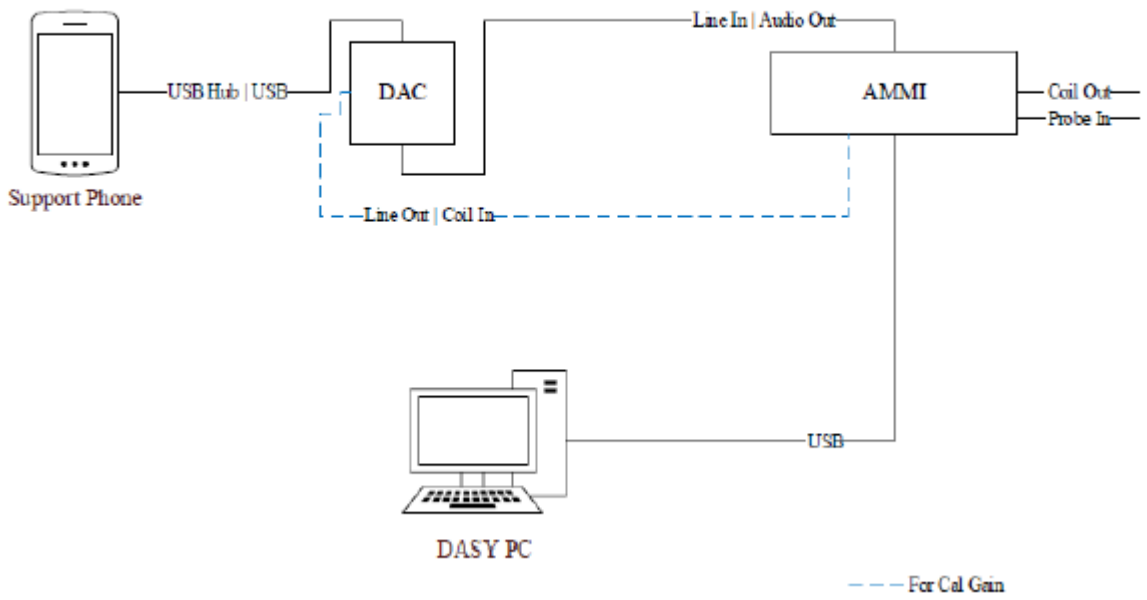

Using the metering function on the DAC, the DAC gain is adjusted until the volume reaches 0 dBFS (3.14 dBm0 based on TIA/EIA 810-A).

8. Audio Level and Gain Measurements

8.1 GSM,WCDMA,LTE,Wifi, NR

Refer to the below table for the gains used to measure

GSM, WCDMA, LTE TDD, Wifi

Signal Type	Audio Level [dBm]	Peak to Full Scale [dB]	Peak to RMS Scale [dB]	BWC [dB]	Scaling [Gain]
Voice 1 ㎑	-16	-0.37	15.74	0.07	-12.50
Normal Voice	-16	0	21.57	10.81	-6.67

LTE FDD

Signal Type	Audio Level [dBm]	Peak to Full Scale [dB]	Peak to RMS Scale [dB]	BWC [dB]	Scaling [Gain]
Voice 1 ㎑	-16	-0.37	15.74	0.07	-12.29
Normal Voice	-16	0	21.57	10.81	-6.46

NR

Signal Type	Audio Level [dBm]	Peak to Full Scale [dB]	Peak to RMS Scale [dB]	BWC [dB]	Scaling [Gain]
Voice 1 ㎑	-16	-0.37	15.74	0.07	-6.86
Normal Voice	-16	0	21.57	10.81	-1.03

Refer to the below table for the gains used to measure VoLTE.

The following software/firmware was used to simulate the VoLTE server for testing:

Firmware	License Keys	Software Name
V3.7.30 for LTE	KS500	LTE FDD R8 SIG BASIC
	KS550	LTE TDD R8 SIG BASIC
V3.7.20 for Audio	KA100	IP APPL ENABLING IPv4
	KA150	IP APPL ENABLING IPv6
	KAA20	IP APPL IMS BASIC
	KM050	DATA APPL MEAS
	KS104	EVS SPEECH CODEC

Refer to the below table for the gains used to measure VoWi-Fi.

Firmware	License Keys	Software Name
V3.7.40 for WLAN	KS650	WLAN A/B/G SIG BASIC
	KS651	WLAN N SIG BASIC
	KS656	WLAN IEEE 802.11ac
	KS657	WLAN IEEE 802.11ax
V3.7.20 for Audio	KA100	IP APPL ENABLING IPv4
	KA150	IP APPL ENABLING IPv4
	KAA20	IP APPL IMS BASIC
	KM050	DATA APPL MEAS
	KS104	EVS SPEECH CODEC

Refer to the below table for the gains used to measure VoNR of Call Box(E7515B)

The following software/firmware was used to simulate the VoNR server for testing:

Firmware	License Model	Software Name
5G NR	C8700200A	Test Applicaton Framework
Audio	C8700201A	IMS-SIP Emulation
	C87300P1A	LTE IP data
	C87350P1A	5G NR IP data

8.2 OTT

Over the Top(OTT)

For EDGE, HSPA, LTE, NR and Wi-Fi the linear gain levels listed below were used. The results below are based on a reference input level of -16 dBm.

To calibrate the DAC (refer §7.3), three. Way audio files (sine wave, 1 ㎑ voice, and 300 to 3 ㎑ voice) are sent from the DASY5 PC to the AMMI, then to the DAC. The Helmholtz resonator measures the field strength, which represents the AMMI to DAC input sensitivity. After determining the input sensitivity, the adjusted linear gain values can then be calculated.

WCDMA, LTE, Wifi

Signal Type	Audio Level [dBm]	Peak to Full Scale [dB]	Peak to RMS Scale [dB]	BWC [dB]	Scaling [Gain]
Voice 1 ㎑	-16	-0.37	15.74	0.07	-8.79
Normal Voice	-16	0	21.57	10.81	-2.95

GSM

Signal Type	Audio Level [dBm]	Peak to Full Scale [dB]	Peak to RMS Scale [dB]	BWC [dB]	Scaling [Gain]
Voice 1 ㎑	-16	-0.37	15.74	0.07	-8.73
Normal Voice	-16	0	21.57	10.81	-2.90

NR

Signal Type	Audio Level [dBm]	Peak to Full Scale [dB]	Peak to RMS Scale [dB]	BWC [dB]	Scaling [Gain]
Voice 1 ㎑	-16	-0.37	15.74	0.07	-9.03
Normal Voice	-16	0	21.57	10.81	-3.20

9 T-coil Measurement Criteria

9.1 Frequency Respones

The frequency response of the axial component of the magnetic field, measured in 1/3 octave bands, shall follow the response curve, over the frequency range 300 Hz to 3000 Hz.
Figure 6.4 and Figure 6.5 provide the boundaries for the specified frequency. These response curves are for true field strength measurements of the T-Coil signal. Thus the 6 dB/octave probe response has been corrected from the raw readings.

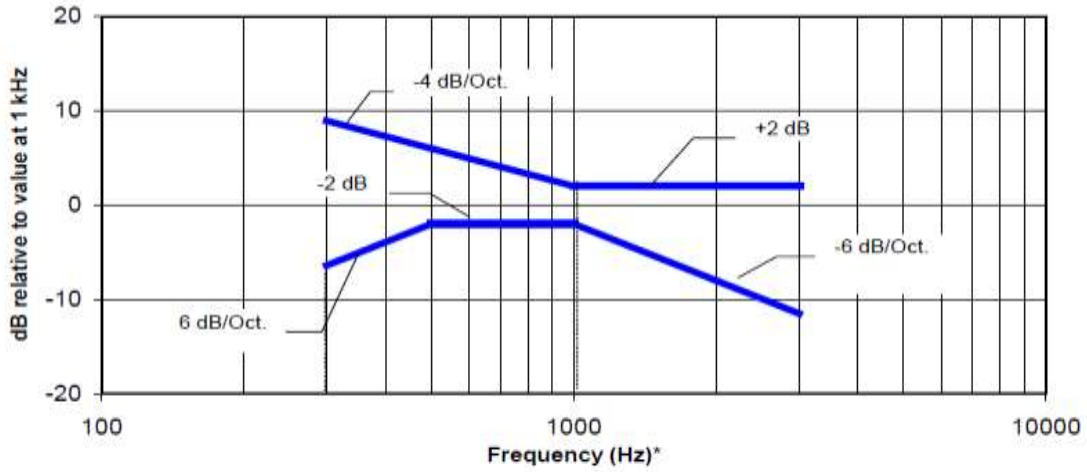

NOTE—Frequency response is between 300 Hz and 3 kHz.

Figure 6.4—Magnetic field frequency response for WDs with a maximum field ≤−15 dB(A/m) at 1 kHz

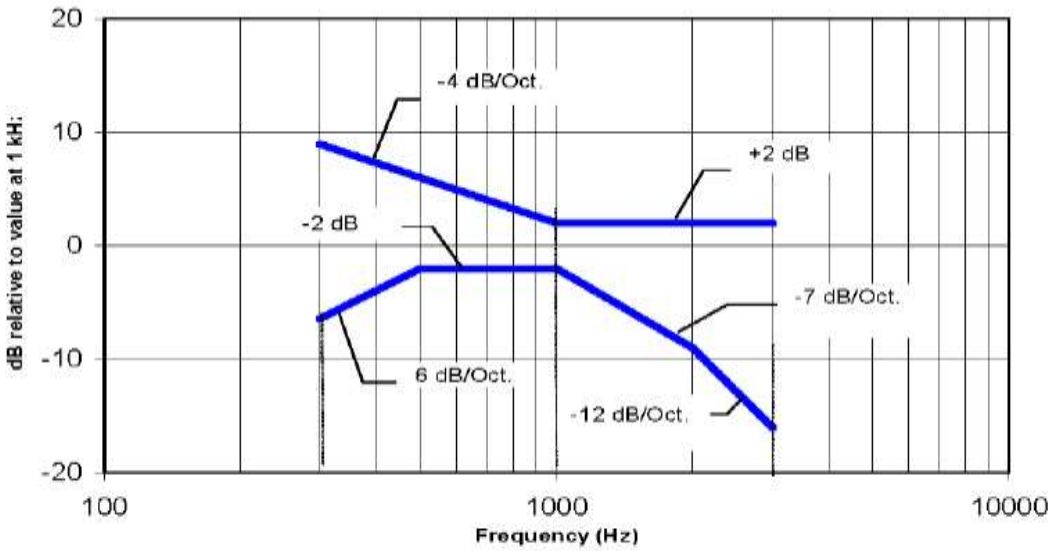

NOTE—Frequency response is between 300 Hz and 3000 Hz.

Figure 6.5—Magnetic field frequency response for WDs with a maximum field that exceeds −15 dB(A/m) at 1 kHz

9.2 Desired ABM Signal, Undesired ABM Field qualification requirements

For a WD that is expected to operate primarily in radio access technologies that include 2G GSM for legacy support, the WD shall be qualified for telecoil compatibility one of two ways:

a) The WD shall be rated for telecoil use for all other voice operating modes, exclusive of 2G GSM, according to the criteria of 6.6.4.2.

b) If the WD is to be rated for telecoil use in its 2G GSM operating modes, these modes shall be qualified according to the criteria of 6.6.4.3.

6.6.4.2 Non-2G GSM operating modes

The goal of this requirement is to ensure an adequate area where desired ABM signal is sufficiently strong to be heard clearly and a larger area where undesired ABM field is sufficiently low as to avoid undue annoyance. Qualifying measurement points shall fulfill the requirements of 6.6.2; both the primary and secondary group requirements shall be met:

- The primary group shall include at least 75 measurement points.
- The secondary group shall include at least 300 contiguous measurement points.

Additionally, to avoid an oddly shaped area of low noise, the secondary group shall include at least one longitudinal column of at least 10 contiguous qualifying points and at least one transverse row containing at least 15 contiguous qualifying points.

6.6.4.3 2G GSM operating modes

If the 2G GSM operating mode(s) are selected for qualification, the qualifying measurement points shall fulfil the requirements of 6.6.2; both the primary and secondary group requirements shall be met:

- The primary group shall include at least 25 measurement points.
- The secondary group shall include at least 125 contiguous measurement points.

10. Device Under Test

Normal operation	Held to head	
Back Cover	The Back Cover is not removable	
Test sample information	S/N	Notes
	WJ60227M	T-coil Test
	WJ60269M	T-coil Test
	WJC0446M	T-coil Test
	WIC0406M	T-coil Test

11. Air Interfaces and Operating Mode

Air Interface	Bands (MHz)	Type	C63.19 Tested	Simultaneous Transmitter	Audio Codecs Evaluated
GSM	850	VO	Yes	Wi-Fi, BT	EFR[1]
	1900				
	GPRS/EDGE	VD	Yes	Wi-Fi, BT	OPUS[1]
WCDMA (UMTS)	850	VO	Yes	Wi-Fi, BT	AMR-NB & AMR-WB[1]
	1700				
	1900				
	HSPA	VD	Yes	Wi-Fi, BT	OPUS[1]
LTE - FDD	680 (B71)	VD	Yes	NR,Wi-Fi, BT	(AMR-NB, AMR- WB, EVS-NB, EVS-WB & OPUS) [1]
	700 (B12/13/14)				
	850 (B5/26)				
	1700 (B4/66)				
	1900 (B2/25)				
	2300 (B30)				
	2500 (B7)				
LTE – TDD	2300 (B40)	VD	Yes	NR,Wi-Fi, BT	(AMR-NB, AMR- WB, EVS-NB, EVS-WB & OPUS) [1]
	2600 (B41(B38))				
	3600 (B48)				
NR -FDD	680(B71)	VD	Yes	LTE,Wi-Fi, BT	(AMR-NB, AMR- WB, EVS-NB, EVS-WB & OPUS) [1]
	700(B12)				
	850(B5)				
	1700(B66)				
	1900(B2/25)				
	2300(B30)				
NR -TDD	2600(B41)	VD	Yes	LTE,Wi-Fi, BT	(AMR-NB, AMR- WB, EVS-NB, EVS-WB & OPUS) [1]
	3800(B77)		Yes		
	25000 (n258)		No[2]		
	28000 (n261)		No[2]		
	39000 (n260)		No[2]		
Wi-Fi	2450	VD	Yes	WWAN, Wifi 5GHz	(AMR-NB, AMR- WB, EVS-NB, EVS-WB & OPUS) [1]
	5200 (U-NII-1)			WWAN and Wifi 2.4GHz, BT	
	5300 (U-NII-2A)				
	5500 (U-NII-2C)				
	5800 (U-NII-3)				
	5900 (U-NII-4				
	6200(UNII 5)		No[2]	WWAN and Wifi 2.4GHz, BT	
	6500(UNII 6)			WWAN and Wifi 2.4GHz, BT	
	6700(UNII 7)			WWAN and Wifi 2.4GHz, BT	
	7000(UNII 8)			WWAN and Wifi 2.4GHz, BT	
BT	2450	DT	NA	WWAN and Wifi 2.4GHz, Wifi 5GHz	N/A

Type:
VO: Legacy Cellular Voice Service
DT: Digital Transport only (no voice)
CMRS: Commercial Mobile Radio Service
VD: IP Voice service over Digital Transport

Note:
1. Ref Lev in accordance with the ANSI 63.19-2019 Table 6.1
2. N251, n260,n261, Wifi 6GHz are currently outside the scope of ANSI C63.19 and FCC HAC regulations.

This DUT dose not support VOmmWave for N251,n260,n261

12. HAC (T-coil) Test Results

12.1 Codec Investigation

An investigation between the various codec configurations (Low/High bit rates for Narrowband, Wideband) and specific parameters are documented (Primary Group, Secondary Group, longitudinal contiguous points, transverse row contiguous points, frequency response) to determine the worst-case bit rates for each voice service type. The table below compares the varying codec configurations.
A codec investigation was performed on one band of each GSM, W-CDMA, LTE FDD/TDD, NR FDD/TDD.

The highlighted results below were determined to be the worst case codec configuration(s) for GSM, WCDMA and LTE, NR.

Codec Investigation				
Codec State	AMR-NB (kbit/s)		Orientation	Band/ Channel
	FR V1	HR V1		
Freq. Response(dB)	2	1.96	y (Transversal)	GSM 850 CH.190 ANT A
Primary	28	37		
Secondary	179	201		
Contiguous Longitudinal	14	15		
Contiguous Transverse	26	26		

Codec Investigation								
Codec State	AMR-NB (kbit/s)			AMR-WB (kbit/s)			Orientation	Band/ Bandwidth/ Channel
	4.75	7.4	12.2	6.6	15.85	23.85		
Freq. Response(dB)	1.84	2	2	1.8	1.77	1.62	y (Transversal)	UMTS Band II Rel.99 CH.9400 ANT A
Primary	349	355	364	304	311	316		
Secondary	651	650	654	650	649	651		
Contiguous Longitudinal	26	26	26	26	26	26		
Contiguous Transverse	26	26	26	26	26	26		

Codec Investigation								
Codec State	AMR-NB (kbit/s)			AMR-WB (kbit/s)			Orientation	Band/ Bandwidth/ Channel
	4.75	7.4	12.2	6.6	15.85	23.85		
Freq. Response(dB)	2	2	2	2	2	1.62	y (Transversal)	LTE Band 25 CH.26365 20 ㎒ BW QPSK 1RB 0offset ANT A
Primary	359	366	311	312	324	284		
Secondary	661	665	658	663	662	612		
Contiguous Longitudinal	26	26	26	26	26	26		
Contiguous Transverse	26	26	26	26	26	26		

Codec Investigation											
Codec State	EVS-NB (kbit/s)			EVS-WB (kbit/s)			EVS-SWB (kbit/s)			Orientation	Band/ BandWidth/ Channel
	5.9	13.2	24.4	5.9	24.4	128	9.6	24.4	128		
Freq. Response(dB)	1.95	2	2	1.52	1.65	1.58	1.99	2	2	y (Transversal)	LTE Band 25 CH.26365 20 ㎒ BW QPSK 1RB 0offset ANT A
Primary	293	387	362	233	308	317	323	323	314		
Secondary	628	676	651	624	652	659	645	647	637		
Contiguous Longitudinal	26	26	26	26	26	26	26	26	26		
Contiguous Transverse	26	26	26	26	26	26	26	26	26		

NR FDD

Codec Investigation								
Codec State	AMR-NB (kbit/s)			AMR-WB (kbit/s)			Orientation	Band/ Bandwidth/ Channel
	4.75	7.4	12.2	6.6	15.85	23.85		
Freq. Response(dB)	2	1.68	1.68	1.48	1.35	1.54	y (Transversal)	NR Band 25 CH.376500 DFT-s OFDM QPSK 40 ㎒ BW 1 RB 1 Offset ANT A
Primary	305	328	322	305	308	271		
Secondary	587	607	601	638	637	597		
Contiguous Longitudinal	26	26	26	26	26	26		
Contiguous Transverse	26	26	26	26	26	26		

Codec Investigation											
Codec State	EVS-NB (kbit/s)			EVS-WB (kbit/s)			EVS-SWB (kbit/s)			Orientation	Band/ BandWidth/ Channel
	5.9	13.2	24.4	5.9	24.4	128	9.6	24.4	128		
Freq. Response(dB)	2	2	2.00	2.00	2	2	2	2	2	y (Transversal)	NR Band 25 CH.376500 DFT-s OFDM QPSK 40 ㎒ BW 1 RB 1 Offset ANT A
Primary	305	363	359	306	354	350	355	336	332		
Secondary	634	642	639	632	632	628	624	622	623		
Contiguous Longitudinal	26	26	26	26	26	26	26	26	26		
Contiguous Transverse	26	26	26	26	26	26	26	26	26		

Codec Investigation								
Codec State	AMR-NB (kbit/s)			AMR-WB (kbit/s)			Orientation	Band/ Bandwidth/ Channel
	4.75	7.4	12.2	6.6	15.85	23.85		
Freq. Response(dB)	1.81	2	2	2	2	2	y (Transversal)	LTE Band 41 CH.40620 20 ㎒ BW QPSK 1RB 0offset ANT F
Primary	126	121	124	124	129	129		
Secondary	371	363	364	394	391	389		
Contiguous Longitudinal	20	20	20	20	20	20		
Contiguous Transverse	26	26	26	26	26	26		

Codec Investigation											
Codec State	EVS-NB (kbit/s)			EVS-WB (kbit/s)			EVS-SWB (kbit/s)			Orientation	Band/ BandWidth/ Channel
	5.9	13.2	24.4	5.9	24.4	128	9.6	24.4	128		
Freq. Response(dB)	1.77	1.76	2	1.52	1.97	1.91	1.88	1.84	2	y (Transversal)	LTE Band 41 CH.40620 20 ㎒ BW QPSK 1RB 0offset ANT F
Primary	85	137	134	79	131	124	142	120	122		
Secondary	380	379	374	383	370	364	383	358	361		
Contiguous Longitudinal	20	20	20	20	20	20	20	20	20		
Contiguous Transverse	26	26	26	26	26	26	26	26	26		

NR TDD

Codec Investigation								
Codec State	AMR-NB (kbit/s)			AMR-WB (kbit/s)			Orientation	Band/ Bandwidth/ Channel
	4.75	7.4	12.2	6.6	15.85	23.85		
Freq. Response(dB)	2	2	2	2	2	2	y (Transversal)	NR Band 77 CH.656000 DFT-s OFDM QPSK 100 ㎒ BW 1 RB 1 offset ANT F
Primary	199	192	193	160	167	166		
Secondary	446	438	438	433	432	432		
Contiguous Longitudinal	22	22	22	22	22	22		
Contiguous Transverse	26	26	26	26	26	26		

Codec Investigation											
Codec State	EVS-NB (kbit/s)			EVS-WB (kbit/s)			EVS-SWB (kbit/s)			Orientation	Band/ BandWidth/ Channel
	5.9	13.2	24.4	5.9	13.2	24.4	9.6	16.4	24.4		
Freq. Response(dB)	1.88	1.6	1.39	2	1.69	2	2	1.97	1.91	y (Transversal)	NR Band 77 CH.656000 DFT-s OFDM QPSK 100 ㎒ BW 1 RB 1 Offset ANT F
Primary	164	160	159	146	160	157	179	230	160		
Secondary	448	459	460	452	454	435	432	557	454		
Contiguous Longitudinal	23	24	24	23	23	22	22	26	23		
Contiguous Transverse	26	26	26	26	26	26	26	26	26		

12.2 Air Interface Investigation

Use the worst-case codec test and document a limited set of bands/modulations/channels/bandwidth.
Observe the effect of changing the band and bandwidth to ensure that there are no unexpected variations.

GSM / W-CDMA (UMTS)

Mode	Ch. Freq.	Orientation	Primary	Secondary	Contiguous longitudinal	Contiguous Transverse	Freq. Response	Plot No.
GSM 850 Voice Coder Speech Codec: FR V1 ANT A	CH.190 836.5 MHz	y(Transversal)					2	
			28	179	14	26		
GSM 850 Voice Coder Speech Codec: FR V1 ANT E	CH.128 824.2 MHz	y(Transversal)					2	
			28	179	14	26		
	CH.190 836.5 MHz	y(Transversal)					2	
			26	167	14	26		
	CH.251 848.8 MHz	y(Transversal)					2	1
			26	155	14	26		
GSM 1900 Voice Coder Speech Codec: FR V1 ANT A	CH.661 1880.0 MHz	y(Transversal)					2	
			63	297	20	26		
W-CDMA Band II Voice AMR WB Codec: 6.6 kbit/s ANT A	CH.9262 1852.4 MHz	y(Transversal)					1.92	
			316	650	26	26		
	CH.9400 1880.0 MHz	y(Transversal)					1.8	2
			304	650	26	26		
	CH.9538 1907.6 MHz	y(Transversal)					1.67	
			313	650	26	26		
W-CDMA Band IV Voice AMR WB Codec: 6.6 kbit/s ANT A	CH.1412 1732.4 MHz	y(Transversal)					1.68	
			309	648	26	26		
W-CDMA Band V Voice AMR WB Codec: 6.6 kbit/s ANT A	CH.4183 836.6 MHz	y(Transversal)					1.97	
			309	649	26	26		
W-CDMA Band V Voice AMR WB Codec: 6.6 kbit/s ANT E	CH.4183 836.6 MHz	y(Transversal)					1.68	
			306	646	26	26		

Air Interface Investigation (Continued)

LTE-FDD

Mode	Ch. Freq.	BW	BW/ Modulation	RB Config.	Orientation	Primary	Secondary	Contiguous longitudinal	Contiguous Transverse	Freq. Response	
LTE Band 25 Voice EVS-WB Codec: 5.9 kbit/s ANT A	CH.26365 1882.5 MHz	20 MHz	QPSK	1/0						1.52	
					y(Transversal)	233	624	26	26		
				1/49						1.77	
					y(Transversal)	244	651	26	26		
				1/99						1.32	
					y(Transversal)	239	652	26	26		
				50/0						1.42	
					y(Transversal)	244	655	26	26		
				50/25						1.27	
					y(Transversal)	238	640	26	26		
				50/49						1.51	
					y(Transversal)	244	657	26	26		
				100/0						1.91	
					y(Transversal)	241	657	26	26.00		
			16QAM	1/49						1.98	
					y(Transversal)	229	633	26	26		
			64QAM	1/49						1	3
					y(Transversal)	210	635	26	26		
			256QAM	1/49						1.45	
					y(Transversal)	229	634	26	26		
		15 MHz	64QAM	1/0						1.68	
					y(Transversal)	245	655	26	26		
		10 MHz		1/0						1.69	
					y(Transversal)	228	621	26	26		
		5 MHz		1/0						1.01	
					y(Transversal)	225	624	26	26		
		3 MHz		1/0						2	
					y(Transversal)	225	622	26	26		
		1.4 MHz		1/0						1.28	
					y(Transversal)	232	621	26	26		

Air Interface Investigation(Continued)

LTE-FDD

Mode	Ch. Freq.	Band width	BW/ Mode	RB Config.	Orientation	Primary	Secondary	Contiguous longitudinal	Contiguous Transverse	Freq. Response	
LTE Band 25 Voice ANT.F	CH.26365	20 MHz	64QAM	1/0						1.46	
EVS WB Codec: 5.9 kbit/s	1882.5 MHz				y(Transversal)	255	646	26	26		
LTE Band 7 Voice ANT.B	CH.21100	20 MHz	64QAM	1/0						1.49	
EVS WB Codec: 5.9 kbit/s	2535 MHz				y(Transversal)	222	605	26	26		
LTE Band 7 Voice ANT.F	CH.21100	20 MHz	64QAM	1/0						1.24	4
EVS WB Codec: 5.9 kbit/s	2535 MHz				y(Transversal)	220	609	26	26		
LTE Band 12 voice ANT.A	CH.23095	10 MHz	64QAM	1/0						1.62	5
EVS WB Codec: 5.9 kbit/s	707.5 MHz				y(Transversal)	244	635	26	26		
LTE Band 12 voice ANT.E	CH.23095	10 MHz	64QAM	1/0						1.77	
EVS WB Codec: 5.9 kbit/s	707.5 MHz				y(Transversal)	269	661	26	26		
LTE Band 13 voice ANT.A	CH.23230	10 MHz	64QAM	1/0						1.44	6
EVS WB Codec: 5.9 kbit/s	782 MHz				y(Transversal)	220	597	26	26		
LTE Band 13 voice ANT.E	CH.23230	10 MHz	64QAM	1/0						1.82	
EVS WB Codec: 5.9 kbit/s	782 MHz				y(Transversal)	229	620	26	26		
LTE Band 14 voice ANT.A	CH.23330	10 MHz	64QAM	1/0						1.78	7
EVS WB Codec: 5.9 kbit/s	793 MHz				y(Transversal)	204	570	26	26		
LTE Band 14 voice ANT.E	CH.23330	10 MHz	64QAM	1/0						1.85	
EVS WB Codec: 5.9 kbit/s	793 MHz				y(Transversal)	218	604	26	26		
LTE Band 26 voice ANT.E	CH.26865	15 MHz	64QAM	1/0						1.67	8
EVS WB Codec: 5.9 kbit/s	831.5 MHz				y(Transversal)	204	587	26	26		
LTE Band 26 voice ANT.A	CH.26865	15 MHz	64QAM	1/0						1.2	
EVS WB Codec: 5.9 kbit/s	831.5 MHz				y(Transversal)	264	659	26	26		
LTE Band 30 Voice ANT.F	CH.23095	10 MHz	16QAM	1/0						2	
EVS WB Codec: 5.9 kbit/s	707.5 MHz				y(Transversal)	227	606	26	26		
LTE Band 30 Voice ANT.A	CH.27710	10 MHz	16QAM	1/0						1.25	9
EVS WB Codec: 5.9 kbit/s	2310 MHz				y(Transversal)	191	578	26	26		
LTE Band 66 Voice ANT.A	CH.132322	20 MHz	16QAM	1/0						2	10
EVS WB Codec: 5.9 kbit/s	1745 MHz				y(Transversal)	239	623	26	26		
LTE Band 66 Voice ANT.F	CH.132322	20 MHz	16QAM	1/0						1.39	
EVS WB Codec: 5.9 kbit/s	1745 MHz				y(Transversal)	275	667	26	26		
LTE Band 71 Voice ANT.A	CH.133297	20 MHz	16QAM	1/0						1.51	11
EVS WB Codec: 5.9 kbit/s	680.5 MHz				y(Transversal)	223	615	26	26		
LTE Band 71 Voice ANT.E	CH.133297	20 MHz	16QAM	1/0						1.56	
EVS WB Codec: 5.9 kbit/s	680.5 MHz				y(Transversal)	264	659	26	26		

NR-FDD RB/ Modulation configuration

Mode	Ch. Freq.	BW	Waceform	BW/ Modulation	RB Config.	Orientation	Primary	Secondary	Contiguous longitudinal	Contiguous Transverse	Freq. Response	
NR Band 25 ANT A AMR-WB Codec: 23.85 kbit/s	CH.376500 1882.5 MHz	40 MHz	CP-OFDM	QPSK	1/1	y(Transversal)					1.44	
							220	532	26	26		
					1/108	y(Transversal)					1.33	
							222	534	26	26		
					1/214	y(Transversal)					1.38	
							223	536	26	26		
					108/0	y(Transversal)					1.49	
							227	538	26	26		
					108/54	y(Transversal)					1.4	
							229	536	26	26		
					108/108	y(Transversal)					1.49	
							227	535	26	26		
					216/0	y(Transversal)					1.47	
							225	532	26	26		
				16QAM	1/1	y(Transversal)					1.42	
							230	540	26	26		
				64QAM	1/1	y(Transversal)					1.48	
							207	516	26	26		
				256QAM	1/1	y(Transversal)					1.38	
							210	515	26	26		
			DFTs-OFDM	QPSK	1/1	y(Transversal)					1.54	
							271	597	26	26		
					1/108	y(Transversal)					1.43	
							223	533	26	26		
					1/214	y(Transversal)					1.54	
							223	536	26	26		
					108/0	y(Transversal)					1.47	
							224	533	26	26		
					108/54	y(Transversal)					1.49	
							221	529	26	26		
					108/108	y(Transversal)					1.36	
							223	532	26	26		
					216/0	y(Transversal)					1.53	
							223	530	26	26		
				BPSK	108/54	y(Transversal)					1.5	
							222	529	26	26		
				16QAM	108/54	y(Transversal)					1.44	
							223	532	26	26		
				64QAM	108/54	y(Transversal)					1.4	
							223	529	26	26		
				256QAM	108/54	y(Transversal)					1.4	
							225	533	26	26		

Mode	Ch. Freq.	BW	Waceform	BW/ Modulation	RB Config.	Orientation	Primary	Secondary	Contiguous longitudinal	Contiguous Transverse	Freq. Response	
NR Band 25 ANT A AMR-WB Codec: 23.85 kbit/s	CH.376500 1882.5 MHz	35 MHz	CP-OFDM	256QAM	1/1	y(Transversal)					1.58	
							233	544	26	26		
		30 MHz			1/1	y(Transversal)					1.35	
							210	516	26	26		
		25 MHz			1/1	y(Transversal)					1.41	
							261	575	26	26		
		20 MHz			1/1	y(Transversal)					1.36	
							266	583	26	26		
		15 MHz			1/1	y(Transversal)					1.3	
							262	576	26	26		
		10 MHz			1/1	y(Transversal)					1.43	
							250	567	26	26		
		5 MHz			1/1	y(Transversal)					1.28	
							248	556	26	26		

Mode	Ch. Freq.	BW	Waceform	BW/ Modulation	RB Config.	Orientation	Primary	Secondary	Contiguous longitudinal	Contiguous Transverse	Freq. Response	
NR Band n25 ANT F AMR-WB Codec: 23.85 kbit/s	CH.376500 1882.5 MHz	40 MHz	CP-OFDM	256QAM	1/1	y(Transversal)					1.72	12
							188	530	26	26		
NR Band n7 ANT B AMR-WB Codec: 23.85 kbit/s	CH.507000 2535 MHz	40 MHz	CP-OFDM	256QAM	1/1	y(Transversal)					1.4	13
							231	542	26	26		
NR Band n7 ANT F AMR-WB Codec: 23.85 kbit/s	CH.507000 2535 MHz	40 MHz	CP-OFDM	256QAM	1/1	y(Transversal)					1.44	
							232	540	26	26		
NR Band n12 ANT A AMR-WB Codec: 23.85 kbit/s	CH.14500 707.5 MHz	15 MHz	CP-OFDM	256QAM	1/1	y(Transversal)					1.27	
							286	606	26	26		
NR Band n12 ANT E AMR-WB Codec: 23.85 kbit/s	CH.14500 707.5 MHz	15 MHz	CP-OFDM	256QAM	1/1	y(Transversal)					1.39	14
							283	603	26	26		
NR Band n26 ANT E AMR-WB Codec: 23.85 kbit/s	CH.166300 831.5 MHz	20 MHz	CP-OFDM	256QAM	1/1	y(Transversal)					1.5	15
							278	596	26	26		
NR Band n26 ANT A AMR-WB Codec: 23.85 kbit/s	CH.166300 831.5 MHz	20 MHz	CP-OFDM	256QAM	1/1	y(Transversal)					1.39	
							287	605	26	26		

Mode	Ch. Freq.	BW	Waceform	BW/ Modulation	RB Config.	Orientation	Primary	Secondary	Contiguous longitudinal	Contiguous Transverse	Freq. Response	
NR Band n30 ANT F AMR-WB Codec: 23.85 kbit/s	CH.462000 2310 MHz	10 MHz	CP-OFDM	256QAM	1/1	y(Transversal)					1.37	
							269	588	26	26		
NR Band n30 ANT A AMR-WB Codec: 23.85 kbit/s	CH.462000 2310 MHz	10 MHz	CP-OFDM	256QAM	1/1	y(Transversal)					1.41	16
							253	567	26	26		
NR Band n66 ANT A AMR-WB Codec: 23.85 kbit/s	CH.349000 1745 MHz	40 MHz	CP-OFDM	256QAM	1/1	y(Transversal)					1.63	
							255	573	26	26		
NR Band n66 ANT F AMR-WB Codec: 23.85 kbit/s	CH.349000 1745 MHz	40 MHz	CP-OFDM	256QAM	1/1	y(Transversal)					1.36	17
							224	537	26	26		
NR Band n70 ANT A AMR-WB Codec: 23.85 kbit/s	CH.340500 1702.5 MHz	15 MHz	CP-OFDM	256QAM	1/1	y(Transversal)					1.5	18
							237	551	26	26		
NR Band n70 ANT F AMR-WB Codec: 23.85 kbit/s	CH.340500 1702.5 MHz	15 MHz	CP-OFDM	256QAM	1/1	y(Transversal)					1.46	
							246	560	26	26		
NR Band n71 ANT A AMR-WB Codec: 23.85 kbit/s	CH.136100 680.5 MHz	20 MHz	CP-OFDM	256QAM	1/1	y(Transversal)					1.41	
							308	631	26	26		
NR Band n71 ANT E AMR-WB Codec: 23.85 kbit/s	CH.136100 680.5 MHz	20 MHz	CP-OFDM	256QAM	1/1	y(Transversal)					1.41	19
							292	612	26	26		

Air Interface Investigation(Continued)

LTE-TDD

Mode	Ch. Freq.	BW	BW/ Modulation	RB Config.	Orientation	Primary	Secondary	Contiguous longitudinal	Contiguous Transverse	Freq. Response	Plot No.
LTE Band 41 Voice EVS-WB Codec: 5.9 kbit/s ANT F	CH.40620 2593 MHz	20 MHz	QPSK	1/0						1.52	20
					y(Transversal)	79	383	20	26		
				1/49						1.93	
					y(Transversal)	121	429	20	26		
				1/99						2	
					y(Transversal)	164	481	23	26		
				50/0						2	
					y(Transversal)	99	387	20	26		
				50/25						2	
					y(Transversal)	89	394	20	26		
				50/49						1.27	
					y(Transversal)	96	396	20	26		
				100/0						1.56	
					y(Transversal)	112	407	20	26		
			16QAM	1/0						1.81	
					y(Transversal)	87	373	22	26		
			64QAM	1/0						2	
					y(Transversal)	85	360	21	26		
			256QAM	1/0						1.61	
					y(Transversal)	97	387	22	26		
		15 MHz	QPSK	1/0						2	
					y(Transversal)	99	381	21	26		
		10 MHz		1/0						2	
					y(Transversal)	112	401	20	26		
		5 MHz		1/0						2	
					y(Transversal)	98	399	20	26		
LTE Band 48 Voice EVS-WB Codec: 5.9 kbit/s ANT F	CH.55990 3625 MHz	20 MHz	QPSK	1/0						1.67	21
					y(Transversal)	105	414	22	26		
LTE Band 41 Voice EVS-WB Codec: 5.9 kbit/s ANT B	CH.40620 2593 MHz	20 MHz	QPSK	1/0						2	
					y(Transversal)	141	454	24	26		
LTE Band 41 Voice EVS-WB Codec: 5..9 kbit/s ANT F	CH.39750 2506 MHz	20 MHz	QPSK	1/0						2	
					y(Transversal)	86	357	21	26		
	CH.40185 2549.5 MHz									2	
					y(Transversal)	165	466	22	26		
	CH.41055 2636.5 MHz									1.42	
					y(Transversal)	143	449	21	26		
	CH.41490 2680 MHz									1.75	
					y(Transversal)	118	413	21	26		

NR-TDD RB/ Modulation configuration

Mode	Ch. Freq.	BW	Waceform	BW/ Modulation	RB Config.	Orientation	Primary	Secondary	Contiguous longitudinal	Contiguous Transverse	Freq. Response	Plot No.
NR Band 77 Voice EVS-WB Codec: 5.9 kbit/s ANT F	CH.656000 3840 MHz	100 MHz	CP-OFDM	QPSK	1/1	y(Transversal)					2	
							203	465	22	26		
					1/137	y(Transversal)					2	
							217	481	22	26		
					1/271	y(Transversal)					2	
							215	479	21	26		
					137/0	y(Transversal)					2	
							189	451	21	26		
					137/68	y(Transversal)					2	
							212	477	22	26		
					137/136	y(Transversal)					2	
							193	456	21	26		
					273/0	y(Transversal)					2	
							188	451	21	26		
				16QAM	273/0	y(Transversal)					2	
							187	447	21	26		
				64QAM	273/0	y(Transversal)					2	
							172	432	21	26		
				256QAM	273/0	y(Transversal)					2	
							176	436	21	26		
			DFTs-OFDM	QPSK	1/1	y(Transversal)					2	
							146	452	23	26		
					1/137	y(Transversal)					2	
							141	442	22	26		
					1/271	y(Transversal)					2	
							141	442	22	26		
					135/0	y(Transversal)					2	
							146	448	22	26		
					135/69	y(Transversal)					2	
							156	460	23	26		
					135/138	y(Transversal)					2	
							138	441	22	26		
					270/0	y(Transversal)					2	
							135	435	22	26		
				BPSK	270/0	y(Transversal)					2	
							121	420	21	26		
				16QAM	270/0	y(Transversal)					2	
							123	421	21	26		
				64QAM	270/0	y(Transversal)					2	
							114	411	21	26		
				256QAM	270/0	y(Transversal)					2	
							136	435	21	26		

Mode	Ch. Freq.	BW	Waceform	BW/ Modulation	RB Config.	Orientation	Primary	Secondary	Contiguous longitudinal	Contiguous Transverse	Freq. Response	Plot No.
NR Band 77 Voice EVS-WB Codec: 5.9 kbit/s ANT F	CH.656000 3840 MHz	90 MHz	DFTs-OFDM	64QAM	243/0	y(Transversal)					2	
							181	467	21	26		
		80 MHz			216/0	y(Transversal)					2	
							137	412	20	26		
		70 MHz			180/0	y(Transversal)					2	
							133	408	20	26		
		60 MHz			162/0	y(Transversal)					2	
							137	410	21	26		
		50 MHz			128/0	y(Transversal)					1.85	
							134	409	21	26		
		40 MHz			100/0	y(Transversal)					2	
							158	431	21	26		
		30 MHz			75/0	y(Transversal)					2	
							163	431	21	26		
		25 MHz			64/0	y(Transversal)					1.7	
							155	429	21	26		
		20 MHz			50/0	y(Transversal)					1.9	
							154	427	21	26		
		15 MHz			36/0	y(Transversal)					2	
							162	431	21	26		
		10 MHz			24/0	y(Transversal)					1.42	
							151	425	21	26		
NR Band 48 Voice EVS-WB Codec: 5.9 kbit/s ANT F	CH.641666 3624.99 MHz	40 MHz	DFTs-OFDM	64QAM	100/0	y(Transversal)					1.74	22
							91	347	20	26		
NR Band 41 Voice EVS-WB Codec: 5.9 kbit/s ANT F	CH.518598 2592.99 MHz	80 MHz	DFTs-OFDM	64QAM	270/0	y(Transversal)					2	23
							98	353	20	26		
NR Band 41 Voice EVS-WB Codec: 5.9 kbit/s ANT B	CH.518598 2592.99 MHz	80 MHz	DFTs-OFDM	64QAM	270/0	y(Transversal)					2	
							106	359	19	26		
NR Band 77 DoD Voice EVS-WB Codec: 5.9 kbit/s ANT F	CH.633334 3500.01 MHz	80 MHz	DFTs-OFDM	64QAM	270/0	y(Transversal)					1.65	24
							86	339	20	26		

12.4 VoWi-Fi Codec Investigation

An investigation between the various codec configurations (Low/High bit rates for Narrowband, Wideband) and specific parameters are documented (Primary Group, Secondary Group, longitudinal contiguous points, transverse row contiguous points, frequency response) to determine the worst-case bit rates for each voice service type. The table below compares the varying codec configurations. A codec investigation was performed for each Wi-Fi 2.4 GHz and 5 GHz.

The highlighted results below were determined to be the worst case codec configuration(s) for Wi-Fi 2.4 GHz and 5 GHz.

Codec Investigation								
Codec State	AMR-NB (kbit/s)			AMR-WB (kbit/s)			Orientation	Band/ Bandwidth/ Channel
	4.75	7.4	12.2	6.6	15.85	23.85		
Freq. Response(dB)	1.35	2	1.72	2	1.72	1.45	y (Transversal)	802.11b CH.6 2437 MHz DSSS 1 Mbps
Primary	203	219	221	190	194	195		
Secondary	468	482	483	485	487	487		
Contiguous Longitudinal	22	22	22	22	22	22		
Contiguous Transverse	26	26	26	26	26	26		

Codec Investigation											
Codec State	EVS-NB (kbit/s)			EVS-WB (kbit/s)			EVS-SWB (kbit/s)			Orientation	Band/ BandWidth/ Channel
	5.9	13.2	24.4	5.9	24.4	128	9.6	24.4	128		
Freq. Response(dB)	2	1.88	2	1.29	2	2	2	2	2	y (Transversal)	802.11b CH.6 2437 MHz DSSS 1 Mbps
Primary	199	249	272	187	171	180	222	220	269		
Secondary	516	517	542	516	515	513	509	507	571		
Contiguous Longitudinal	24	24	24	23	23	23	22	22	26		
Contiguous Transverse	26	26	26	26	26	26	26	26	26		

Codec Investigation								
Codec State	AMR-NB (kbit/s)			AMR-WB (kbit/s)			Orientation	Band/ Bandwidth/ Channel
	4.75	7.4	12.2	6.6	15.85	23.85		
Freq. Response(dB)	2	1.85	1.81	2	1.67	1.55	y (Transversal)	802.11a CH.40 5200 MHz BPSK 6 Mbps
Primary	242	243	236	204	208	209		
Secondary	519	512	507	516	514	513		
Contiguous Longitudinal	23	23	23	23	23	23		
Contiguous Transverse	26	26	26	26	26	26		

Codec Investigation											
Codec State	EVS-NB (kbit/s)			EVS-WB (kbit/s)			EVS-SWB (kbit/s)			Orientation	Band/ BandWidth/ Channel
	5.9	13.2	24.4	5.9	24.4	128	9.6	24.4	128		
Freq. Response(dB)	2	2	2	1.83	1.49	1.54	2	2	2	y (Transversal)	802.11a CH.40 5200 MHz BPSK 6 Mbps
Primary	197	250	244	171	208	209	216	213	219		
Secondary	513	520	514	514	511	513	508	505	510		
Contiguous Longitudinal	23	23	23	23	23	23	23	23	23		
Contiguous Transverse	26	26	26	26	26	26	26	26	26		

12.5 VoWi-Fi Antennas Investigation

EVS-WB 24.4 kbit/s was the worst case bit-rates for 802.11b, EVS-WB 5.9 kbit/s was the worst case bit-rates for 802.11a. The secondary antenna was investigated to determine which antennas yields a worse Primary Group. The worst case codec and bit-rate from MIMO was used to determine Antenna 1,2's exclusion. Since Antenna 1,2 yielded a better Primary Group than MIMO, all subsequent measurements were measured using MIMO.

2.4GHz Antenna Investigation					
Codec State	ANT1	ANT2	MIMO	Orientation	Band/ BandWidth/ Channel
	EVS-WB (kbit/s)				
	24.4				
Freq. Response(dB)	2	1.62	1.68	y (Transversal)	802.11b CH.6 2437 ㎒ DSSS 1 Mbps
Primary	171	225	164		
Secondary	515	540	447		
Contiguous Longitudinal	23	26	24		
Contiguous Transverse	26	26	26		

5GHz Antenna Investigation					
Codec State	ANT1	ANT2	MIMO	Orientation	Band/ BandWidth/ Channel
	EVS-WB (kbit/s)				
	5.9				
Freq. Response(dB)	1.83	1.7	1.16	y (Transversal)	802.11a CH.40 5200 ㎒ BPSK 6 Mbps
Primary	171	202	137		
Secondary	514	549	442		
Contiguous Longitudinal	23	25	23		
Contiguous Transverse	26	26	26		

12.6 VoWi-Fi Air Interface Investigation

Using the data from §12.4, further testing was performed on the remaining 802.11 modes. The objective of these measurements is to ensure that changing the modulation, bandwidth, and data rate, whilst using the worst case codec configuration measured in §12.4, yields no unexpected variations.

Moe	Ch. Freq.	BW	BW/ Modeulation	Orientation	Primary	Secondary	Contiguous longitudinal	Contiguous Transverse	Freq. Response	
802.11b Voice EVS-WB Codec: 24.4 kbit/s	CH.6 2437 MHz	20 MHz	DSSS 1 Mbps	y(Transversal)					1.68	
					164	447	24	26		
			CCK 5.5 Mbps	y(Transversal)					1.46	
					144	416	23	26		
			CCK 11 Mbps	y(Transversal)					1.55	
					141	397	23	26		
	CH.1 2412 MHz		DSSS 11 Mbps	y(Transversal)					1.57	
					127	383	24	26		
	CH.11 2462 MHz		DSSS 11 Mbps	y(Transversal)					1.63	25
					126	385	23	26		
802.11g Voice EVS-WB Codec: 24.4 kbit/s	CH.6 2437 MHz	20 MHz	64QAM 54 Mbps	y(Transversal)					1.57	
					241	552	26	26		
802.11n HT20 Voice EVS-WB Codec: 24.4 kbit/s	CH.6 2437 MHz	20 MHz	MCS 3 26 Mbps	y(Transversal)					1.62	
					241	547	26	26		
802.11ax HE20 Voice EVS-WB Codec: 24.4 kbit/s	CH.6 2437 MHz	20 MHz	MCS 0 8.6 Mbps	y(Transversal)					1.53	
					203	509	25	26		

VoWi-Fi Air Interface Investigation (Continued)

Mode	Ch. Freq.	BW	BW /Modulation	Orientation	Primary	Secondary	Contiguous longitudinal	Contiguous Transverse	Freq. Response	
802.11a Voice EVS-WB Codec: 5.9kbit/s	CH.40 5200 MHz	20 MHz	BPSK 6 Mbps	y(Transversal)					1.16	
					137	442	23	26		
			QPSK 18 Mbps	y(Transversal)					1.76	
					144	464	22	26		
			64QAM 54 Mbps	y(Transversal)					1.79	
					168	495	23	26		
802.11n HT20 Voice EVS-WB Codec: 5.9kbit/s	CH.40 5200 MHz	20 MHz	MCS 0 6.5 Mbps	y(Transversal)					1.79	
					134	444	21	26		
			MCS 3 26 Mbps	y(Transversal)					1.76	
					132	438	22	26		
			MCS 7 65 Mbps	y(Transversal)					1.2	
					183	492	22	26		
802.11n HT40 Voice EVS-WB Codec: 5.9kbit/s	CH.38 5190 MHz	40 MHz	MCS 0 13.5 Mbps	y(Transversal)					1.44	
					206	593	26	26		
			MCS 3 54 Mbps	y(Transversal)					1.16	
					147	490	23	26		
			MCS 7 135 Mbps	y(Transversal)					1.9	
					183	535	25	26		
802.11ac VHT20 Voice EVS-WB Codec: 5.9kbit/s	CH.40 5200 MHz	20 MHz	MCS 0 6.5 Mbps	y(Transversal)					1.64	26
					119	432	22	26		
			MCS 4 39 Mbps	y(Transversal)					1.39	
					127	435	22	26		
			MCS 8 78 Mbps	y(Transversal)					1.67	
					148	475	22	26		
802.11ac VHT40 Voice EVS-WB Codec: 5.9kbit/s	CH.38 5190 MHz	40 MHz	MCS 0 13.5 Mbps	y(Transversal)					2	
					129	442	21	26		
			MCS 4 81 Mbps	y(Transversal)					1.56	
					152	484	22	26		
			MCS 9 180 Mbps	y(Transversal)					1.3	
					175	534	26	26		
802.11ac VHT80 Voice EVS-WB Codec: 5.9kbit/s	CH.42 5210 MHz	80 MHz	MCS 0 29.3 Mbps	y(Transversal)					1.56	
					145	463	22	26		
			MCS 4 175.5Mbps	y(Transversal)					1.68	
					198	562	26	26		
			MCS 9 390 Mbps	y(Transversal)					1.84	
					194	560	26	26		

Mode	Ch. Freq.	BW	BW /Modulation	Orientation	Primary	Secondary	Contiguous longitudinal	Contiguous Transverse	Freq. Response	
802.11ac VHT160 Voice EVS-WB Codec: 5.9kbit/s	CH.50 5250 MHz	160 MHz	MCS 0 58.5 Mbps						2	
				y(Transversal)	158	482	23	26		
			MCS 4 351 Mbps						1.97	
				y(Transversal)	193	557	26	26		
			MCS 9 780 Mbps						1.78	
				y(Transversal)	195	553	26	26		
802.11ax HE20 Voice EVS-WB Codec: 5.9kbit/s	CH.40 5200 MHz	20 MHz	MCS 0 8.6 Mbps						1.27	
				y(Transversal)	144	484	23	26		
			MCS 6 77.4 Mbps						1.8	
				y(Transversal)	182	554	26	26		
			MCS 11 143.4 Mbps						2	
				y(Transversal)	185	581	26	26		
802.11ax HE40 Voice EVS-WB Codec: 5.9kbit/s	CH.38 5190 MHz	40 MHz	MCS 0 17.2 Mbps						1.71	
				y(Transversal)	192	530	24	26		
			MCS 6 154.9Mbps						2	
				y(Transversal)	162	504	23	26		
			MCS 11 286.8Mbps						2	
				y(Transversal)	167	530	24	26		
802.11ax HE80 Voice EVS-WB Codec: 5.9kbit/s	CH.42 5210 MHz	80 MHz	MCS 0 36.05 Mbps						2	
				y(Transversal)	179	516	24	26		
			MCS 6 324.3Mbps						1.68	
				y(Transversal)	227	602	26	26		
			MCS 11 600.5Mbps						1.69	
				y(Transversal)	179	533	25	26		
802.11ax HE160 Voice EVS-WB Codec: 5.9kbit/s	CH.50 5250 MHz	160 MHz	MCS 0 68 Mbps						2	
				y(Transversal)	160	518	24	26		
			MCS 6 613 Mbps						1.89	
				y(Transversal)	181	553	26	26		
			MCS 11 1134 Mbps						1.16	
				y(Transversal)	169	540	26	26		
802.11ac VHT20 EVS-WB Codec: 5.9kbit/s	CH.60 5300 MHz	20 MHz	MCS 0 6.5 Mbps						1.82	
				y(Transversal)	129	446	22	26		
	CH.120 5600 MHz	20 MHz	MCS 0 6.5 Mbps						2	
				y(Transversal)	136	451	22	26		
	CH.157 5785 MHz	20 MHz	MCS 0 6.5 Mbps						1.58	
				y(Transversal)	159	443	22	26		
	CH.173 5785 MHz	20 MHz	MCS 0 6.5 Mbps						2	
				y(Transversal)	136	450	22	26		
802.11ac VHT20 EVS-WB Codec: 5.9kbit/s	CH.36 5180 MHz	20 MHz	MCS 0 6.5 Mbps						1.65	27
				y(Transversal)	125	437	21	26		
	CH.48 5240 MHz								1.82	28
				y(Transversal)	125	431	21	26		

12.7 OTT Codec Investigation

The DUT's nested OTT application supports range of codec bit rate 6 – 75 kbit/s, thus an investigation between the various codec configurations (6/75 as Low/High bit rates) and specific parameters are documented (Primary Group, Secondary Group, longitudinal contiguous points, transverse row contiguous points, frequency response) to determine the worst-case bit rates for each service type.

The table below compares the varying codec configurations.

Codec Investigation					
Codec State	codec bit rate (kbit/s)			Orientation	Band/ BandWidth/ Channel
	6	40	75		
Freq. Response (dB)	1.52	1.87	1.97	y(Transversal)	GSM 850 EDGE 2 slot Ch.251 848.8 MHz ANT E
Primary	43	53	85		
Secondary	259	272	360		
Contiguous Longitudinal	17	17	20		
Contiguous Transverse	26	26	26		
Freq. Response (dB)	1.78	1.95	1.91	y(Transversal)	WCDMA Band II HSUPA subtest 1 CH.9400 1852.4 ㎒ ANT A
Primary	255	259	261		
Secondary	600	601	604		
Contiguous Longitudinal	26	26	26		
Contiguous Transverse	26	26	26		
Freq. Response (dB)	1.37	1.77	1.98	y(Transversal)	LTE Band 30 10 ㎒ 64QAM 1RB 0offset CH.27710 2310 ㎒ ANT A
Primary	222	239	206		
Secondary	559	575	539		
Contiguous Longitudinal	24	25	23		
Contiguous Transverse	26	26	26		
Freq. Response (dB)	1.7	1.71	1.91	y(Transversal)	LTE Band 41 20 ㎒ QPSK 1B 0offset CH.40620 2593 ㎒ ANT F
Primary	89	94	90		
Secondary	355	373	350		
Contiguous Longitudinal	20	22	20		
Contiguous Transverse	26	26	26		

Codec Investigation					
Codec State	codec bit rate (kbit/s)			Orientation	Band/ BandWidth/ Channel
	6	40	75		
Freq. Response (dB)	1.97	1.82	2	y(Transversal)	802.11b 2.4GHz 11Mbps CH.1 2462 ㎒
Primary	141	164	125		
Secondary	448	473	393		
Contiguous Longitudinal	19	21	19		
Contiguous Transverse	26	26	26		
Freq. Response (dB)	1.13	1.89	1.97	y(Transversal)	802.11ac20 5GHz MCS0 CH40 5200 ㎒
Primary	217	225	221		
Secondary	564	566	562		
Contiguous Longitudinal	26	26	26		
Contiguous Transverse	26	26	26		
Freq. Response (dB)	1.06	1.76	1.85	y(Transversal)	NR Band 25 40 ㎒ CP 256QAM 1RB 1offset CH.376500 1882.5 ㎒ ANT F
Primary	206	200	205		
Secondary	540	538	538		
Contiguous Longitudinal	24	24	24		
Contiguous Transverse	26	26	26		
Freq. Response (dB)	1.80	1.73	1.63	y(Transversal)	NR Band 77 DoD 100 ㎒ DFT-s 64QAM 270RB 0offset CH.633334 3500.01 ㎒ ANT F
Primary	149	137	141		
Secondary	462	448	452		
Contiguous Longitudinal	21	20	20		
Contiguous Transverse	26	26	26		

12.7 OTT Air Interface Investigation

Mode	Ch. Freq.	BW	BW/ Mode	RB Config.	Orientation	Primary	Secondary	Contiguous longitudinal	Contiguous Transverse	Freq. Response	Plot No.
GSM850 EDGE 2 slots Meet Codec: 6 kbit/s ANT E	CH.251 848.8 MHz				y(Transversal)					1.52	
						43	259	17	26		
GSM850 EDGE 2 slots Meet Codec: 6 kbit/s ANT A	CH.251 848.8 MHz				y(Transversal)					1.56	29
						30	210	16	26		
GSM1900 EDGE 2 slots Meet Codec: 6 kbit/s ANT A	CH.810 1909.8 MHz				y(Transversal)					1.2	30
						76	338	20	26		
UMTS Band II HSUPA subtest1 Meet Codec: 6 kbit/s ANT A	CH.9400 1880.0 MHz				y(Transversal)					1.78	31
						255	600	26	26		
UMTS Band IV HSUPA subtest1 Meet Codec: 6 kbit/s ANT A	CH.1412 1732.4 MHz				y(Transversal)					1.91	32
						259	603	26	26		
UMTS Band V HSUPA subtest1 Meet Codec: 6 kbit/s ANT A	CH.4183 836.6 MHz				y(Transversal)					1.2	33
						244	604	26	26		
UMTS Band V HSUPA subtest1 Meet Codec: 6 kbit/s ANT E	CH.4183 836.6				y(Transversal)					1.75	
						250	596	26	26		
LTE Band 7 Google Meet Codec: 75 kbit/s ANT F	CH.21100 2535 MHz	10 MHz	64QAM	1/0	y(Transversal)					1.96	34
						220	552	24	26		
LTE Band 12 Google Meet Codec: 75 kbit/s ANT E	CH.23095 707.5 MHz	10 MHz	64QAM	1/0	y(Transversal)					1.97	35
						240	579	26	26		
LTE Band 13 Google Meet Codec: 75 kbit/s ANT E	CH.23230 782.0 MHz	10 MHz	64QAM	1/0	y(Transversal)					2	36
						232	567	25	26		
LTE Band 14 Google Meet Codec: 75 kbit/s ANT E	CH.23330 793 MHz	10 MHz	64QAM	1/0	y(Transversal)					1.93	
						245	587	26	26		
LTE Band 25 Google Meet Codec: 75 kbit/s ANT F	CH.26365 1882.5 MHz	10 MHz	64QAM	1/0	y(Transversal)					1.99	37
						237	576	26	26		
LTE Band 26 Google Meet Codec: 75 kbit/s ANT A	CH.26865 831.5 MHz	10 MHz	64QAM	1/0	y(Transversal)					1.95	38
						237	577	26	26		
LTE Band 30 Google Meet Codec: 75 kbit/s ANT A	CH.27710 2310 MHz	10 MHz	64QAM	1/0	y(Transversal)					1.98	39
						206	539	23	26		
LTE Band 66 Google Meet Codec: 75 kbit/s ANT F	CH.132322 1745 MHz	10 MHz	64QAM	1/0	y(Transversal)					1.9	40
						227	560	25	26		
LTE Band 71 Google Meet Codec: 75 kbit/s ANT E	CH.133297 680.5 MHz	10 MHz	64QAM	1/0	y(Transversal)					2	41
						245	590	26	26		

Mode	Ch. Freq.	BW	BW/ Mode	RB Config.	Orientation	Primary	Secondary	Contiguous longitudinal	Contiguous Transverse	Freq. Response	Plot No.
LTE Band 7 Google Meet Codec: 75 kbit/s ANT B	CH.21100 2535 MHz	10 MHz	64QAM	1/0	y(Transversal)					1.85	
						230	568	25	26		
LTE Band 12 Google Meet Codec: 75 kbit/s ANT A	CH.23095 707.5 MHz	10 MHz	64QAM	1/0	y(Transversal)					1.82	
						243	587	26	26		
LTE Band 13 Google Meet Codec: 75 kbit/s ANT A	CH.23230 782.0 MHz	10 MHz	64QAM	1/0	y(Transversal)					2	
						233	570	25	26		
LTE Band 14 Google Meet Codec: 75 kbit/s ANT A	CH.23330 793 MHz	10 MHz	64QAM	1/0	y(Transversal)					1.92	42
						237	575	25	26		
LTE Band 25 Google Meet Codec: 75 kbit/s ANT A	CH.26365 1882.5 MHz	10 MHz	64QAM	1/0	y(Transversal)					1.95	
						317	672	26	26		
LTE Band 26 Google Meet Codec: 75 kbit/s ANT E	CH.26865 831.5 MHz	10 MHz	64QAM	1/0	y(Transversal)					1.83	
						300	650	26	26		
LTE Band 30 Google Meet Codec: 75 kbit/s ANT F	CH.27710 2310 MHz	10 MHz	64QAM	1/0	y(Transversal)					2	
						303	655	26	26		
LTE Band 66 Google Meet Codec: 75 kbit/s ANT A	CH.132322 1745 MHz	10 MHz	64QAM	1/0	y(Transversal)					1.99	
						314	668	26	26		
LTE Band 71 Google Meet Codec: 75 kbit/s ANT A	CH.133297 680.5 MHz	10 MHz	64QAM	1/0	y(Transversal)					1.91	
						260	595	25	26		
LTE Band 41 Google Meet Codec: 6 kbit/s ANT F	CH.40620 2593 MHz	20 MHz	QPSK	1/0	y(Transversal)					1.7	
						89	355	20	26		
LTE Band 41 Google Meet Codec: 6 kbit/s ANT B	CH.40620 2593 MHz	20 MHz	QPSK	1/0	y(Transversal)					1.37	
						171	466	21	26		
LTE Band 48 Google Meet Codec: 6 kbit/s ANT F	CH.55990 3625 MHz	20 MHz	QPSK	1/0	y(Transversal)					1.5	
						135	419	21	26		

Mode:	Ch./ Freq.	BW/ Data Rate	BW/ Modulation	RB Config.	Orientation	Primary	Secondary	Contiguous longitudinal	Contiguous Transverse	Freq. Response	Plot No.
Wi-Fi 2.4 GHz 802.11b Google Meet Codec: 75 kbit/s	CH.11 2462 MHz	20 MHz	11 Mbps		y(Transversal)					2	43
						125	393	19	26		
U-NII 5.2 GHz 802.11a Google Meet Codec: 6 kbit/s	CH.40 5200 MHz	20 MHz	6 Mbps		y(Transversal)					1.13	
						217	564	26	26		
U-NII 5.3 802.11a Google Meet Codec: 6 kbit/s	CH.60 5600 MHz	20 MHz	6 Mbps		y(Transversal)					1.02	
						221	563	26	26		
U-NII 5.6 GHz 802.11a Google Meet Codec: 6 kbit/s	CH.120 5600 MHz	20 MHz	6 Mbps		y(Transversal)					1.71	
						222	566	26	26		
U-NII 5.8 GHz 802.11a Google Meet Codec: 6 kbit/s	CH.157 5785 MHz	20 MHz	6 Mbps		y(Transversal)					1.99	
						210	558	26	26		
U-NII 5.8 GHz 802.11a Google Meet Codec: 6 kbit/s	CH.173 5785 MHz	20 MHz	6 Mbps		y(Transversal)					1.39	44
						185	476	23	26		

Mode	Ch. Freq.	BW	Waceform	BW/ Modulation	RB Config.	Orientation	Primary	Secondary	Contiguous longitudinal	Contiguous Transverse	Freq. Response	Plot No.
NR Band n25 Google Meet Codec: 40 kbit/s ANT A	CH.376500 1882.5 MHz	40 MHz	CP-OFDM	256QAM	1/1	y(Transversal)					1.94	
							229	549	24	26		
NR Band n25 Google Meet Codec: 40 kbit/s ANT F	CH.376500 1882.5 MHz	40 MHz	CP-OFDM	256QAM	1/1	y(Transversal)					1.76	45
							200	538	24	26		
NR Band n7 Google Meet Codec: 40 kbit/s ANT B	CH.50700 2535 MHz	40 MHz	CP-OFDM	256QAM	1/1	y(Transversal)					1.67	
							218	533	23	26		
NR Band n7 Google Meet Codec: 40 kbit/s ANT F	CH.50700 2535 MHz	40 MHz	CP-OFDM	256QAM	1/1	y(Transversal)					1.82	46
							208	543	24	26		
NR Band n12 Google Meet Codec: 40 kbit/s ANT A	CH.142500 707.5 MHz	15 MHz	CP-OFDM	256QAM	1/1	y(Transversal)					1.98	47
							243	566	26	26		
NR Band n12 Google Meet Codec: 40 kbit/s ANT E	CH.142500 707.5 MHz	15 MHz	CP-OFDM	256QAM	1/1	y(Transversal)					1.78	
							259	596	26	26		
NR Band n26 Google Meet Codec: 40 kbit/s ANT E	CH.166300 831.5 MHz	20 MHz	CP-OFDM	256QAM	1/1	y(Transversal)					1.96	48
							242	572	26	26		
NR Band n26 Google Meet Codec: 40 kbit/s ANT A	CH.166300 831.5 MHz	20 MHz	CP-OFDM	256QAM	1/26 1/1	y(Transversal)					1.88	
							293	637	26	26		
NR Band n30 Google Meet Codec: 40 kbit/s ANT F	CH.462000 2310 MHz	10 MHz	CP-OFDM	256QAM	1/26 1/1	y(Transversal)					1.82	49
							241	566	25	26		
NR Band n30 Google Meet Codec: 40 kbit/s ANT A	CH.462000 2310 MHz	10 MHz	CP-OFDM	256QAM	1/26 1/1	y(Transversal)					1.72	
							241	575	25	26		
NR Band n66 Google Meet Codec: 40 kbit/s ANT A	CH.349000 1745 MHz	40 MHz	CP-OFDM	256QAM	1/26 1/1	y(Transversal)					1.84	50
							224	543	24	26		
NR Band n66 Google Meet Codec: 40 kbit/s ANT F	CH.349000 1745 MHz	40 MHz	CP-OFDM	256QAM	1/1 1/1	y(Transversal)					1.93	
							240	579	25	26		
NR Band n70 Google Meet Codec: 40 kbit/s ANT A	CH. 340500 1702.5 MHz	15 MHz	CP-OFDM	256QAM	1/1 1/1	y(Transversal)					1.89	
							232	571	24	26		
NR Band n70 Google Meet Codec: 40 kbit/s ANT F	CH.340500 1702.5 MHz	15 MHz	CP-OFDM	256QAM	1/1 1/1	y(Transversal)					1.83	51
							212	543	23	26		
NR Band n71 Google Meet Codec: 40 kbit/s ANT A	CH.136100 680.5 MHz	20 MHz	CP-OFDM	256QAM	1/1 1/1	y(Transversal)					1.74	52
							247	582	26	26		
NR Band n71 Google Meet Codec: 40 kbit/s ANT E	CH.136100 680.5 MHz	20 MHz	CP-OFDM	256QAM	1/0	y(Transversal)					1.87	
							260	606	26	26		

Mode	Ch. Freq.	BW	Waceform	BW/ Modulation	RB Config.	Orientation	Primary	Secondary	Contiguous longitudinal	Contiguous Transverse	Freq. Response	Plot No.
NR Band n41 Google Meet Codec: 40 kbit/s ANT F	CH. 518598 2592.99 MHz	100 MHz	DFTs	64QAM	270/0	y(Transversal)					1.97	
							122	388	20	26		
NR Band n41 Google Meet Codec: 40 kbit/s ANT B	CH. 518598 2592.99 MHz	100 MHz	DFTs	64QAM	270/0	y(Transversal)					1.93	53
							118	379	19	26		
NR Band n48 Google Meet Codec: 6 kbit/s ANT F	CH. 656000 3840 MHz	40 MHz	DFTs	QPSK	100/0	y(Transversal)					1.91	54
							96	362	20	26		
NR Band n77 Google Meet Codec: 6 kbit/s ANT F	CH. 656000 3840 MHz	100 MHz	DFTs	64QAM	270/0	y(Transversal)					1.75	55
							95	391	20	26		
NR Band n77 DoD Google Meet Codec: 40 kbit/s ANT F	CH. 653334 3500.01 MHz	100 MHz	DFTs	64QAM	270/0	y(Transversal)					1.73	
							137	448	20	26		
GSM850 EDGE 2 slots Meet Codec: 6 kbit/s ANT A	CH. 128 824.2 MHz					y(Transversal)					1..54	
							46	295	17	26		
GSM850 EDGE 2 slots Meet Codec: 6 kbit/s ANT A	CH. 190 836.6 MHz					y(Transversal)					1.42	
							33	232	16	26		

Attachment 1. HAC T-COIL Test Plots

Attachment 2. HAC T-Coil Probe Certificates

Calibration Laboratory of
Schmid & Partner
Engineering AG
Zeughausstrasse 43, 8004 Zurich, Switzerland

S Schweizerischer Kalibrierdienst
C Service suisse d'étalonnage
Servizio svizzero di taratura
S Swiss Calibration Service

Accredited by the Swiss Accreditation Service (SAS)
The Swiss Accreditation Service is one of the signatories to the EA Multilateral Agreement for the recognition of calibration certificates

Accreditation No.: SCS 0108

Client **HCT**
Gyeonggi-do, Republic of Korea

Certificate No. **AM1DV3-3049_May23**

CALIBRATION CERTIFICATE

Object	AM1DV3 - SN: 3049
Calibration procedure(s)	QA CAL-24.v4 Calibration procedure for AM1D magnetic field probes and TMFS in the audio range
Calibration date:	May 23, 2023

This calibration certificate documents the traceability to national standards, which realize the physical units of measurements (SI). The measurements and the uncertainties with confidence probability are given on the following pages and are part of the certificate.

All calibrations have been conducted in the closed laboratory facility: environment temperature (22 ± 3)°C and humidity < 70%.

Calibration Equipment used (M&TE critical for calibration)

Primary Standards	ID #	Cal Date (Certificate No.)	Scheduled Calibration
Keithley Multimeter Type 2001	SN: 0810278	29-Aug-22 (No. 34389)	Aug-23
Reference Probe AM1DV2	SN: 1008	20-Dec-22 (No. AM1DV2-1008_Dec22)	Dec-23
DAE4	SN: 781	03-Jan-23 (No. DAE4-781_Jan23)	Jan-24

Secondary Standards	ID #	Check Date (in house)	Scheduled Check
AMCC	SN: 1050	01-Oct-13 (in house check Oct-20)	Oct-23
AMMI Audio Measuring Instrument	SN: 1062	26-Sep-12 (in house check Oct-20)	Oct-23

	Name	Function	Signature
Calibrated by:	Leif Klysner	Laboratory Technician	
Approved by:	Sven Kühn	Technical Manager	

Issued: May 23, 2023

This calibration certificate shall not be reproduced except in full without written approval of the laboratory.

결	담 당 자	확 인 자
재		
처리/담당	DL / 박경훈	CJ / 지준호
일 자	2023 / 06.02	2023 / 06.02

Certificate No: AM1DV3-3049_May23 Page 1 of 3

References

[1] ANSI-C63.19-2007
American National Standard for Methods of Measurement of Compatibility between Wireless Communications Devices and Hearing Aids.
[2] ANSI-C63.19-2019 (ANSI-C63.19-2011)
American National Standard, Methods of Measurement of Compatibility between Wireless Communications Devices and Hearing Aids.
[3] DASY System Handbook

Description of the AM1D probe

The AM1D Audio Magnetic Field Probe is a fully shielded magnetic field probe for the frequency range from 100 Hz to 20 kHz. The pickup coil is compliant with the dimensional requirements of [1+2]. The probe includes a symmetric low noise amplifier for the signal available at the shielded 3 pin connector at the side. Power is supplied via the same connector (phantom power supply) and monitored via the LED near the connector. The 7 pin connector at the end of the probe does not carry any signals, but determines the angle of the sensor when mounted on the DAE. The probe supports mechanical detection of the surface.
The single sensor in the probe is arranged in a tilt angle allowing measurement of 3 orthogonal field components when rotating the probe by 120° around its axis. It is aligned with the perpendicular component of the field, if the probe axis is tilted nominally 35.3° above the measurement plane, using the connector rotation and sensor angle stated below.
The probe is fully RF shielded when operated with the matching signal cable (shielded) and allows measurement of audio magnetic fields in the close vicinity of RF emitting wireless devices according to [1+2] without additional shielding.

Handling of the item

The probe is manufactured from stainless steel. In order to maintain the performance and calibration of the probe, it must not be opened. The probe is designed for operation in air and shall not be exposed to humidity or liquids. For proper operation of the surface detection and emergency stop functions in a DASY system, the probe must be operated with the special probe cup provided (larger diameter).

Methods Applied and Interpretation of Parameters

- *Coordinate System:* The AM1D probe is mounted in the DASY system for operation with a HAC Test Arch phantom with AMCC Helmholtz calibration coil according to [3], with the tip pointing to "southwest" orientation.
- *Functional Test:* The functional test preceding calibration includes test of Noise level RF immunity (1kHz AM modulated signal). The shield of the probe cable must be well connected. Frequency response verification from 100 Hz to 10 kHz.
- *Connector Rotation:* The connector at the end of the probe does not carry any signals and is used for fixation to the DAE only. The probe is operated in the center of the AMCC Helmholtz coil using a 1 kHz magnetic field signal. Its angle is determined from the two minima at nominally +120° and –120° rotation, so the sensor in the tip of the probe is aligned to the vertical plane in z-direction, corresponding to the field maximum in the AMCC Helmholtz calibration coil.
- *Sensor Angle:* The sensor tilting in the vertical plane from the ideal vertical direction is determined from the two minima at nominally +120° and –120°. DASY system uses this angle to align the sensor for radial measurements to the x and y axis in the horizontal plane.
- *Sensitivity:* With the probe sensor aligned to the z-field in the AMCC, the output of the probe is compared to the magnetic field in the AMCC at 1 kHz. The field in the AMCC Helmholtz coil is given by the geometry and the current through the coil, which is monitored on the precision shunt resistor of the coil.

AM1D probe identification and configuration data

Item	**AM1DV3** Audio Magnetic 1D Field Probe
Type No	SP AM1 001 BA
Serial No	**3049**

Overall length	296 mm
Tip diameter	6.0 mm (at the tip)
Sensor offset	3.0 mm (centre of sensor from tip)
Internal Amplifier	20 dB

Manufacturer / Origin	Schmid & Partner Engineering AG, Zurich, Switzerland

Calibration data

Connector rotation angle	(in DASY system)	**279.2 °**	+/- 3.6 ° (k=2)
Sensor angle	(in DASY system)	**-0.45 °**	+/- 0.5 ° (k=2)
Sensitivity at 1 kHz	(in DASY system)	**0.00745 V/(A/m)**	+/- 2.2 % (k=2)

The reported uncertainty of measurement is stated as the standard uncertainty of measurement multiplied by the coverage factor k=2, which for a normal distribution corresponds to a coverage probability of approximately 95%.

Calibration Laboratory of
Schmid & Partner
Engineering AG
Zeughausstrasse 43, 8004 Zurich, Switzerland

S Schweizerischer Kalibrierdienst
C Service suisse d'étalonnage
S Servizio svizzero di taratura
Swiss Calibration Service

Accredited by the Swiss Accreditation Service (SAS)
The Swiss Accreditation Service is one of the signatories to the EA Multilateral Agreement for the recognition of calibration certificates

Accreditation No.: **SCS 0108**

Client **HCT**
Gyeonggi-do, Republic of Korea

Certificate No. **AM1DV3-3153_Apr23**

CALIBRATION CERTIFICATE

Object	AM1DV3 - SN: 3153
Calibration procedure(s)	QA CAL-24.v4 Calibration procedure for AM1D magnetic field probes and TMFS in the audio range
Calibration date:	April 19, 2023

This calibration certificate documents the traceability to national standards, which realize the physical units of measurements (SI). The measurements and the uncertainties with confidence probability are given on the following pages and are part of the certificate.

All calibrations have been conducted in the closed laboratory facility: environment temperature (22 ± 3)°C and humidity < 70%.

Calibration Equipment used (M&TE critical for calibration)

Primary Standards	ID #	Cal Date (Certificate No.)	Scheduled Calibration
Keithley Multimeter Type 2001	SN: 0810278	29-Aug-22 (No. 34389)	Aug-23
Reference Probe AM1DV2	SN: 1008	20-Dec-22 (No. AM1DV2-1008_Dec22)	Dec-23
DAE4	SN: 781	03-Jan-23 (No. DAE4-781_Jan23)	Jan-24

Secondary Standards	ID #	Check Date (in house)	Scheduled Check
AMCC	SN: 1050	01-Oct-13 (in house check Oct-20)	Oct-23
AMMI Audio Measuring Instrument	SN: 1062	26-Sep-12 (in house check Oct-20)	Oct-23

	Name	Function	Signature
Calibrated by:	Leif Klysner	Laboratory Technician	
Approved by:	Sven Kühn	Technical Manager	

Issued: April 24, 2023

This calibration certificate shall not be reproduced except in full without written approval of the laboratory.

결	작 성 자	확 인 자
재		
직위/성명	DL / 한성훈	LT / 허준형
일 자	2023 / 05.09	2023 / 05.09

References

[1] ANSI-C63.19-2007
American National Standard for Methods of Measurement of Compatibility between Wireless Communications Devices and Hearing Aids.

[2] ANSI-C63.19-2019 (ANSI-C63.19-2011)
American National Standard, Methods of Measurement of Compatibility between Wireless Communications Devices and Hearing Aids.

[3] DASY System Handbook

Description of the AM1D probe

The AM1D Audio Magnetic Field Probe is a fully shielded magnetic field probe for the frequency range from 100 Hz to 20 kHz. The pickup coil is compliant with the dimensional requirements of [1+2]. The probe includes a symmetric low noise amplifier for the signal available at the shielded 3 pin connector at the side. Power is supplied via the same connector (phantom power supply) and monitored via the LED near the connector. The 7 pin connector at the end of the probe does not carry any signals, but determines the angle of the sensor when mounted on the DAE. The probe supports mechanical detection of the surface.
The single sensor in the probe is arranged in a tilt angle allowing measurement of 3 orthogonal field components when rotating the probe by 120° around its axis. It is aligned with the perpendicular component of the field, if the probe axis is tilted nominally 35.3° above the measurement plane, using the connector rotation and sensor angle stated below.
The probe is fully RF shielded when operated with the matching signal cable (shielded) and allows measurement of audio magnetic fields in the close vicinity of RF emitting wireless devices according to [1+2] without additional shielding.

Handling of the item

The probe is manufactured from stainless steel. In order to maintain the performance and calibration of the probe, it must not be opened. The probe is designed for operation in air and shall not be exposed to humidity or liquids. For proper operation of the surface detection and emergency stop functions in a DASY system, the probe must be operated with the special probe cup provided (larger diameter).

Methods Applied and Interpretation of Parameters

- *Coordinate System:* The AM1D probe is mounted in the DASY system for operation with a HAC Test Arch phantom with AMCC Helmholtz calibration coil according to [3], with the tip pointing to "southwest" orientation.
- *Functional Test:* The functional test preceding calibration includes test of Noise level RF immunity (1kHz AM modulated signal). The shield of the probe cable must be well connected. Frequency response verification from 100 Hz to 10 kHz.
- *Connector Rotation:* The connector at the end of the probe does not carry any signals and is used for fixation to the DAE only. The probe is operated in the center of the AMCC Helmholtz coil using a 1 kHz magnetic field signal. Its angle is determined from the two minima at nominally +120° and –120° rotation, so the sensor in the tip of the probe is aligned to the vertical plane in z-direction, corresponding to the field maximum in the AMCC Helmholtz calibration coil.
- *Sensor Angle:* The sensor tilting in the vertical plane from the ideal vertical direction is determined from the two minima at nominally +120° and –120°. DASY system uses this angle to align the sensor for radial measurements to the x and y axis in the horizontal plane.
- *Sensitivity:* With the probe sensor aligned to the z-field in the AMCC, the output of the probe is compared to the magnetic field in the AMCC at 1 kHz. The field in the AMCC Helmholtz coil is given by the geometry and the current through the coil, which is monitored on the precision shunt resistor of the coil.

AM1D probe identification and configuration data

Item	**AM1DV3** Audio Magnetic 1D Field Probe
Type No	SP AM1 001 BA
Serial No	**3153**

Overall length	296 mm
Tip diameter	6.0 mm (at the tip)
Sensor offset	3.0 mm (centre of sensor from tip)
Internal Amplifier	20 dB

Manufacturer / Origin	Schmid & Partner Engineering AG, Zurich, Switzerland

Calibration data

Connector rotation angle	(in DASY system)	**236.8 °**	+/- 3.6 ° (k=2)
Sensor angle	(in DASY system)	**0.70 °**	+/- 0.5 ° (k=2)
Sensitivity at 1 kHz	(in DASY system)	**0.00736 V/(A/m)**	+/- 2.2 % (k=2)

The reported uncertainty of measurement is stated as the standard uncertainty of measurement multiplied by the coverage factor k=2, which for a normal distribution corresponds to a coverage probability of approximately 95%.