Element Materials Technology
(formerly PCTEST)
7185 Oakland Mills Road, Columbia, MD 21046 USA
Tel. +1.410.290.6652 / Fax +1.410.290.6654
http://www.element.com

RF EXPOSURE PART 2 TEST REPORT

Applicant Name:
Samsung Electronics Co., Ltd.
129, Samsung-ro, Maetan dong,
Yeongtong-gu, Suwon-si
Gyeonggi-do, 16677, Korea

Date of Testing:
09/12/2025 – 10/17/2025
Test Site/Location:
Element, Columbia, MD, USA
Document Serial No.:
1M2508250079-03.A3L

FCC ID: **A3LSMS948B**

APPLICANT: **SAMSUNG ELECTRONICS CO., LTD.**

DUT Type:	Portable Handset
Application Type:	Certification
FCC Rule Part(s):	CFR §2.1093
Model(s):	SM-S948B
Additional Model(s):	SM-S948B/DS
Device Serial Numbers:	Pre-Production Samples [1275M, 0331M]

I attest to the accuracy of data. All measurements reported herein were performed by me or were made under my supervision and are correct to the best of my knowledge and belief. I assume full responsibility for the completeness of these measurements and vouch for the qualifications of all persons taking them. Test results reported herein relate only to the item(s) tested.

RJ Ortanez
Executive Vice President

ACCREDITED
CERT #2041.01

© 2025 Element

Unless otherwise specified, no part of this report may be reproduced or utilized in any part, form or by any means, electronic or mechanical, including photocopying and microfilm, without permission in writing from Element. If you have any questions or have an enquiry about obtaining additional rights to this report or assembly of contents thereof, please contact CT.INFO@ELEMENT.COM.

T A B L E O F C O N T E N T S

1 DEVICE UNDER TEST 3

2 RF EXPOSURE LIMITS 5

3 SMART TRANSMIT VALIDATION TEST CASES 7

4 SUB-6 VALIDATION TEST PROCEDURES 10

5 TEST CONFIGURATIONS 26

6 CONDUCTED POWER MEASUREMENT FOR SUB-6 SMART TRANSMIT FEATURE VALIDATION ... 31

7 EQUIPMENT LIST 57

8 CONCLUSION 58

9 REFERENCES 59

APPENDIX A: TEST SETUP PHOTOGRAPHS

APPENDIX B: TEST SEQUENCES

APPENDIX C: TEST PROCEDURES FOR SUB6 NR + NR RADIO

© 2025 Element

Unless otherwise specified, no part of this report may be reproduced or utilized in any part, form or by any means, electronic or mechanical, including photocopying and microfilm, without permission in writing from Element. If you have any questions or have an enquiry about obtaining additional rights to this report or assembly of contents thereof, please contact CT.INFO@ELEMENT.COM.

1 DEVICE UNDER TEST

1.1 Device Overview

Band & Mode	Operating Modes	Tx Frequency
GSM/GPRS/EDGE 850	Voice/Data	824.20 - 848.80 MHz
GSM/GPRS/EDGE 1900	Voice/Data	1850.20 - 1909.80 MHz
UMTS 850	Voice/Data	826.40 - 846.60 MHz
UMTS 1750	Voice/Data	1712.4 - 1752.6 MHz
UMTS 1900	Voice/Data	1852.4 - 1907.6 MHz
LTE Band 12	Voice/Data	699.7 - 715.3 MHz
LTE Band 17	Voice/Data	706.5 - 713.5 MHz
LTE Band 13	Voice/Data	779.5 - 784.5 MHz
LTE Band 26	Voice/Data	814.7 - 848.3 MHz
LTE Band 5	Voice/Data	824.7 - 848.3 MHz
LTE Band 66	Voice/Data	1710.7 - 1779.3 MHz
LTE Band 4	Voice/Data	1710.7 - 1754.3 MHz
LTE Band 25	Voice/Data	1850.7 - 1914.3 MHz
LTE Band 2	Voice/Data	1850.7 - 1909.3 MHz
LTE Band 41	Voice/Data	2498.5 - 2687.5 MHz
NR Band n5	Voice/Data	826.5 - 846.5 MHz
NR Band n66	Voice/Data	1712.5 - 1777.5 MHz
NR Band n25	Voice/Data	1852.5 - 1912.5 MHz
NR Band n2	Voice/Data	1852.5 - 1907.5 MHz
NR Band n41	Voice/Data	2501.01 - 2685 MHz
NR Band n77	Voice/Data	3455.01 - 3544.98 MHz; 3705 - 3975 MHz
2.4 GHz WIFI	Voice/Data	2412 - 2462 MHz
5 GHz WIFI	Voice/Data	U-NII-1: 5180 - 5240 MHz U-NII-2A: 5260 - 5320 MHz U-NII-2C: 5500 - 5720 MHz U-NII-3: 5745 - 5825 MHz U-NII-4: 5845 - 5885 MHz
6 GHz WIFI	Voice/Data	U-NII-5: 5935 - 6415 MHz U-NII-6: 6435 - 6515 MHz U-NII-7: 6535 - 6875 MHz U-NII-8: 6895 - 7115 MHz
2.4 GHz Bluetooth	Data	2402 - 2480 MHz

© 2025 Element

Unless otherwise specified, no part of this report may be reproduced or utilized in any part, form or by any means, electronic or mechanical, including photocopying and microfilm, without permission in writing from Element. If you have any questions or have an enquiry about obtaining additional rights to this report or assembly of contents thereof, please contact CT.INFO@ELEMENT.COM.

1.2 Time-Averaging Algorithm for RF Exposure Compliance

This device is enabled with Qualcomm® Smart Transmit feature. This feature performs time averaging algorithm in real time to control and manage transmitting power and ensure the time-averaged RF exposure is in compliance with FCC requirements all the time. DUT contains embedded file system (EFS) version 24 configured for the second generation (GEN2) for Sub6.

The Smart Transmit algorithm maintains the time-averaged transmit power, in turn, time-averaged RF exposure of SAR_design_target below the predefined time-averaged power limit (i.e., Plimit for sub-6 radio), for each characterized technology and band.

Smart Transmit allows the device to transmit at higher power instantaneously, as high as P_{max}, when needed, but enforces power limiting to maintain time-averaged transmit power to P_{limit} for frequencies < 6 GHz.

Note that the device uncertainty for this DUT is 1.0 dB for sub-6GHz. Multi-Tx factor is set to 1.27 per manufacturer.

The following input parameters are key parameters that are required for functionality of the Smart Transmit feature. These parameters cannot be accessed by the end user, because at the factory they are entered through the embedded file system (EFS) entries by the OEM.

- *Tx_power_at_SAR_design_target (Plimit in dBm) for Tx transmitting frequency < 6 GHz*

  The maximum time-average transmit power, in dBm, at which this radio configuration (i.e., band and technology) reaches the *SAR_design_target*. This *SAR_design_target* is pre-determined for the specific device and it shall be less than regulatory SAR limit after accounting for all design related tolerances. The time-averaged SAR is assessed against this *SAR_design_target* in real time to determine the compliance. The Plimit could vary with technology, band, antenna and DSI (device state index), therefore it has the unique value for each technology, band, antenna and DSI.

This purpose of the Part 2 report is to demonstrate the DUT complies with FCC RF exposure requirement under Tx varying transmission scenarios, thereby validity of Qualcomm® Smart Transmit feature implementation in this device. It serves to compliment the Part 0 and Part 1 Test Reports to justify compliance per FCC.

1.3 Part 2 Test Case Reduction for Multiple Filings

Per FCC guidance, the number of test cases for Part 2 evaluation can be reduced in the case of multiple filings using the same chipset after full part 2 testing on the first filing. While the same chipset and Smart Transmit algorithm are used in this model, DUT with the final SW was tested for power measurements to verify the integration. The SAR, as described in Section 3, measurements are excluded per FCC guidance.

FCC ID	Chipset	EFS Version	Initial Filing: FCC ID/Chipset	Power Meas.	RF Exposure Meas.	Rationale
A3LSMS948U	SM8850	24	A3LSMS948U, SM8850, EFS v24	Full Test	Full Test	Different chipset family and/or different EFS version
A3LSMS948B	SM8850	24		Reduced Test	Skipped	Same chipset family and same EFS version

1.4 Bibliography

Report Type	Report Serial Number
RF Exposure Part 1 Test Report	1M2508250079-01.A3L
RF Exposure Part 0 Test Report	1M2508250079-02.A3L
RF Exposure Compliance Summary	1M2508250079-04.A3L

© 2025 Element

Unless otherwise specified, no part of this report may be reproduced or utilized in any part, form or by any means, electronic or mechanical, including photocopying and microfilm, without permission in writing from Element. If you have any questions or have an enquiry about obtaining additional rights to this report or assembly of contents thereof, please contact CT.INFO@ELEMENT.COM.

2 RF EXPOSURE LIMITS

2.1 Uncontrolled Environment

UNCONTROLLED ENVIRONMENTS are defined as locations where there is the exposure of individuals who have no knowledge or control of their exposure. The general population/uncontrolled exposure limits are applicable to situations in which the general public may be exposed or in which persons who are exposed as a consequence of their employment may not be made fully aware of the potential for exposure or cannot exercise control over their exposure. Members of the general public would come under this category when exposure is not employment-related; for example, in the case of a wireless transmitter that exposes persons in its vicinity.

2.2 Controlled Environment

CONTROLLED ENVIRONMENTS are defined as locations where there is exposure that may be incurred by persons who are aware of the potential for exposure, (i.e. as a result of employment or occupation). In general, occupational/controlled exposure limits are applicable to situations in which persons are exposed as a consequence of their employment, who have been made fully aware of the potential for exposure and can exercise control over their exposure. This exposure category is also applicable when the exposure is of a transient nature due to incidental passage through a location where the exposure levels may be higher than the general population/uncontrolled limits, but the exposed person is fully aware of the potential for exposure and can exercise control over his or her exposure by leaving the area or by some other appropriate means.

2.3 RF Exposure Limits for Frequencies Below 6 GHz

Table 2-1
SAR Human Exposure Specified in ANSI/IEEE C95.1-1992 and Health Canada Safety Code 6

HUMAN EXPOSURE LIMITS		
	UNCONTROLLED ENVIRONMENT *General Population* (W/kg) or (mW/g)	CONTROLLED ENVIRONMENT *Occupational* (W/kg) or (mW/g)
Peak Spatial Average SAR Head	1.6	8.0
Whole Body SAR	0.08	0.4
Peak Spatial Average SAR Hands, Feet, Ankle, Wrists, etc.	4.0	20

1. The Spatial Peak value of the SAR averaged over any 1 gram of tissue (defined as a tissue volume in the shape of a cube) and over the appropriate averaging time.
2. The Spatial Average value of the SAR averaged over the whole body.
3. The Spatial Peak value of the SAR averaged over any 10 grams of tissue (defined as a tissue volume in the shape of a cube) and over the appropriate averaging time.

© 2025 Element

Unless otherwise specified, no part of this report may be reproduced or utilized in any part, form or by any means, electronic or mechanical, including photocopying and microfilm, without permission in writing from Element. If you have any questions or have an enquiry about obtaining additional rights to this report or assembly of contents thereof, please contact CT.INFO@ELEMENT.COM.

2.4 RF Exposure Limits for Frequencies Above 6 GHz

Per §1.1310 (d)(3), the MPE limits are applied for frequencies above 6 GHz. Power Density is expressed in units of W/m^2 or mW/cm^2.

Peak Spatially Averaged Power Density was evaluated over a circular area of 4 cm^2 per interim FCC Guidance for near-field power density evaluations per October 2018 TCB Workshop notes.

Table 2-2
Human Exposure Limits Specified in FCC 47 CFR §1.1310

Human Exposure to Radiofrequency (RF) Radiation Limits		
Frequency Range [MHz]	**Power Density** [mW/cm^2]	**Averaging Time** [Minutes]
(A) Limits for Occupational / Controlled Environments		
1,500 – 100,000	5.0	6
(B) Limits for General Population / Uncontrolled Environments		
1,500 – 100,000	1.0	30

Note: 1.0 mW/cm^2 is 10 W/m^2

2.5 Time Averaging Windows for FCC Compliance

Per October 2018 TCB Workshop Notes, the below time-averaging windows can be used for assessing time-averaged exposures for devices that are capable of actively monitoring and adjusting power output over time to comply with exposure limits.

Interim Guidance	Frequency (GHz)	Maximum Averaging Time (sec)
SAR	< 3	100
	3 – 6	60
MPE	6 - 10	30
	10 - 16	14
	16 – 24	8
	24 – 42	4
	42 – 95	2

© 2025 Element

Unless otherwise specified, no part of this report may be reproduced or utilized in any part, form or by any means, electronic or mechanical, including photocopying and microfilm, without permission in writing from Element. If you have any questions or have an enquiry about obtaining additional rights to this report or assembly of contents thereof, please contact CT.INFO@ELEMENT.COM.

3 SMART TRANSMIT VALIDATION TEST CASES

To validate the time averaging feature and demonstrate the compliance in Tx varying transmission conditions, the following transmission scenarios are covered in the Part 2 test:

1. During a time-varying Tx power transmission: To prove that the Smart Transmit feature accounts for Tx power variations in time accurately.
2. During a call disconnect and re-establish scenario: To prove that the Smart Transmit feature accounts for history of past Tx power transmissions accurately.
3. During a technology/band handover: To prove that the Smart Transmit feature functions correctly during transitions in technology/band.
4. During a DSI (Device State Index) change: To prove that the Smart Transmit feature functions correctly during transition from one device state (DSI) to another.
5. During an antenna switch: To prove that the Smart Transmit feature functions correctly during transitions in antenna (such as AsDiv scenario).
6. During time-window switch: To prove that the Smart Transmit feature correctly handles the transition from one time window to another specified by FCC and maintains the normalized time-averaged RF exposure to always be less than normalized FCC limit of 1.0.
7. SAR exposure switching between two active radios (radio1 and radio2): To prove that the Smart Transmit feature functions correctly and ensures total RF exposure compliance when exposure varies among SAR_radio1 only, SAR_radio1 + SAR_radio2, and SAR_radio2 only scenarios.
8. Exposure category switch: To prove that the Time-Averaged Specific Absorption Rate (TAS) feature functions correctly when the EUT exposure category changes.
9. System level compliance continuity: Within terrestrial networks (WWAN, WLAN, BT, etc.): To demonstrate the time averaged RF exposure compliance continuity during technology transition in both single-radio and multi-radio transmission scenarios and under both modes (i.e., ON and airplane) of WWAN modem.

   NOTE: Technology in this test refers to WWAN, WLAN and/or Bluetooth

   NOTE: For WWAN, theoretically, either sub6 radio or mmW radio can be selected for this system level compliance continuity test as Smart Transmit internal operation is identical. Thus, the test with either WWAN sub6 or mmW radio is sufficient. However, since FCC time average window for WWAN mmW NR is 4 seconds, to be more practical and feasible in actual measurement, sub6 WWAN radio is recommended to be selected for this test.

   NOTE: BT allowed maximum power will be at one of the 3 levels populated in EFS depending on transmission scenarios, and BT's Pmax allocated by Smart Transmit is always ⩽ Plimit. Therefore, for 10.b), either WWAN or WLAN can be selected as a terrestrial network for demonstrating the compliance continuity during bi-directional transitions between non-terrestrial networks and terrestrial networks. Tests with one pair of terrestrial and non-terrestrial radios is sufficient as the continuity among all terrestrial technologies is covered and validated.

As described in Part 0 report, the RF exposure is proportional to the Tx power for a SAR-characterized wireless device. Thus, feature validation in Part 2 can be effectively performed through conducted (for f < 6GHz) power measurement. Therefore, the compliance demonstration under dynamic transmission conditions and feature validation are done in conducted power measurement setup for transmission scenario 1 through 9.

© 2025 Element

Unless otherwise specified, no part of this report may be reproduced or utilized in any part, form or by any means, electronic or mechanical, including photocopying and microfilm, without permission in writing from Element. If you have any questions or have an enquiry about obtaining additional rights to this report or assembly of contents thereof, please contact CT.INFO@ELEMENT.COM.

To add confidence in the feature validation, the time-averaged SAR measurements are also performed but only performed for transmission scenario 1 to avoid the complexity in SAR measurement (such as, for scenario 3 requiring change in SAR probe calibration file to accommodate different bands and/or tissue simulating liquid).

Conducted power and Radiated power measurements:

Demonstrate the total RF exposure averaged over FCC defined time windows does not exceed FCC's SAR and PD limits, through time-averaged power measurements

- Measure conducted Tx power (for *f* < 6GHz) versus time.
- Convert it into RF exposure and divide by respective FCC limits to get normalized exposure versus time.
- Perform running time-averaging over FCC defined time windows.
- Demonstrate that the total normalized time-averaged RF exposure is always less than 1.0 for all transmission scenarios.
- Mathematical expression:

For < 6 GHz transmission only:

$$1g_or_10gSAR(t) = \frac{conducted_Tx_power(t)}{conducted_Tx_power_P_{limit}} * 1g_or_10gSAR_P_{limit} \quad (1a)$$

$$\frac{\frac{1}{T_{SAR}}\int_{t-T_{SAR}}^{t} 1g_or_10gSAR(t)dt}{FCC\ SAR\ limit} \leq 1 \quad (1b)$$

where, $conducted_Tx_power(t)$, $conducted_Tx_power_P_{limit}$, and $1g_or_10gSAR_P_{limit}$ correspond to the measured instantaneous conducted Tx power, measured conducted Tx power at P_{limit}, and measured *1gSAR or 10gSAR* values at P_{limit} corresponding to sub-6 transmission. P_{limit} is the parameter pre-defined in Part 0 and loaded via Embedded File System (EFS) onto the EUT. T_{SAR} is the FCC defined time window for sub-6 radio.

RF Exposure measurement:

Demonstrate the total RF exposure averaged over FCC defined time windows does not exceed FCC's SAR limit through time-averaged SAR measurements. Note as mentioned earlier, this measurement is performed for transmission scenario 1 only.For sub-6 transmission only, measure instantaneous SAR versus time; for LTE+sub6 NR transmission, request low power (or all-down bits) on LTE so that measured SAR predominantly corresponds to sub6 NR.

- Mathematical expression:

For sub-6 transmission only:

$$1g_or_10gSAR(t) = \frac{pointSAR(t)}{pointSAR_P_{limit}} * 1g_or_10gSAR(t)_P_{limit} \quad (2a)$$

$$\frac{\frac{1}{T_{SAR}}\int_{t-T_{SAR}}^{t} 1g_or_10gSAR(t)dt}{FCC\ SAR\ limit} \leq 1 \quad (2b)$$

For sub-6 +*f* ≥ *6GHz* transmission:

© 2025 Element

Unless otherwise specified, no part of this report may be reproduced or utilized in any part, form or by any means, electronic or mechanical, including photocopying and microfilm, without permission in writing from Element. If you have any questions or have an enquiry about obtaining additional rights to this report or assembly of contents thereof, please contact CT.INFO@ELEMENT.COM.

where, $pointSAR(t)$, $pointSAR_P_{limit}$, and $1g_or_10gSAR_P_{limit}$ correspond to the measured instantaneous point SAR, measured point SAR at P_{limit}, and measured *1gSAR* or 10gSAR values at P_{limit} corresponding to sub-6 transmission.

- Note: cDASY6 measurement system by Schmid & Partner Engineering AG (SPEAG) of Zurich, Switzerland measures relative E-field, and provides ratio of $\frac{[pointE(t)]^2}{[pointE_input.power.limit]^2}$ versus time.

Since it is possible to use two different units (i.e., two different serial # devices) for Part1 and Part2 testing, 1g_or_10gSAR_Plimit in equations (1a) and (2a) to 1g_or_10gSAR value corresponding to measured Plimit of Part 2 device (i.e., conducted_Tx_power_Plimit). This can be calculated from reported SAR in Part 1 report as shown below:

$$1g_or_10gSAR_P_{limit} = \frac{Part2_conducted_Tx_power_P_{limit}}{Part1_reported_P_{limit}} * Part1_reported_1gSAR \quad (3a)$$

where Part1_reported_1gSAR" corresponds to measured SAR at Plimit value in the numerator, and Part1_reported_Plimit in the denominator corresponds to measured Tx power at Plimit. In other words, both numerator and denominator correspond to measured levels in Part1 report.

© 2025 Element

Unless otherwise specified, no part of this report may be reproduced or utilized in any part, form or by any means, electronic or mechanical, including photocopying and microfilm, without permission in writing from Element. If you have any questions or have an enquiry about obtaining additional rights to this report or assembly of contents thereof, please contact CT.INFO@ELEMENT.COM.

4 SUB-6 VALIDATION TEST PROCEDURES

This chapter provides the test plan and test procedure for validating Qualcomm Smart Transmit feature for sub-6 transmission. The 100 seconds time window for WWAN operating f < 3GHz is used as an example to detail the test procedures in this chapter. The same test plan and test procedures described in this chapter apply to 60 seconds time window for WWAN operating f ≥ 3GHz. A 30 seconds time window is used for all WLAN bands (e.g. 2.4GHz, 5GHz, and 6GHz).

4.1 Test Sequence Determination for Validation

Following the FCC recommendation, two test sequences having time-variation in Tx power are predefined for sub-6 (f < 6 GHz) validation:

- Test sequence 1: request DUT's Tx power to be at maximum power, measured P_{max}†, for 80s, then requesting for half of the maximum power, i.e., measured $P_{max}/2$, for the rest of the time.
- Test sequence 2: request DUT's Tx power to vary with time. This sequence is generated relative to measured P_{max}, measured P_{limit} and calculated $P_{reserve}$ (= measured P_{limit} in dBm - *reserve_power_margin* in dB) of DUT based on measured P_{limit}.

The details for generating these two test sequences is described and listed in Appendix E.

NOTE: For test sequence generation, "measured P_{limit}" and "measured P_{max}" are used instead of the "P_{limit}" specified in EFS entry and "P_{max}" specified for the device, because the Smart Transmit feature operates against the actual power level of the "P_{limit}" that was calibrated for the DUT. The "measured P_{limit}" accurately reflects what the feature is referencing to, therefore, it should be used during feature validation testing. The RF tune up and device-to-device variation are already considered in Part 0 report prior to determining P_{limit}.

4.2 Test Configuration Selection Criteria for Validating Smart Transmit Feature

For validating the Smart Transmit feature, this section provides the general guidance to select test cases.

4.2.1 Time-Varying Tx Power Transmission

The Smart Transmit time averaging feature operation is independent of bands, modes, and channels for a given technology. Hence, validation of Smart Transmit in one band/mode/channel per technology is sufficient. Two bands per technology are proposed and selected for this testing to provide high confidence in this validation.

Note this test is designed for single radio transmission scenario. If UE supports sub6 NR in both non-standalone (NSA) and standalone (SA) modes, then validation in time-varying Tx power transmission scenario described in this section needs to be performed in SA mode. Otherwise, it needs to be performed in NSA mode with LTE anchor set to low power. The choice between SA and NSA mode needs to also take into account the selection criteria described below. In general, one mode out of the two modes (NSA or SA) is sufficient for this test.

The criteria for the selection are based on the P_{limit} values determined in Part 0 report. Select two bands* in each supported technology that correspond to least** and highest*** P_{limit} values that are less than P_{max} for validating Smart Transmit. Note:

1. P_{max} refers to maximum Tx power configured for this device in this technology/band (not rated P_{max}). This P_{max} definition applies throughout this Part 2 report.

© 2025 Element
REV 1.0
04/06/2020
Unless otherwise specified, no part of this report may be reproduced or utilized in any part, form or by any means, electronic or mechanical, including photocopying and microfilm, without permission in writing from Element. If you have any questions or have an enquiry about obtaining additional rights to this report or assembly of contents thereof, please contact CT.INFO@ELEMENT.COM.

2. If $P_{limit} > P_{max}$, the validation test with time-varying test sequences is not needed as no power enforcement will be required in this condition.

* If one P_{limit} level applies to all the bands within a technology, then only one band needs to be tested. In this case, within the bands having the same P_{limit}, the radio configuration (e.g., # of RBs, channel#) and device position that correspond to the highest *measured* 1gSAR at P_{limit} shown in Part 1 report is selected.

** In case of multiple bands having the same least P_{limit} within the technology, then select the band having the highest *measured* 1gSAR at P_{limit}.

*** The band having a higher P_{limit} needs to be properly selected so that the power limiting enforced by Smart Transmit can be validated using the pre-defined test sequences. If the highest P_{limit} in a technology is too high where the power limiting enforcement is not needed when testing with the pre-defined test sequences, then the next highest level is checked. This process is continued within the technology until the second band for validation testing is determined.

4.2.2 Change In Call

The criteria to select a test configuration for call-drop measurement is:

- Select technology/band with least P_{limit} among all supported technologies/bands, and select the radio configuration (e.g., # of RBs, channel#) in this technology/band that corresponds to the highest *measured* 1gSAR at P_{limit} listed in Part 1 report.
- In case of multiple bands having same least P_{limit}, then select one band/radio configuration for this test.

This test is performed with the DUT's Tx power requested to be at maximum power, the above band selection will result in Tx power enforcement (i.e., DUT forced to have Tx power at $P_{reserve}$) for longest duration in one FCC defined time window. The call change (call drop/reestablish) is performed during the Tx power enforcement duration (i.e., during the time when DUT is forced to have Tx power at $P_{reserve}$). One test is sufficient as the feature operation is independent of technology and band.

4.2.3 Change In Technology/Band

The selection criteria for this measurement is, for a given antenna, to have DUT switch from a technology/band with lowest P_{limit} within the technology group (in case of multiple bands having the same P_{limit}, then select the band with highest *measured* 1gSAR at P_{limit}) to a technology/band with highest P_{limit} within the technology group, in case of multiple bands having the same P_{limit}, then select the band with lowest *measured* 1gSAR at P_{limit} in Part 1 report, or vice versa.

This test is performed with the DUT's Tx power requested to be at maximum power, the technology/band switch is performed during Tx power enforcement duration (i.e., during the time when DUT is forced to have Tx power at $P_{reserve}$).

© 2025 Element

Unless otherwise specified, no part of this report may be reproduced or utilized in any part, form or by any means, electronic or mechanical, including photocopying and microfilm, without permission in writing from Element. If you have any questions or have an enquiry about obtaining additional rights to this report or assembly of contents thereof, please contact CT.INFO@ELEMENT.COM.

4.2.4 Change In Antenna

The criteria to select a test configuration for antenna switch measurement is:

- Whenever possible and supported by the DUT, first select antenna switch configuration within the same technology/band (i.e., same technology and band combination).
- Then, select any technology/band that supports multiple Tx antennas, and has the highest difference in P_{limit} among all supported antennas.
- In case of multiple bands having same difference in P_{limit} among supported antennas, then select the band having the highest *measured* 1gSAR at P_{limit} in Part 1 report.

This test is performed with the DUT's Tx power requested to be at maximum power in selected technology/band, and antenna change is conducted during Tx power enforcement duration (i.e., during the time when DUT is forced to have Tx power at $P_{reserve}$).

4.2.5 Change In DSI

The criteria to select a test configuration for DSI change test is

- Select a technology/band having the $P_{limit} < P_{max}$ within any technology and DSI group, and for the same technology/band having a different P_{limit} in any other DSI group. Note that the selected DSI transition need to be supported by the device.
- The antennas corresponding to the selected DSIs should be in the same antenna group if EUT is configured with GEN2_SUB6 or GEN2_SUB6_MMW, and selected DSIs should be under the same exposure category (i.e., both selected DSIs are either under head exposure category or under non-head exposure category.

This test is performed with the DUT's Tx power requested to be at maximum power in selected technology/band, and DSI change is conducted during Tx power enforcement duration (i.e., during the time when DUT is forced to have Tx power at $P_{reserve}$).

4.2.6 Change In Time Window

FCC specifies different time window for time averaging based on operation frequency. The criteria to select a test configuration for validating Smart Transmit feature and demonstrating the compliance during the change in time window is

- Select any technology/band that has operation frequency classified in one time window defined by FCC (such as 100-seconds time window), and its corresponding P_{limit} is less than P_{max} if possible.
- Select the 2nd technology/band that has operation frequency classified in a different time window defined by FCC (such as 60-seconds time window), and its corresponding P_{limit} is less than P_{max} if possible.
- Note it is preferred both P_{limit} values of two selected technology/band less than corresponding P_{max}, but if not possible, at least one of technologies/bands has its P_{limit} less than P_{max}.

This test is performed with the EUT's Tx power requested to be at maximum power in selected technology/band. Test for one pair of time windows selected is sufficient as the feature operation is the same.

© 2025 Element

Unless otherwise specified, no part of this report may be reproduced or utilized in any part, form or by any means, electronic or mechanical, including photocopying and microfilm, without permission in writing from Element. If you have any questions or have an enquiry about obtaining additional rights to this report or assembly of contents thereof, please contact CT.INFO@ELEMENT.COM.

4.2.7 SAR Exposure Switching

If supported, the test configuration for SAR exposure switching should cover

1. SAR exposure switch when two active radios are in the same time window
2. SAR exposure switch when two active radios are in different time windows. One test with two active radios in any two different time windows is sufficient as Smart Transmit operation is the same for RF exposure switch in any combination of two different time windows.
    a. For device supporting LTE + Sub6 NR, then, EN-DC is required to be selected for this test. So, other sub6 WWAN + sub6 WWAN simultaneous transmission configurations (e.g., LTE interband ULCA or FR1 + FR1) are optional.

The Smart Transmit time averaging operation is independent of the source of SAR exposure (for example, LTE vs. Sub6 NR) and ensures total time-averaged RF exposure compliance. Hence, validation of Smart Transmit in any one simultaneous SAR transmission scenario (i.e., one combination for LTE + Sub6 NR transmission) is sufficient, where the SAR exposure varies among SAR_{radio1} only, SAR_{radio1} + SAR_{radio2}, and SAR_{radio2} only scenarios.

The criteria to select a test configuration for validating Smart Transmit feature during SAR exposure switching scenarios is

- Select any two < 6GHz technologies/bands that the EUT supports simultaneous transmission (for example, LTE+Sub6 NR).
- Among all supported simultaneous transmission configurations, the selection order is
    1. select one configuration where both P_{limit} of radio1 and radio2 is less than their corresponding P_{max}, preferably, with different P_{limits}. If this configuration is not available, then,
    2. select one configuration that has P_{limit} less than its P_{max} for at least one radio. If this can not be found, then,
    3. select one configuration that has P_{limit} of radio1 and radio2 greater than P_{max} but with least ($P_{limit} - P_{max}$) delta.

Test for one simultaneous transmission scenario is sufficient as the feature operation is the same.

4.2.8 Exposure Category Switch

The criteria to select a test configuration for exposure category switch measurement is:

1. If the device's intended exposure mode is configured for time averaged exposure mode operation, then:
    - If $P_{limit} < P_{max}$ for at least one radio out of all supported technology/band/antenna/DSI, then:
        (a) Out of all head exposure DSIs, select a technology/band/antenna/DSI having the least P_{limit} (< P_{max}), furthermore, having the largest difference between P_{max} and P_{limit} (P_{limit} < P_{max}) should be considered in the selection. Then, select a second DSI in the non- head exposure category DSI that has the least P_{limit} among all the non-head DSIs for the same technology/band/antenna. This technology/band/antenna and selected DSIs are used for head to

© 2025 Element

Unless otherwise specified, no part of this report may be reproduced or utilized in any part, form or by any means, electronic or mechanical, including photocopying and microfilm, without permission in writing from Element. If you have any questions or have an enquiry about obtaining additional rights to this report or assembly of contents thereof, please contact CT.INFO@ELEMENT.COM.

non-head to head exposure switch test. If the *Plimit* > *Pmax* for all supported technology/band/antenna/DSI in head exposure category, then this test is not required.

(b) Similarly, out of all non-head exposure DSIs, select a technology/band/antenna/DSI having the least *Plimit* (< *Pmax*), furthermore, having the largest difference between *Pmax* and *Plimit* (*Plimit* < *Pmax*) should be considered in the selection. Then, select a second DSI in the head exposure category DSI that has the least Plimit among all the head DSIs for the same technology/band/antenna. This technology/band/antenna and selected DSIs are used for non-head to head to non-head exposure switch test. If the Plimit > Pmax for all supported technology/band/antenna/DSI in non-head exposure category, then this test is not required.

□ If *Plimit* > *Pmax* for all supported technology/band/antenna/DSIs for both head and non-head DSI categories, then:

c) select a supported sub6 simultaneous transmission scenario (like LTE + FR1 NSA, or LTE interband ULCA, or FR1 interband NR-DC, etc.) in head DSI that has Plimit < Pmax +10*log(N) for all radios of selected technology(s)/band(s)/antenna(s), where N is the number of active radios in selected sub6 simultaneous transmission scenario.

Note that the antennas determined for the selected radios of simultaneous transmission scenario should be in the same antenna group if EUT is configured with GEN2_SUB6 or GEN2_SUB6_MMW. Then, select a second DSI in the non-head exposure category that has the lowest Plimit among all the non-head DSIs for all the radios of the selected technology(s)/band(s)/antenna(s) simultaneous transmission scenario. This selected technology(s)/band(s)/antenna(s) and selected DSIs are used for head to non-head to head exposure switch test. If the head DSI has Plimit > Pmax +10*log(N) for all radios supported in sub6 simultaneous transmission scenarios, then this test is not required.

d) select a supported sub6 simultaneous transmission scenario (like LTE + FR1 NSA, or LTE interband ULCA, or FR1 interband NR-DC, etc.) in non-head DSI that has Plimit < Pmax +10*log(N) for all radios of the selected technology(s)/band(s)/antenna(s), where N is the number of active radios in selected sub6 simultaneous transmission scenario. Note that the antennas determined for the selected radios of simultaneous transmission scenario should be in the same antenna group if EUT is configured with GEN2_SUB6 or GEN2_SUB6_MMW. Then, select a second DSI in the head exposure category that has the lowest Plimit among all the head DSIs for all the radios of the selected technology(s)/band(s)/antenna(s) simultaneous transmission scenario. This selected technology(s)/band(s)/antenna(s) and selected DSIs are used for non-head to head to non-head exposure switch test. If the non-head DSI has Plimit > Pmax +10*log(N) for all radios supported in sub6 simultaneous transmission scenarios, then this test is not required.

□ Use the highest measured 1g_or_10g SAR at Plimit (Plimit < Pmax) shown in Part 1 report for the selected tech/band/antenna/DSI out of all radio configurations and device positions in Equation (3a), (4a), (5a) and (6a) to calculate time-varying SAR. However, in the case of Plimit > Pmax, the SAR measured in Part 1 report for the corresponding radio configuration selected and tested in Part 2 should be applied in Equation (3a), (4a), (5a) and (6a).

2. If the device's intended exposure mode is configured for peak exposure mode operation, then:

a) Select a supported sub6 simultaneous transmission scenario (like LTE + FR1 NSA, or LTE interband ULCA, or FR1 interband NR-DC, etc.) in head DSI that has Plimit < Pmax +10*log(N) for all radios of selected technology(s)/band(s)/antenna(s), where N is the number of active

© 2025 Element
REV 1.0
04/06/2020
Unless otherwise specified, no part of this report may be reproduced or utilized in any part, form or by any means, electronic or mechanical, including photocopying and microfilm, without permission in writing from Element. If you have any questions or have an enquiry about obtaining additional rights to this report or assembly of contents thereof, please contact CT.INFO@ELEMENT.COM.

radios in selected sub6 simultaneous transmission scenario. Note that the antennas determined for the selected radios of simultaneous transmission scenario should be in the same antenna group if EUT is configured with GEN2_SUB6 or GEN2_SUB6_MMW. Then, select a second DSI in the non-head exposure category that has the lowest Plimit among all the non-head DSIs for all the radios of the selected technology(s)/band(s)/antenna(s) simultaneous transmission scenario. This selected technology(s)/band(s)/antenna(s) and selected DSIs are used for head to non-head to head exposure switch test. If the head DSI has Plimit > Pmax +10*log(N) for all radios supported in sub6 simultaneous transmission scenarios, then this test is not required.

b) Select a supported sub6 simultaneous transmission scenario (like LTE + FR1 NSA, or LTE interband ULCA, or FR1 interband NR-DC, etc.) in non-head DSI that has Plimit < Pmax +10*log(N) for all radios of the selected technology(s)/band(s)/antenna(s), where N is the number of active radios in selected sub6 simultaneous transmission scenario. Note that the antennas determined for the selected radios of simultaneous transmission scenario should be in the same antenna group if EUT is configured with GEN2_SUB6 or GEN2_SUB6_MMW. Then, select a second DSI in the head exposure category that has the lowest Plimit among all the head DSIs for all the radios of the selected technology(s)/band(s)/antenna(s) simultaneous transmission scenario. This selected technology(s)/band(s)/antenna(s) and selected DSIs are used for non-head to head to non-head exposure switch test. If the non-head DSI has Plimit > Pmax +10*log(N) for all radios supported in sub6 simultaneous transmission scenarios, then this test is not required.

- □ Use the highest measured 1g_or_10g SAR at Plimit (Plimit < Pmax) shown in Part 1 report for the selected tech/band/antenna/DSI out of all radio configurations and device positions in Equation (3a), (4a), (5a) and (6a) to calculate time-varying SAR. However, in the case of Plimit > Pmax, the SAR measured in Part 1 report for the corresponding radio configuration selected and tested in Part 2 should be applied in Equation (3a), (4a), (5a) and (6a).

4.2.9 System Level Compliance Continuity

The purpose of system level compliance test is to demonstrate the compliance continuity in the following scenarios:

1. Across technology switch
2. During transition from single technology to multi-technology
3. In transition when WWAN went from ON to airplane mode
4. Active WLAN radio and/or Bluetooth (BT) radio with WWAN in airplane mode
5. Time window transition when WWAN in airplane mode
6. In transition when WWAN went from airplane mode to ON.

Note: Technology in this section refers to WWAN, WLAN or BT

The selection criteria for radios to be tested is to select a radio which has the largest Pmax/Plimit ratio among all configurations supported (including SISO, MIMO, DBS, SISO+MIMO or DBS+MIMO whichever appropriate) within each technology and within the same antenna group.

If the device supports simultaneous transmission of WWAN, WLAN and BT, then the selection criteria for system level compliance continuity test is:

- For a given DSI and antenna group, select band/antenna configurations for WWAN, WLAN and BT technologies that have the largest (Pmax – Plimit) delta. In case of multiple bands/antennas having the

© 2025 Element

Unless otherwise specified, no part of this report may be reproduced or utilized in any part, form or by any means, electronic or mechanical, including photocopying and microfilm, without permission in writing from Element. If you have any questions or have an enquiry about obtaining additional rights to this report or assembly of contents thereof, please contact CT.INFO@ELEMENT.COM.

same difference between Pmax and Plimit within a given technology, then select any one band/antenna out of them.

NOTE: The antennas corresponding to the selected technologies/bands for the system level compliance continuity test case should be in the same antenna group if EUT is configured with GEN2_SUB6 or GEN2_SUB6_MMW.

4.3 Test Procedures for Conducted Power Measurements

This section provides general conducted power measurement procedures to perform compliance test under dynamic transmission scenarios described in Section 3. In practice, an adjustment can be made in these procedures. The justification/clarification may be provided.

4.3.1 Time-Varying Tx Power Transmission

This test is performed with the two pre-defined test sequences described in Section 4.1 for all the technologies and bands selected in Section 4.2.1. The purpose of the test is to demonstrate the effectiveness of power limiting enforcement and that the time-averaged SAR (corresponding time-averaged Tx power) does not exceed the FCC limit at all times (see Eq. (1a) and (1b)).

Test procedure

1. Measure P_{max}, measure P_{limit} and calculate $P_{reserve}$ (measured P_{limit} in dBm – *total_min_reserve* in dB) and follow Section 4.1 to generate the test sequences for all the technologies and bands selected in Section 4.2.1. Both test sequence 1 and test sequence 2 are created based on measured P_{max} and measured P_{limit} of the DUT. Test condition to measure P_{max} and P_{limit} is:
    a. Measure P_{max} with Smart Transmit <u>disabled</u> and callbox set to request maximum power.
    b. Measure P_{limit} with Smart Transmit peak exposure mode <u>enabled</u>, and callbox set to request maximum power.
2. Set DUT to the intended Smart Transmit exposure mode, establish radio link in desired radio configuration, with callbox requesting the DUT's Tx power to be at pre-defined test sequence 1, measure and record Tx power versus time, and then convert the conducted Tx power into 1gSAR or 10gSAR value (see Eq. (1a)) using measured P_{limit} from above Step 1. Perform running time average to determine time-averaged power and 1gSAR or 10gSAR versus time as illustrated in Figure 4-1 where using 100-seconds time window as an example.

    Note: In Eq.(1a), instantaneous Tx power is converted into instantaneous 1gSAR or 10gSAR value by applying the measured worst-case 1gSAR or 10gSAR value at P_{limit} for the corresponding technology/band/antenna/DSI reported in Part 1 report.

    Note: For an easier computation of the running time average, 0 dBm can be added at the beginning of the test sequences the length of the responding time window, for example, add 0dBm for 100-seconds so the running time average can be directly performed starting with the first 100-seconds data using excel spreadsheet. This technique applies to all tests performed in this Part 2 report for easier time-averaged computation using excel spreadsheet.

© 2025 Element

Unless otherwise specified, no part of this report may be reproduced or utilized in any part, form or by any means, electronic or mechanical, including photocopying and microfilm, without permission in writing from Element. If you have any questions or have an enquiry about obtaining additional rights to this report or assembly of contents thereof, please contact CT.INFO@ELEMENT.COM.

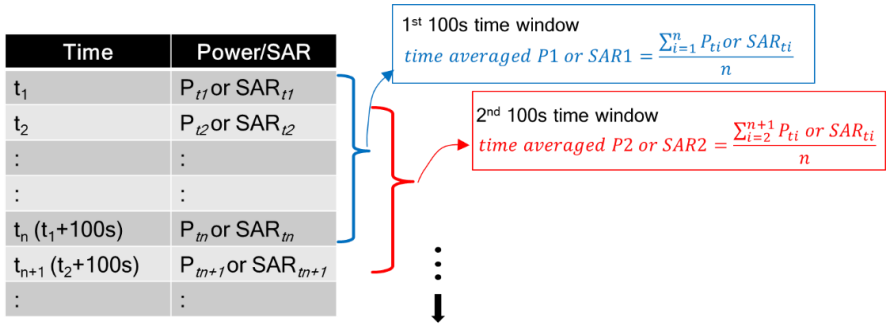

Figure 4-1
Running Average Illustration

3. Make one plot containing:
   a. Instantaneous Tx power versus time measured in Step 2,
   b. Requested Tx power used in Step 2 (test sequence 1),
   c. Computed time-averaged power versus time determined in Step 2,
   d. Time-averaged power limit (corresponding to FCC SAR limit of 1.6 W/kg for 1gSAR or 4.0W/kg for 10gSAR) given by

$$Time\ avearged\ power\ limit = meas.P_{limit} + 10 \times \log(\frac{FCC\ SAR\ limit}{meas.SAR_Plimit}) \qquad (5a)$$

where $meas.P_{limit}$ and $meas.SAR_Plimit$ correspond to measured power at P_{limit} and measured SAR at P_{limit}.

4. Make another plot containing:
   a. Computed time-averaged 1gSAR or 10gSAR versus time determined in Step 2
   b. FCC $1gSAR_{limit}$ of 1.6W/kg or FCC $10gSAR_{limit}$ of 4.0W/kg.
5. Repeat Steps 2 ~ 4 for pre-defined test sequence 2 and replace the requested Tx power (test sequence 1) in Step 2 with test sequence 2.
6. Repeat Steps 2 ~ 5 for all the selected technologies and bands.
7. The validation criteria are, at all times, the time-averaged power versus time shown in Step 3 plot shall not exceed the time-averaged power limit (defined in Eq. (5a)), in turn, the time-averaged 1gSAR or 10gSAR versus time shown in Step 4 plot shall not exceed the FCC limit of 1.6 W/kg for 1gSAR or 4.0 W/kg for 10gSAR (i.e., Eq. (1b)).

4.3.2 Change in Call

This test is to demonstrate that Smart Transmit feature accurately accounts for the past Tx powers during time-averaging when a new call is established.

The call disconnect and re-establishment needs to be performed during power limit enforcement, i.e., when the DUT's Tx power is at $P_{reserve}$ level, to demonstrate the continuity of RF exposure management and limiting in call

© 2025 Element

Unless otherwise specified, no part of this report may be reproduced or utilized in any part, form or by any means, electronic or mechanical, including photocopying and microfilm, without permission in writing from Element. If you have any questions or have an enquiry about obtaining additional rights to this report or assembly of contents thereof, please contact CT.INFO@ELEMENT.COM.

change scenario. In other words, the RF exposure averaged over any FCC defined time window (including the time windows containing the call change) doesn't exceed FCC limit of 1.6 W/kg for 1gSAR or 4.0 W/kg for 10gSAR.

Test procedure

1. Measure P_{limit} for the technology/band selected in Section 4.2.2. Measure P_{limit} with Smart Transmit peak exposure mode enabled, and callbox set to request maximum power.
2. Set DUT to the intended Smart Transmit exposure mode.
3. Establish radio link with callbox in the selected technology/band.
4. Request DUT's Tx power at 0 dBm for at least one time window specified for the selected technology/band, followed by requesting DUT's Tx power to be at maximum power for about ~60 seconds, and then drop the call for ~10 seconds. Afterwards, re-establish another call in the same radio configuration (i.e., same technology/band/channel) and continue callbox requesting DUT's Tx power to be at maximum power for the remaining time of at least another full duration of the specified time window. Measure and record Tx power versus time. Once the measurement is done, extract instantaneous Tx power versus time, convert the measured conducted Tx power into 1gSAR or 10gSAR value using Eq. (1a), and then perform the running time average to determine time-averaged power and 1gSAR or 10gSAR versus time.

   NOTE: In Eq.(1a), instantaneous Tx power is converted into instantaneous 1gSAR or 10gSAR value by applying the measured worst-case 1gSAR or 10gSAR value at P_{limit} for the corresponding technology/band/antenna/DSI reported in Part 1 report.

5. Make one plot containing: (a) instantaneous Tx power versus time, (b) requested power, (c) computed time-averaged power, (d) time-averaged power limit calculated using Eq.(5a).
6. Make another plot containing: (a) computed time-averaged 1gSAR or 10gSAR versus time, and (b) FCC limit of 1.6 W/kg for 1gSAR or 4.0 W/kg for 10gSAR.

The validation criteria are, at all times, the time-averaged power versus time shall not exceed the time-averaged power limit (defined in Eq.(5a)), in turn, the time-averaged 1gSAR or 10gSAR versus time shall not exceed the FCC limit of 1.6 W/kg for 1gSAR or 4.0 W/kg for 10gSAR (i.e., Eq. (1b)).

4.3.3 Change In Technology/Band

This test is to demonstrate the correct power control by Smart Transmit during technology switches and/or band handovers.

Similar to the change in call test in Section 4.3.2, to validate the continuity of RF exposure limiting during the transition, the technology and band handover needs to be performed when DUT's Tx power is at $P_{reserve}$ level (i.e., during Tx power enforcement) to make sure that the DUT's Tx power from previous $P_{reserve}$ level to the new $P_{reserve}$ level (corresponding to new technology/band). Since the P_{limit} could vary with technology and band, Eq. (1a) can be written as follows to convert the instantaneous Tx power in 1gSAR or 10gSAR exposure for the two given radios, respectively:

$$1g_or_10gSAR_1(t) = \frac{conducted_Tx_power_1(t)}{conducted_Tx_power_P_{limit_1}} * 1g_or_10gSAR_P_{limit_1} \qquad (6a)$$

© 2025 Element
REV 1.0
04/06/2020
Unless otherwise specified, no part of this report may be reproduced or utilized in any part, form or by any means, electronic or mechanical, including photocopying and microfilm, without permission in writing from Element. If you have any questions or have an enquiry about obtaining additional rights to this report or assembly of contents thereof, please contact CT.INFO@ELEMENT.COM.

$$1g_or_10gSAR_2(t) = \frac{conducted_Tx_power_2(t)}{conducted_Tx_power_P_{limit_2}} * 1g_or_10gSAR_P_{limit_2} \quad (6b)$$

$$\frac{1}{T_{SAR}}\left[\int_{t-T_{SAR}}^{t_1} \frac{1g_or_10gSAR_1(t)}{FCC\ SAR\ limit} dt + \int_{t-T_{SAR}}^{t} \frac{1g_or_10gSAR_2(t)}{FCC\ SAR\ limit} dt\right] \leq 1 \quad (6c)$$

where, *conducted_Tx_power_1(t)*, *conducted_Tx_power_P*$_{limit_1}$, and *1g_or_10gSAR_P*$_{limit_1}$ correspond to the measured instantaneous conducted Tx power, measured conducted Tx power at P_{limit}, and measured *1gSAR* or *10gSAR* value at P_{limit} of technology1/band1; *conducted_Tx_power_2(t)*, *conducted_Tx_power_P*$_{limit_2}$*(t)*, and *1g_or_10gSAR_P*$_{limit_2}$ correspond to the measured instantaneous conducted Tx power, measured conducted Tx power at P_{limit}, and measured *1gSAR* or *10gSAR* value at P_{limit} of technology2/band2. Transition from technology1/band1 to the technology2/band2 happens at time-instant 't_1'.

Test procedure

1. Measure P_{limit} for both the technologies and bands selected in Section 4.2.3. Measure P_{limit} with Smart Transmit peak exposure mode enabled, and callbox set to request maximum power.
2. Set DUT to the intended Smart Transmit exposure mode. Establish radio link with callbox in first technology/band selected. Establish radio link with callbox in first technology/band selected.
3. Request DUT's Tx power at 0 dBm for at least one time window specified for the selected technology/band, followed by requesting DUT's Tx power to be at maximum power for about ~60 seconds, and then switch to second technology/band selected. Continue with callbox requesting DUT's Tx power to be at maximum power for the remaining time of at least another full duration of the specified time window. Measure and record Tx power versus time for the full duration of the test.
4. Once the measurement is done, extract instantaneous Tx power versus time, and convert the conducted Tx power into 1gSAR or 10gSAR value using Eq. (6a) and (6b) and corresponding measured P_{limit} values from Step 1 of this section. Perform the running time average to determine time-averaged power and 1gSAR or 10gSAR versus time.

   NOTE: In Eq.(6a) & (6b), instantaneous Tx power is converted into instantaneous 1gSAR or 10gSAR value by applying the measured worst-case 1gSAR or 10gSAR value at P_{limit} for the corresponding technology/band/antenna/DSI reported in Part 1 report.

5. Make one plot containing: (a) instantaneous Tx power versus time, (b) requested power, (c) computed time-averaged power, (d) time-averaged power limit calculated using Eq.(5a).
6. Make another plot containing: (a) computed time-averaged 1gSAR or 10gSAR versus time, and (b) FCC limit of 1.6 W/kg for 1gSAR or 4.0 W/kg for 10gSAR.

The validation criteria are, at all times, the time-averaged 1gSAR or 10gSAR versus time shall not exceed the FCC limit of 1.6 W/kg for 1gSAR or 4.0 W/kg for 10gSAR (i.e., Eq. (6c)).

4.3.4 Change In Antenna

This test is to demonstrate the correct power control by Smart Transmit during antenna switches from one antenna to another. The test procedure is identical to Section 4.3.3, by replacing technology/band switch operation with antenna switch. The validation criteria are, at all times, the time-averaged 1gSAR or 10gSAR versus time shall not exceed FCC limit of 1.6 W/kg for 1gSAR or 4.0 W/kg for 10gSAR.

© 2025 Element

Unless otherwise specified, no part of this report may be reproduced or utilized in any part, form or by any means, electronic or mechanical, including photocopying and microfilm, without permission in writing from Element. If you have any questions or have an enquiry about obtaining additional rights to this report or assembly of contents thereof, please contact CT.INFO@ELEMENT.COM.

NOTE: If the DUT does not support antenna switch within the same technology/band, but has multiple antennas to support different frequency bands, then the antenna switch test is included as part of change in technology and band (Section 4.3.3) test.

4.3.5 Change In DSI

This test is to demonstrate the correct power control by Smart Transmit during DSI switches from one DSI to another. The test procedure is identical to Section 4.3.3, by replacing technology/band switch operation with DSI switch. The validation criteria are, at all times, the time-averaged 1gSAR or 10gSAR versus time shall not exceed FCC limit of 1.6 W/kg for 1gSAR or 4.0 W/kg for 10gSAR.

4.3.6 Change In Time Window

This test is to demonstrate the correct power control by Smart Transmit during the change in averaging time window when a specific band handover occurs. FCC specifies time-averaging windows of 100s for Tx frequency < 3GHz, and 60s for Tx frequency between 3GHz and 6GHz.

To validate the continuity of RF exposure limiting during the transition, the band handover test needs to be performed when EUT handovers from operation band less than 3GHz to greater than 3GHz and vice versa. The equations (3a) and (3b) in Section 2 can be written as follows for transmission scenario having change in time window,

$$1gSAR_1(t) = \frac{conducted_Tx_power_1(t)}{conducted_Tx_power_P_{limit_1}} * 1g_or\ 10g_SAR_P_{limit_1} \qquad (7a)$$

$$1gSAR_2(t) = \frac{conducted_Tx_power_2(t)}{conducted_Tx_power_P_{limit_2}} * 1g_or\ 10g_SAR_P_{limit_2} \qquad (7b)$$

$$\frac{1}{T1_{SAR}}\left[\int_{t-T1_{SAR}}^{t_1} \frac{1g_or\ 10g_SAR_1(t)}{FCC\ SAR\ limit} dt\right] + \frac{1}{T2_{SAR}}\left[\int_{t-T2_{SAR}}^{t} \frac{1g_{or}10g_SAR_2(t)}{FCC\ SAR\ limit} dt\right] \leq 1 \qquad (7c)$$

where, *conducted_Tx_power_1(t)*, *conducted_Tx_power_P*$_{limit_1}$*(t)*, and *1g_ or 10g_SAR_P*$_{limit_1}$ correspond to the instantaneous Tx power, conducted Tx power at P_{limit}, and compliance *1g_ or 10g_SAR* values at P_{limit_1} of band1 with time-averaging window '$T1_{SAR}$'; *conducted_Tx_power_2(t)*, *conducted_Tx_power_P*$_{limit_2}$*(t)*, and *1g_ or 10g_SAR_P*$_{limit_2}$ correspond to the instantaneous Tx power, conducted Tx power at P_{limit}, and compliance *1g_ or 10g_SAR* values at P_{limit_2} of band2 with time-averaging window '$T2_{SAR}$'. One of the two bands is less than 3GHz, another is greater than 3GHz. Transition from first band with time-averaging window '$T1_{SAR}$' to the second band with time-averaging window '$T2_{SAR}$' happens at time-instant 't_1'.

Test procedure

1. Measure P_{limit} for both the technologies and bands selected in Section 4.2.6. Measure P_{limit} with Smart Transmit peak exposure mode enabled, and callbox set to request maximum power.
2. Set DUT to the intended Smart Transmit exposure mode.

Transition from 100s time window to 60s time window, and vice versa

3. Establish radio link with callbox in the technology/band having 100s time window selected in Section 4.2.6.
4. Request EUT's Tx power to be at 0 dBm for at least 100 seconds, followed by requesting EUT's Tx power to be at maximum power for about ~140 seconds, and then switch to second technology/band (having

© 2025 Element
REV 1.0
04/06/2020
Unless otherwise specified, no part of this report may be reproduced or utilized in any part, form or by any means, electronic or mechanical, including photocopying and microfilm, without permission in writing from Element. If you have any questions or have an enquiry about obtaining additional rights to this report or assembly of contents thereof, please contact CT.INFO@ELEMENT.COM.

60s time window) selected in Section 4.2.6. Continue with callbox requesting EUT's Tx power to be at maximum power for about ~60s in this second technology/band, and then switch back to the first technology/band. Continue with callbox requesting EUT's Tx power to be at maximum power for at least another 100s. Measure and record Tx power versus time for the entire duration of the test.

5. Once the measurement is done, extract instantaneous Tx power versus time, and convert the conducted Tx power into 1gSAR or 10gSAR value (see Eq. (7a) and (7b)) using corresponding technology/band Step 1 result, and then perform 100s running average to determine time-averaged 1gSAR or 10gSAR versus time. Note that in Eq.(7a) & (7b), instantaneous Tx power is converted into instantaneous 1gSAR or 10gSAR value by applying the worst-case 1gSAR or 10gSAR value tested in Part 1 for the selected technologies/bands at P_{limit}.
6. Make one plot containing: (a) instantaneous Tx power versus time measured in Step 4.
7. Make another plot containing: (a) instantaneous 1gSAR versus time determined in Step 5, (b) computed time-averaged 1gSAR versus time determined in Step 5, and (c) corresponding regulatory $1gSAR_{limit}$ of 1.6W/kg or $10gSAR_{limit}$ of 4.0W/kg.

Transition from 60s time window to 100s time window, and vice versa

1. Establish radio link with callbox in the technology/band having 60s time window selected in Section 4.2.6.
2. Request EUT's Tx power to be at 0 dBm for at least 60 seconds, followed by requesting EUT's Tx power to be at maximum power for about ~80 seconds, and then switch to second technology/band (having 100s time window) selected in Section 4.2.6. Continue with callbox requesting EUT's Tx power to be at maximum power for about ~100s in this second technology/band, and then switch back to the first technology/band. Continue with callbox requesting EUT's Tx power to be at maximum power for the remaining time for a total test time of 500 seconds. Measure and record Tx power versus time for the entire duration of the test.
3. Repeat above Step 5~7 to generate the plots

   The validation criteria is, at all times, the time-averaged 1gSAR or 10gSAR versus time shall not exceed the regulatory $1gSAR_{limit}$ of 1.6W/kg or $10gSAR_{limit}$ of 4.0W/kg.

4.3.7 SAR Exposure Switching

This test is to demonstrate that Smart Transmit feature is accurately accounts for switching in exposures among SAR from radio1 only, SAR from both radio1 and radio2, and SAR from radio2 only scenarios, and ensures total time-averaged RF exposure complies with the FCC limit. Here, radio1 represents primary radio (for example, LTE anchor in a NR non-standalone mode call) and radio2 represents secondary radio (for example, sub6 NR or mmW NR). The detailed test procedure for SAR exposure switching in the case of LTE+Sub6 NR non-standalone mode transmission scenario is provided in APPENDIX F.

Test procedure:

1. Measure conducted Tx power corresponding to P_{limit} for radio1 and radio2 in selected band. Test condition to measure conducted P_{limit} is:
   - □ Establish device in call with the callbox for radio1 technology/band. Measure conducted Tx power corresponding to radio1 P_{limit} with Smart Transmit peak exposure mode <u>enabled,</u> and callbox set to request maximum power.

© 2025 Element

Unless otherwise specified, no part of this report may be reproduced or utilized in any part, form or by any means, electronic or mechanical, including photocopying and microfilm, without permission in writing from Element. If you have any questions or have an enquiry about obtaining additional rights to this report or assembly of contents thereof, please contact CT.INFO@ELEMENT.COM.

- Repeat above step to measure conducted Tx power corresponding to radio2 P_{limit}. If radio2 is dependent on radio1 (for example, non-standalone mode of Sub6 NR requiring radio1 LTE as anchor), then establish radio1 + radio2 call with callbox, and request all down bits for radio1 LTE. In this scenario, with callbox requesting maximum power from radio2 Sub6 NR, measured conducted Tx power corresponds to radio2 P_{limit} (as radio1 LTE is at all-down bits)

2. Set DUT to the intended Smart Transmit exposure mode, with EUT setup for radio1 + radio2 call. In this description, it is assumed that radio2 has lower priority than radio1. Establish device in radio1+radio2 call, and request all-down bits or low power on radio1, with callbox requesting EUT's Tx power to be at maximum power in radio2 for at least one time window. After one time window, set callbox to request EUT's Tx power to be at maximum power on radio1, i.e., all-up bits. Continue radio1+radio2 call with both radios at maximum power for at least one time window, and drop (or request all-down bits on) radio2. Continue radio1 at maximum power for at least one time window. Record the conducted Tx power for both radio1 and radio2 for the entire duration of this test.
3. Once the measurement is done, extract instantaneous Tx power versus time for both radio1 and radio2 links. Convert the conducted Tx power for both these radios into 1gSAR or 10gSAR value (see Eq. (6a) and (6b)) using corresponding technology/band P_{limit} measured in Step 1, and then perform the running time average to determine time-averaged 1gSAR or 10gSAR versus time.
4. Make one plot containing: (a) instantaneous Tx power versus time measured in Step 2.
5. Make another plot containing: (a) instantaneous 1gSAR versus time determined in Step 3, (b) computed time-averaged 1gSAR versus time determined in Step 3, and (c) corresponding regulatory $1gSAR_{limit}$ of 1.6W/kg or $10gSAR_{limit}$ of 4.0W/kg.

The validation criteria is, at all times, the time-averaged 1gSAR or 10gSAR versus time shall not exceed the regulatory $1gSAR_{limit}$ of 1.6W/kg or $10gSAR_{limit}$ of 4.0W/kg.

NOTE: If *multi_Tx_factor* is set to > 1.0 with EFS version 19 (or higher), then in single Tx transmission scenarios, Smart Transmit ensures time-averaged RF exposure is ≤ (*SAR_design_target* * $10^{(+\text{ sub6 device uncertainty}/10)}$) < regulatory RF exposure limit for sub6 radio managed by Smart Transmit. In simultaneous Tx transmission scenarios, Smart Transmit ensures time-averaged RF exposure is ≤ (*SAR_design_target* * *multi_Tx_factor* * $10^{(+\text{ sub6 device uncertainty}/10)}$) < regulatory RF exposure limit for sub6 radios managed by Smart Transmit. These simultaneous transmission scenarios are listed below:

- 2-or-more radio scenarios within WWAN like EN-DC, LTE ULCA, etc.
- 2-or-more-radio across technologies such as WWAN+WLAN, WWAN+BT, WLAN+BT, WLAN + WLAN and WWAN+WLAN+BT transmission scenarios (if WLAN/BT radios are also managed by Smart Transmit).

4.3.8 Exposure Category Switch

This test is performed with the EUT being requested to transmit at maximum power in selected technology/band/antenna/DSI. The change in exposure category is preferrably performed during Tx power enforcement (i.e., EUT forced to transmit at a sustainable level). One test is sufficient as this feature operation is independent of technology, band and antenna. Test procedure are:

© 2025 Element

Unless otherwise specified, no part of this report may be reproduced or utilized in any part, form or by any means, electronic or mechanical, including photocopying and microfilm, without permission in writing from Element. If you have any questions or have an enquiry about obtaining additional rights to this report or assembly of contents thereof, please contact CT.INFO@ELEMENT.COM.

In case of head to non-head to head exposure switch test, 'first DSI' in below test procedure refers to head DSI and 'second DSI' refers to non-head DSI. Similarly, in case of non-head to head to non-head exposure switch test, 'first DSI' in below test procedure refers to non-head DSI and 'second DSI' refers to head DSI.

1. Measure *Plimit* for all the technology(s)/band(s)/antenna(s)/DSI(s) selected following the above selection criteria. Measure *Plimit* with Smart Transmit Peak exposure mode enabled and callbox set to request maximum power.
2. Set EUT to intended Smart Transmit exposure mode.
3. Establish radio link with first DSI and with callbox in the selected technology(s)/band(s)/antenna(s).Request EUT to transmit at 0 dBm for at least 100 seconds, followed by requesting EUT to transmit at maximum Tx power for the active radio(s) for half of the regulatory time window, and then switch to the second DSI for ~10s, and switch back to the first DSI for at least one time window. Throughout this test, when switching between DSIs (i.e., switching between exposure categories), continue with callbox requesting EUT to transmit at maximum Tx power for the active radio(s). Measure and record Tx power versus time for the entire duration of the test.
4. Once the measurement is done, extract instantaneous Tx power versus time, and convert the conducted Tx power into 1g_or_10gSAR value (see Eq. (7a) and (7b)) using the corresponding *Plimit* measured in Step 1 and 1g_or_10gSAR value measured in 80-W2112-4 Part 1 report, and then perform 100s running average to determine time-averaged 1g_or_10gSAR versus time as illustrated in Figure 5-1. Note that in Eq.(7a) & (7b), instantaneous Tx power is converted into instantaneous 1g_or_10gSAR value by applying the worst-case 1gSAR value for the selected technologies/bands at *Plimit* as reported in 80- W2112-4 Part 1 report.
5. Make one plot containing: (a) computed time-averaged normalized 1g_or_10gSAR of the selected technology(s)/band(s)/antenna(s) versus time determined in Step 5 for exposure under first DSI , (b) total time-averaged normalized exposure for exposure under first DSI if simultaneous transmission scenario was tested, and (c) normalized regulatory limit of 1.0.
6. Make another plot containing: (a) computed time-averaged 1g_or_10gSAR of the selected technology(s)/band(s)/antenna(s) versus time determined in Step 5 for exposure under second DSI, (b) total time-averaged normalized exposure for exposure under second DSI if simultaneous transmission scenario was tested, and (c) normalized regulatory limit of 1.0.

The validation criteria is, at all times, the time-averaged normalized exposure versus time shall not exceed the normalized limit of 1.0 for both first & second DSIs (i.e., both head exposure category and non-head exposure category).

4.3.9 System Level Compliance Continuity

Below is the test flow outline of the system level compliance test. The test contains 6 sections and 5 transitions: Start with WWAN radio transmission (Section A), transition to WLAN transmission (Section B), transition to simultaneous transmission of WWAN + WLAN + BT (Section C), then drop off WWAN radio and set WWAN to airplane mode, at the same time transition to WLAN+BT transmission simultaneously (Section D), transition to BT only transmission (Section E), transition to WLAN only transmission (Section F), and finally transition to simultaneous transmission of WWAN + WLAN + BT (Section G).

© 2025 Element

Unless otherwise specified, no part of this report may be reproduced or utilized in any part, form or by any means, electronic or mechanical, including photocopying and microfilm, without permission in writing from Element. If you have any questions or have an enquiry about obtaining additional rights to this report or assembly of contents thereof, please contact CT.INFO@ELEMENT.COM.

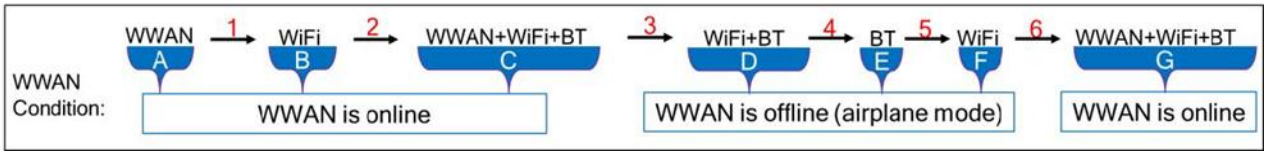

Figure 4-2
Schematic of technology transitions for system level compliance continuity test

1. Measure conducted Tx power corresponding to *Plimit* for all three (WWAN, WLAN & BT) technologies in the selected radio configurations. Test condition to measure conducted *Plimit* for each technology is:

   - Establish device in call with the callbox for the first technology in desired band. Measure conducted Tx power corresponding to the first technology *Plimit* with Smart Transmit Peak exposure mode enabled and callbox set to request maximum power (or maximum duty cycle in case of WLAN/BT).
   - Repeat above step to measure conducted Tx power corresponding to the remaining two technologies' *Plimit*. In the case of BT, measured conducted Tx power is compensated by tested duty cycle and *BT_STANDALONE* EFS parameter, i.e., measured *Plimit* = conducted power measured in BT standalone condition / *BT_STANDALONE / BT_duty_cycle*.

2. Set EUT to the intended Smart Transmit exposure mode.

3. As depicted in Figure 4-2, first

i. Section A: Establish WWAN connection with the callbox in selected WWAN radio configuration. Request EUT to transmit at 0 dBm for at least one WWAN time window (100s or 60s), followed by requesting EUT to transmit at maximum Tx power for {one WWAN time window (T_{WWAN} = 100s if f < 3GHz or 60s if 3GHz < f < 6GHz for FCC, 360s for ICNIRP) + the maximum high power duration allowed in one T_{WWAN}}, denoted as T_{A_WWAN}.

ii. Section B: After T_{A_WWAN}, drop WWAN connection and establish WLAN connection with the callbox in selected WLAN radio configuration and request EUT to transmit at maximum duty cycle (and maximum power) for {one WLAN time-window duration (T_{WLAN} = 30s for all WLAN frequency bands for FCC, 360s for ICNIRP) + the maximum high power duration allowed in one T_{WLAN}}, denoted T_{B_WLAN}.

iii. Section C: After T_{B_WLAN} , add the selected WWAN and BT radios to have the simultaneous transmission of WWAN + WLAN + BT. Request WWAN radio to transmit at maximum power and request WLAN & BT radios to transmit at maximum duty cycle (and maximum power) for at least one max{T_{A_WWAN}, T_{B_WLAN}, T_{BT}}, where, T_{BT} = 100s for FCC, 360s for ICNIRP.

iv. Section D: Drop WWAN connection and set WWAN modem into airplane mode. Continue requesting WLAN & BT radios to transmit at maximum duty cycle (and maximum power) for at least two times the max{ T_{WLAN}, T_{BT}}.

v. Section E: Drop WLAN connection. Continue requesting BT radio to transmit at maximum duty cycle (and maximum power). Continue the test for at least one T_{BT} .

vi. Section F: In the case of FCC time windows, after at least one T_{BT}, drop BT connection and establish back WLAN connection in selected radio configuration. Continue requesting WLAN radio to transmit

© 2025 Element

Unless otherwise specified, no part of this report may be reproduced or utilized in any part, form or by any means, electronic or mechanical, including photocopying and microfilm, without permission in writing from Element. If you have any questions or have an enquiry about obtaining additional rights to this report or assembly of contents thereof, please contact CT.INFO@ELEMENT.COM.

at maximum duty cycle (and maximum power). Continue the test for at least one max { TWLAN, TBT}. In the case of ICNIRP time windows, Section F is not required.

vii. Section G: Disable airplane mode and add WWAN and BT connections after Section F in the case of FCC time windows (Disable airplane mode and add WWAN and WLAN connections after Section E in the case of ICNIRP time windows) to have the simultaneous transmission of WWAN + WLAN + BT. Request WWAN radio to transmit at maximum power and request WLAN & BT radios to transmit at maximum duty cycle (and maximum power) for at least one max{TA_WWAN, TB_WLAN, TBT}, where, TBT = 100s for FCC, 360s for ICNIRP.

4. Once the measurement is done, extract instantaneous Tx power versus time for all WWAN, WLAN and BT radios in selected configurations. Similar to technology/band switch test in Section 4.3.3, convert the conducted Tx power for both these radios into 1g_or_10gSAR value (see Eq. (7a) and (7b)) using corresponding technology/band Plimit measured in Step 1, and then perform running average over corresponding time-windows (i.e., 100s/60s for WWAN radio, 30s for WLAN radio and 100s for BT radio in case of FCC time-windows, and 360s for all of them in case of ICNIRP time-windows) to determine time-averaged 1g_or_10gSAR versus time as illustrated in Figure 4-1.

5. Make one plot containing: (a) computed normalized time-averaged 1g_or_10gSAR for WWAN radio configuration versus time determined in Step 4, (b) computed normalized time- averaged 1g_or_10gSAR for WLAN radio configuration versus time determined in Step 4, (c) computed normalized time-averaged 1g_or_10gSAR for WLAN radio configuration versus time determined in Step 4, (d) computed total normalized time-averaged 1g_or_10gSAR versus time (sum of Steps (5.a), (5.b) and (5.c)) determined in Step 4, and (e) corresponding normalized regulatory 1g_or_10gSARlimit limit of 1.0.

The validation criteria is, at all times, the time-averaged 1g_or_10gSAR versus time shall not exceed the regulatory 1g_or_10gSARlimit limit.

NOTE: If *multi_Tx_factor* is set to > 1.0 with EFS version 19 (or higher), then in single Tx transmission scenarios, Smart Transmit ensures time-averaged RF exposure is ≤ (*SAR_design_target* * $10^{(+\text{ sub6 device uncertainty}/10)}$) < regulatory RF exposure limit for sub6 radio managed by Smart Transmit. In simultaneous Tx transmission scenarios, Smart Transmit ensures time-averaged RF exposure is ≤ (*SAR_design_target* * *multi_Tx_factor* * $10^{(+\text{ sub6 device uncertainty}/10)}$) < regulatory RF exposure limit for sub6 radios managed by Smart Transmit. These simultaneous transmission scenarios are listed below:

- 2-or-more radio scenarios within WWAN like EN-DC, LTE ULCA, etc.
- 2-or-more-radio across technologies such as WWAN+WLAN, WWAN+BT, WLAN+BT, WLAN + WLAN and WWAN+WLAN+BT transmission scenarios (if WLAN/BT radios are also managed by Smart Transmit).

© 2025 Element

Unless otherwise specified, no part of this report may be reproduced or utilized in any part, form or by any means, electronic or mechanical, including photocopying and microfilm, without permission in writing from Element. If you have any questions or have an enquiry about obtaining additional rights to this report or assembly of contents thereof, please contact CT.INFO@ELEMENT.COM.

5 TEST CONFIGURATIONS

5.1 Sub-6 Transmission

The P_{limit} values, corresponding to 1.0 W/kg (1gSAR) and 2.5 W/kg (10gSAR) of *SAR_design_target*, for technologies and bands supported by DUT are derived in Part 0 report and summarized in Table 5-1. Note all P_{limit} power levels entered in Table 5-1 correspond to average power levels after accounting for duty cycle in the case of TDD modulation schemes.

Table 5-1
P_{limit} for supported technologies and bands (P_{limit} in EFS file)

Exposure Scenario			Maximum Tune-Up Output Power*	Body-Worn, Hotspot, or Phablet	Head
Averaging Volume				1g/10g	1g
Spacing				10mm, 5mm, 0mm	0mm
DSI				0	1
Technology/Band	Antenna	Antenna Group	P_{max}	P_{limit}	P_{limit}
GSM 850	A	AG0	25.3	26.3	29.9
GSM 850	E	AG1	25.3	20.8	20.3
GSM 1900	A	AG0	22.1	17.8	27.5
UMTS 850	A	AG0	24.0	25.5	27.9
UMTS 850	E	AG1	24.0	21.0	20.0
UMTS 1750	A	AG0	23.0	16.0	26.7
UMTS 1900	A	AG0	23.0	17.0	26.9
LTE Band 12/17	A	AG0	24.0	25.9	27.1
LTE Band 12/17	E	AG1	24.0	22.0	21.0
LTE Band 13	A	AG0	24.0	25.1	28.0
LTE Band 13	E	AG1	24.0	21.0	21.0
LTE Band 26/5	A	AG0	24.0	25.7	28.4
LTE Band 26/5	E	AG1	24.0	21.0	21.0
LTE Band 66/4	A	AG0	23.5	17.0	27.6
LTE Band 66/4	F	AG1	23.5	20.0	18.0
LTE Band 25/2	A	AG0	23.0	17.0	26.2
LTE Band 25/2	F	AG1	23.0	20.0	18.0
LTE Band 41 PC3	B	AG0	22.0	17.0	31.9
LTE Band 41 PC3	F	AG1	22.0	18.5	16.0
LTE Band 41 PC2	B	AG0	21.4	17.0	31.9
LTE Band 41 PC2	F	AG1	21.4	18.5	16.0
NR Band n5	A	AG0	24.0	26.1	28.4
NR Band n5	E	AG1	24.0	21.0	21.0
NR Band n66	A	AG0	23.5	17.0	28.0
NR Band n66	F	AG1	23.5	20.0	18.0
NR Band n25/n2	A	AG0	23.0	17.0	28.1
NR Band n25/n2	F	AG1	23.0	20.0	18.0
NR Band n41 PC3 (Path 1)	F	AG1	24.0	18.5	16.0
NR Band n41 PC3 (Path 1)	B	AG0	21.0	17.0	21.0
NR Band n41 PC3 (Path 1)	E	AG1	22.5	15.5	14.5
NR Band n41 PC3 (Path 1)	D	AG0	19.5	15.5	14.5
NR Band n41 PC3 (Path 2)	B	AG0	24.0	17.0	21.0
NR Band n41 PC3 (Path 2)	F	AG1	18.5	18.5	16.0
NR Band n41 PC3 (Path 2)	D	AG0	22.5	15.5	14.5
NR Band n41 PC3 (Path 2)	E	AG1	18.0	15.5	14.5
NR Band n77 PC2	F	AG1	26.3	16.5	15.0
NR Band n77 PC2	C	AG0	21.5	11.5	10.0
NR Band n77 PC2	H	AG1	25.0	16.5	15.0
NR Band n77 PC2	D	AG0	21.0	10.5	9.0
2.4 GHz Bluetooth	G	AG1	18.4	18.6	19.7
2.4 GHz Bluetooth	I	AG1	17.4	20.6	19.2
2.4 GHz Bluetooth MIMO	G	AG1	13.9	19.2	19.8
2.4 GHz Bluetooth MIMO	I	AG1	12.0	17.8	18.0
2.4 GHz WIFI	G	AG1	19.0	19.7	15.0
2.4 GHz WIFI	I	AG1	19.0	19.7	15.0
2.4 GHz WIFI	MIMO	AG1	17.0	17.9	15.0
5 GHz WIFI	G	AG1	17.0	13.0	15.0
5 GHz WIFI	E	AG1	17.0	13.0	15.0
5 GHz WIFI	MIMO	AG1	17.0	13.0	15.0
6 GHz WIFI	G	AG1	16.0	11.0	15.0
6 GHz WIFI	E	AG1	16.0	11.0	15.0
6 GHz WIFI	MIMO	AG1	16.0	11.0	15.0

© 2025 Element

Unless otherwise specified, no part of this report may be reproduced or utilized in any part, form or by any means, electronic or mechanical, including photocopying and microfilm, without permission in writing from Element. If you have any questions or have an enquiry about obtaining additional rights to this report or assembly of contents thereof, please contact CT.INFO@ELEMENT.COM.

* Maximum tune up target power, $P_{max,nom}$, is configured in NV settings in DUT to limit maximum transmitting power. This power is converted into peak power in NV settings for TDD schemes. The DUT maximum allowed output power is equal to $P_{max,nom}$ + 1 dB device uncertainty.

Based on selection criteria described in Section 4.2, the technologies/bands selected for Time-Averaged SAR assessment are highlighted in yellow in Table 5-1 and Table 5-2. Per the manufacturer, the Total_min_res_ratio of 0.5 and multi-Tx factor of 1.27 are set in EFS and used in Time-Averaged SAR assessment.

The radio configurations used for Time-Averaged SAR assessment test for selected technologies, bands, DSIs, antennas and corresponding worst-case radio configuration SAR values (extracted from Part 1 report) are listed in Table 5-2. The corresponding worst-case radio configuration 1gSAR values for selected technology/band/DSI are extracted from Part 1 report and are listed in the last columns of Table 5-2.

Based on equations (1a), (2a) and (3a), it is clear that Part 2 testing outcome is normalized quantity, which implies that it can be applied to any radio configuration within a selected technology/band/DSI. Thus, as long as applying the worst-case SAR obtained from the worst radio configuration in Part 1 testing to calculate time-varying SAR exposure in equations (1a), (2a) and (3a), the accuracy in compliance demonstration remains the same. Therefore, there may be some differences between the radio configuration selected for Part 2 testing and the radio configuration associated with worst-case SAR obtained in the Part 1 evaluation.

The measured Plimit for all the selected radio configurations are listed in below Table 5-2. Pmax was also measured for radio configurations selected for testing time-varying Tx power transmission scenarios in order to generate test sequences following the test procedures in Section 4.1.

The device uncertainty for this DUT is 1.0 dB. Multi-Tx factor is set to 1.27 per manufacturer. Per Surface TER (PSTER) feature is disabled.

© 2025 Element

Unless otherwise specified, no part of this report may be reproduced or utilized in any part, form or by any means, electronic or mechanical, including photocopying and microfilm, without permission in writing from Element. If you have any questions or have an enquiry about obtaining additional rights to this report or assembly of contents thereof, please contact CT.INFO@ELEMENT.COM.

Table 5-2
Radio configurations selected for Part 2 test

Test Case #	Test Scenario	Tech	Band	Antenna	DSI	Channel	Frequency [MHz]	Test Configurations	EFS Plimit [dBm]	Tune-up Pmax [dBm]	Measured Plimit [dBm]	Measured Pmax [dBm]	Calculated Part 2 Worst Case SAR at Plimit (W/kg)	Worst Case in Part 1 Report		
														SAR Exposure Scenario	Measured Plimit (dBm)	Meas. SAR at Plimit (W/kg)
1	Time Varying TxPower	GSM	850	E	0	128	836.5	GPRS 4 Tx Slots	20.8	24.3	20.51	23.73	0.565	Back Side, 5mm	20.77	0.600
2		WCDMA	4	A	0	1412	1745	RMC	16.0	23.0	16.68	23.32	0.621	Back Side, 5mm	16.12	0.546
3		LTE	41 PC3	F	1	40620	2593	QPSK 1/50/20 MHz BW	16.0	22.0	16.87	22.96	0.892	Right Tilt	16.29	0.781
4		NR	n25	A	0	376500	1882.5	DFT-S-OFDM, QPSK 1/1/40 MHz BW	17.0	23.0	17.83	23.88	0.860	Front Side, 5mm	17.35	0.770
5		WLAN	5 GHz	E	0	36	5180	802.11ac 20MHz DSSS	13.0	17.0	13.33	17.25	0.780	Back Side, 5mm	12.80	0.690
6	Change in Call	LTE	41 PC3	F	1	40620	2593	QPSK 1/50/20 MHz BW	16.0	22.0	16.87	22.96	0.892	Right Tilt	16.29	0.781
7	Change in Technology/Band/Antenna	LTE	41 PC3	F	1	40620	2593	QPSK 1/50/20 MHz BW	16.0	22.0	16.87	22.96	0.892	Right Tilt	16.29	0.781
		WCDMA	5	E	1	4183	836.5	RMC	20.0	24.0	20.27	23.99	0.541	Left Cheek	20.71	0.598
8	Change in Time Window	LTE	5	E	0	20525	836.5	QPSK 1/25/10 MHz BW	21.0	24.0	21.28	24.48	0.823	Back Side, 5mm	20.96	0.765
		WLAN	5 GHz	E	0	36	5180	802.11ac 20MHz DSSS	13.0	17.0	13.33	17.25	0.780	Back Side, 5mm	12.80	0.690
9	WWAN SAR Exposure Switching (EN-DC) Same time Window	LTE	5	E	1	20525	836.5	QPSK 1/25/10 MHz BW	21.0	24.0	21.28	24.48	0.858	Left Cheek	20.96	0.797
		Sub6 NR	n66	F	1	349000	1745	DFT-S-OFDM, QPSK 1/1/45 MHz BW	18.0	23.5	18.33	23.90	0.787	Right Tilt	17.70	0.681
10	WWAN SAR Exposure Switching (EN-DC) Different Time Window	LTE	5	E	1	20525	836.5	QPSK 1/25/10 MHz BW	21.0	24.0	21.28	24.48	0.858	Left Cheek	20.96	0.797
		Sub6 NR	n77	F	1	650000	3750	DFT-S-OFDM, QPSK 1/137/100 MHz BW	15.0	25.5	15.47	25.66	0.716	Right Tilt	15.49	0.719
11	Exposure Category Switch	NR	n77	F	1	650000	3750	DFT-S-OFDM, QPSK 1/137/100 MHz BW	15.0	25.5	15.47	25.66	0.716	Right Tilt	15.49	0.719
					0	650000	3750	DFT-S-OFDM, QPSK 1/137/100 MHz BW	16.5	25.5	16.83	25.66	0.941	Back Side, 5mm	17.26	1.040
12	WLAN SAR Exposure Switching (DBS)	WLAN	6	E	1	21	6055	802.11ax 20MHz DSSS	15.0	16.0	15.39	16.57	0.258	Left Tilt	15.30	0.253
			2.4	I	1	11	2437	802.11n DSSS	15.0	16.0	14.43	16.15	0.582	Left Cheek	14.66	0.614
13	System Level Compliance Continuity WWAN / WLAN / BT	LTE	66	F	0	132322	1745	QPSK 1/50/20 MHz BW	20.0	23.0	20.15	23.85	0.794	Back Side, 5mm	19.34	0.659
		WLAN	5 GHz	E	0	36	5180	802.11ac 20MHz DSSS	13.0	17.0	13.33	17.25	0.780	Back Side, 5mm	12.80	0.690
		BT	2.4	G	0	0	2402	FHSS 1Mbps	18.6	18.4	17.61	17.61	0.811	Back Side, 5mm	18.73	1.050

Note:

- The device's uncertainty of P_{max} is +/- 1 dB as provided by manufacturer
- The above P_{max} value for GPRS850 and GPRS1900 are for 4 Tx Slots
- *Indicated 10g SAR
- All powers are time-averaged powers.

© 2025 Element

Unless otherwise specified, no part of this report may be reproduced or utilized in any part, form or by any means, electronic or mechanical, including photocopying and microfilm, without permission in writing from Element. If you have any questions or have an enquiry about obtaining additional rights to this report or assembly of contents thereof, please contact CT.INFO@ELEMENT.COM.

Table 5-3
DSI and Corresponding Exposure Scenarios

Scenario	Description	SAR Test Cases
Head (DSI = 1)	▪ Device positioned next to head ▪ Receiver Active	*Head SAR per KDB Publication 648474 D04*
Body-worn (DSI = 0)	▪ Device being used with a body-worn accessory	*Body-worn SAR per KDB Publication 648474 D04*
Hotspot mode (DSI = 0)	▪ Device transmits in hotspot mode near body ▪ Hotspot Mode Active	*Hotspot SAR per KDB Publication 941225 D06*
Phablet (DSI = 0)	▪ Device is held with hand	*Phablet SAR per KDB Publication 648474 D04 & KDB Publication 616217 D04*

Based on the selection criteria described in Section 4.2, the radio configurations for the Tx varying transmission test cases listed in Section 3 are:

1. Technologies and bands for time-varying Tx power transmission: Based on selection criteria in Section 4.2.1, The test case 1~5 listed in Table 5-2 are selected to test with the test sequences in both time-varying conducted power measurement and time-varying SAR measurement.
2. Technology and band for change in call: Based on selection criteria in Section 4.2.2, LTE Band 41 PC3, antenna F in DSI=1, having the lowest P_{limit} among all technologies and bands (test case 6 in Table 5-2), is selected for performing the call drop test in conducted power setup.
3. Technologies and bands for change in technology/band/antenna: Based on selection criteria in Section 4.2.3, test case 7 in Table 5-2 is selected for handover test from a technology/band within one technology group (LTE Band 41 PC3, DSI=1, antenna F), to a technology/band in different antenna within another technology group (WCDMA Band 5, DSI=1, antenna E) in conducted power setup.
4. Technologies and bands for change in time-window: Based on selection criteria in Section 4.2.6, for a given DSI=0, test case 8 in Table 5-2 is selected for time window switch between 30s window (WLAN Band 5GHz, Antenna E) and 100s window (LTE Band 5, Antenna E) in conducted power setup, and vice versa.
5. Technologies and bands for switch in SAR exposure (EN-DC): Based on selection criteria in Section 4.2.7 Scenario 1, test case 9 in Table 5-2 is selected for SAR exposure switching test in one of the supported simultaneous WWAN transmission scenario, i.e., LTE + Sub6 NR active in the same 100s time window, in conducted power setup. Based on selection criteria in Section 4.2.7 Scenario 2, test case 10 in Table 5-2 is selected for SAR exposure switching test in one of the supported simultaneous WWAN transmission scenario, i.e., LTE + Sub6 NR active in different time window (100s to 60s time window), in conducted power setup.
6. Technologies and bands for switch in exposure category: Based on selection criteria in Section 4.2.8, test case 11 in Table 5-2 is selected for switch in exposure category test by establishing a call in NR Band n77 antenna F in DSI=1 (head exposure) and then handing over to DSI=0 (non-head exposure) scenario in conducted power setup, and vice versa.
7. Technologies and bands for switch in SAR exposure (WLAN DBS): Based on selection criteria in Section 4.2.7, test case 12 in Table 5-2 is selected for SAR exposure switching test in one of the supported simultaneous DBS WLAN transmission scenario, i.e., WLAN + WLAN active in the same 30s time window, in conducted power setup.
8. Technologies and bands for system level compliance continuity: Based on selection criteria in Section 4.2.9, test case 13 in Table 5-2 is selected for system level compliance continuity test by establishing a

© 2025 Element

Unless otherwise specified, no part of this report may be reproduced or utilized in any part, form or by any means, electronic or mechanical, including photocopying and microfilm, without permission in writing from Element. If you have any questions or have an enquiry about obtaining additional rights to this report or assembly of contents thereof, please contact CT.INFO@ELEMENT.COM.

call in LTE Band 66 (antenna F, DSI = 0) and then handing over to WLAN 5GHz (antenna E, DSI = 0), and Bluetooth 2.4 (antenna G, DSI = 0) in conducted power setup.

Note: All switching and EN-DC test cases (#7 - #13) were done with modes/bands within the same antenna group.

Note: System level compliance continuity was performed with USB disconnected from DUT per Qualcomm 80-W2112-5 RevYF guidance.

5.2 EFS v24 Verification

Per Qualcomm's 80-w2112-5 document, embedded file system (EFS) version 24 products are required to be verified for Smart Tx generation for relevant MCC settings. It was confirmed that this DUT contains embedded file system (EFS) version 24 configured for Smart Tx second generation (GEN2) for Sub6 with MCC settings for the US market.

EFS v24 Generation	MCC
GEN2_Sub6	310

© 2025 Element

Unless otherwise specified, no part of this report may be reproduced or utilized in any part, form or by any means, electronic or mechanical, including photocopying and microfilm, without permission in writing from Element. If you have any questions or have an enquiry about obtaining additional rights to this report or assembly of contents thereof, please contact CT.INFO@ELEMENT.COM.

6 CONDUCTED POWER MEASUREMENT FOR SUB-6 SMART TRANSMIT FEATURE VALIDATION

6.1 Conducted Power Measurement Setup

Legacy test setup

The Rohde & Schwarz CMW500 callbox was used in this test. The test setup schematic is shown in Figure 6-1a (Appendix A – Test Setup Photo 1, 2, and 3) for measurements with a single antenna of DUT and in Figure 6-1b (Appendix A – Test Setup Photo 5) for measurements involving antenna switch. For single antenna measurement, one port (RF1 COM) of the callbox is connected to the RF port of the DUT using a directional coupler. For technology/band/antenna switch measurement, one port (RF1 COM) of the callbox used for signaling two different technologies is connected to a combiner, which is in turn connected to a directional coupler. The other end of the directional coupler is connected to a splitter to connect to two RF ports of the DUT corresponding to the two antennas of interest. In the setups, power meter is used to tap the directional coupler for measuring the conducted output power of the DUT. For all legacy conducted tests, only RF1 COM port of the callbox is used to communicate with the DUT.

All the path losses from RF port of DUT to the callbox RF COM port and to the power meter are calibrated and automatically entered as offsets in the callbox and the power meter via test scripts on the PC used to control callbox and power meter

Sub6 NR test setup:

The Anritsu MT8000A callbox was used in this test. The test setup schematic is the same as the Legacy Test Setup shown in Figure 6-1a (Appendix A – Test Setup Photo 4). One port of the callbox is connected to the RF port of the DUT using a directional coupler. In the setup, the power meter is used to tap the directional coupler for measuring the conducted output power of the DUT.

All the path losses from RF port of DUT to the callbox RF COM port and to the power meter are calibrated and automatically entered as offsets in the callbox and the power meter via test scripts on the PC used to control callbox and power meter.

LTE+Sub6 NR test setup:

LTE conducted port and Sub6 NR conducted port are different on this EUT, therefore, the LTE and Sub6 NR signals for power meter measurement are performed on separate paths as shown below in Figure 6-1c. (Appendix A – Test Setup Photo 7).

All the path losses from RF port of DUT to the callbox RF COM port and to the power meter are calibrated and automatically entered as offsets in the callbox and the power meter via test scripts on the PC used to control callbox and power meter.

WLAN SISO test setup:

The Rohde & Schwarz CMW500 callbox was used in this test. The test setup schematic is shown in Figure 6-1d (Appendix A – Test Setup Photo 4) and Figure 6-1d (Appendix A – Test Setup Photo 6).

All the path losses from RF port of DUT to the callbox RF COM port and to the power meter are calibrated and automatically entered as offsets in the callbox and the power meter via test scripts on the PC used to control callbox and power meter.

© 2025 Element

Unless otherwise specified, no part of this report may be reproduced or utilized in any part, form or by any means, electronic or mechanical, including photocopying and microfilm, without permission in writing from Element. If you have any questions or have an enquiry about obtaining additional rights to this report or assembly of contents thereof, please contact CT.INFO@ELEMENT.COM.

WLAN DBS test setup:

The Rohde & Schwarz CMW500 callbox was used in this test. WLAN 2.4GHz port and WLAN 6GHz conducted ports are different on this EUT, therefore, the WLAN signals for power meter measurement are performed on separate paths as shown below in Figure 6-1d (Appendix A – Test Setup Photo 8).

All the path losses from RF port of DUT to the callbox RF COM port and to the power meter are calibrated and automatically entered as offsets in the callbox and the power meter via test scripts on the PC used to control callbox and power meter.

System continuity test setup:

The Rohde & Schwarz CMW500 callbox was used in this test. WWAN conducted port and BT conducted port, and WLAN conducted port are separate on this EUT. Therefore, the WWAN, WLAN, and BT signals for power meter measurement are performed on paths shown below in Figure 6-1f (Appendix A – Test Setup Photo 9).

All the path losses from RF port of DUT to the callbox RF COM port and to the power meter are calibrated and automatically entered as offsets in the callbox and the power meter via test scripts on the PC used to control callbox and power meter.

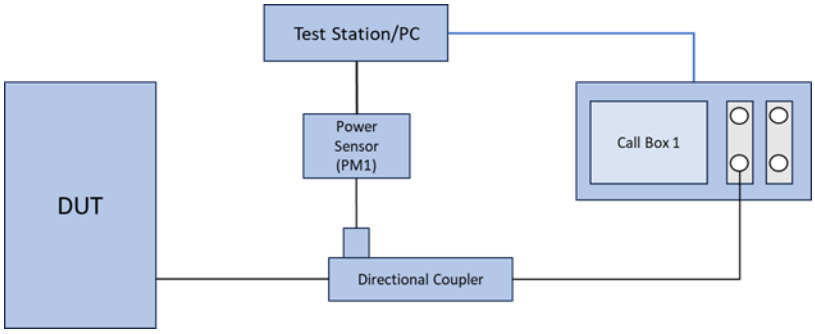

(a) Appendix A – Test Setup Photo 1, 2, 3

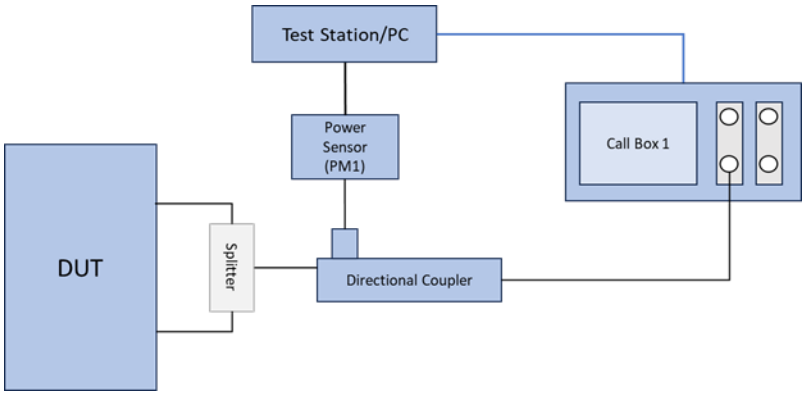

(b) Appendix A – Test Setup Photo 5

© 2025 Element
REV 1.0
04/06/2020
Unless otherwise specified, no part of this report may be reproduced or utilized in any part, form or by any means, electronic or mechanical, including photocopying and microfilm, without permission in writing from Element. If you have any questions or have an enquiry about obtaining additional rights to this report or assembly of contents thereof, please contact CT.INFO@ELEMENT.COM.

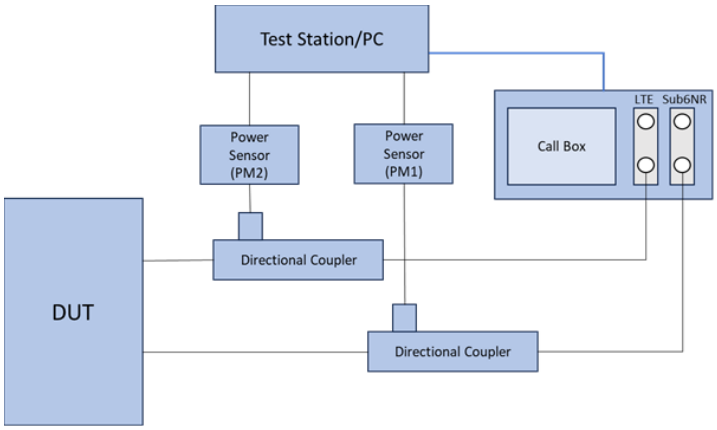

(c) Appendix A – Test Setup Photo 7

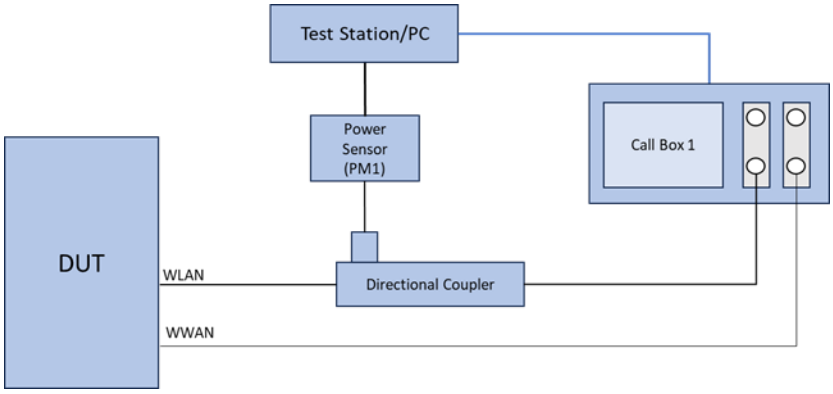

(d) Appendix A – Test Setup Photo 4

© 2025 Element

Unless otherwise specified, no part of this report may be reproduced or utilized in any part, form or by any means, electronic or mechanical, including photocopying and microfilm, without permission in writing from Element. If you have any questions or have an enquiry about obtaining additional rights to this report or assembly of contents thereof, please contact CT.INFO@ELEMENT.COM.

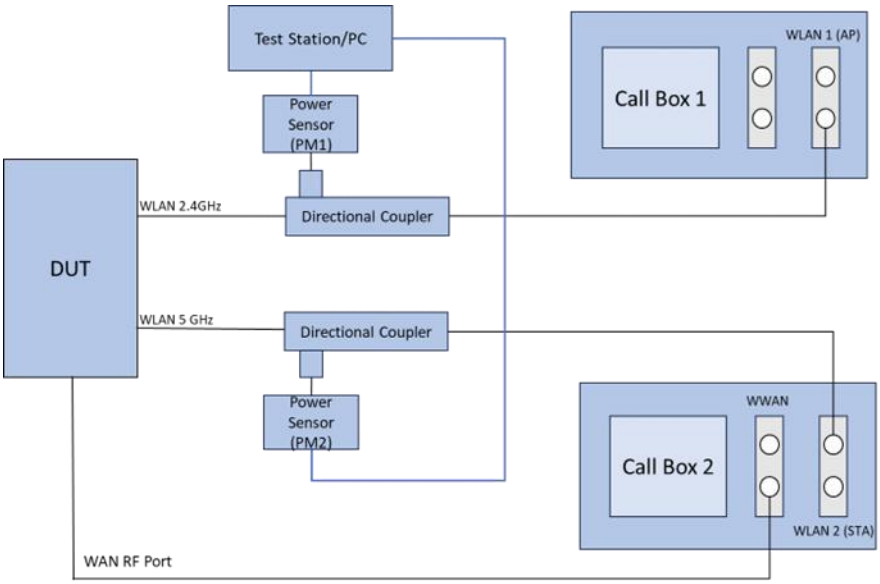

(e) Appendix A – Test Setup Photo 8

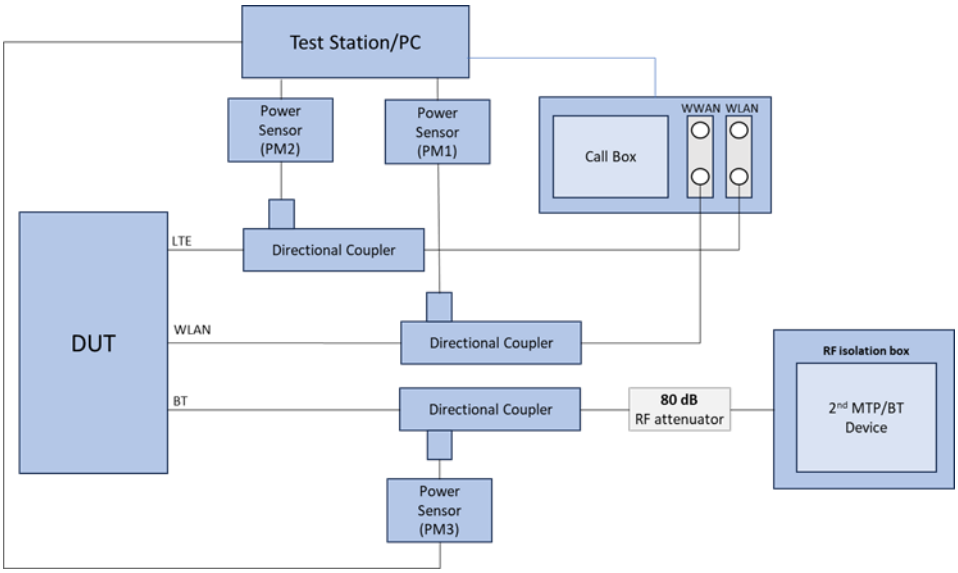

(f) Appendix A – Test Setup Photo 9

© 2025 Element

Unless otherwise specified, no part of this report may be reproduced or utilized in any part, form or by any means, electronic or mechanical, including photocopying and microfilm, without permission in writing from Element. If you have any questions or have an enquiry about obtaining additional rights to this report or assembly of contents thereof, please contact CT.INFO@ELEMENT.COM.

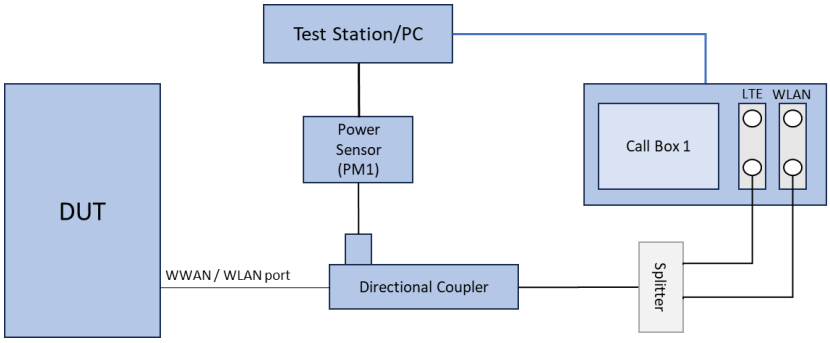

(g) Appendix A – Test Setup Photo 6

Figure 6-1
Conducted power measurement setup

Both the callbox and power meter are connected to the PC using GPIB cables. Two test scripts are custom made for automation, and the test duration set in the test scripts is 500 seconds.

For time-varying Tx power measurement, the PC runs the 1st test script to send GPIB commands to control the callbox's requested power versus time, while at the same time to record the conducted power measured at DUT RF port using the power meter. The commands sent to the callbox to request power are:

- 0dBm for 100 seconds
- test sequence 1 or test sequence 2 (defined in Section 4.1 and generated in Section 4.2.1), for 360 seconds.
- stay at the last power level of test sequence 1 or test sequence 2 for the remaining time.

Power meter readings are periodically recorded every 100ms. A running average of this measured Tx power over 100 seconds is performed in the post-data processing to determine the 100s-time averaged power.

For call drop, technology/band/antenna switch, and DSI switch tests, after the call is established, the callbox is set to request the DUT's Tx power at 0dBm for 100 seconds while simultaneously starting the 2nd test script runs at the same time to start recording the Tx power measured at DUT RF port using the power meter. After the initial 100 seconds since starting the Tx power recording, the callbox is set to request maximum power from the DUT for the rest of the test. Note that the call drop/re-establish, or technology/band/antenna switch or DSI switch is manually performed when the Tx power of DUT is at $P_{reserve}$ level. See Section 4.3 for detailed test procedure of call drop test, technology/band/antenna switch test and DSI switch test.

6.2 Time-varying Tx Power

The measurement setup is shown in Figure 6-1a.The purpose of the time-varying Tx power measurement is to demonstrate the effectiveness of power limiting enforcement and that the time-averaged Tx power when represented in time-averaged 1gSAR or 10gSAR values does not exceed FCC limit as shown in Eq. (1a) and (1b), rewritten below:

$$1g_or_10gSAR(t) = \frac{conducted_Tx_power(t)}{conducted_Tx_power_P_{limit}} * 1g_or_10gSAR_P_{limit} \qquad (1a)$$

© 2025 Element

Unless otherwise specified, no part of this report may be reproduced or utilized in any part, form or by any means, electronic or mechanical, including photocopying and microfilm, without permission in writing from Element. If you have any questions or have an enquiry about obtaining additional rights to this report or assembly of contents thereof, please contact CT.INFO@ELEMENT.COM.

$$\frac{\frac{1}{T_{SAR}}\int_{t-T_{SAR}}^{t} 1g_or_10gSAR(t)dt}{FCC\ SAR\ limit} \leq 1 \qquad (1b)$$

where, $conducted_Tx_power(t)$, $conducted_Tx_power_P_{limit}$, and $1g_or_10gSAR_P_{limit}$ correspond to the measured instantaneous conducted Tx power, measured conducted Tx power at P_{limit}, and measured *1gSAR* and *10gSAR* values at P_{limit} reported in Part 1 test (listed in Table 5-2 of this report as well).

Following the test procedure in Section 4.3.1, the conducted Tx power measurement for all selected configurations are reported in this section. In all the conducted Tx power plots, the green curve represents time-averaged power and red line represents the conducted power limit that corresponds to FCC limit of 1.6 W/kg for 1gSAR or 4.0 W/kg for 10gSAR.

Similarly, in all the 1g or 10gSAR plots (when converted using Eq. (1a)), the green curve represents the 100s/60s-time averaged 1gSAR or 10gSAR value calculated based on instantaneous 1gSAR or 10gSAR; and the red line limit represents the FCC limit of 1.6 W/kg for 1gSAR or 4.0 W/kg for 10gSAR.

Time-varying Tx power measurements were conducted on test cases #1 ~ #5 in Table 5-2, by generating test sequence 1 and test sequence 2 given in APPENDIX B: using measured P_{limit} and measured P_{max} (last two columns of Table 5-2) for each of these test cases. Measurement results for test cases #1 ~ #5 are given in Sections 6.2.1-6.2.5.

© 2025 Element

Unless otherwise specified, no part of this report may be reproduced or utilized in any part, form or by any means, electronic or mechanical, including photocopying and microfilm, without permission in writing from Element. If you have any questions or have an enquiry about obtaining additional rights to this report or assembly of contents thereof, please contact CT.INFO@ELEMENT.COM.

6.2.1 GSM/GPRS/EDGE 850, Antenna E

Test result for test sequence 1:

Time-averaged conducted Tx power is converted/calculated into time-averaged 1gSAR using Equation (1a) and plotted below to demonstrate that the time-averaged 1gSAR versus time does not exceed the FCC limit of 1.6 W/kg for 1gSAR:

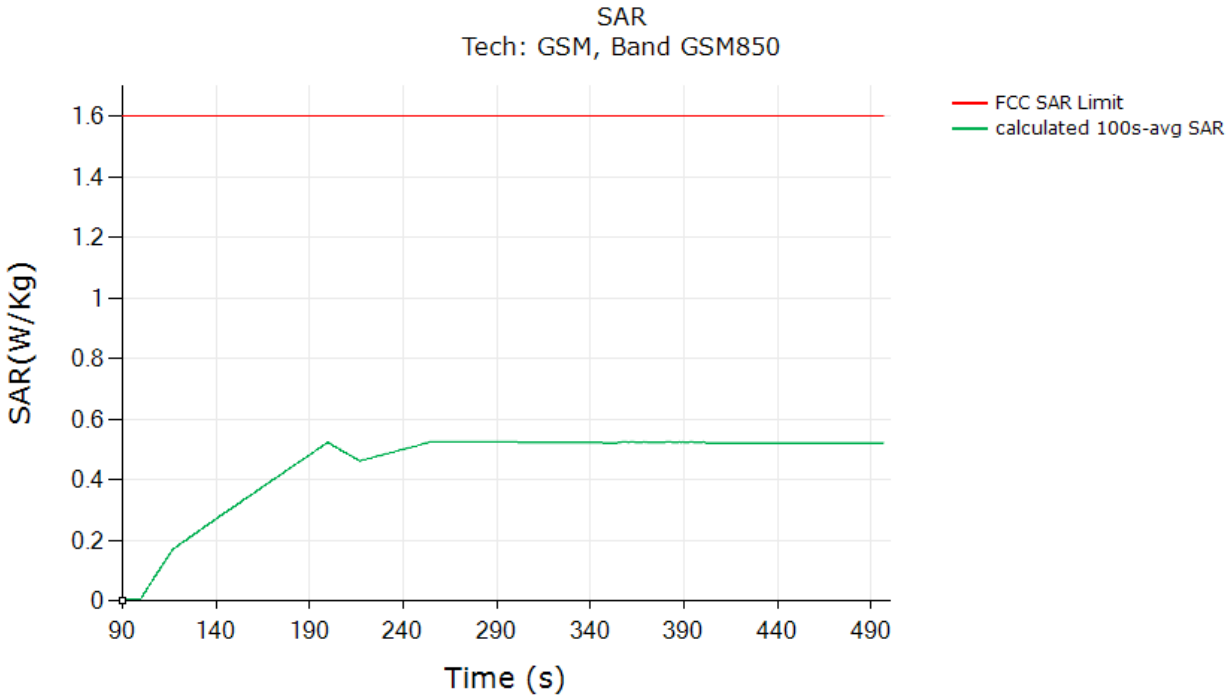

	(W/kg)
FCC 1gSAR limit	1.6
Max 100s-time averaged 1gSAR (green curve)	0.527
Validated: Max time averaged SAR (green curve) is within 1 dB device uncertainty of measured SAR at P_{limit} (worst case SAR at Plim column in Table 5-2).	

© 2025 Element
REV 1.0
04/06/2020
Unless otherwise specified, no part of this report may be reproduced or utilized in any part, form or by any means, electronic or mechanical, including photocopying and microfilm, without permission in writing from Element. If you have any questions or have an enquiry about obtaining additional rights to this report or assembly of contents thereof, please contact CT.INFO@ELEMENT.COM.

Test result for test sequence 2:

Time-averaged conducted Tx power is converted/calculated into time-averaged 1gSAR using Equation (1a) and plotted below to demonstrate that the time-averaged 1gSAR versus time does not exceed the FCC limit of 1.6 W/kg for 1gSAR:

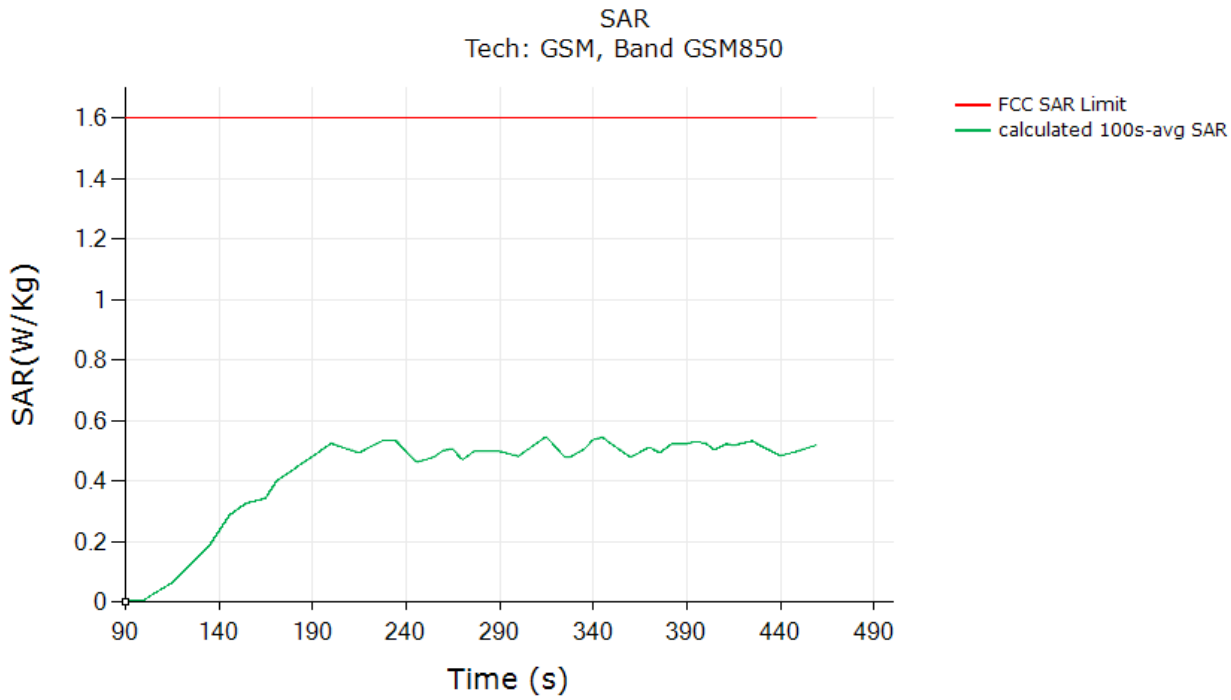

	(W/kg)
FCC 1gSAR limit	1.6
Max 100s-time averaged 1gSAR (green curve)	0.546
Validated: Max time averaged SAR (green curve) is within 1 dB device uncertainty of measured SAR at P_{limit} (worst case SAR at Plim column in Table 5-2).	

© 2025 Element

Unless otherwise specified, no part of this report may be reproduced or utilized in any part, form or by any means, electronic or mechanical, including photocopying and microfilm, without permission in writing from Element. If you have any questions or have an enquiry about obtaining additional rights to this report or assembly of contents thereof, please contact CT.INFO@ELEMENT.COM.

6.2.2 WCDMA Band 4, Antenna A

Test result for test sequence 1:

Time-averaged conducted Tx power is converted/calculated into time-averaged 1gSAR using Equation (1a) and plotted below to demonstrate that the time-averaged 1gSAR versus time does not exceed the FCC limit of 1.6 W/kg for 1gSAR:

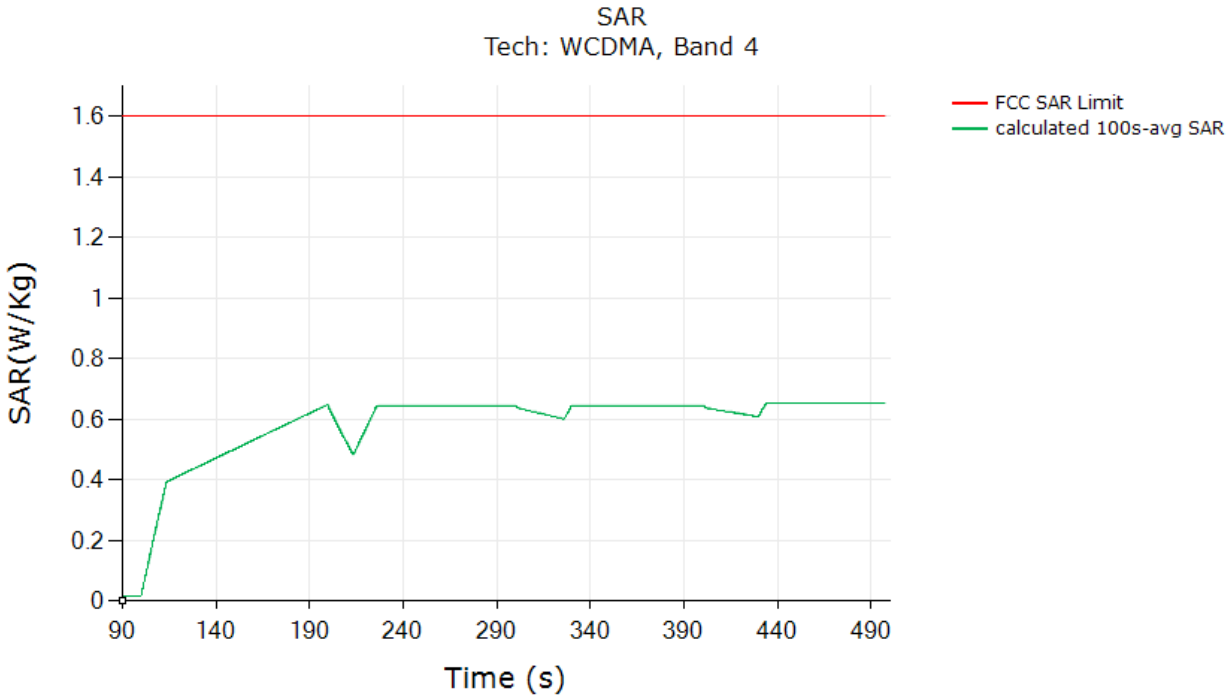

	(W/kg)
FCC 1gSAR limit	1.6
Max 100s-time averaged 1gSAR (green curve)	0.652
Validated: Max time averaged SAR (green curve) is within 1 dB device uncertainty of measured SAR at P_{limit} (worst case SAR at Plim column in Table 5-2).	

© 2025 Element
REV 1.0
04/06/2020
Unless otherwise specified, no part of this report may be reproduced or utilized in any part, form or by any means, electronic or mechanical, including photocopying and microfilm, without permission in writing from Element. If you have any questions or have an enquiry about obtaining additional rights to this report or assembly of contents thereof, please contact CT.INFO@ELEMENT.COM.

Test result for test sequence 2:

Time-averaged conducted Tx power is converted/calculated into time-averaged 1gSAR using Equation (1a) and plotted below to demonstrate that the time-averaged 1gSAR versus time does not exceed the FCC limit of 1.6 W/kg for 1gSAR:

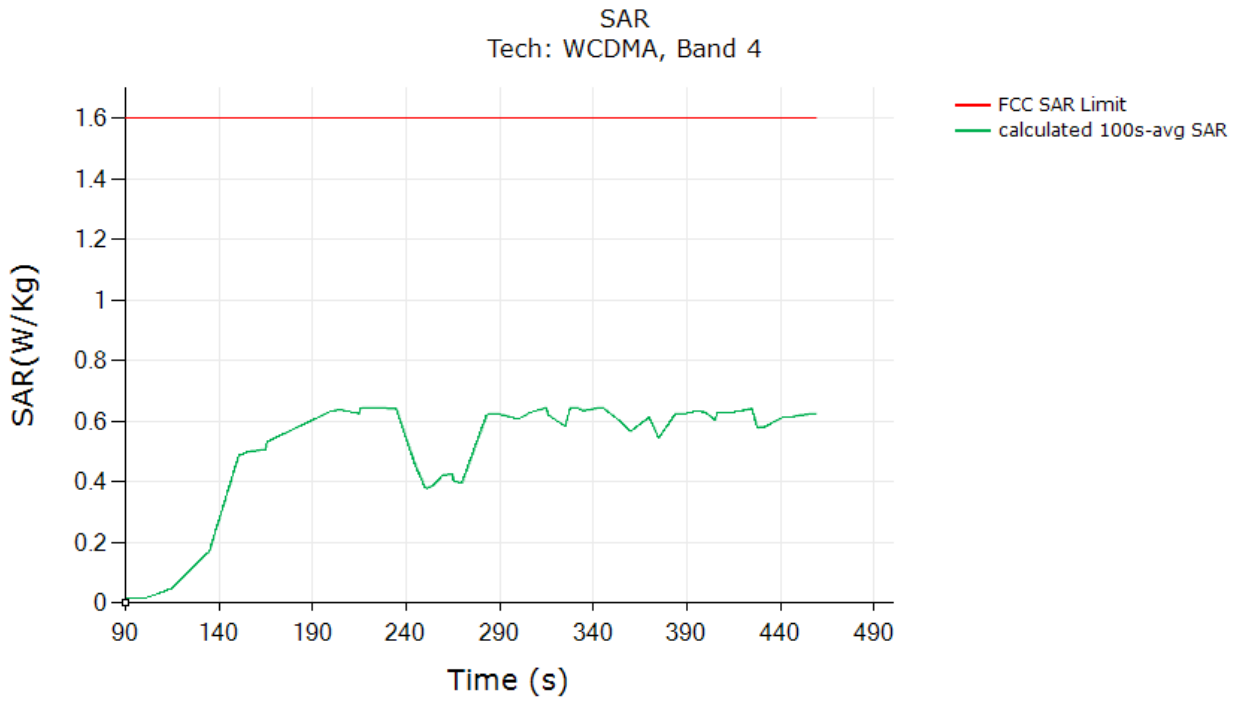

	(W/kg)
FCC 1gSAR limit	1.6
Max 100s-time averaged 1gSAR (green curve)	0.645
Validated: Max time averaged SAR (green curve) is within 1 dB device uncertainty of measured SAR at P_{limit} (worst case SAR at Plim column in Table 5-2).	

© 2025 Element
REV 1.0
04/06/2020
Unless otherwise specified, no part of this report may be reproduced or utilized in any part, form or by any means, electronic or mechanical, including photocopying and microfilm, without permission in writing from Element. If you have any questions or have an enquiry about obtaining additional rights to this report or assembly of contents thereof, please contact CT.INFO@ELEMENT.COM.

6.2.3 LTE Band 41 PC3, Antenna F

Test result for test sequence 1:

Time-averaged conducted Tx power is converted/calculated into time-averaged 1gSAR using Equation (1a) and plotted below to demonstrate that the time-averaged 1gSAR versus time does not exceed the FCC limit of 1.6 W/kg for 1gSAR:

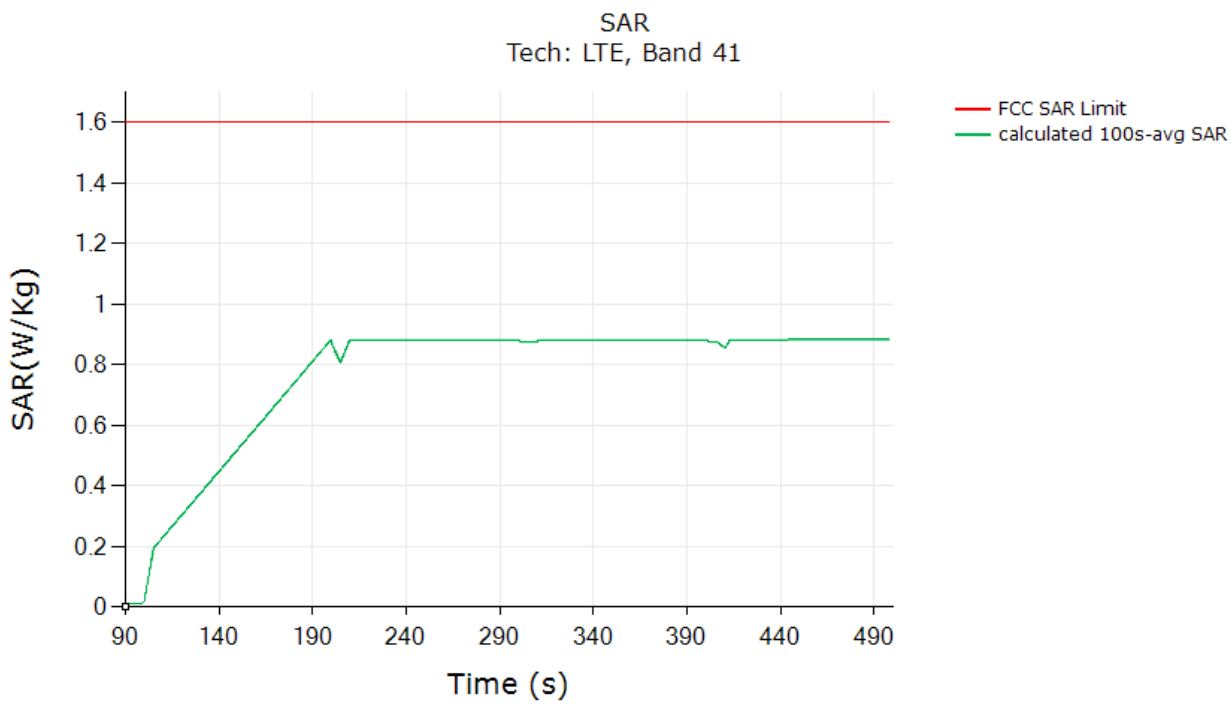

	(W/kg)
FCC 1gSAR limit	1.6
Max 100s-time averaged 1gSAR (green curve)	0.883
Validated: Max time averaged SAR (green curve) is within 1 dB device uncertainty of measured SAR at P_{limit} (worst case SAR at Plim column in Table 5-2).	

© 2025 Element
REV 1.0
04/06/2020
Unless otherwise specified, no part of this report may be reproduced or utilized in any part, form or by any means, electronic or mechanical, including photocopying and microfilm, without permission in writing from Element. If you have any questions or have an enquiry about obtaining additional rights to this report or assembly of contents thereof, please contact CT.INFO@ELEMENT.COM.

Test result for test sequence 2:

Time-averaged conducted Tx power is converted/calculated into time-averaged 1gSAR using Equation (1a) and plotted below to demonstrate that the time-averaged 1gSAR versus time does not exceed the FCC limit of 1.6 W/kg for 1gSAR:

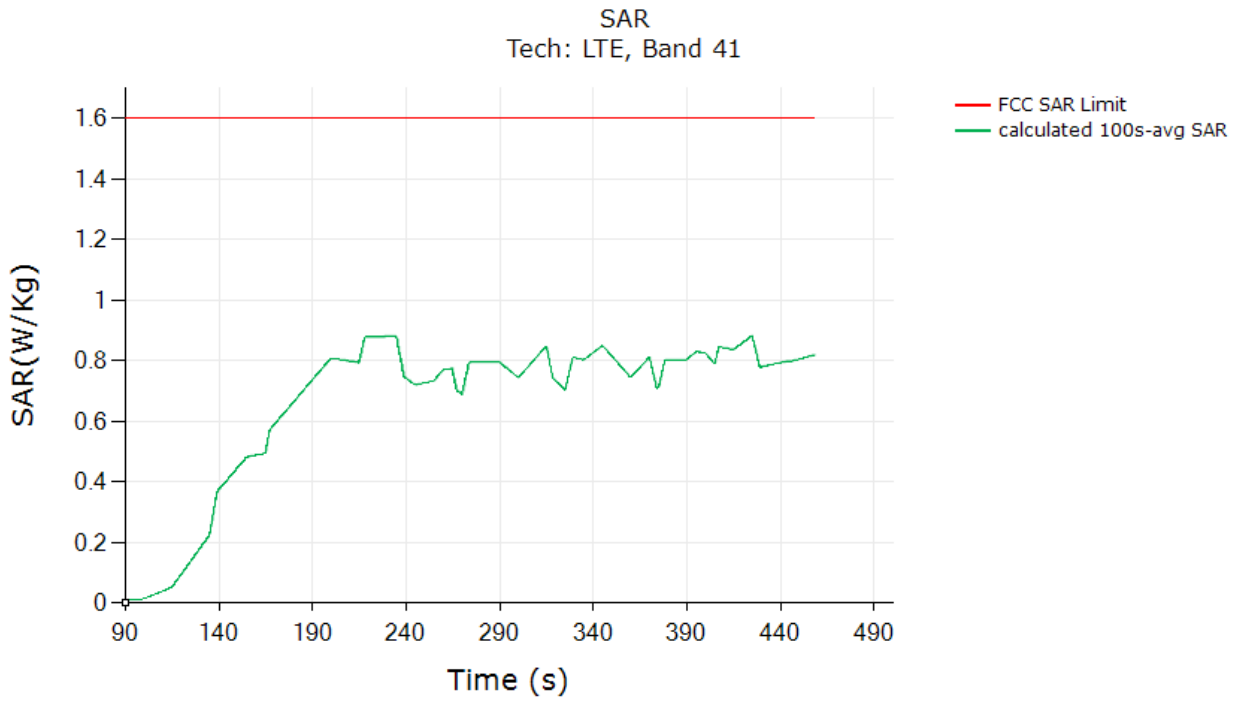

	(W/kg)
FCC 1gSAR limit	1.6
Max 100s-time averaged 1gSAR (green curve)	0.882
Validated: Max time averaged SAR (green curve) is within 1 dB device uncertainty of measured SAR at P_{limit} (worst case SAR at Plim column in Table 5-2).	

© 2025 Element
REV 1.0
04/06/2020
Unless otherwise specified, no part of this report may be reproduced or utilized in any part, form or by any means, electronic or mechanical, including photocopying and microfilm, without permission in writing from Element. If you have any questions or have an enquiry about obtaining additional rights to this report or assembly of contents thereof, please contact CT.INFO@ELEMENT.COM.

6.2.4 NR n25 SA, Antenna A

Test result for test sequence 1:

Time-averaged conducted Tx power is converted/calculated into time-averaged 1gSAR using Equation (1a) and plotted below to demonstrate that the time-averaged 1gSAR versus time does not exceed the FCC limit of 1.6 W/kg for 1gSAR:

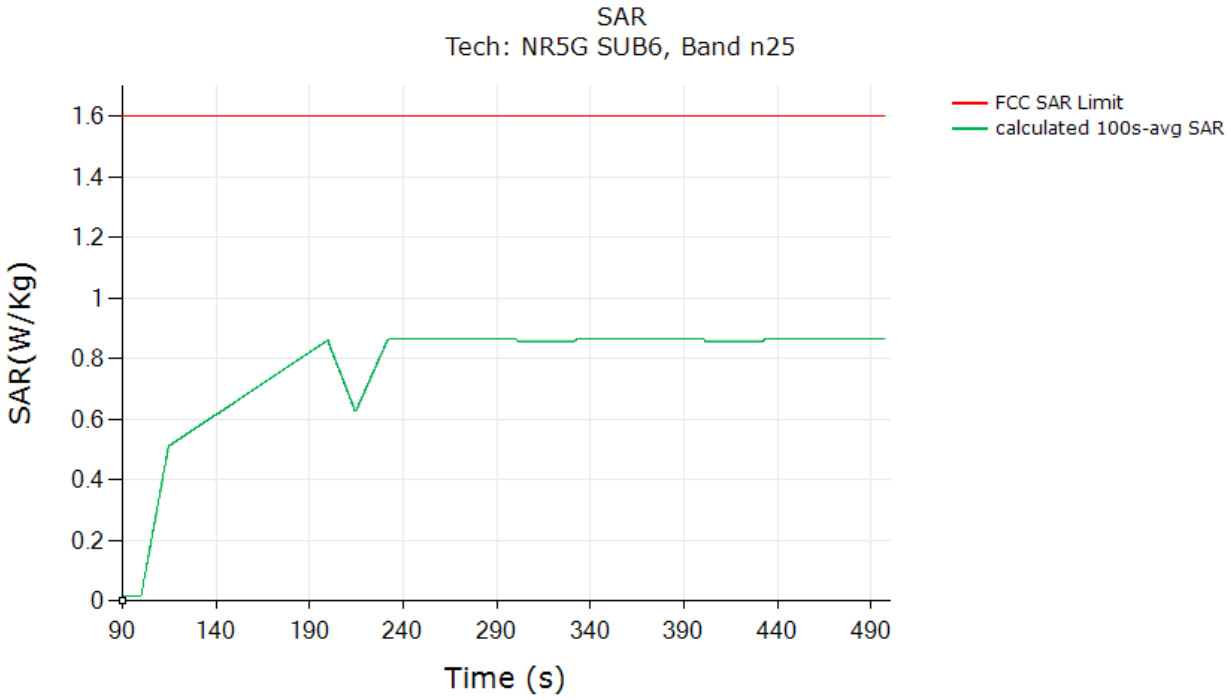

	(W/kg)
FCC 1gSAR limit	1.6
Max 100s-time averaged 1gSAR (green curve)	0.865
Validated: Max time averaged SAR (green curve) is within 1 dB device uncertainty of measured SAR at P_{limit} (worst case SAR at Plim column in Table 5-2).	

© 2025 Element
REV 1.0
04/06/2020
Unless otherwise specified, no part of this report may be reproduced or utilized in any part, form or by any means, electronic or mechanical, including photocopying and microfilm, without permission in writing from Element. If you have any questions or have an enquiry about obtaining additional rights to this report or assembly of contents thereof, please contact CT.INFO@ELEMENT.COM.

Test result for test sequence 2:

Time-averaged conducted Tx power is converted/calculated into time-averaged 1gSAR using Equation (1a) and plotted below to demonstrate that the time-averaged 1gSAR versus time does not exceed the FCC limit of 1.6 W/kg for 1gSAR:

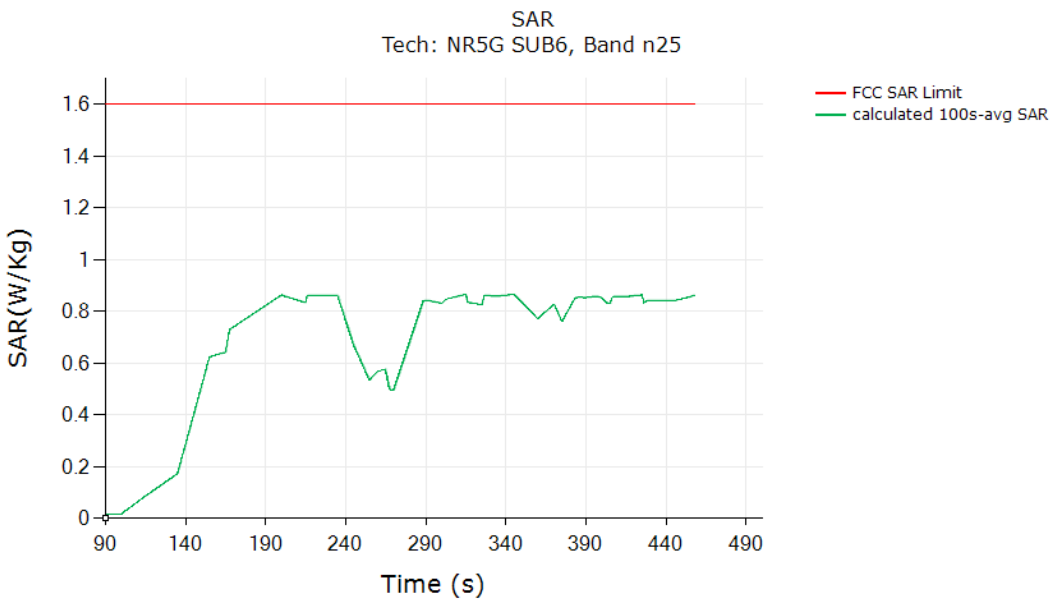

	(W/kg)
FCC 1gSAR limit	1.6
Max 100s-time averaged 1gSAR (green curve)	0.865
Validated: Max time averaged SAR (green curve) is within 1 dB device uncertainty of measured SAR at P_{limit} (worst case SAR at Plim column in Table 5-2).	

© 2025 Element

Unless otherwise specified, no part of this report may be reproduced or utilized in any part, form or by any means, electronic or mechanical, including photocopying and microfilm, without permission in writing from Element. If you have any questions or have an enquiry about obtaining additional rights to this report or assembly of contents thereof, please contact CT.INFO@ELEMENT.COM.

6.2.5 WLAN 5GHz, Antenna E

Test result for test sequence:

Time-averaged conducted Tx power is converted/calculated into time-averaged 1gSAR using Equation (1a) and plotted below to demonstrate that the time-averaged 1gSAR versus time does not exceed the FCC limit of 1.6 W/kg for 1gSAR:

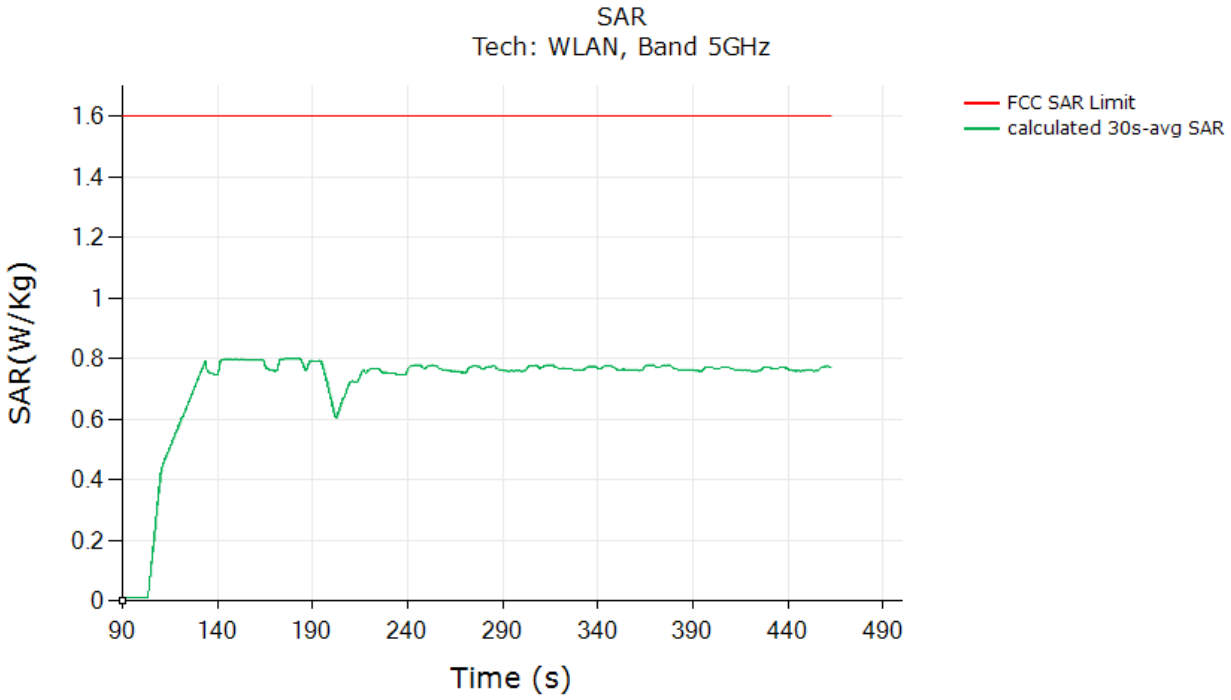

	(W/kg)
FCC 1gSAR limit	1.6
Max 30s-time averaged 1gSAR (green curve)	0.800
Validated: Max time averaged SAR (green curve) is within 1 dB device uncertainty of measured SAR at P_{limit} (worst case SAR at Plim column in Table 5-2).	

© 2025 Element
REV 1.0
04/06/2020
Unless otherwise specified, no part of this report may be reproduced or utilized in any part, form or by any means, electronic or mechanical, including photocopying and microfilm, without permission in writing from Element. If you have any questions or have an enquiry about obtaining additional rights to this report or assembly of contents thereof, please contact CT.INFO@ELEMENT.COM.

6.3 Change in Call

This test was measured LTE Band 41 PC3, Antenna F, DSI = 1, and with callbox requesting maximum power. The call drop was manually performed when the DUT is transmitting at $P_{reserve}$ level as shown in the plot below. The measurement setup is shown in Figure 6-1a. The detailed test procedure is described in Section 4.3.2.

Call drop test result:
Time-averaged conducted Tx power is converted/calculated into time-averaged 1gSAR using Equation (1a) and plotted below to demonstrate that the time-averaged 1gSAR versus time does not exceed the FCC limit of 1.6 W/kg for 1gSAR:

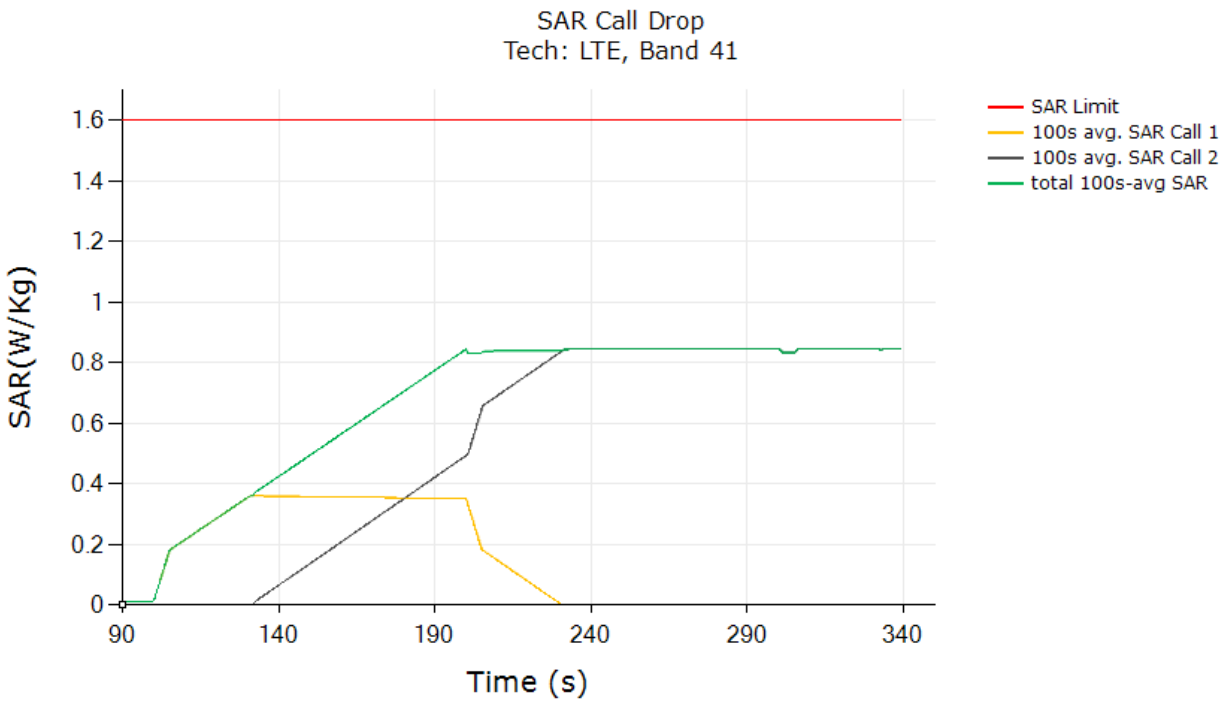

	(W/kg)
FCC 1gSAR limit	1.6
Max 100s-time averaged 1gSAR (green curve)	0.845
Validated	

The test result validated the continuity of power limiting in call change scenario.

© 2025 Element
REV 1.0
04/06/2020
Unless otherwise specified, no part of this report may be reproduced or utilized in any part, form or by any means, electronic or mechanical, including photocopying and microfilm, without permission in writing from Element. If you have any questions or have an enquiry about obtaining additional rights to this report or assembly of contents thereof, please contact CT.INFO@ELEMENT.COM.

6.4 Change in Technology/Band/Antenna

This test was conducted with callbox requesting maximum power, and with a technology switch from LTE Band 41 PC3, Antenna F, DSI = 1 to WCDMA Band 5, Antenna E, DSI = 1. Following procedure detailed in Section 4.3.3, and using the measurement setup shown in Figure 6-1(b), the technology/band switch was performed when the DUT is transmitting at $P_{reserve}$ level as shown in the plot below.

Test result for change in technology/band/antenna:

Time-averaged conducted Tx power measurement results were converted into time-averaged normalized SAR values using Equation (6a), (6b) and (6c), and plotted below to demonstrate that the time-averaged normalized SAR versus time does not exceed the normalized FCC limit of 1.0:

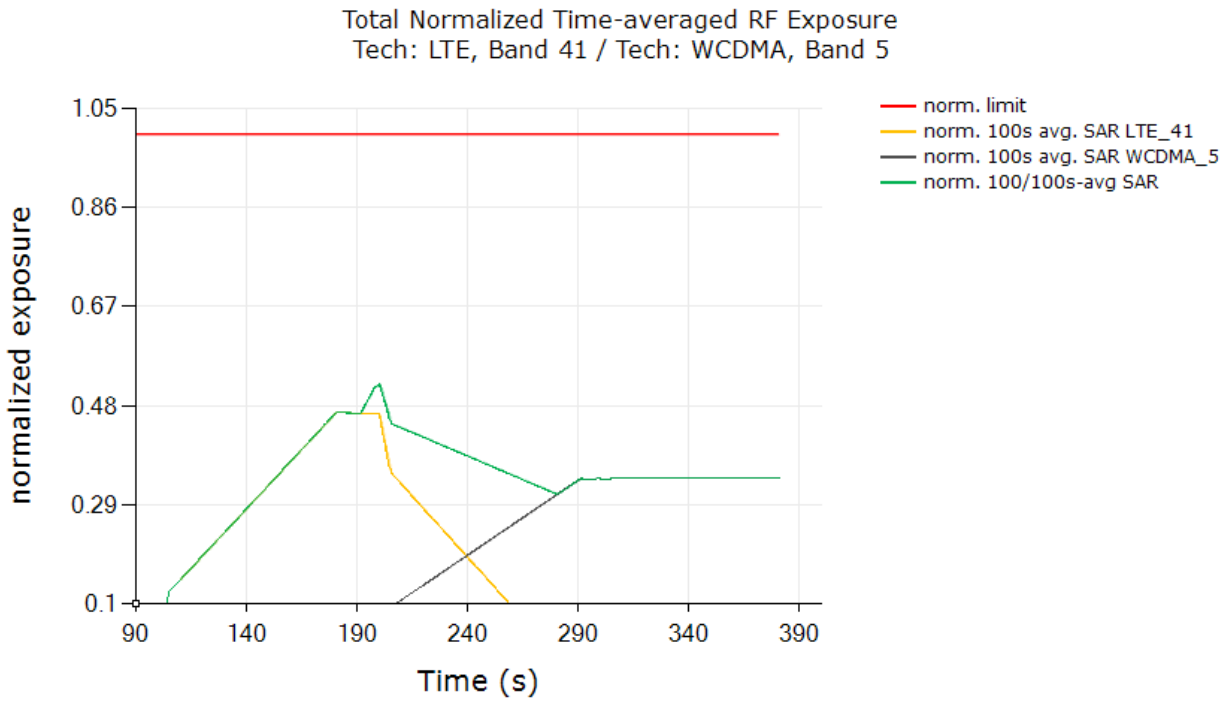

FCC normalized SAR limit	1.0
Max 100s-time averaged normalized SAR (green curve)	0.523
Validated	

The test result validated the continuity of power limiting in technology/band/antenna switch scenario.

© 2025 Element
REV 1.0
04/06/2020
Unless otherwise specified, no part of this report may be reproduced or utilized in any part, form or by any means, electronic or mechanical, including photocopying and microfilm, without permission in writing from Element. If you have any questions or have an enquiry about obtaining additional rights to this report or assembly of contents thereof, please contact CT.INFO@ELEMENT.COM.

6.5 Change in Time Window

This test was conducted with callbox requesting maximum power, and with time-window between LTE Band 5, Antenna E, DSI = 0 (100s window) and WLAN Band 5GHz, Antenna E, DSI = 0 (30s window). Following procedure detailed in Section 4.3.6, and using the measurement setup shown in Figure 6-1g, the time-window switch via tech/band/antenna switch was performed when the EUT is transmitting at $P_{reserve}$ level.

6.5.1 Test case 1: transition from LTE Band 5 to WLAN Band 5GHz (i.e., 100s to 30s), then back to LTE Band 5

Test result for change in time-window (from 100s to 30s to 100s):

All the conducted Tx power measurement results were converted into time-averaged normalized SAR values using Equation (7a), (7b) and (7c), and plotted below to demonstrate that the time-averaged normalized SAR versus time does not exceed the FCC limit of 1 unit. Equation (7a) is used to convert the Tx power of device to obtain 100s-averaged normalized SAR in LTE Band 5 as shown in black curve. Similarly, equation (7b) is used to obtain 30s-averaged normalized SAR in WLAN Band 5GHz as shown in orange curve. Equation (7c) is used to obtain total time-averaged normalized SAR as shown in green curve (i.e., sum of black and orange curves).

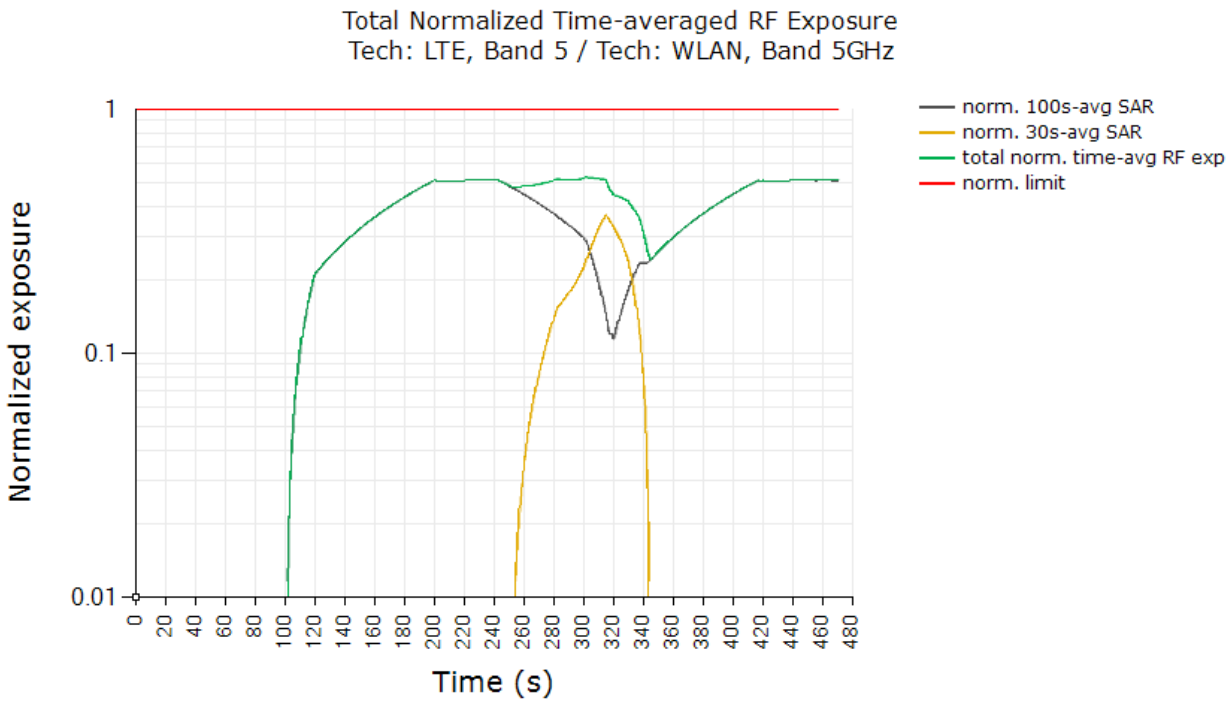

FCC normalized total exposure limit	1.0
Max time averaged normalized SAR (green curve)	0.527
Validated	

© 2025 Element
REV 1.0
04/06/2020
Unless otherwise specified, no part of this report may be reproduced or utilized in any part, form or by any means, electronic or mechanical, including photocopying and microfilm, without permission in writing from Element. If you have any questions or have an enquiry about obtaining additional rights to this report or assembly of contents thereof, please contact CT.INFO@ELEMENT.COM.

Plot Notes: Maximum power is requested by callbox for the entire duration of the test, with tech/band switches from 100s-to-30s window at ~245s time stamp, and from 30s-to-100s window at ~315s time stamp. Smart Transmit controls the Tx power during these time-window switches to ensure total time-averaged RF exposure, i.e., sum of black and orange curves given by equation (7c), is always compliant. In time-window switch test, at all times the total time-averaged normalized RF exposure (green curve) should not exceed normalized *SAR_design_target* + 1dB device uncertainty. In this test, with a maximum normalized SAR of 0.527 being ≤ 0.79 (= 1.0/1.6 + 1dB device uncertainty), the above test result validated the continuity of power limiting in time-window switch scenario.

6.5.2 Test case 2: transition from WLAN Band 5GHz to LTE Band 5 (i.e., 30s to 100s), then back to WLAN Band 5GHz

Test result for change in time-window (from 30s to 100s to 30s):

All the conducted Tx power measurement results were converted into time-averaged normalized SAR values using Equation (7a), (7b) and (7c), and plotted below to demonstrate that the time-averaged normalized SAR versus time does not exceed the FCC limit of 1 unit. Equation (7a) is used to convert the Tx power of device to obtain 30s-averaged normalized SAR in WLAN Band 5GHz as shown in black curve. Similarly, equation (7b) is used to obtain 100s-averaged normalized SAR in LTE Band 5 as shown in orange curve. Equation (7c) is used to obtain total time-averaged normalized SAR as shown in green curve (i.e., sum of black and orange curves).

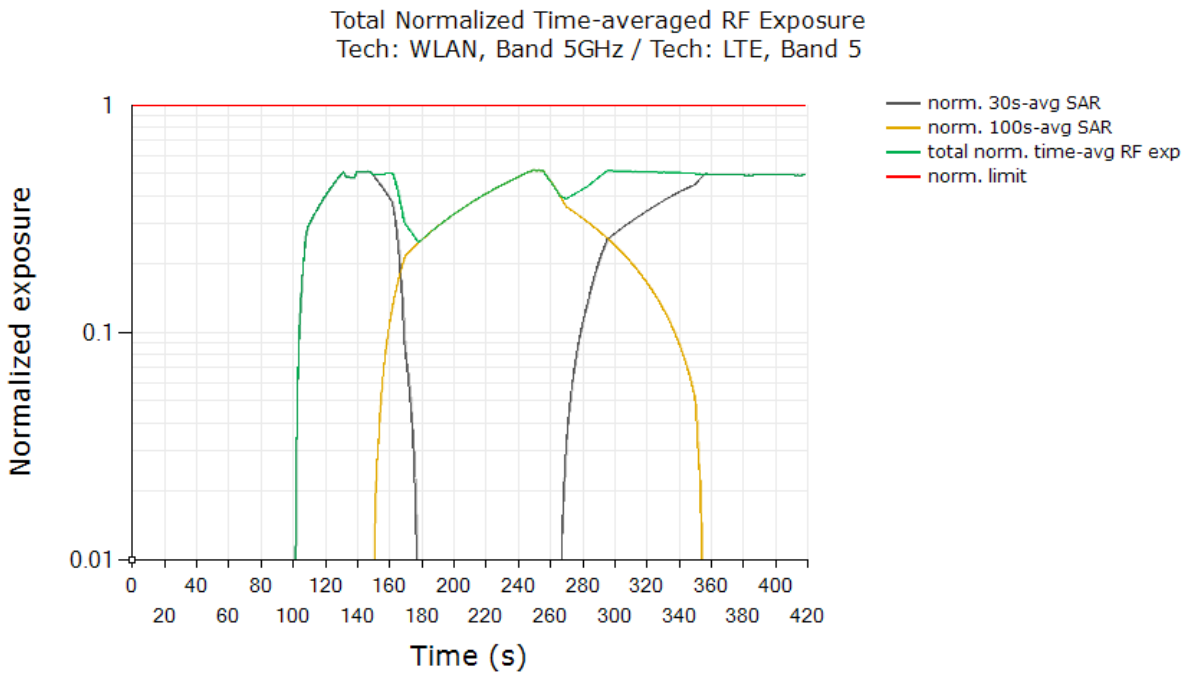

FCC normalized total exposure limit	1.0
Max time averaged normalized SAR (green curve)	0.520
Validated	

© 2025 Element
REV 1.0
04/06/2020
Unless otherwise specified, no part of this report may be reproduced or utilized in any part, form or by any means, electronic or mechanical, including photocopying and microfilm, without permission in writing from Element. If you have any questions or have an enquiry about obtaining additional rights to this report or assembly of contents thereof, please contact CT.INFO@ELEMENT.COM.

Plot Notes: Maximum power is requested by callbox for the entire duration of the test, with tech/band switches from 30s-to-100s window at ~149s time stamp, and from 100s-to-30s window at ~260s time stamp. Smart Transmit controls the Tx power during these time-window switches to ensure total time-averaged RF exposure, i.e., sum of black and orange curves given by equation (7c), is always compliant. In time-window switch test, at all times the total time-averaged normalized RF exposure (green curve) should not exceed normalized *SAR_design_target* + 1dB device uncertainty. In this test, with a maximum normalized SAR of 0.542 being ≤ 0.79 (= 1.0/1.6 + 1dB device uncertainty), the above test result validated the continuity of power limiting in time-window switch scenario.

6.6 SAR Exposure Switching WWAN EN-DC – Same Time-Window

This test was conducted with callbox requesting maximum power, and with the EUT in LTE Band 5 + Sub6 NR Band n66 call. Following procedure detailed in Section 4.3.7 and Appendix F.2, and using the measurement setup shown in Figure 6-1(c) since LTE and Sub6 NR are on different antenna ports, the SAR exposure switch measurement is performed with the EUT in various SAR exposure scenarios, i.e., in SAR_{sub6NR} only scenario (t =0s ~120s), SAR_{su6NR} + SAR_{LTE} scenario (t =120s ~ 240s) and SAR_{LTE} only scenario (t > 240s).

Plot Notes: All the conducted Tx power measurement results were converted into time-averaged normalized SAR values using Equation (7a), (7b) and (7c), and plotted below to demonstrate that the time-averaged normalized SAR versus time does not exceed the FCC limit of 1 unit. Equation (7a) is used to convert the LTE Tx power of device to obtain 100s-averaged normalized SAR in LTE Band 12 as shown in black curve. Similarly, equation (7b) is used to obtain 100s-averaged normalized SAR in Sub6 NR n66 as shown in orange curve. Equation (7c) is used to obtain total time-averaged normalized SAR as shown in green curve (i.e., sum of black and orange curves).

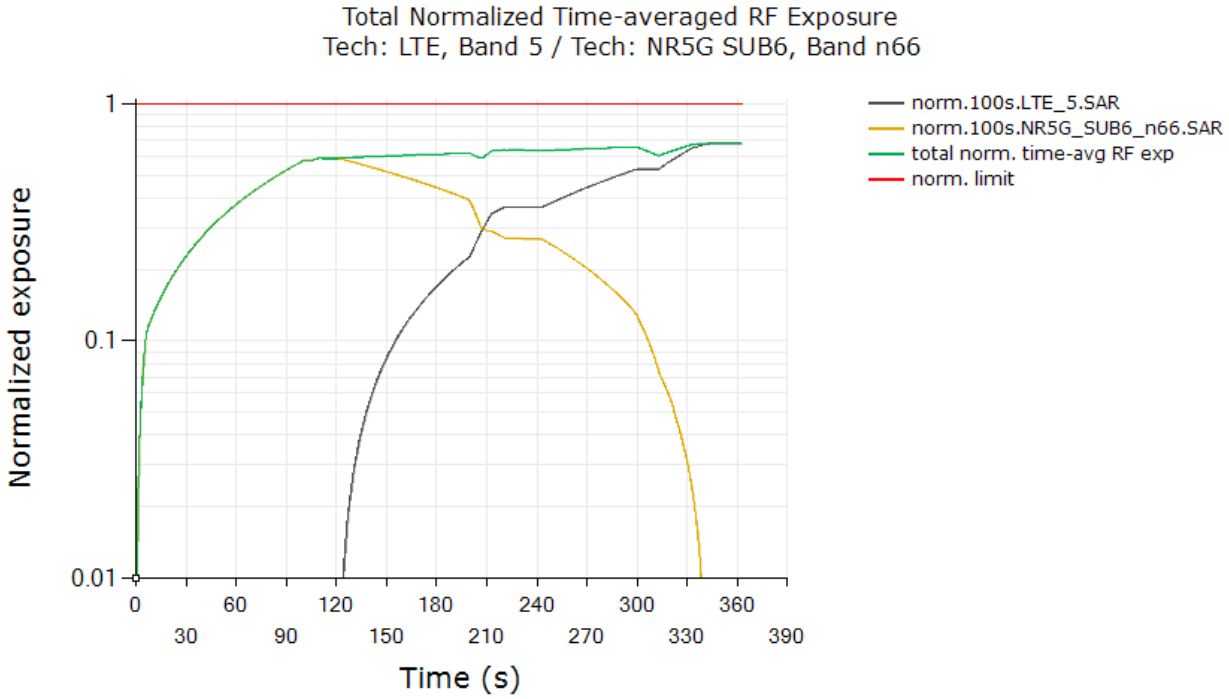

© 2025 Element

Unless otherwise specified, no part of this report may be reproduced or utilized in any part, form or by any means, electronic or mechanical, including photocopying and microfilm, without permission in writing from Element. If you have any questions or have an enquiry about obtaining additional rights to this report or assembly of contents thereof, please contact CT.INFO@ELEMENT.COM.

FCC normalized total exposure limit	1.0
Max time averaged normalized SAR (green curve)	0.681
Validated	

Plot Notes: Device starts predominantly in Sub6 NR SAR exposure scenario between 0s and 120s, and in LTE SAR + Sub6 NR SAR exposure scenario between 120s and 240s, and in predominantly in LTE SAR exposure scenario after t=240s. Here, Smart Transmit allocates a maximum of 100% of exposure margin (based on 3dB reserve margin setting) for Sub6 NR. This corresponds to a normalized 1gSAR exposure value = 100% * 0.787 W/kg measured SAR at Sub6 NR *Plimit* / 1.6W/kg limit = 0.492 ± 1dB device related uncertainty (see orange curve between 120s). For predominantly LTE SAR exposure scenario, maximum normalized 1gSAR exposure should correspond to 100% exposure margin * 0.858 W/kg measured SAR at LTE *Plimit* / 1.6W/kg limit = 0.526 ± 1dB device related uncertainty (see black curve after t = 240s). Additionally, in SAR exposure switch test, at all times the total time-averaged normalized RF exposure (green curve) should not exceed normalized *SAR_design_target* + 1dB device uncertainty. In this test, with a maximum normalized SAR of 0.681 being ≤ 0.79 (= 1.0/1.6 + 1dB device uncertainty), the above test result validated the continuity of power limiting in SAR exposure switch scenario.

6.7 SAR Exposure Switching WWAN EN-DC – Different Time-Window

This test was conducted with callbox requesting maximum power, and with the EUT in LTE Band 5 + Sub6 NR Band n77 call. Following procedure detailed in Section 4.3.7 and Appendix F.2, and using the measurement setup shown in Figure 6-1c since LTE and Sub6 NR are on different antenna ports, the SAR exposure switch measurement is performed with the EUT in various SAR exposure scenarios, i.e., in SAR_{sub6NR} only scenario (t =0s ~120s), SAR_{su6NR} + SAR_{LTE} scenario (t =120s ~ 240s) and SAR_{LTE} only scenario (t > 240s).

Plot Notes: All the conducted Tx power measurement results were converted into time-averaged normalized SAR values using Equation (7a), (7b) and (7c), and plotted below to demonstrate that the time-averaged normalized SAR versus time does not exceed the FCC limit of 1 unit. Equation (7a) is used to convert the LTE Tx power of device to obtain 100s-averaged normalized SAR in LTE Band 5 as shown in black curve. Similarly, equation (7b) is used to obtain 100s-averaged normalized SAR in Sub6 NR n77 as shown in orange curve. Equation (7c) is used to obtain total time-averaged normalized SAR as shown in green curve (i.e., sum of black and orange curves).

© 2025 Element
REV 1.0
04/06/2020
Unless otherwise specified, no part of this report may be reproduced or utilized in any part, form or by any means, electronic or mechanical, including photocopying and microfilm, without permission in writing from Element. If you have any questions or have an enquiry about obtaining additional rights to this report or assembly of contents thereof, please contact CT.INFO@ELEMENT.COM.

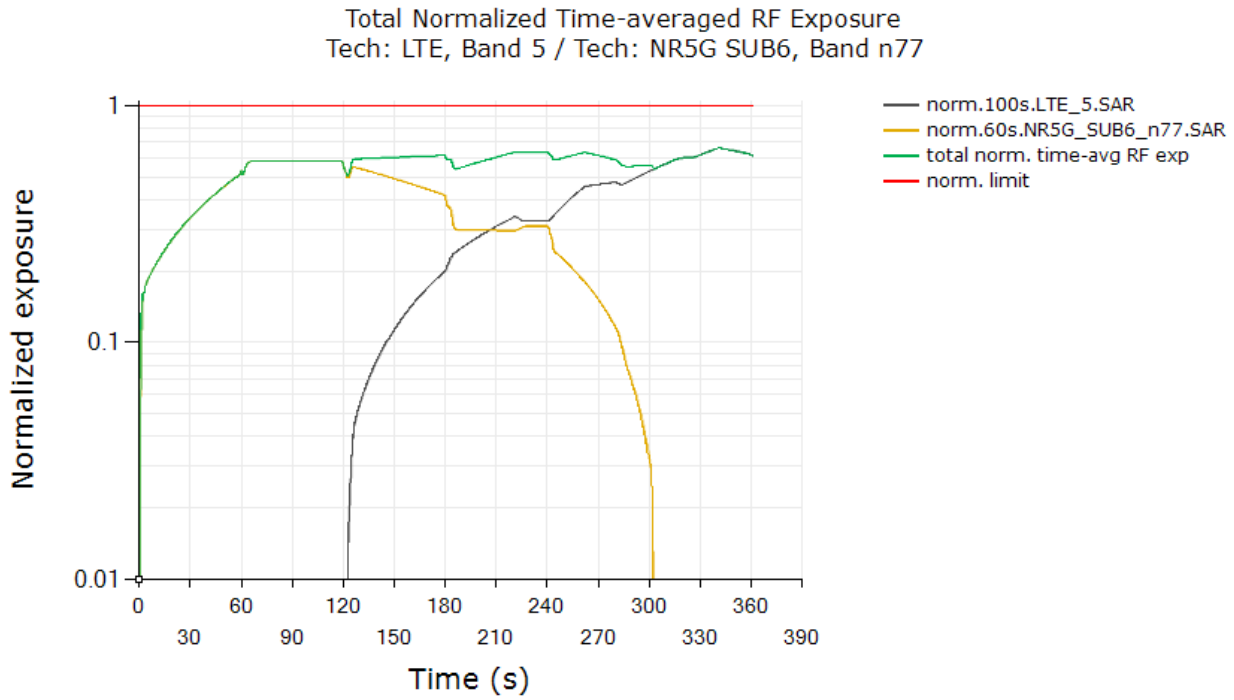

FCC normalized total exposure limit	1.0
Max time averaged normalized SAR (green curve)	0.662
Validated	

Plot Notes: Device starts predominantly in Sub6 NR SAR exposure scenario between 0s and 120s, and in LTE SAR + Sub6 NR SAR exposure scenario between 120s and 240s, and in predominantly in LTE SAR exposure scenario after t=240s. Here, Smart Transmit allocates a maximum of 100% of exposure margin (based on 3dB reserve margin setting) for Sub6 NR. This corresponds to a normalized 1gSAR exposure value = 100% * 0.716 W/kg measured SAR at Sub6 NR *Plimit* / 1.6W/kg limit = 0.447 ± 1dB device related uncertainty (see orange curve between 120s). For predominantly LTE SAR exposure scenario, maximum normalized 1gSAR exposure should correspond to 100% exposure margin * 0.858 W/kg measured SAR at LTE *Plimit* / 1.6W/kg limit = 0.536 ± 1dB device related uncertainty (see black curve after t = 240s). Additionally, in SAR exposure switch test, at all times the total time-averaged normalized RF exposure (green curve) should not exceed normalized *SAR_design_target* + 1dB device uncertainty. In this test, with a maximum normalized SAR of 0.662 being ≤ 0.79 (= 1.0/1.6 + 1dB device uncertainty), the above test result validated the continuity of power limiting in SAR exposure switch scenario.

6.8 Exposure Category Switch

This test was conducted with callbox requesting maximum power, and with exposure category switch between NR Band n77, Antenna F, DSI = 1 (Head) and NR Band n77, Antenna F, DSI = 0 (Non-Head), and vice versa. Following procedure detailed in Section 4.3.8 and using the measurement setup shown in Figure 6-1(a), the exposure category switch was performed when the EUT is transmitting at $P_{reserve}$ level.

© 2025 Element
REV 1.0
04/06/2020
Unless otherwise specified, no part of this report may be reproduced or utilized in any part, form or by any means, electronic or mechanical, including photocopying and microfilm, without permission in writing from Element. If you have any questions or have an enquiry about obtaining additional rights to this report or assembly of contents thereof, please contact CT.INFO@ELEMENT.COM.

6.8.1 Test case 1: Transition from NR Band n77 DSI=1 (Head) to NR Band n77 DSI=0 (Non-Head), then back to DSI=1 (Head)

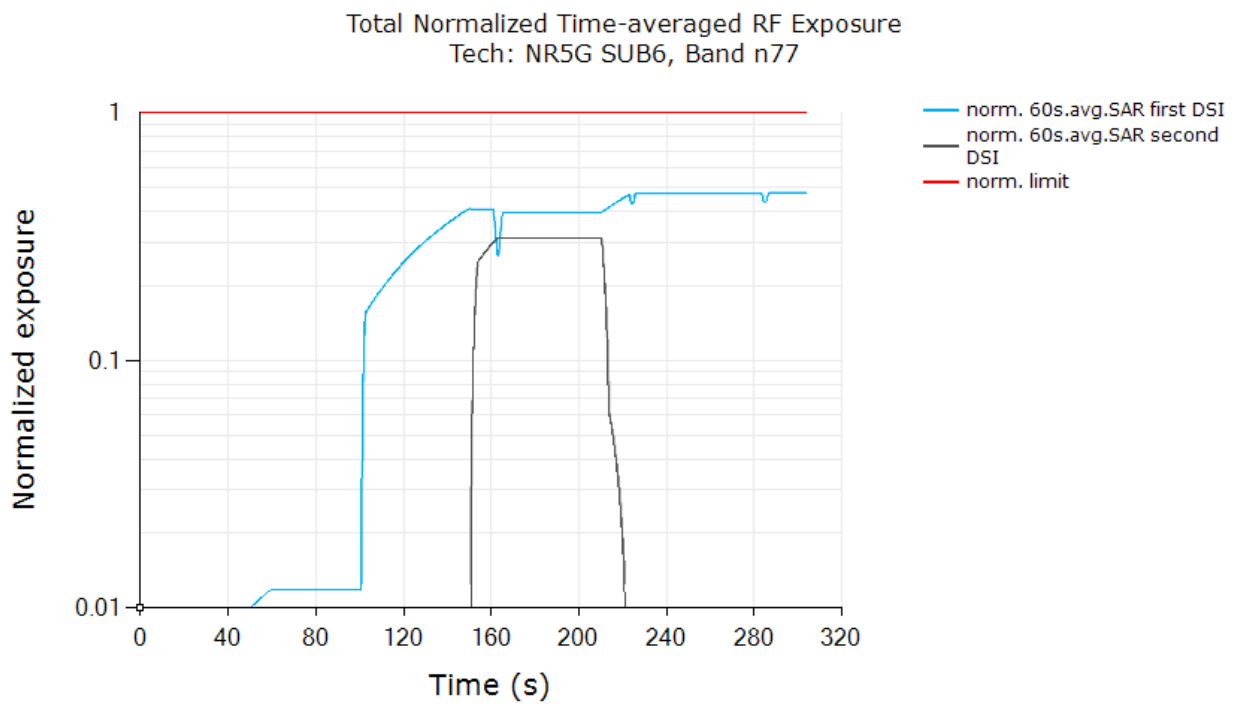

FCC normalized total exposure limit	1.0
Max 100s-time averaged normalized SAR (first DSI, blue curve)	0.474
Validated	

Plot Notes: Maximum power is requested by callbox for the entire duration of the test, time-averaged exposure in head DSI gradually increases until t~150s where the device is switched from head exposure DSI (first DSI, blue curve) to non-head exposure DSI (second DSI, black curve) as evident from increase in exposure of black curve and no change in blue curve between t~150s and t~162s. At t~162s, device is switched back from non-head exposure to head exposure as evident from increase in exposure of blue curve and no change in black curve. In this test, the time-averaged normalized RF exposure in head exposure DSI (blue curve) did not exceed normalized limit of 1.0 at all times, and is less than normalized SAR of 0.474 being ≤ 0.79 (= 1.0/1.6 + 1dB device uncertainty), validating the exposure continuity when switching between head exposure and non-head exposure categories.

© 2025 Element
REV 1.0
04/06/2020
Unless otherwise specified, no part of this report may be reproduced or utilized in any part, form or by any means, electronic or mechanical, including photocopying and microfilm, without permission in writing from Element. If you have any questions or have an enquiry about obtaining additional rights to this report or assembly of contents thereof, please contact CT.INFO@ELEMENT.COM.

6.8.2 Test case 2: Transition from NR Band n77 DSI=0 (Non-Head) to NR Band n77 DSI=1 (Head), then back to DSI=0 (Non-Head)

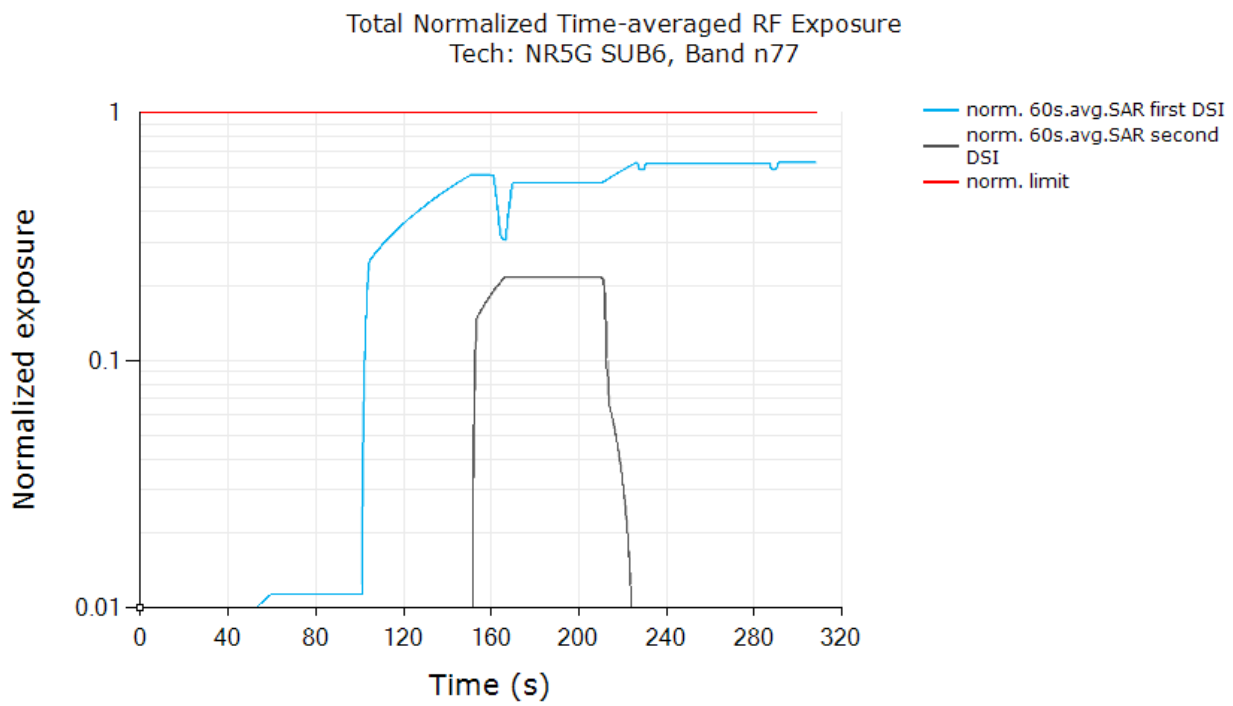

FCC normalized total exposure limit	1.0
Max 60s-time averaged normalized SAR (first DSI, blue curve)	0.629
Validated	

Plot Notes: Maximum power is requested by callbox for the entire duration of the test, time-averaged exposure in non-head DSI gradually increases until t~151s where the device is switched from non-head exposure DSI (first DSI, blue curve) to head exposure DSI (second DSI, black curve) as evident from increase in exposure of black curve and no change in blue curve between t~151s and t~166s. At t~166s, device is switched back from head exposure to non-head exposure as evident from increase in exposure of blue curve and no change in black curve. In this test, the time-averaged normalized RF exposure in head exposure DSI (blue curve) did not exceed normalized limit of 1.0 at all times, and is less than normalized SAR of 0.629 being ≤ 0.79 (= 1.0/1.6 + 1dB device uncertainty), validating the exposure continuity when switching between head exposure and non-head exposure categories.

6.9 SAR Exposure Switching WLAN DBS

This test was conducted with callbox requesting maximum power, and with the EUT in WLAN 2.4GHz (antenna I, DSI = 1) + WLAN 6GHz (antenna E, DSI = 1) call. Following procedure detailed in Section 4.3.7, and using the measurement setup shown in Figure 6-1e since WLAN channels are in different

© 2025 Element

Unless otherwise specified, no part of this report may be reproduced or utilized in any part, form or by any means, electronic or mechanical, including photocopying and microfilm, without permission in writing from Element. If you have any questions or have an enquiry about obtaining additional rights to this report or assembly of contents thereof, please contact CT.INFO@ELEMENT.COM.

antenna port, the SAR exposure switch measurement is performed with the EUT in various SAR exposure scenarios, i.e., in $SAR_{WLAN\ 2.4GHz}$ only scenario (t =0s ~120s), $SAR_{WLAN\ 2.4GHz}$ + $SAR_{WLAN\ 5GHz}$ scenario (t =120s ~ 240s) and $SAR_{WLAN\ 5GHz}$ only scenario (t > 240s).

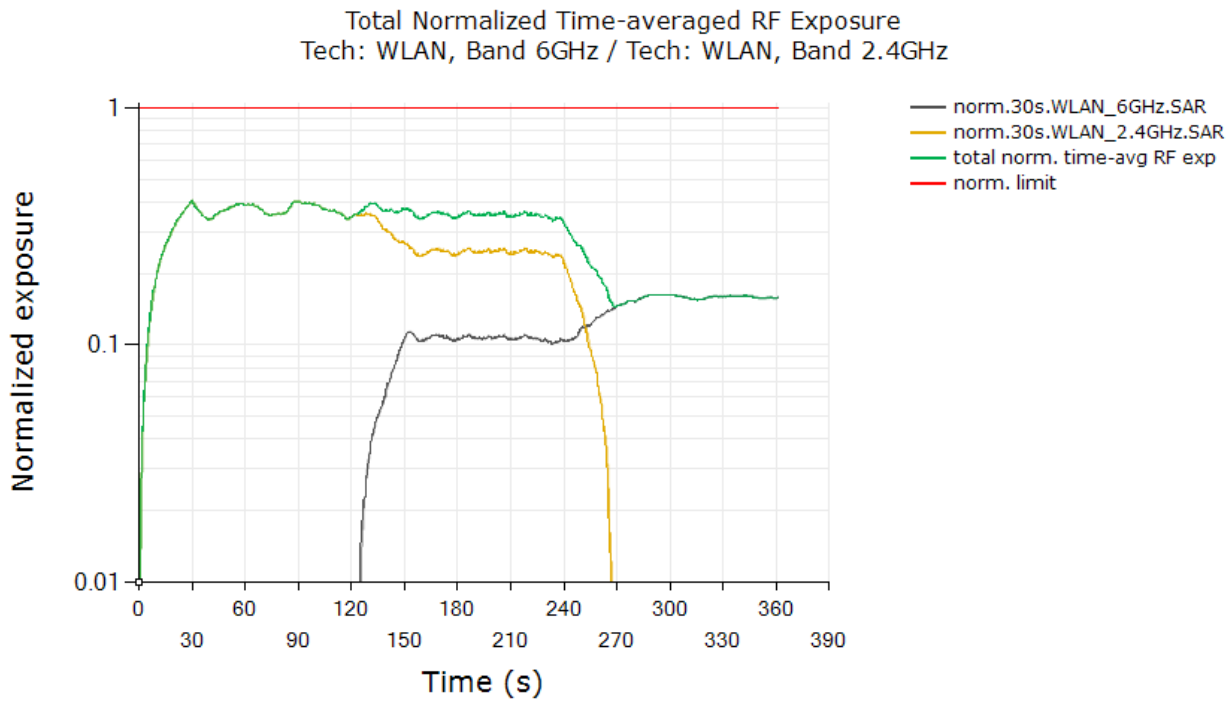

FCC normalized total exposure limit	1.0
Max time averaged normalized SAR (green curve)	0.407
Validated	

Plot Notes: All the conducted Tx power measurement results were converted into time-averaged normalized SAR values using Equation (7a), (7b) and (7c), and plotted below to demonstrate that the time-averaged normalized SAR versus time does not exceed the FCC limit of 1 unit. Equation (7a) is used to convert the WLAN Tx power of device to obtain 30s-averaged normalized SAR in WLAN 2.4GHz as shown in orange curve. Similarly, equation (7b) is used to obtain 30s-averaged normalized SAR in WLAN 5GHz as shown in black curve. Equation (7c) is used to obtain total time-averaged normalized SAR as shown in green curve (i.e., sum of black and orange curves). In this test, the total time-averaged normalized RF exposure (green curve) did not exceed normalized limit of 1.0 at all times, the above test result validated the continuity of power limiting in SAR exposure switch scenario.

6.10 System Level Compliance Continuity

This test was conducted with callbox requesting maximum power, and with the EUT in LTE Band 66 + WLAN 5GHz + Bluetooth call. Following procedure detailed in Section 4.3.9, and using the measurement setup shown in Figure 6-1f, since WWAN, WLAN, Bluetooth are in different antenna ports, the SAR

© 2025 Element
REV 1.0
04/06/2020
Unless otherwise specified, no part of this report may be reproduced or utilized in any part, form or by any means, electronic or mechanical, including photocopying and microfilm, without permission in writing from Element. If you have any questions or have an enquiry about obtaining additional rights to this report or assembly of contents thereof, please contact CT.INFO@ELEMENT.COM.

exposure switch measurement is performed with the EUT in various SAR exposure scenarios, WWAN radio transmission, WLAN transmission, simultaneous transmission of WWAN + WLAN + BT, simultaneous transmission of WLAN + BT in airplane mode, BT in airplane mode, WLAN in airplane mode, and finally simultaneous transmission of WWAN + WLAN + BT.

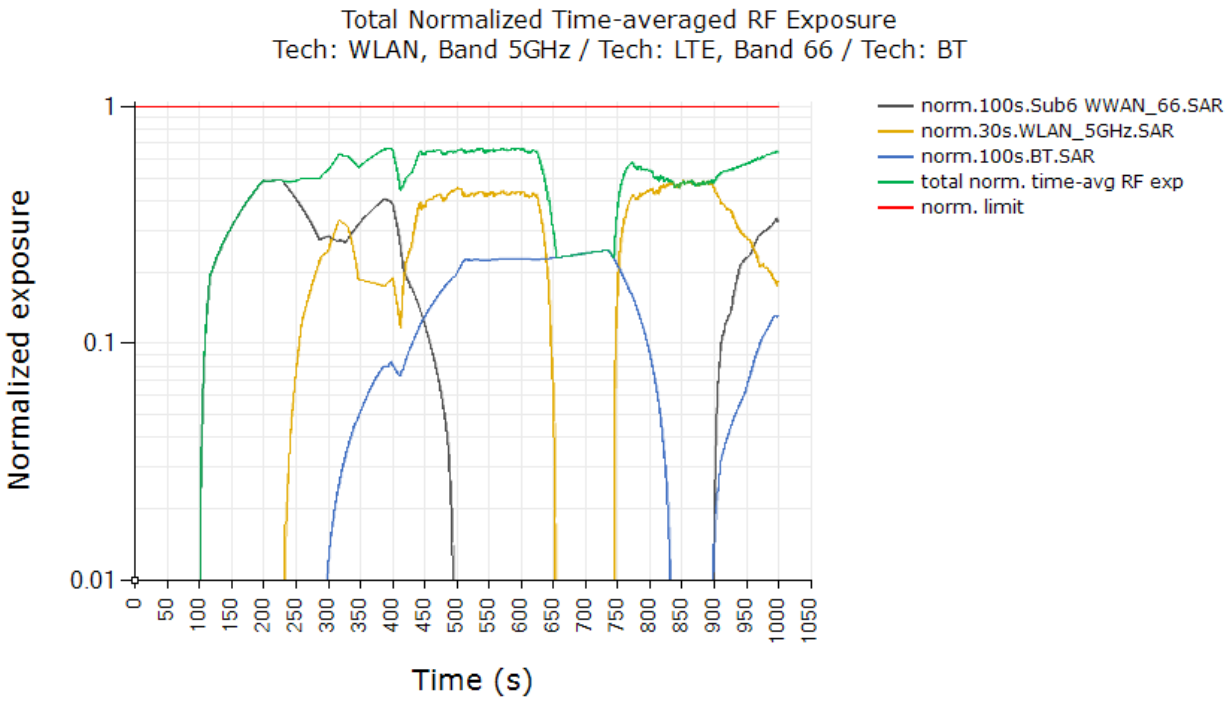

FCC normalized total exposure limit	1.0
Max time averaged normalized SAR (green curve)	0.667
Validated	

In this test, the total time-averaged normalized RF exposure (green curve) did not exceed normalized limit of 1.0 at all times, the above test result validated the total RF exposure compliance in system level compliance continuity test scenario.

Note: This test was performed with USB disconnected from DUT per Qualcomm 80-W2112-5 RevYF guidance.

© 2025 Element

Unless otherwise specified, no part of this report may be reproduced or utilized in any part, form or by any means, electronic or mechanical, including photocopying and microfilm, without permission in writing from Element. If you have any questions or have an enquiry about obtaining additional rights to this report or assembly of contents thereof, please contact CT.INFO@ELEMENT.COM.

7 EQUIPMENT LIST

Manufacturer	Model	Description	Cal Date	Cal Interval	Cal Due	Serial Number
Anritsu	MT8821C	Radio Communication Analyzer MT8821C	45730	Annual	3/14/2026	6262044715
Anritsu	MT8000A	Radio Communication Test Station	3/11/2025	Annual	3/11/2026	6272337439
Anritsu	MT8000A	Radio Communication Test Station	11/12/2024	Annual	11/12/2025	6272337405
Keysight Technologies	E7515B	UXM 5G Wireless Test Platform	CBT	N/A	CBT	MY59150289
K & L	11SH10-1300/U4000	High Pass Filter	CBT	N/A	CBT	11SH10-1300/U4000 - 2
Krytar	110067006	Directional Coupler, 10 - 67 GHz	CBT	N/A	CBT	200391
Pasternack	PE2208-6	Bidirectional Coupler	CBT	N/A	CBT	N/A
Pasternack	PE2209-10	Bidirectional Coupler	CBT	N/A	CBT	N/A
MCL	BW-N6W5+	6dB Attenuator	CBT	N/A	CBT	1139
Mini Circuits	ZA2PD2-63-S+	Power Splitter	CBT	N/A	CBT	SUU64901930
Mini Circuits	ZAPD-2-272-S+	Power Splitter	CBT	N/A	CBT	SF702001405
MIniCircuits	NLP-1200+	Low Pass Filter	CBT	N/A	CBT	VUU78201318
MiniCircuits	SLP-2400+	Low Pass Filter	CBT	N/A	CBT	R8979500903
MiniCircuits	VLF-6000+	Low Pass Filter DC to 6000 MHz	CBT	N/A	CBT	N/A
Mini-Circuits	BW-N20W5+	DC to 18 GHz Precision Fixed 20 dB Attenuator	CBT	N/A	CBT	N/A
Mini-Circuits	NLP-2950+	Low Pass Filter DC to 2700 MHz	CBT	N/A	CBT	N/A
Mini-Circuits	NLP-1200+	Low Pass Filter DC to 1000 MHz	CBT	N/A	CBT	N/A
Mini-Circuits	BW-N20W5	Power Attenuator	CBT	N/A	CBT	1226
Mini-Circuits	ZUDC10-83-S+	Directional Coupler	CBT	N/A	CBT	2050
Mini-Circuits	ZUDC10-83-S+	Directional Coupler	CBT	N/A	CBT	2051
Narda	4772-3	Attenuator (3dB)	CBT	N/A	CBT	9406
Narda	BW-S3W2	Attenuator (3dB)	CBT	N/A	CBT	120
Narda	4216-10	Directional Coupler, 0.5 to 8.0 GHz, 10 dB	CBT	N/A	CBT	01492
Narda	4216-10	Directional Coupler, 0.5 to 8.0 GHz, 10 dB	CBT	N/A	CBT	01493
Narda	4772-3	Attenuator	CBT	N/A	CBT	9406
Narda	BW-S3W2	Attenuator	CBT	N/A	CBT	120
Narda	BW-S10W2+	Attenuator	CBT	N/A	CBT	831
Narda	4014C-6	4 - 8 GHz SMA 6 dB Directional Coupler	CBT	N/A	CBT	N/A
Seekonk	NC-100	Torque Wrench	4/2/2024	Biennial	4/2/2026	1262
Rohde & Schwarz	CMW500	Radio Communication Tester	9/1/2025	Annual	9/1/2026	162125
Rohde & Schwarz	CMW500	Radio Communication Tester	8/14/2025	Annual	8/14/2026	164948
Rohde & Schwarz	CMX500	Radio Communication Tester	11/11/2024	Annual	11/11/2025	100298
Rohde & Schwarz	NRP8S	3-Path Dipole Power Sensor	2/19/2025	Annual	2/19/2026	109322
Rohde & Schwarz	NRP8S	3-Path Dipole Power Sensor	2/19/2025	Annual	2/19/2026	109960
Rohde & Schwarz	NRP8S	3-Path Dipole Power Sensor	2/24/2025	Annual	2/24/2026	109961
Rohde & Schwarz	NRP50S	3-Path Dipole Power Sensor	2/19/2025	Annual	2/19/2026	101339

Notes:

1. CBT (Calibrated Before Testing). Prior to testing, the measurement paths containing a cable, amplifier, attenuator, coupler, or filter were connected to a calibrated source (i.e. a signal generator) to determine the losses of the measurement path The power meter offset was then adjusted to compensate for the measurement system losses. This level offset is stored within the power meter before measurements are made. This calibration verification procedure applies to the system verification and output power measurements. The calibrated reading is then taken directly from the power meter after compensation of the losses for all final power measurements.
2. Each equipment item is used solely within its respective calibration period.

© 2025 Element

Unless otherwise specified, no part of this report may be reproduced or utilized in any part, form or by any means, electronic or mechanical, including photocopying and microfilm, without permission in writing from Element. If you have any questions or have an enquiry about obtaining additional rights to this report or assembly of contents thereof, please contact CT.INFO@ELEMENT.COM.

8 CONCLUSION

8.1 Measurement Conclusion

The SAR evaluation indicates that the DUT complies with the RF radiation exposure limits of the FCC and Innovation, Science, and Economic Development Canada, with respect to all parameters subject to this test. These measurements were taken to simulate the RF effects of RF exposure under worst-case conditions. Precise laboratory measures were taken to assure repeatability of the tests. The results and statements relate only to the item(s) tested.

Please note that the absorption and distribution of electromagnetic energy in the body are very complex phenomena that depend on the mass, shape, and size of the body, the orientation of the body with respect to the field vectors, and the electrical properties of both the body and the environment. Other variables that may play a substantial role in possible biological effects are those that characterize the environment (e.g. ambient temperature, air velocity, relative humidity, and body insulation) and those that characterize the individual (e.g. age, gender, activity level, debilitation, or disease). Because various factors may interact with one another to vary the specific biological outcome of an exposure to electromagnetic fields, any protection guide should consider maximal amplification of biological effects as a result of field-body interactions, environmental conditions, and physiological variables. [3]

© 2025 Element

Unless otherwise specified, no part of this report may be reproduced or utilized in any part, form or by any means, electronic or mechanical, including photocopying and microfilm, without permission in writing from Element. If you have any questions or have an enquiry about obtaining additional rights to this report or assembly of contents thereof, please contact CT.INFO@ELEMENT.COM.

9 REFERENCES

[1] Federal Communications Commission, ET Docket 93-62, Guidelines for Evaluating the Environmental Effects of Radiofrequency Radiation, Aug. 1996.

[2] ANSI/IEEE C95.1-2005, American National Standard safety levels with respect to human exposure to radio frequency electromagnetic fields, 3kHz to 300GHz, New York: IEEE, 2006.

[3] ANSI/IEEE C95.1-1992, American National Standard safety levels with respect to human exposure to radio frequency electromagnetic fields, 3kHz to 300GHz, New York: IEEE, Sept. 1992.

[4] ANSI/IEEE C95.3-2002, IEEE Recommended Practice for the Measurement of Potentially Hazardous Electromagnetic Fields - RF and Microwave, New York: IEEE, December 2002.

[5] IEEE Standards Coordinating Committee 39 –Standards Coordinating Committee 34 – IEEE Std. 1528-2013, IEEE Recommended Practice for Determining the Peak Spatial-Average Specific Absorption Rate (SAR) in the Human Head from Wireless Communications Devices: Measurement Techniques.

[6] NCRP, National Council on Radiation Protection and Measurements, Biological Effects and Exposure Criteria for RadioFrequency Electromagnetic Fields, NCRP Report No. 86, 1986. Reprinted Feb. 1995.

[7] T. Schmid, O. Egger, N. Kuster, Automated E-field scanning system for dosimetric assessments, IEEE Transaction on Microwave Theory and Techniques, vol. 44, Jan. 1996, pp. 105-113.

[8] K. Pokovic, T. Schmid, N. Kuster, Robust setup for precise calibration of E-field probes in tissue simulating liquids at mobile communications frequencies, ICECOM97, Oct. 1997, pp. 1 -124.

[9] K. Pokovic, T. Schmid, and N. Kuster, E-field Probe with improved isotropy in brain simulating liquids, Proceedings of the ELMAR, Zadar, Croatia, June 23-25, 1996, pp. 172-175.

[10] Schmid & Partner Engineering AG, Application Note: Data Storage and Evaluation, June 1998, p2.

[11] V. Hombach, K. Meier, M. Burkhardt, E. Kuhn, N. Kuster, The Dependence of EM Energy Absorption upon Human Modeling at 900 MHz, IEEE Transaction on Microwave Theory and Techniques, vol. 44 no. 10, Oct. 1996, pp. 1865-1873.

[12] N. Kuster and Q. Balzano, Energy absorption mechanism by biological bodies in the near field of dipole antennas above 300MHz, IEEE Transaction on Vehicular Technology, vol. 41, no. 1, Feb. 1992, pp. 17-23.

[13] G. Hartsgrove, A. Kraszewski, A. Surowiec, Simulated Biological Materials for Electromagnetic Radiation Absorption Studies, University of Ottawa, Bioelectromagnetics, Canada: 1987, pp. 29-36.

[14] Q. Balzano, O. Garay, T. Manning Jr., Electromagnetic Energy Exposure of Simulated Users of Portable Cellular Telephones, IEEE Transactions on Vehicular Technology, vol. 44, no.3, Aug. 1995.

[15] W. Gander, Computermathematick, Birkhaeuser, Basel, 1992.

[16] W.H. Press, S.A. Teukolsky, W.T. Vetterling, and B.P. Flannery, Numerical Recipes in C, The Art of Scientific Computing, Second edition, Cambridge University Press, 1992.

© 2025 Element

REV 1.0
04/06/2020

Unless otherwise specified, no part of this report may be reproduced or utilized in any part, form or by any means, electronic or mechanical, including photocopying and microfilm, without permission in writing from Element. If you have any questions or have an enquiry about obtaining additional rights to this report or assembly of contents thereof, please contact CT.INFO@ELEMENT.COM.

[17] N. Kuster, R. Kastle, T. Schmid, Dosimetric evaluation of mobile communications equipment with known precision, IEEE Transaction on Communications, vol. E80-B, no. 5, May 1997, pp. 645-652.

[18] CENELEC CLC/SC111B, European Prestandard (prENV 50166-2), Human Exposure to Electromagnetic Fields High-frequency: 10kHz-300GHz, Jan. 1995.

[19] Prof. Dr. Niels Kuster, ETH, Eidgenössische Technische Hoschschule Zürich, Dosimetric Evaluation of the Cellular Phone.

[20] IEC 62209-1, Measurement procedure for the assessment of specific absorption rate of human exposure to radio frequency fields from hand-held and body-mounted wireless communication devices - Part 1: Devices used next to the ear (Frequency range of 300 MHz to 6 GHz), July 2016.

[21] Innovation, Science, Economic Development Canada RSS-102 Radio Frequency Exposure Compliance of Radiocommunication Apparatus (All Frequency Bands) Issue 5, March 2015.

[22] Health Canada Safety Code 6 Limits of Human Exposure to Radio Frequency Electromagnetic Fields in the Frequency Range from 3 kHz – 300 GHz, 2015

[23] FCC SAR Test Procedures for 2G-3G Devices, Mobile Hotspot and UMPC Devices KDB Publications 941225, D01-D07

[24] SAR Measurement Guidance for IEEE 802.11 Transmitters, KDB Publication 248227 D01

[25] FCC SAR Considerations for Handsets with Multiple Transmitters and Antennas, KDB Publications 648474 D03-D04

[26] FCC SAR Evaluation Considerations for Laptop, Notebook, Netbook and Tablet Computers, FCC KDB Publication 616217 D04

[27] FCC SAR Measurement and Reporting Requirements for 100MHz – 6 GHz, KDB Publications 865664 D01-D02

[28] FCC General RF Exposure Guidance and SAR Procedures for Dongles, KDB Publication 447498, D01-D02

[29] Anexo à Resolução No. 533, de 10 de Septembro de 2009.

[30] IEC 62209-2, Human exposure to radio frequency fields from hand-held and body-mounted wireless communication devices - Human models, instrumentation, and procedures - Part 2: Procedure to determine the specific absorption rate (SAR) for wireless communication devices used in close proximity to the human body (frequency range of 30 MHz to 6 GHz), Mar. 2010.

© 2025 Element

Unless otherwise specified, no part of this report may be reproduced or utilized in any part, form or by any means, electronic or mechanical, including photocopying and microfilm, without permission in writing from Element. If you have any questions or have an enquiry about obtaining additional rights to this report or assembly of contents thereof, please contact CT.INFO@ELEMENT.COM.