SAMSUNG

SM-T255S

# Quick Start Guide

You can access the full user manual for more information. To learn to access the user manual, see "Viewing the user manual" in this quick start guide.

Draft Version / 2014-04-22

www.samsung.com

## Instructional icons

**Warning**: situations that could cause injury to yourself or others

**Caution**: situations that could cause damage to your device or other equipment

**Note**: notes, usage tips, or additional information

# Copyright

Copyright © 2013 Samsung Electronics

This guide is protected under international copyright laws.

No part of this guide may be reproduced, distributed, translated, or transmitted in any form or by any means, electronic or mechanical, including photocopying, recording, or storing in any information storage and retrieval system, without the prior written permission of Samsung Electronics.

## Trademarks

- SAMSUNG and the SAMSUNG logo are registered trademarks of Samsung Electronics.
- Bluetooth® is a registered trademark of Bluetooth SIG, Inc. worldwide.
- Wi-Fi®, Wi-Fi Protected Setup™, Wi-Fi Direct™, Wi-Fi CERTIFIED™, and the Wi-Fi logo are registered trademarks of the Wi-Fi Alliance.

  Your device uses a non-harmonised frequency and is intended for use in all European countries. The WLAN can be operated in the EU without restriction indoors, but cannot be operated outdoors.
- All other trademarks and copyrights are the property of their respective owners.

# Getting started

## Device layout

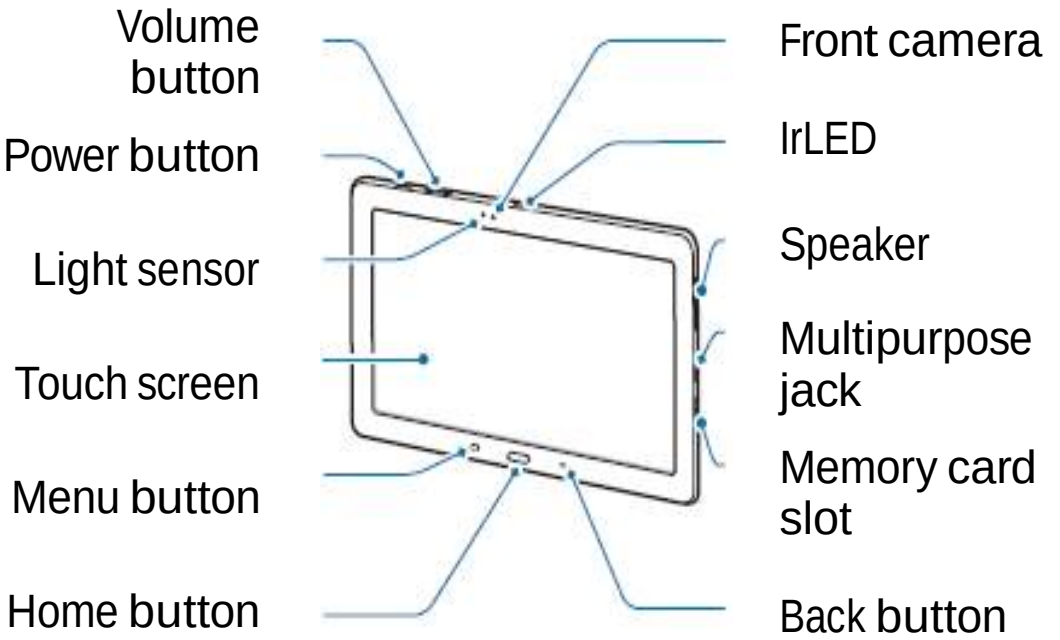

Do not cover the antenna area with your hands or other objects. This may cause connectivity problems or drain the battery.

# Charging the battery

Before using the device for the first time or when the battery has been unused for extended periods, you must charge the battery.

Use only Samsung-approved chargers, batteries, and cables. Unapproved chargers or cables can cause the battery to explode or damage the device.

Connect the USB cable to the USB power adaptor and then plug the end of the USB cable into the multipurpose jack.

When using a USB 2.0 cable, plug the USB cable into the right side of the multipurpose jack as shown in the image below.

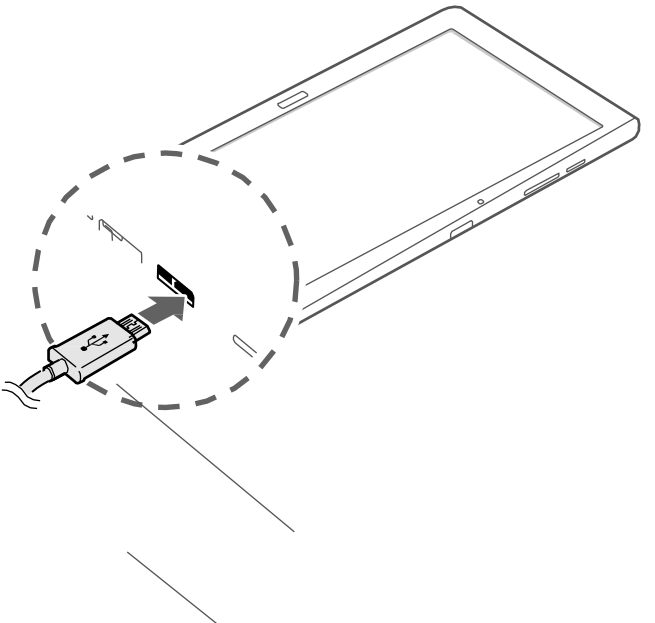

Connecting the charger improperly may cause serious damage to the device. Any damage caused by misuse is not covered by the warranty.

After fully charging, disconnect the device from the charger. First unplug the charger from the device, and then unplug it from the electric socket.

To save energy, unplug the charger when not in use. The charger does not have a power switch, so you must unplug the charger from the electric socket when not in use to avoid wasting power. The charger should remain close to the electric socket and easily accessible while charging.

## Checking the battery charge status

When you charge the battery while the device is off, the following icons will show the current battery charge status:

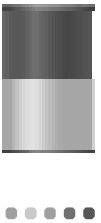

Charging

Fully charged

## Turning the device on and off

When turning on the device for the first time, follow the on-screen instructions to set up your device.

Press and hold the Power button for a few seconds to turn the device on and off.

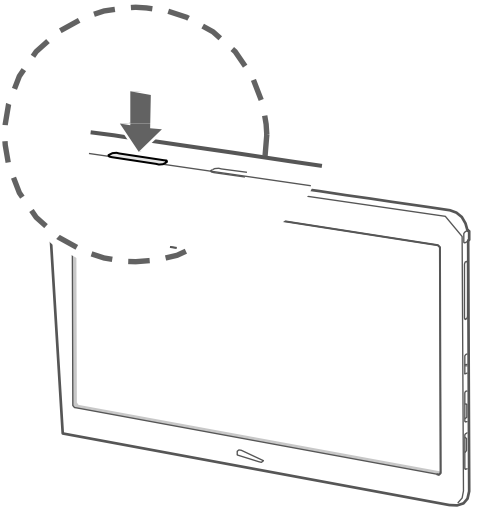

## Viewing the user manual

The user manual provides complete information about operating your device.

You may incur additional charges for accessing the Internet or downloading media files. For details, contact your service provider.

## From your device

1 Open the Internet application.

2 Tap to open the bookmarks list.

3 Select the bookmark for the user manual.

To access the user manual more easily, place a shortcut or widget for the user manual on the Home screen.

The user manual may not be available depending on the web browser or service provider.

## From your computer

Access www.samsung.com and then search for the user manual by the model name of your device.

# Safety information

**This safety information contains content for mobile devices. Some content may be not applicable to your device. To prevent injury to yourself and others or damage to your device, read the safety information about your device before using the device.**

## Warning

### Failure to comply with safety warnings and regulations can cause serious injury or death

**Do not use damaged power cords or plugs, or loose electrical sockets**

Unsecured connections can cause electric shock or fire.

**Do not touch the power cord with wet hands or disconnect the charger by pulling the cord**

Doing so may result in electrocution.

**Do not bend or damage the power cord**

Doing so may cause electric shock or fire.

**Do not use your device while it is charging or touch your device with wet hands**

Doing so may cause electric shock.

**Do not short-circuit the charger or the device**

Doing so may cause electric shock or fire, or the battery may malfunction or explode.

**Do not use your device outdoor during a thunderstorm**

Doing so may result in electric shock or device malfunction.

**Use manufacturer-approved batteries, chargers, accessories, and supplies**

- Using generic batteries or chargers may shorten the life of your device or cause the device to malfunction. They may also cause a fire or cause the battery to explode.
- Use only Samsung-approved battery and charger specifically designed for your device. Incompatible battery and charger can cause serious injuries or damage to your device.
- Samsung cannot be responsible for the user's safety when using accessories or supplies that are not approved by Samsung.

## Do not drop or cause an impact to the charger or the device

## Handle and dispose of the device and charger with care

- Never dispose of the battery or device in a fire. Never place the battery or device on or in heating devices, such as microwave ovens, stoves, or radiators. The device may explode when overheated. Follow all local regulations when disposing of used battery or device.
- Never crush or puncture the device.
- Avoid exposing the device to high external pressure, which can lead to an internal short circuit and overheating.

## Protect the device, battery and charger from damage

- Avoid exposing your device and battery to very cold or very hot temperatures.
- Extreme temperatures can damage the device and reduce the charging capacity and life of your device and battery.
- Prevent the battery from coming into contact with metal objects, as this can create a connection between the + and – terminals of your battery and lead to temporary or permanent battery damage.
- Never use a damaged charger or battery.

**Do not store your device near or in heaters, microwaves, hot cooking equipment, or high pressure containers**

- The battery may leak.
- Your device may overheat and cause a fire.

**Do not use or store your device in areas with high concentrations of dust or airborne materials**

Dust or foreign materials can cause your device to malfunction and may result in fire or electric shock.

**Prevent the multipurpose jack and the small end of the charger from contact with conductive materials, such as liquids, dust, metal powders, and pencil leads**

Conductive materials may cause a short circuit or corrosion of the terminals, which may result in an explosion or fire.

**Do not bite or suck the device or the battery**

- Doing so may damage the device or result in an explosion or fire.
- Children or animals can choke on small parts.
- If children use the device, make sure that they use the device properly.

**Do not insert the device or supplied accessories into the eyes, ears, or mouth**

Doing so may cause suffocation or serious injuries.

**Do not handle a damaged or leaking Lithium Ion (Li-Ion) battery**

For safe disposal of your Li-Ion battery, contact your nearest authorised service centre.

# Caution

## Failure to comply with safety cautions and regulations can cause injury or property damage

**Do not use your device near other electronic devices**

- Most electronic devices use radio frequency signals. Your device may interfere with other electronic devices.
- Using an LTE data connection may cause interference with other devices, such as audio equipment and telephones.

**Do not use your device in a hospital, on an aircraft, or in an automotive equipment that can be interfered with by radio frequency**

- Avoid using your device within a 15 cm range of a pacemaker, if possible, as your device can interfere with the pacemaker.
- To minimise possible interference with a pacemaker, use your device only on the side of your body that is opposite the pacemaker.
- If you use medical equipment, contact the equipment manufacturer before using your device to determine whether or not the equipment will be affected by radio frequencies emitted by the device.
- On an aircraft, using electronic devices can interfere with the aircraft's electronic navigational instruments. Make sure the device is turned off during takeoff and landing. After takeoff, you can use the device in flight mode if allowed by aircraft personnel.
- Electronic devices in your car may malfunction, due to radio interference from your device. Contact the manufacturer for more information.

**Do not expose the device to heavy smoke or fumes**

Doing so may damage the outside of the device or cause it to malfunction.

**If you use a hearing aid, contact the manufacturer for information about radio interference**

The radio frequency emitted by your device may interfere with some hearing aids. Before using your device, contact the manufacturer to determine whether or not your hearing aid will be affected by radio frequencies emitted by the device.

**Do not use your device near devices or apparatuses that emit radio frequencies, such as sound systems or radio towers**

Radio frequencies may cause your device to malfunction.

**Turn off the device in potentially explosive environments**

- Turn off your device in potentially explosive environments instead of removing the battery.
- Always comply with regulations, instructions and signs in potentially explosive environments.
- Do not use your device at refuelling points (petrol stations), near fuels or chemicals, or in blasting areas.
- Do not store or carry flammable liquids, gases, or explosive materials in the same compartment as the device, its parts, or accessories.

**If you notice strange smells or sounds coming from your device or the battery, or if you see smoke or liquids leaking from the device or battery, stop using the device immediately and take it to a Samsung Service Centre**

Failure to do so may result in fire or explosion.

**Comply with all safety warnings and regulations regarding mobile device usage while operating a vehicle**

While driving, safely operating the vehicle is your first responsibility. Never use your mobile device while driving, if it is prohibited by law. For your safety and the safety of others, use your common sense and remember the following tips:

- Get to know your device and its convenience features, such as speed dial and redial. These features help you reduce the time needed to place or receive calls on your mobile device.
- Position your device within easy reach. Make sure you can access your wireless device without taking your eyes off the road. If you receive an incoming call at an inconvenient time, let your voicemail answer it for you.
- Suspend calls in heavy traffic or hazardous weather conditions. Rain, sleet, snow, ice, and heavy traffic can be hazardous.

- Do not take notes or look up phone numbers. Jotting down a "to do" list or flipping through your address book takes attention away from your primary responsibility of driving safely.
- Dial sensibly and assess the traffic. Place calls when you are not moving or before pulling into traffic. Try to plan calls when your car will be stationary.
- Do not engage in stressful or emotional conversations that may be distracting. Make the person you are talking to aware that you are driving and suspend conversations that could potentially divert your attention from the road.

## Care and use your mobile device properly

### Keep your device dry

- Humidity and liquids may damage the parts or electronic circuits in your device.
- Do not turn on your device if it is wet. If your device is already on, turn it off and remove the battery immediately (if the device will not turn off or you cannot remove the battery, leave it as-is). Then, dry the device with a towel and take it to a service centre.
- Liquids will change the colour of the label that indicates water damage inside the device. Water damage to your device can void your manufacturer's warranty.

**Store your device only on flat surfaces**

If your device falls, it may be damaged.

**Do not store your device in very hot or very cold areas. It is recommended to use your device at temperatures from 5 °C to 35 °C**

- Do not store your device in very hot areas such as inside a car in the summertime. Doing so may cause the screen to malfunction, result in damage to the device, or cause the battery to explode.
- Do not expose your device to direct sunlight for extended periods of time (on the dashboard of a car, for example).
- Store the battery at temperatures from 0 °C to 45 °C.

**Do not store your device with metal objects, such as coins, keys, and necklaces**

- Your device may be scratched or may malfunction.
- If the battery terminals come into contact with metal objects, this may cause a fire.

**Do not store your device near magnetic fields**

- Your device may malfunction or the battery may discharge from exposure to magnetic fields.
- Magnetic stripe cards, including credit cards, phone cards, passbooks, and boarding passes, may be damaged by magnetic fields.

**Do not use your device or applications for a while if the device is overheated**

Prolonged exposure of your skin to an overheated device may cause low temperature burn symptoms, such as red spots and pigmentation.

**Do not use your device with the back cover removed**

The battery may fall out of the device, which may result in damage or malfunction.

**If your device has a camera flash or light, do not use it close to the eyes of people or pets**

Using a flash close to the eyes may cause temporary loss of vision or damage to the eyes.

**Use caution when exposed to flashing lights**

- While using your device, leave some lights on in the room and do not hold the screen too close to your eyes.
- Seizures or blackouts can occur when you are exposed to flashing lights while watching videos or playing Flash-based games for extended periods. If you feel any discomfort, stop using the device immediately.
- If anyone related to you has experienced seizures or blackouts while using a similar device, consult a physician before using the device.

- If you feel discomfort, such as a muscle spasm, or disoriented, stop using the device immediately and consult a physician.
- To prevent eye strain, take frequent breaks while using the device.

**Reduce the risk of repetitive motion injuries**

When you repetitively perform actions, such as pressing keys, drawing characters on a touch screen with your fingers, or playing games, you may experience occasional discomfort in your hands, neck, shoulders, or other parts of your body. When using your device for extended periods, hold the device with a relaxed grip, press the keys lightly, and take frequent breaks. If you continue to have discomfort during or after such use, stop using the device and consult a physician.

**Protect your hearing and ears when using a headset**

- Excessive exposure to loud sounds can cause hearing damage.
- Exposure to loud sounds while walking may distract your attention and cause an accident.
- Always turn the volume down before plugging the earphones into an audio source and use only the minimum volume setting necessary to hear your conversation or music.

- In dry environments, static electricity can build up in the headset. Avoid using headsets in dry environments or touch a metal object to discharge static electricity before connecting a headset to the device.
- Do not use a headset while driving or riding. Doing so may distract your attention and cause an accident, or may be illegal depending on your region.

**Use caution when using the device while walking or moving**

- Always be aware of your surroundings to avoid injury to yourself or others.
- Make sure the headset cable does not become entangled in your arms or on nearby objects.

**Do not carry your device in your back pockets or around your waist**

You could be injured or damage the device if you fall.

**Do not paint or put stickers on your device**

- Paint and stickers can clog moving parts and prevent proper operation.
- If you are allergic to paint or metal parts of the device, you may experience itching, eczema, or swelling of the skin. When this happens, stop using the device and consult your physician.

### Do not use the device if it is cracked or broken

Broken glass or acrylic could cause injury to your hands and face. Take the device to a Samsung Service Centre to have it repaired.

### Install mobile devices and equipment with caution

- Ensure that any mobile devices or related equipment installed in your vehicle are securely mounted.
- Avoid placing your device and accessories near or in an airbag deployment area. Improperly installed wireless equipment can cause serious injury when airbags inflate rapidly.

### Do not drop your device or cause impacts to your device

- Your device may be damaged or may malfunction.
- If bent or deformed, your device may be damaged or parts may malfunction.

### Ensure maximum battery and charger life

- Avoid charging your device for more than a week, as overcharging may shorten battery life.
- Over time, unused device will discharge and must be recharged before use.
- Disconnect the charger from power sources when not in use.
- Use the battery only for their intended purposes.

- Leaving batteries unused over time may reduce their lifespan and performance. It may also cause the batteries to malfunction or explode, or cause a fire.
- Follow all instructions in this manual to ensure the longest lifespan of your device and battery. Damages or poor performance caused by failure to follow warnings and instructions can void your manufacturer's warranty.
- Your device may wear out over time. Some parts and repairs are covered by the warranty within the validity period, but damages or deterioration caused by using unapproved accessories are not.

**When using the device, mind the following**

- Hold the device upright, as you would with a traditional phone.
- Speak directly into the microphone.

**Do not disassemble, modify, or repair your device**

- Any changes or modifications to your device can void your manufacturer's warranty. If your device needs servicing, take your device to a Samsung Service Centre.
- Do not disassemble or puncture the battery, as this can cause explosion or fire.
- Turn off the device before removing the battery. If you remove the battery with the device turned on, it may cause the device to malfunction.

**When cleaning your device, mind the following**

- Wipe your device or charger with a towel or an eraser.
- Clean the battery terminals with a cotton ball or a towel.
- Do not use chemicals or detergents. Doing so may discolour or corrode the outside the device or may result in electric shock or fire.

**Do not use the device for anything other than its intended use**

Your device may malfunction.

**Avoid disturbing others when using the device in public**

**Allow only qualified personnel to service your device**

Allowing unqualified personnel to service your device may result in damage to your device and will void your manufacturer's warranty.

**Handle memory cards, or cables with care**

- When inserting a card or connecting a cable to your device, make sure that the card is inserted or the cable is connected to the proper side.
- Do not remove a card while the device is transferring or accessing information, as this could result in loss of data and/or damage to the card or device.

- Protect cards from strong shocks, static electricity, and electrical noise from other devices.
- Do not touch gold-coloured contacts or terminals with your fingers or metal objects. If dirty, wipe the card with a soft cloth.
- Inserting a card or connecting a cable by force or improperly may result in damage to the multipurpose jack or other parts of the device.

### Ensure access to emergency services

Emergency calls from your device may not be possible in some areas or circumstances. Before travelling in remote or undeveloped areas, plan an alternative method of contacting emergency services personnel.

### Protect your personal data and prevent leakage or misuse of sensitive information

- While using your device, be sure to back up important data. Samsung is not responsible for the loss of any data.
- When disposing of your device, back up all data and then reset your device to prevent misuse of your personal information.
- Carefully read the permissions screen when downloading applications. Be particularly cautious with applications that have access to many functions or to a significant amount of your personal information.

- Check your accounts regularly for unapproved or suspicious use. If you find any sign of misuse of your personal information, contact your service provider to delete or change your account information.
- In the event your device is lost or stolen, change the passwords on your accounts to protect your personal information.
- Avoid using applications from unknown sources and lock your device with a pattern, password, or PIN.

**Do not distribute copyright-protected material**

Do not distribute copyright-protected material without the permission of the content owners. Doing this may violate copyright laws. The manufacturer is not liable for any legal issues caused by the user's illegal use of copyrighted material.

## Malware and viruses

**To protect your device from malware and viruses, follow these usage tips. Failure to do so may result in damages or loss of data that may not be covered by the warranty service**

- Do not download unknown applications.
- Do not visit untrusted websites.
- Delete suspicious messages or email from unknown senders.

# Correct disposal of this product

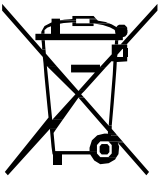

(Waste Electrical & Electronic Equipment)

(Applicable in countries with separate collection systems)

This marking on the product, accessories or literature indicates that the product and its electronic accessories (e.g. charger, headset, USB cable) should not be disposed of with other household waste.

To prevent possible harm to the environment or human health from uncontrolled waste disposal, please separate these items from other types of waste and recycle them responsibly to promote the sustainable reuse of material resources.

Household users should contact either the retailer where they purchased this product, or their local government office, for details of where and how they can take these items for environmentally safe recycling.

Business users should contact their supplier and check the terms and conditions of the purchase contract. This product and its electronic accessories should not be mixed with other commercial wastes for disposal.

This EEE is compliant with RoHS.

## Correct disposal of batteries in this product

(Applicable in countries with separate collection systems)

The marking on the battery, manual or packaging indicates that the battery in this product should not be disposed of with other household waste. Where marked, the chemical symbols Hg, Cd or Pb indicate that the battery contains mercury, cadmium or lead above the reference levels in EC Directive 2006/66.

The battery incorporated in this product is not user replaceable. For information on its replacement, please contact your service provider. Do not attempt to remove the battery or dispose it in a fire. Do not disassemble, crush, or puncture the battery. If you intend to discard the product, the waste collection site will take the appropriate measures for the recycling and treatment of the product, including the battery.

## Disclaimer

Some content and services accessible through this device belong to third parties and are protected by copyright, patent, trademark and/or other intellectual property laws. Such content and services are provided solely for your personal non-commercial use. You may not use any content or services in a manner that has not been authorised by the content owner or service provider. Without limiting the foregoing, unless expressly authorised by the applicable content owner or service provider, you may not modify, copy, republish, upload, post, transmit, translate, sell, create derivative works, exploit, or distribute in any manner or medium any content or services displayed through this device.

"THIRD PARTY CONTENT AND SERVICES ARE PROVIDED "AS IS." SAMSUNG DOES NOT WARRANT CONTENT OR SERVICES SO PROVIDED, EITHER EXPRESSLY OR IMPLIEDLY, FOR ANY PURPOSE. SAMSUNG EXPRESSLY DISCLAIMS ANY IMPLIED WARRANTIES, INCLUDING BUT NOT LIMITED TO, WARRANTIES OF MERCHANTABILITY OR FITNESS FOR A PARTICULAR PURPOSE. SAMSUNG DOES NOT GUARANTEE THE ACCURACY, VALIDITY, TIMELINESS, LEGALITY, OR COMPLETENESS OF ANY CONTENT OR SERVICE MADE AVAILABLE THROUGH THIS DEVICE AND UNDER NO CIRCUMSTANCES, INCLUDING NEGLIGENCE, SHALL SAMSUNG BE LIABLE, WHETHER IN CONTRACT OR TORT, FOR ANY DIRECT, INDIRECT, INCIDENTAL, SPECIAL OR CONSEQUENTIAL DAMAGES, ATTORNEY FEES, EXPENSES, OR ANY OTHER

DAMAGES ARISING OUT OF, OR IN CONNECTION WITH, ANY INFORMATION CONTAINED IN, OR AS A RESULT OF THE USE OF ANY CONTENT OR SERVICE BY YOU OR ANY THIRD PARTY, EVEN IF ADVISED OF THE POSSIBILITY OF SUCH DAMAGES."

Third party services may be terminated or interrupted at any time, and Samsung makes no representation or warranty that any content or service will remain available for any period of time. Content and services are transmitted by third parties by means of networks and transmission facilities over which Samsung has no control. Without limiting the generality of this disclaimer, Samsung expressly disclaims any responsibility or liability for any interruption or suspension of any content or service made available through this device.

Samsung is neither responsible nor liable for customer service related to the content and services. Any question or request for service relating to the content or services should be made directly to the respective content and service providers.

## FCC Notice and Cautions

### FCC Notice

This device complies with Part 15 of the FCC Rules. Operation is subject to the following two conditions: (1) this device may not cause harmful interference, and (2) this device must accept any interference received, including interference that may cause undesired operation.

- This equipment has been tested and found to comply with the limits for a Class B digital device, pursuant to part 15 of the FCC Rules. These limits are designed to provide reasonable protection against harmful interference in a residential installation. This equipment generates, uses and can radiate radio frequency energy and, if not installed and used in accordance with the instructions, may cause harmful interference to radio communications. However, there is no guarantee that interference will not occur in a particular installation. If this equipment does cause harmful interference to radio or television reception, which can be determined by turning the equipment off and on, the user is encouraged to try to correct the interference by one or more of the following measures:

-Reorient or relocate the receiving antenna.

-Increase the separation between the equipment and receiver.

-Connect the equipment into an outlet on a circuit different from that to which the receiver is connected.

-Consult the dealer or an experienced radio/TV technician for help.

The tablet may cause TV or radio interference if used in close proximity to receiving equipment. The FCC can require you to stop using the tablet if such interference cannot be eliminated.

Vehicles using liquefied petroleum gas (such as propane or butane) must comply with the National Fire Protection Standard (NFPA-58). For a copy of this standard, contact the National Fire Protection Association, One Battery march Park, Quincy, MA 02269, Attn: Publication Sales Division.

### Cautions

Changes or modifications made in the radio phone, not expressly approved by Samsung, will void the user's authority to operate the equipment.

The use of any unauthorized accessories may be dangerous and void the tablet warranty if said accessories cause damage or a defect to the tablet.

Although your tablet is quite sturdy, it is a complex piece of equipment and can be broken. Avoid dropping, hitting, bending or sitting on it.

This device is capable of operating in 802.11a/n mode. For 802.11a/n devices operating in the frequency range of 5.15 - 5.25 GHz, they are restricted for indoor operations to reduce any potential harmful interference for Mobile Satellite Services (MSS) in the US. WIFI Access Points that are capable of allowing your device to operate in 802.11a/n mode (5.15 - 5.25 GHz band) are optimized for indoor use only. If your WIFI network is capable of operating in this mode, please restrict your WIFI use indoors to not violate federal regulations to protect Mobile Satellite Services.

- Do not short-circuit the battery. Accidental short- circuiting can occur when a metallic object (coin, clip or pen) causes a direct connection between the + and - terminals of the battery (metal strips on the battery), for example when you carry a spare battery in a pocket or bag. Short-circuiting the terminals may damage the battery or the object causing the short-circuiting.
- Dispose of used batteries in accordance with local regulations. In some areas, the disposal of batteries in household or business trash may be prohibited. For safe disposal options for Li-Ion batteries, contact your nearest Samsung authorized service center. Always recycle. Do not dispose of batteries in a fire.

**Care and Maintenance**

Your tablet is a product of superior design and craftsmanship and should be treated with care. The suggestions below will help you fulfill any warranty obligations and allow you to enjoy this product for many years.

- Keep the tablet and all its parts and accessories out of the reach of small children.
- Keep the tablet dry. Precipitation, humidity and liquids contain minerals that will corrode electronic circuits.
- Do not use the tablet with a wet hand. Doing so may cause an electric shock to you or damage to the tablet.
- Do not use or store the tablet in dusty, dirty areas, as its moving parts may be damaged.
- Do not store the tablet in hot areas. High temperatures can shorten the life of electronic devices, damage batteries, and warp or melt certain plastics.
- Do not store the tablet in cold areas. When the tablet warms up to its normal operating temperature, moisture can form inside the tablet , which may damage the tablet's electronic circuit boards.
- Do not drop, knock or shake the tablet. Rough handling can break internal circuit boards.
- Do not use harsh chemicals, cleaning solvents or strong detergents to clean. Wipe it with a soft cloth slightly dampened in a mild soap-and-water solution.
- Do not paint the tablet. Paint can clog the device's moving parts and prevent proper operation.
- Do not put the tablet in or on heating devices, such as a microwave oven, a stove or a radiator. The tablet may explode when overheated.
- When the tablet or battery gets wet, the label indicating water damage inside the tablet changes color. In this case, tablet repairs are no longer guaranteed by the manufacturer's warranty, even if the warranty for your tablet has not expired.
- If your tablet has a flash or light, do not use it too close to the eyes of people or animals. This may cause damage to their eyes.

- Use only the supplied or an approved replacement antenna. Unauthorized antennas or modified accessories may damage the phone and violate regulations governing radio devices.
- If the tablet, battery, charger or any accessory is not working properly, take it to your nearest qualified service facility. The personnel there will assist you, and if necessary, arrange for service.

### Correct disposal of this product

(Waste Electrical & Electronic Equipment)

(Applicable in the European Union and other European countries with separate collection systems)

This marking shown on the product or its literature, indicates that it should not be disposed with other household wastes at the end of its working life. To prevent possible harm to the environment or human health from uncontrolled waste disposal, please separate this from other types of wastes and recycle it responsibly to promote the sustainable reuse of material resources.

Household users should contact either the retailer where they purchased this product, or their local government office, for details of where and how they can take this item for environmentally safe recycling.

Business users should contact their supplier and check the terms and conditions of the purchase contract. This product should not be mixed with other commercial wastes for disposal.

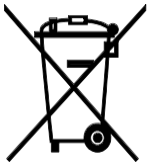

### Correct disposal of batteries in this product

(Applicable in the European Union and other European countries with separate battery return systems)

This marking on the battery, manual or packaging indicates that the batteries in this product should not be disposed of with other household waste at the end of their working life. Where marked, the chemical symbols Hg, Cd or Pb indicate that the battery contains mercury, cadmium or lead above the reference levels in EC Directive 2006/66. If batteries are not properly disposed of, these substances can cause harm to human health or the environment.

To protect natural resources and to promote material reuse, please separate batteries from other types of waste and recycle them through your local, free battery return system.

# Health and safety information

## Exposure to Radio Frequency (RF) Signals

### Certification Information (SAR)

Your wireless device is a radio transmitter and receiver. It is designed and manufactured not to exceed the exposure limits for radio frequency (RF) energy set by the Federal Communications Commission (FCC) of the U.S. government. These FCC exposure limits are derived from the recommendations of two expert organizations, the National Counsel on Radiation Protection and Measurement (NCRP) and the Institute of Electrical and Electronics Engineers (IEEE). In both cases, the recommendations were developed by scientific and engineering experts drawn from industry, government, and academia after extensive reviews of the scientific literature related to the biological effects of RF energy.

The exposure limit set by the FCC for wireless mobile devices employs a unit of measurement known as the Specific Absorption Rate (SAR). The SAR is a measure of the rate of absorption of RF energy by the human body expressed in units of watts per kilogram (W/kg). The FCC requires wireless devices to comply with a safety limit of 1.6 watts per kilogram (1.6 W/kg). The FCC exposure limit incorporates a substantial margin of safety to give additional protection to the public and to account for any variations in measurements.

SAR tests are conducted using recommended operating positions accepted by the FCC with the device transmitting at its highest certified power level in all tested frequency bands. Although the SAR is determined at the highest certified power level, the actual SAR level of the device while operating can be well below the maximum value. This is because the device is designed to operate at multiple power levels so as to use only the power required to reach the network. In general, the closer you are to a wireless base station antenna, the lower the power output.

Before a new model device is available for sale to the public, it must be tested and certified to the FCC that it does not exceed the exposure limit established by the FCC. Tests for each model are performed in positions and locations (e.g. near the body) as required by the FCC.

For typical operations, this model has been tested and meets the FCC exposure guidelines.

SAR information on this and other models can be viewed on-line at http://www.fcc.gov/oet/ea/fccid/. This site uses the FCC ID number A3LSMT255S.

You can check the FCC ID on the rear case. Once you have the FCC ID number for a particular device, follow the instructions on the website and it should provide values for typical or maximum SAR for a particular device. Additional product specific SAR information can also be obtained at www.fcc.gov/cgb/sar.

## Operating Environment

Remember to follow any special regulations in force in any area and always switch your device off whenever it is forbidden to use it, or when it may cause interference or danger. When connecting the device or any accessory to another device, read its user's guide for detailed safety instructions. Do not connect incompatible products.