SAMSUNG

SM-T365

Quick Start Guide

Draft version
2014-08-20

Accessing more information

On your device, open the web browser and select the bookmark for the user manual from the bookmarks list.

Visit *www.samsung.com* to view device information, the user manual, and more.

The user manual may not be available depending on the web browser or service provider.

Device layout

To turn on the device, press and hold the Power button for a few seconds.

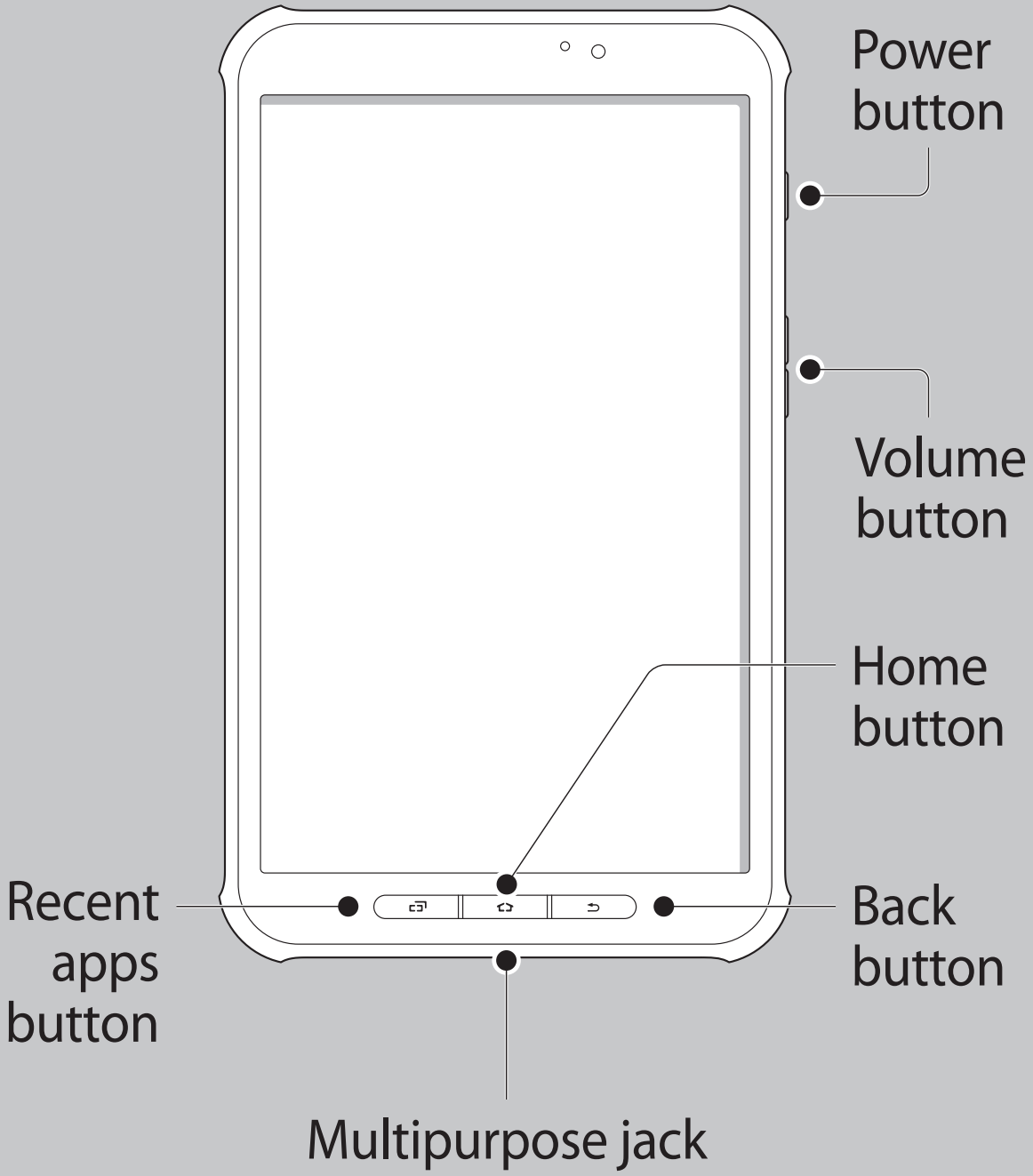

Ensure that the back cover is closed tightly to prevent water and dust entering the device. Open or loose back cover may allow water and dust to enter the device and cause damage.

Installing the battery

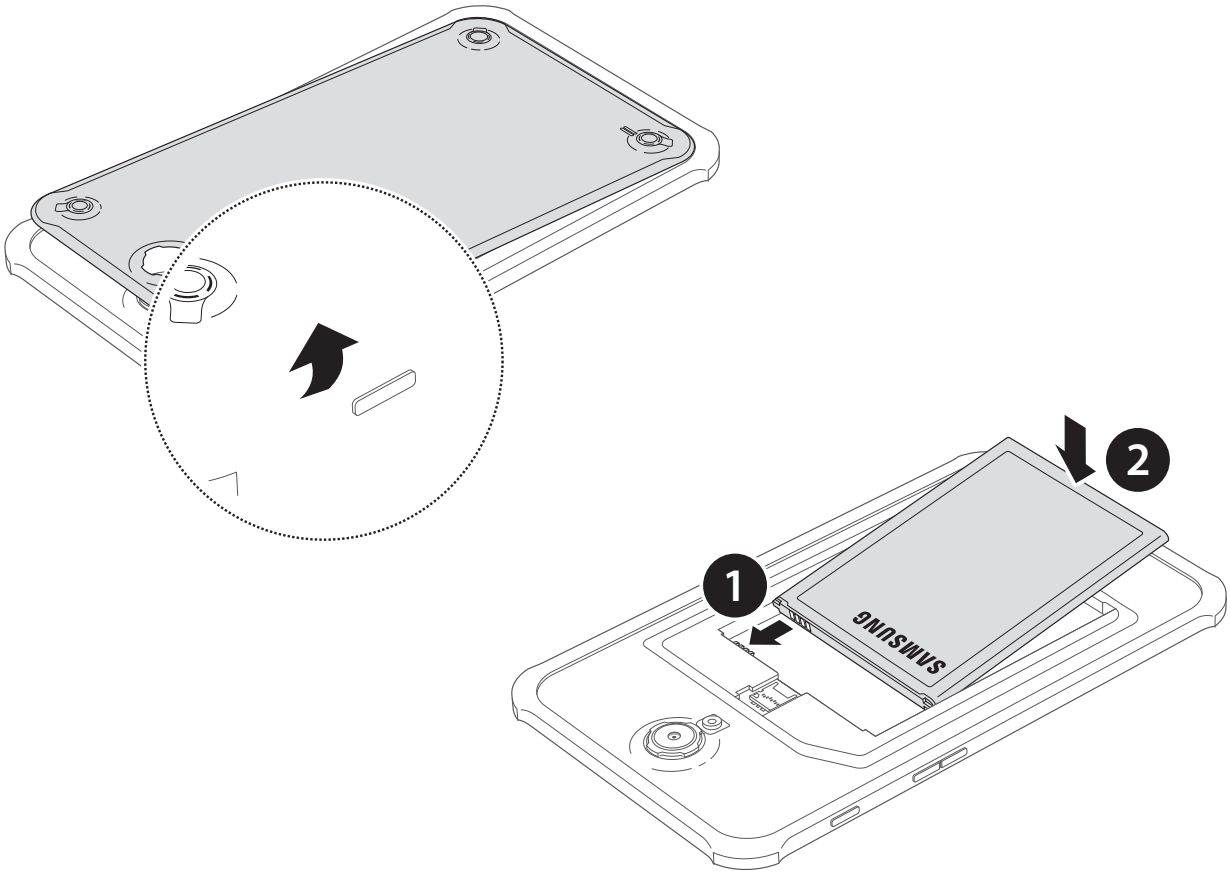

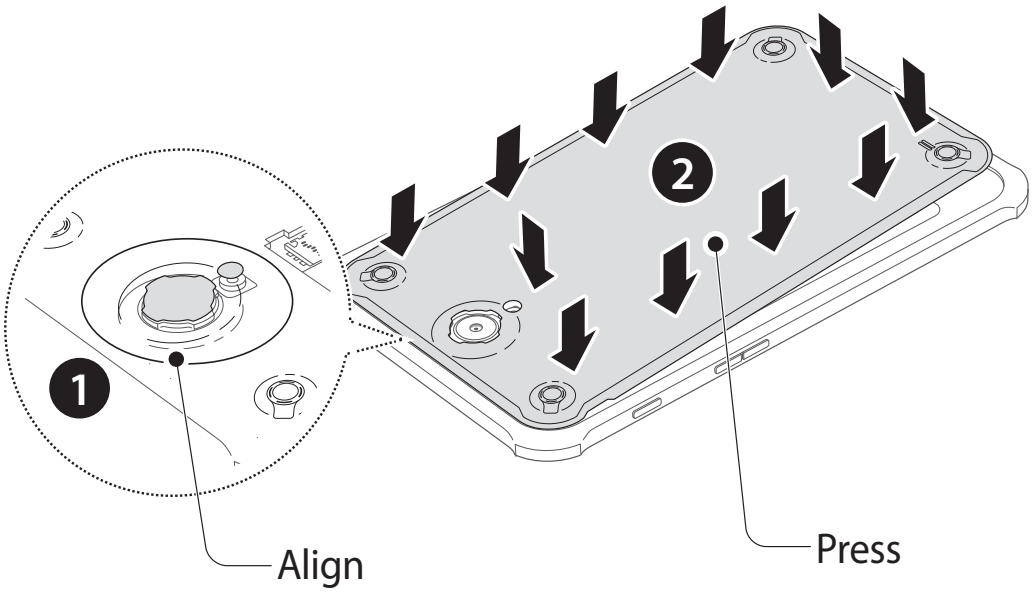

- Ensure that the back cover is closed tightly.
- Use only Samsung-approved back covers and accessories with the device.

Charging the battery

Before using the device for the first time, you must charge the battery.

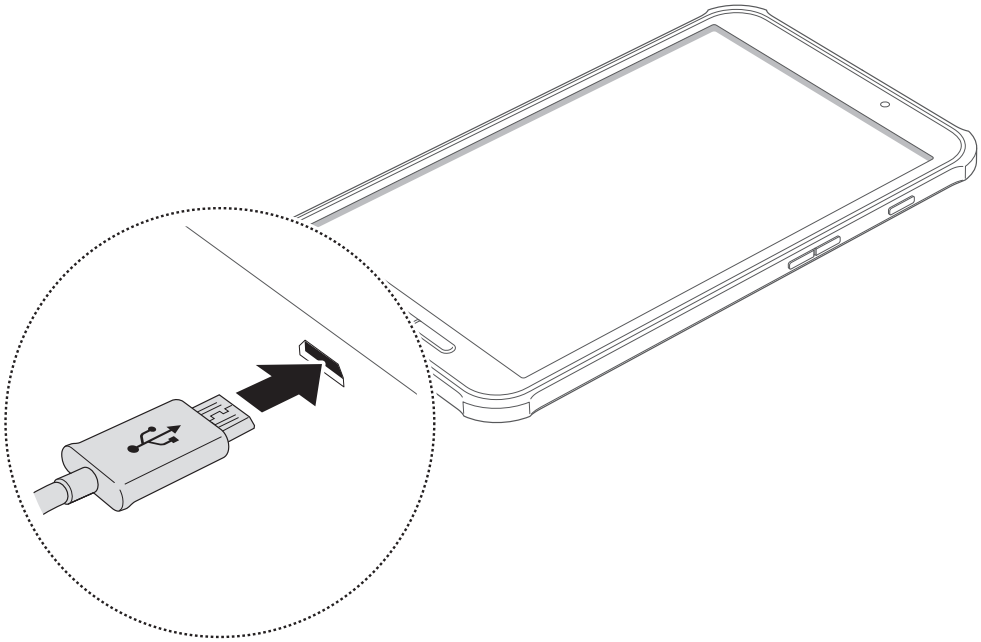

The charger should remain close to the electric socket and easily accessible while charging.

Some content may differ from your device depending on the region, service provider, or software version, and is subject to change without prior notice.

Correct disposal

To view more information about device and battery disposal, tap → **Settings** → **General** → **About device** → **Legal information** → **Safet y information**.

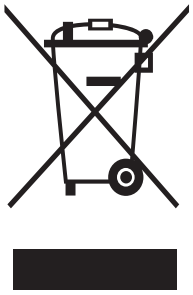

This marking on the product, accessories or literature indicates that the product and its electronic accessories (e.g. charger, headset, USB cable) should not be disposed of with other household waste.

This product is RoHS compliant.

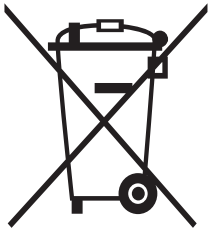

This marking on the battery, manual or packaging indicates that the batteries in this product should not be disposed of with other household waste.

Safety information

To prevent injury, fire, or explosion, read and adhere to all safety information before using the device.

To view the full safety information, tap → **Settings** → **General** → **About device** → **Legal information** → **Safety information**.

Warning

- Use manufacturer-approved batteries, chargers, accessories, and supplies.
- Do not expose the device to physical impact or damage.
- Prevent the multipurpose jack and battery terminals from contacting conductive elements, such as metal or liquids.
- Do not store your device in very hot or very cold areas. It is recommended to use your device at temperatures from 5 °C to 35 °C.
- Do not store your device near or in heaters, microwaves, cooking equipment, or high pressure containers.
- Do not touch the charger or the device with wet hands while the device is charging.
- Do not use your device outdoor during a thunderstorm.
- Turn off the device in potentially explosive environments.
- Comply with all safety warnings and regulations regarding mobile device usage while operating a vehicle.
- If the device is cracked, broken, or becomes very hot, stop using the device immediately and take it to a Samsung Service Centre.
- Do not allow children or animals to chew or suck the device.
- Do not poke eyes, ears, or other body parts with the device or insert the device into the mouth.
- If the device has a camera flash or light, do not use it close to the eyes of people or animals.

To prevent possible hearing damage when using a headset, do not listen to sound at high volume for long periods.

Your device uses a non-harmonised frequency and is intended for use in all European countries. The WLAN can be operated in the EU without restriction indoors, but cannot be operated outdoors.

Maintaining water and dust resistance

The device may be damaged if water or dust enters the device. Follow these tips carefully to prevent damage to the device and to maintain the water- and dust-resistant performance of the device.

- Do not immerse the device in water deeper than 1 m and keep it submerged for more than 30 minutes.
- Do not expose the device to **water moving with force**, such as ocean waves or waterfalls.
- Do not open the device's covers when the device is in water or in very humid places, such as swimming pools or bathrooms.
- Do not open the back cover using wet hands or when the device is wet.
- **The rubber seal fitted to the back cover** is an important component of the device. Take care when opening and closing the back cover to avoid damaging the rubber seal.

Also, ensure that the rubber seal is free from debris, such as sand or dust to prevent damage to the device.

- Do not expose the device to **salt water, ionised water, or soapy water**.
- The back cover may be loosened **if the device is dropped or receives an impact**. Ensure that the back cover is properly aligned and tightly closed.
- **If the device has been immersed in water or the microphone or the speaker is wet**, sound may not be heard clearly during a call. Ensure that the microphone or the speaker is clean and dry by wiping it with a dry cloth.
- If the device gets wet, dry it thoroughly with a clean, soft cloth.
- The water-resistant design of the device causes it to vibrate slightly in certain conditions. Vibrations in these conditions, such as when the volume level is high are normal and do not affect the device's performance.
- The touch screen and other features may not work properly **if the device is used in water or in other liquids**.

Your device has been tested in a controlled environment and certified to be water- and dust-resistant in specific situations (meets requirements of classification IP67 as described by the international standard IEC 60529 - Degrees of Protection provided by Enclosures [IP Code]; test conditions: 15 - 35 °C, 86 - 106 kPa, 1 meter, 30 minutes). Despite this classification, your device is not impervious to water damage in any situation.

Specific Absorption Rate (SAR) certification information

To view more information about the device's SAR certification, tap ▦ → **Settings** → **General** → **About device** → **Legal information** → **Safety information**.

THIS DEVICE MEETS INTERNATIONAL GUIDELINES FOR EXPOSURE TO RADIO WAVES

www.sar-tick.com

Your mobile is designed not to exceed the limits for exposure to radio waves recommended by international guidelines. The guidelines were developed by an independent scientific organisation (ICNIRP) and include a substantial safety margin designed to assure the safety of all persons, regardless of age and health.

The radio wave exposure guidelines use a unit of measurement known as the Specific Absorption Rate, or SAR. The SAR limit for mobile devices is 2.0 W/kg. The highest SAR values under the ICNIRP guidelines for this device model are:

SAR values for European countries: The SAR values below are only for devices developed for use in European countries.

Maximum SAR for this model and conditions under which it was recorded	
Head SAR	X.XXX W/kg
Body-worn SAR	X.XXX W/kg

Body-worn SAR testing has been carried out at a separation distance of X.X cm. To meet RF exposure guidelines during body-worn operation, the device should be positioned at least this distance away from the body.

For SAR values for all other countries: For SAR values specific to your model, visit *www.samsung.com/sar* and search for your region and device with the model number.

CE 0168

Declaration of Conformity

Samsung Electronics declares that this device complies with the essential requirements and relevant provisions of Directive 1999/5/EC.

Go to *www.samsung.com/mobile_doc* to view the Declaration of Conformity.

Copyright © 2014 Samsung Electronics

Health and safety information

Exposure to Radio Frequency (RF) Signals

Certification Information(SAR)

Your wireless device is a radio transmitter and receiver. It is designed and manufactured not to exceed the exposure limits for radio frequency (RF) energy set by the Federal Communications Commission (FCC) of the U.S. government. These FCC exposure limits are derived from the recommendations of two expert organizations, the National Counsel on Radiation Protection and Measurement (NCRP) and the Institute of Electrical and Electronics Engineers (IEEE). In both cases, the engineering experts drawn from industry, government,

The exposure limit set by the FCC for wireless mobile devices employs a unit of measurement known as the the rate of absorption of RF energy by the human body expressed in units of watts per kilogram (W/kg). The FCC requires wireless devices to comply with a safety limit of 1.6 watts per kilogram (1.6 W/kg). The FCC exposure limit incorporates a substantial margin of safety to give additional protection to the public and to account for any variations in measurements.

SAR tests are conducted using recommended operating positions accepted by the FCC with the device tested frequency bands. Although the SAR is determined of the device while operating can be well below the maximum value. This is because the device is designed to operate at multiple power

levels so as to use only the power required to reach the network. In general, the closer you are to a wireless base station antenna, the lower the power output.

Before a new model device is available for sale to the it does not exceed the exposure limit established by the FCC. Tests for each model are performed in positions and locations (e.g. near the body) as required by the FCC.

For typical operations, this model has been tested and meets the FCC exposure guidelines.

SAR information on this and other models can be viewed on-line at http://www.fcc.gov/oet/ea/fccid/. This site uses the FCC ID number **A3LSMT365**.

You can check the FCC ID on the rear case. Once you have the FCC ID number for a particular device, follow the instructions on the website and it should provide values for typical or maximum SAR for a particular device SAR information can also be obtained at www.fcc.gov/ cgb/sar.

Operating Environment

Remember to follow any special regulations in force in any area and always switch your device forbidden to use it, or when it may cause interference or danger. When connecting the device or any accessory to another device,

read its user’s guide for detailed safety instructions. Do not connect incompatible products.

FCC Notice and Cautions

FCC Notice

This device complies with Part 15 of the FCC Rules. Operation is subject to the following two conditions:

(1) this device may not cause harmful interference, and
(2) this device must accept any interference received, including interference that may cause undesired operation.

This equipment has been tested and found to comply with the limits for a Class B digital device, pursuant to part 15 of the FCC Rules. These limits are designed to provide reasonable protection against harmful interference in a residential installation. This equipment generates, uses and can radiate radio frequency energy and, if not installed and used in accordance with the instructions, may cause harmful interference to radio communications. However, there is no guarantee that interference will not occur in a particular installation. If this equipment does cause harmful interference to radio or television reception, which can be determined by turning the equipment off and on, the user is encouraged to try to correct the interference by one or more of the following measures:

- Reorient or relocate the receiving antenna.
-Increase the separation between the equipment and receiver.
- Connect the equipment into an outlet on a circuit from that to which the receiver is connected.
- Consult the dealer or an experienced radio/TV technician for help.

The device may cause TV or radio interference if used in close proximity to receiving equipment. The FCC can require you to stop using the device if such interference cannot be eliminated. Vehicles using petroleum gas (such as propane or butane) must comply with the National Fire Protection Standard (NFPA-58). For a copy of this standard, contact the National Fire Protection Association, One Battery march Park, Quincy, MA 02269, Attn: Publication Sales Division.

Cautions

Changes or modifications made in the radio device, not expressly approved by Samsung, will void the user’s authority to operate the equipment.
The use of any unauthorized accessories may be dangerous and void the device warranty if said accessories cause damage or a defect to the device.
Although your device is quite sturdy, it is a complex piece of equipment and can be broken. Avoid dropping, hitting, bending or sitting on it.
This device is capable of operating in 802.11a/n mode. For 802.11a/n devices operating in the frequency range of 5.15 - 5.25 GHz, they are restricted for indoor operations to reduce any potential harmful interference for Mobile Satellite Services (MSS) in the US. WIFI Access Points that are capable of allowing your device to operate in 802.11a/n mode (5.15 - 5.25

GHz band) are optimized for indoor use only. If your WIFI network is capable of operating in this mode, please restrict your WIFI use indoors to not violate federal regulations to protect Mobile Satellite Services.