PCTEST ENGINEERING LABORATORY, INC.
7185 Oakland Mills Road, Columbia, MD 21046 USA
Tel. +1.410.290.6652 / Fax +1.410.290.6654
http://www.pctestlab.com

SAR EVALUATION REPORT

Applicant Name:
Samsung Electronics, Co. Ltd.
129, Samsung-ro, Maetan dong,
Yeongtong-gu, Suwon-si
Gyeonggi-do 443-742, Korea

Date of Testing:
06/23/2014 - 06/24/2014 and
08/12/2014 - 08/28/2014
Test Site/Location:
PCTEST Lab, Columbia, MD, USA
Document Serial No.:
0Y1408121689.A3L

FCC ID: **A3LSMT807R4**

APPLICANT: **SAMSUNG ELECTRONICS, CO. LTD.**

DUT Type: Portable Tablet
Application Type: Certification
FCC Rule Part(s): CFR §2.1093
Model(s): SM-T807R4

Equipment Class	Band & Mode	Tx Frequency	SAR 1 gm Body (W/kg)
PCB	Cell. CDMA/EVDO	824.70 - 848.31 MHz	0.37
PCB	PCS CDMA/EVDO	1851.25 - 1908.75 MHz	0.74
PCB	LTE Band 12	701.5 - 713.5 MHz	0.34
PCB	LTE Band 5 (Cell)	826.5 - 846.5 MHz	0.32
PCB	LTE Band 4 (AWS)	1712.5 - 1752.5 MHz	0.24
PCB	LTE Band 2 (PCS)	1852.5 - 1907.5 MHz	1.10
DTS	2.4 GHz WLAN	2412 - 2462 MHz	0.59
DTS	Bluetooth LE	2402 - 2480 MHz	N/A
DTS	5.8 GHz WLAN	5745 - 5825 MHz	0.78
NII	5.2 GHz WLAN	5180 - 5240 MHz	0.58
NII	5.3 GHz WLAN	5260 - 5320 MHz	0.55
NII	5.5 GHz WLAN	5500 - 5700 MHz	0.64
DSS	Bluetooth	2402 - 2480 MHz	< 0.1
Simultaneous SAR per KDB 690783 D01v01r03:			1.59

This wireless portable device has been shown to be capable of compliance for localized specific absorption rate (SAR) for uncontrolled environment/general population exposure limits specified in ANSI/IEEE C95.1-1992 and has been tested in accordance with the measurement procedures specified in Section 1.7 of this report; for North American frequency bands only.

I attest to the accuracy of data. All measurements reported herein were performed by me or were made under my supervision and are correct to the best of my knowledge and belief. I assume full responsibility for the completeness of these measurements and vouch for the qualifications of all persons taking them. Test results reported herein relate only to the item(s) tested.

Randy Ortanez
President

ACCREDITED
TESTING CERT#2041.01

© 2014 PCTEST Engineering Laboratory, Inc.

TABLE OF CONTENTS

1 DEVICE UNDER TEST 3

2 LTE INFORMATION 8

3 INTRODUCTION 9

4 DOSIMETRIC ASSESSMENT 10

5 SAR TESTING PROCEDURES 11

6 RF EXPOSURE LIMITS 12

7 FCC MEASUREMENT PROCEDURES 13

8 RF CONDUCTED POWERS 17

9 SYSTEM VERIFICATION 37

10 SAR DATA SUMMARY 39

11 FCC MULTI-TX AND ANTENNA SAR CONSIDERATIONS 46

12 SAR MEASUREMENT VARIABILITY 61

13 EQUIPMENT LIST 62

14 MEASUREMENT UNCERTAINTIES 63

15 CONCLUSION 65

16 REFERENCES 66

APPENDIX A: SAR TEST PLOTS

APPENDIX B: SAR DIPOLE VERIFICATION PLOTS

APPENDIX C: PROBE AND DIPOLE CALIBRATION CERTIFICATES

APPENDIX D: SAR TISSUE SPECIFICATIONS

APPENDIX E: SAR SYSTEM VALIDATION

APPENDIX F: SAR TEST SETUP PHOTOGRAPHS

APPENDIX G: SENSOR TRIGGERING DATA SUMMARY

© 2014 PCTEST Engineering Laboratory, Inc.

1 DEVICE UNDER TEST

1.1 Device Overview

Band & Mode	Operating Modes	Tx Frequency
Cell. CDMA/EVDO	Data	824.70 - 848.31 MHz
PCS CDMA/EVDO	Data	1851.25 - 1908.75 MHz
LTE Band 12	Data	701.5 - 713.5 MHz
LTE Band 17	Data	706.5 - 713.5 MHz
LTE Band 5 (Cell)	Data	826.5 - 846.5 MHz
LTE Band 4 (AWS)	Data	1712.5 - 1752.5 MHz
LTE Band 2 (PCS)	Data	1852.5 - 1907.5 MHz
2.4 GHz WLAN	Data	2412 - 2462 MHz
Bluetooth LE	Data	2402 - 2480 MHz
5.8 GHz WLAN	Data	5745 - 5825 MHz
5.2 GHz WLAN	Data	5180 - 5240 MHz
5.3 GHz WLAN	Data	5260 - 5320 MHz
5.5 GHz WLAN	Data	5500 - 5700 MHz
Bluetooth	Data	2402 - 2480 MHz
ANT+	Data	2402 - 2480 MHz

1.2 Power Reduction for SAR

This device uses a proximity sensor for SAR compliance. The proximity sensor is activated when used in close proximity to the user's body. The proximity sensor triggers power reduction for all data modes and is only applicable for tablet operations. There is no power reduction mechanism for WIFI/BT modes for SAR purposes. There are no body-worn accessories for this device. Since the device is a full tablet size, the Body SAR was evaluated per FCC KDB Publication 616217 D04v01 for full sized tablets.

1.3 Nominal and Maximum Output Power Specifications

This device operates using the following maximum and nominal output power specifications. SAR values were scaled to the maximum allowed power to determine compliance per KDB Publication 447498 D01v05.

1.3.1 Maximum Power:

Mode / Band		Modulated Average (dBm)
Cell. CDMA/EVDO	Maximum	**25.0**
	Nominal	**24.5**
PCS CDMA/EVDO	Maximum	**25.0**
	Nominal	**24.5**

Mode / Band		Modulated Average (dBm)
LTE Band 12	Maximum	**23.5**
	Nominal	**23.0**
LTE Band 17	Maximum	**23.5**
	Nominal	**23.0**
LTE Band 5 (Cell)	Maximum	**23.5**
	Nominal	**23.0**
LTE Band 4 (AWS)	Maximum	**23.5**
	Nominal	**23.0**
LTE Band 2 (PCS)	Maximum	**23.5**
	Nominal	**23.0**

© 2014 PCTEST Engineering Laboratory, Inc.

Mode / Band		Modulated Average (dBm)
IEEE 802.11b (2.4 GHz) Ant 1 and Ant 2	Maximum	**14.5**
	Nominal	**14.0**
IEEE 802.11g (2.4 GHz) Ant 1 and Ant 2	Maximum	**12.5**
	Nominal	**12.0**
IEEE 802.11n (2.4 GHz) Ant 1 and Ant 2	Maximum	**12.5**
	Nominal	**12.0**
IEEE 802.11n (2.4 GHz) MIMO	Maximum	**17.5**
	Nominal	**17.0**
IEEE 802.11a (5 GHz) Ant 1 and Ant 2	Maximum	**9.5**
	Nominal	**9.0**
IEEE 802.11n (5 GHz) Ant 1 and Ant 2	Maximum	**9.5**
	Nominal	**9.0**
IEEE 802.11n (5 GHz) MIMO	Maximum	**12.0**
	Nominal	**11.5**
IEEE 802.11ac (5 GHz) Ant 1 and Ant 2	Maximum	**9.5**
	Nominal	**9.0**
IEEE 802.11ac (5 GHz) MIMO	Maximum	**12.0**
	Nominal	**11.5**
Bluetooth	Maximum	**11.5**
	Nominal	**11.0**
Bluetooth LE	Maximum	**9.0**
	Nominal	**8.5**

1.3.2Reduced Power -Body at 0 mm:

Mode / Band		Modulated Average (dBm)
Cell. CDMA/EVDO	Maximum	**19.0**
	Nominal	**18.5**
PCS CDMA/EVDO	Maximum	**12.5**
	Nominal	**12.0**

Mode / Band		Modulated Average (dBm)
LTE Band 12	Maximum	**17.5**
	Nominal	**17.0**
LTE Band 17	Maximum	**17.5**
	Nominal	**17.0**
LTE Band 5 (Cell)	Maximum	**17.0**
	Nominal	**16.5**
LTE Band 4 (AWS)	Maximum	**12.5**
	Nominal	**12.0**
LTE Band 2 (PCS)	Maximum	**12.5**
	Nominal	**12.0**

© 2014 PCTEST Engineering Laboratory, Inc.

1.4 DUT Antenna Locations

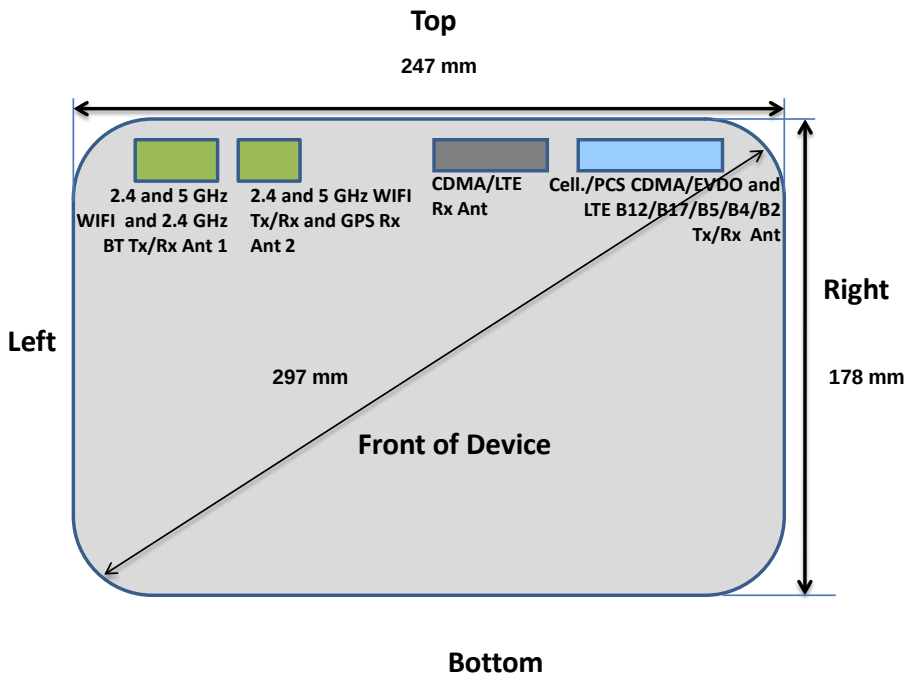

Note: Exact antenna dimensions and separation distances are shown in the Technical Descriptions in the FCC Filing.

Figure 1-1
DUT Antenna Locations

Table 1-1
Mobile Sides for SAR Testing

Mode	Back	Top	Bottom	Right	Left
Cell. EVDO	Yes	Yes	No	Yes	No
PCS EVDO	Yes	Yes	No	Yes	No
LTE Band 12	Yes	Yes	No	Yes	No
LTE Band 5 (Cell)	Yes	Yes	No	Yes	No
LTE Band 4 (AWS)	Yes	Yes	No	Yes	No
LTE Band 2 (PCS)	Yes	Yes	No	Yes	No
2.4 GHz WLAN	Yes	Yes	No	No	Yes
5 GHz WLAN	Yes	Yes	No	No	Yes
Bluetooth	Yes	Yes	No	No	Yes

Note: Per FCC KDB 616217 D04v01r01, Particular DUT edges were not required to be evaluated for SAR based on the SAR exclusion threshold in KDB 447498 D01v05r01.

© 2014 PCTEST Engineering Laboratory, Inc.

1.5 Simultaneous Transmission Capabilities

According to FCC KDB Publication 447498 D05v01, transmitters are considered to be transmitting simultaneously when there is overlapping transmission, with the exception of transmissions during network hand-offs with maximum hand-off duration less than 30 seconds. Possible transmission paths for the DUT are shown in Figure 1-2 and are color-coded to indicate communication modes which share the same path. Modes which share the same transmission path cannot transmit simultaneously with one another. This device supports MIMO Tx for WLAN 802.11n/ac. Each WLAN antenna can transmit independently or together when operating with MIMO.

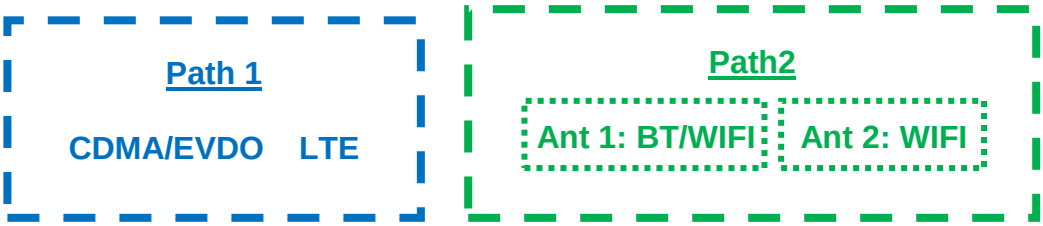

Figure 1-2
Simultaneous Transmission Paths

This device contains multiple transmitters that may operate simultaneously, and therefore requires a simultaneous transmission analysis according to FCC KDB Publication 447498 D01v05 3) procedures.

Table 1-2
Simultaneous Transmission Scenarios

No.	Capable Transmit Configuration	Body
1	LTE + 2.4 GHz WI-FI	Yes
2	LTE + 5 GHz WI-FI	Yes
3	LTE + 2.4 GHz Bluetooth	Yes
4	CDMA/EVDO data + 2.4 GHz WI-FI	Yes
5	CDMA/EVDO data + 5 GHz WI-FI	Yes
6	CDMA/EVDO data + 2.4 GHz Bluetooth	Yes

Notes:

1. CDMA/EVDO and LTE share the same antenna path and cannot transmit simultaneously.
2. This device supports 2x2 MIMO Tx for WLAN 802.11n/ac. Each WLAN antenna can transmit independently or together when operating with MIMO.

1.6 SAR Test Exclusions Applied

(A) WIFI/BT

Per FCC KDB 447498 D01v05, the SAR exclusion threshold for distances <50mm is defined by the following equation:

$$\frac{Max\ Power\ of\ Channel\ (mW)}{Test\ Separation\ Dist\ (mm)} * \sqrt{Frequency(GHz)} \leq 3.0$$

Based on the maximum conducted power of Bluetooth LE (rounded to the nearest mW) and the antenna to user separation distance, Bluetooth LE SAR was not required; [(8/5)* √2.48] = 2.5< 3.0. Per KDB Publication 447498 D01v05, the maximum power of the channel was rounded to the nearest mW before calculation. To ensure worst case SAR is excluded the high channel frequency was used in the calculation.

© 2014 PCTEST Engineering Laboratory, Inc.

This device supports IEEE 802.11ac with the following features:

a) Up to 80 MHz Bandwidth only
b) No aggregate channel configurations
c) 2 Tx antenna output
d) 256 QAM is supported
e) No new 5 GHz channels

(B) Licensed Transmitter(s)

LTE SAR for the higher modulations and lower bandwidths were not tested since the maximum average output power of all required channels and configurations was not more than 0.5 dB higher than the highest bandwidth; and the reported LTE SAR for the highest bandwidth was less than 1.45 W/kg for all configurations according to FCC KDB 941225 D05v02.

This device supports both LTE B12 and LTE B17. Since the supported frequency span for LTE B17 falls completely within the supported frequency span for LTE B12, both LTE bands have the same target power, and both LTE bands share the same transmission path, SAR was only assessed for LTE B12.

1.7 Guidance Applied

- FCC KDB Publication 941225 D01v02 & D05v02r03
- FCC KDB Publication 248227 D01v01r02 (SAR Considerations for 802.11 Devices)
- FCC KDB Publication 447498 D01v05r02 (General SAR Guidance)
- FCC KDB Publication 865664 D01v01r03 & D02v01r01 (SAR Measurements up to 6 GHz)
- FCC KDB Publication 616217 D04v01r01 (Tablet SAR Consideration)
- April 2013 TCB workshop notes (802.11ac)

1.8 Device Serial Numbers

Several samples with identical hardware were used to support SAR testing. The manufacturer has confirmed that the device(s) tested have the same physical, mechanical and thermal characteristics and are within operational tolerances expected for production units.

	Reduced Power Serial Number	Max. Power Serial Number
Cell. CDMA/EVDO	FCC#8	FCC#5
PCS CDMA/EVDO	FCC#8	FCC#5
LTE Band 12	FCC#1	FCC#4
LTE Band 5 (Cell)	FCC#1	FCC#4
LTE Band 4 (AWS)	FCC#1	FCC#4
LTE Band 2 (PCS)	FCC#3	FCC#4
2.4 GHz Bluetooth	N/A	FCC#7
2.4 GHz WLAN	N/A	FCC#7
5 GHz WLAN	N/A	FCC#7

© 2014 PCTEST Engineering Laboratory, Inc.

2 LTE INFORMATION

LTE Information			
FCC ID	**A3LSMT807R4**		
Form Factor	Portable Tablet		
Frequency Range of each LTE transmission band	LTE Band 12 (701.5 - 713.5 MHz)		
	LTE Band 17 (706.5 - 713.5 MHz)		
	LTE Band 5 (Cell) (826.5 - 846.5 MHz)		
	LTE Band 4 (AWS) (1712.5 - 1752.5 MHz)		
	LTE Band 2 (PCS) (1852.5 - 1907.5 MHz)		
Channel Bandwidths	LTE Band 12: 5 MHz, 10 MHz		
	LTE Band 17: 5 MHz, 10 MHz		
	LTE Band 5 (Cell): 5 MHz, 10 MHz		
	LTE Band 4 (AWS): 5 MHz, 10 MHz, 15 MHz, 20 MHz		
	LTE Band 2 (PCS): 5 MHz, 10 MHz, 15 MHz, 20 MHz		
Channel Numbers and Frequencies (MHz)	Low	Mid	High
LTE Band 12: 5 MHz	701.5 (23035)	707.5 (23095)	713.5 (23155)
LTE Band 12: 10 MHz	704 (23060)	707.5 (23095)	711 (23130)
LTE Band 17: 5 MHz	706.5 (23755)	710 (23790)	713.5 (23825)
LTE Band 17: 10 MHz	709 (23780)	710 (23790)	711 (23800)
LTE Band 5 (Cell): 5 MHz	826.5 (20425)	836.5 (20525)	846.5 (20625)
LTE Band 5 (Cell): 10 MHz	829 (20450)	836.5 (20525)	844 (20600)
LTE Band 4 (AWS): 5 MHz	1712.5 (19975)	1732.5 (20175)	1752.5 (20375)
LTE Band 4 (AWS): 10 MHz	1715 (20000)	1732.5 (20175)	1750 (20350)
LTE Band 4 (AWS): 15 MHz	1717.5 (20025)	1732.5 (20175)	1747.5 (20325)
LTE Band 4 (AWS): 20 MHz	1720 (20050)	1732.5 (20175)	1745 (20300)
LTE Band 2 (PCS): 5 MHz	1852.5 (18625)	1880 (18900)	1907.5 (19175)
LTE Band 2 (PCS): 10 MHz	1855 (18650)	1880 (18900)	1905 (19150)
LTE Band 2 (PCS): 15 MHz	1857.5 (18675)	1880 (18900)	1902.5 (19125)
LTE Band 2 (PCS): 20 MHz	1860 (18700)	1880 (18900)	1900 (19100)
UE Category	3		
Modulations Supported in UL	QPSK, 16QAM		
LTE MPR Permanently implemented per 3GPP TS 36.101 section 6.2.3~6.2.5? (manufacturer attestation to be provided)	YES		
A-MPR (Additional MPR) disabled for SAR Testing?	YES		

© 2014 PCTEST Engineering Laboratory, Inc.

3 INTRODUCTION

The FCC and Industry Canada have adopted the guidelines for evaluating the environmental effects of radio frequency (RF) radiation in ET Docket 93-62 on Aug. 6, 1996 and Health Canada Safety Code 6 to protect the public and workers from the potential hazards of RF emissions due to FCC-regulated portable devices. [1]

The safety limits used for the environmental evaluation measurements are based on the criteria published by the American National Standards Institute (ANSI) for localized specific absorption rate (SAR) in IEEE/ANSI C95.1-1992 Standard for Safety Levels with Respect to Human Exposure to Radio Frequency Electromagnetic Fields, 3 kHz to 300 GHz [3] and Health Canada RF Exposure Guidelines Safety Code 6 [22]. The measurement procedure described in IEEE/ANSI C95.3-2002 Recommended Practice for the Measurement of Potentially Hazardous Electromagnetic Fields - RF and Microwave [4] is used for guidance in measuring the Specific Absorption Rate (SAR) due to the RF radiation exposure from the Equipment Under Test (EUT). These criteria for SAR evaluation are similar to those recommended by the International Committee for Non-Ionizing Radiation Protection (ICNIRP) in Biological Effects and Exposure Criteria for Radiofrequency Electromagnetic Fields," Report No. Vol 74. SAR is a measure of the rate of energy absorption due to exposure to an RF transmitting source. SAR values have been related to threshold levels for potential biological hazards.

3.1 SAR Definition

Specific Absorption Rate is defined as the time derivative (rate) of the incremental energy (dU) absorbed by (dissipated in) an incremental mass (dm) contained in a volume element (dV) of a given density (ρ). It is also defined as the rate of RF energy absorption per unit mass at a point in an absorbing body (see Equation 3-1).

Equation 3-1
SAR Mathematical Equation

$$SAR = \frac{d}{dt}\left(\frac{dU}{dm}\right) = \frac{d}{dt}\left(\frac{dU}{\rho dv}\right)$$

SAR is expressed in units of Watts per Kilogram (W/kg).

$$SAR = \frac{\sigma \cdot E^2}{\rho}$$

where:

σ = conductivity of the tissue-simulating material (S/m)
ρ = mass density of the tissue-simulating material (kg/m^3)
E = Total RMS electric field strength (V/m)

NOTE: The primary factors that control rate of energy absorption were found to be the wavelength of the incident field in relation to the dimensions and geometry of the irradiated organism, the orientation of the organism in relation to the polarity of field vectors, the presence of reflecting surfaces, and whether conductive contact is made by the organism with a ground plane.[6]

© 2014 PCTEST Engineering Laboratory, Inc.

4 DOSIMETRIC ASSESSMENT

4.1 Measurement Procedure

The evaluation was performed using the following procedure compliant to FCC KDB Publication 865664 D01v01 and IEEE 1528-2013:

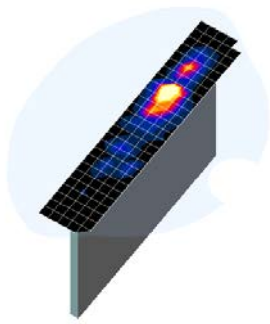

Figure 4-1
Sample SAR Area Scan

1. The SAR distribution at the exposed side of the head or body was measured at a distance no greater than 5.0 mm from the inner surface of the shell. The area covered the entire dimension of the device-head and body interface and the horizontal grid resolution was determined per FCC KDB Publication 865664 D01v01 (See Table 4-1) and IEEE 1528-2013.
2. The point SAR measurement was taken at the maximum SAR region determined from Step 1 to enable the monitoring of SAR fluctuations/drifts during the 1g/10g cube evaluation. SAR at this fixed point was measured and used as a reference value.
3. Based on the area scan data, the peak of the region with maximum SAR was determined by spline interpolation. Around this point, a volume was assessed according to the measurement resolution and volume size requirements of FCC KDB Publication 865664 D01v01 (See Table 4-1) and IEEE 1528-2013. On the basis of this data set, the spatial peak SAR value was evaluated with the following procedure (see references or the DASY manual online for more details):

   a. SAR values at the inner surface of the phantom are extrapolated from the measured values along the line away from the surface with spacing no greater than that in Table 4-1. The extrapolation was based on a least-squares algorithm. A polynomial of the fourth order was calculated through the points in the z-axis (normal to the phantom shell).

   b. After the maximum interpolated values were calculated between the points in the cube, the SAR was averaged over the spatial volume (1g or 10g) using a 3D-Spline interpolation algorithm. The 3D-spline is composed of three one-dimensional splines with the "Not a knot" condition (in x, y, and z directions). The volume was then integrated with the trapezoidal algorithm. One thousand points (10 x 10 x 10) were obtained through interpolation, in order to calculate the averaged SAR.

   c. All neighboring volumes were evaluated until no neighboring volume with a higher average value was found.
4. The SAR reference value, at the same location as step 2, was re-measured after the zoom scan was complete to calculate the SAR drift. If the drift deviated by more than 5%, the SAR test and drift measurements were repeated.

Table 4-1
Area and Zoom Scan Resolutions per FCC KDB Publication 865664 D01v01*

Frequency	Maximum Area Scan Resolution (mm) (Δx_{area}, Δy_{area})	Maximum Zoom Scan Resolution (mm) (Δx_{zoom}, Δy_{zoom})	Maximum Zoom Scan Spatial Resolution (mm)			Minimum Zoom Scan Volume (mm) (x,y,z)
			Uniform Grid	Graded Grid		
			$\Delta z_{zoom}(n)$	$\Delta z_{zoom}(1)$*	$\Delta z_{zoom}(n>1)$*	
≤ 2 GHz	≤ 15	≤ 8	≤ 5	≤ 4	≤ 1.5*$\Delta z_{zoom}(n-1)$	≥ 30
2-3 GHz	≤ 12	≤ 5	≤ 5	≤ 4	≤ 1.5*$\Delta z_{zoom}(n-1)$	≥ 30
3-4 GHz	≤ 12	≤ 5	≤ 4	≤ 3	≤ 1.5*$\Delta z_{zoom}(n-1)$	≥ 28
4-5 GHz	≤ 10	≤ 4	≤ 3	≤ 2.5	≤ 1.5*$\Delta z_{zoom}(n-1)$	≥ 25
5-6 GHz	≤ 10	≤ 4	≤ 2	≤ 2	≤ 1.5*$\Delta z_{zoom}(n-1)$	≥ 22

*Also compliant to IEEE 1528-2013 Table 6

© 2014 PCTEST Engineering Laboratory, Inc.

5 SAR TESTING PROCEDURES

5.1 SAR Testing for Tablet per KDB Publication 616217 D04

This device is used in full sized tablet exposure conditions due to its size. Per FCC KDB 616217, the back surface and edges of the tablet should be tested for SAR compliance with the tablet touching the phantom. The SAR Exclusion Threshold in KDB 447498 D01v05 can be applied to determine SAR test exclusion for adjacent edge configurations. The closest distance from the antenna to an adjacent tablet edge is used to determine if SAR testing is required for the adjacent edges, with the adjacent edge positioned against the phantom and the edge containing the antenna positioned perpendicular to the phantom.

5.2 Additional Test Positions due to Proximity Sensor Considerations

This device uses a proximity sensor to reduce data powers in tablet-device use conditions.

While the device's antenna is within a certain distance of the user, the sensor activates and reduces the maximum output power allowed. However, the sensor is not active when the device is moved beyond the sensor triggering distance and the maximum output power is no longer limited. Therefore, an additional exposure condition is needed in the vicinity of the triggering distance to ensure SAR is compliant when the device is allowed to operate at a non-reduced output power level.

FCC KDB 616217 D04 Section 6 was used as a guideline for selecting SAR test distances for this device at these additional exposure conditions. Since the proximity sensor activation distance for the back side of the device is 22 mm, a conservative distance of 21 mm was tested for SAR on the back side at maximum power. Since the proximity sensor activation distance for the top edge of the device is 20 mm, a conservative distance of 19 mm was tested for SAR on the top edge at maximum power. Sensor triggering distance summary data is included in Appendix G.

The sensor is designed to support sufficient detection range and sensitivity to cover regions of the sensors in all applicable directions since the sensor entirely covers the antenna.

© 2014 PCTEST Engineering Laboratory, Inc.

6 RF EXPOSURE LIMITS

6.1 Uncontrolled Environment

UNCONTROLLED ENVIRONMENTS are defined as locations where there is the exposure of individuals who have no knowledge or control of their exposure. The general population/uncontrolled exposure limits are applicable to situations in which the general public may be exposed or in which persons who are exposed as a consequence of their employment may not be made fully aware of the potential for exposure or cannot exercise control over their exposure. Members of the general public would come under this category when exposure is not employment-related; for example, in the case of a wireless transmitter that exposes persons in its vicinity.

6.2 Controlled Environment

CONTROLLED ENVIRONMENTS are defined as locations where there is exposure that may be incurred by persons who are aware of the potential for exposure, (i.e. as a result of employment or occupation). In general, occupational/controlled exposure limits are applicable to situations in which persons are exposed as a consequence of their employment, who have been made fully aware of the potential for exposure and can exercise control over their exposure. This exposure category is also applicable when the exposure is of a transient nature due to incidental passage through a location where the exposure levels may be higher than the general population/uncontrolled limits, but the exposed person is fully aware of the potential for exposure and can exercise control over his or her exposure by leaving the area or by some other appropriate means.

Table 6-1
SAR Human Exposure Specified in ANSI/IEEE C95.1-1992 and Health Canada Safety Code 6

HUMAN EXPOSURE LIMITS		
	UNCONTROLLED ENVIRONMENT *General Population* (W/kg) or (mW/g)	CONTROLLED ENVIRONMENT *Occupational* (W/kg) or (mW/g)
Peak Spatial Average SAR Head	1.6	8.0
Whole Body SAR	0.08	0.4
Peak Spatial Average SAR Hands, Feet, Ankle, Wrists, etc.	4.0	20

1. The Spatial Peak value of the SAR averaged over any 1 gram of tissue (defined as a tissue volume in the shape of a cube) and over the appropriate averaging time.
2. The Spatial Average value of the SAR averaged over the whole body.
3. The Spatial Peak value of the SAR averaged over any 10 grams of tissue (defined as a tissue volume in the shape of a cube) and over the appropriate averaging time.

© 2014 PCTEST Engineering Laboratory, Inc.

7 FCC MEASUREMENT PROCEDURES

Power measurements were performed using a base station simulator under digital average power.

7.1 Measured and Reported SAR

Per FCC KDB Publication 447498 D01v05, When SAR is not measured at the maximum power level allowed for production units, the results must be scaled to the maximum tune-up tolerance limit according to the power applied to the individual channels tested to determine compliance. For simultaneous transmission, the measured aggregate SAR must be scaled according to the sum of the differences between the maximum tune-up tolerance and actual power used to test each transmitter. When SAR is measured at or scaled to the maximum tune-up tolerance limit, the results are referred to as *reported* SAR. The highest *reported* SAR results are identified on the grant of equipment authorization according to procedures in KDB 690783 D01v01r02.

7.2 Procedures Used to Establish RF Signal for SAR

The following procedures are according to FCC KDB Publication 941225 D01 “SAR Measurement Procedures for 3G Devices” v02, October 2007.

The device was placed into a simulated call using a base station simulator in a RF shielded chamber. Establishing connections in this manner ensure a consistent means for testing SAR and are recommended for evaluating SAR [4]. Devices under test were evaluated prior to testing, with a fully charged battery and were configured to operate at maximum output power. In order to verify that the device was tested throughout the SAR test at maximum output power, the SAR measurement system measures a “point SAR” at an arbitrary reference point at the start and end of the 1 gram SAR evaluation, to assess for any power drifts during the evaluation. If the power drift deviated by more than 5%, the SAR test and drift measurements were repeated.

7.3 SAR Measurement Conditions for CDMA2000

The following procedures were performed according to FCC KDB Publication 941225 D01 “SAR Measurement Procedures for 3G Devices” v02, October 2007.

7.3.1 Output Power Verification

See 3GPP2 C.S0011/TIA-98-E as recommended by “SAR Measurement Procedures for 3G Devices” v02, October 2007. Maximum output power is verified on the High, Middle and Low channels according to procedures in section 4.4.5.2 of 3GPP2 C.S0011/TIA-98-E. SO55 tests were measured with power control bits in the “All Up” condition.

1. If the mobile station (MS) supports Reverse TCH RC 1 and Forward TCH RC 1, set up a call using Fundamental Channel Test Mode 1 (RC=1/1) with 9600 bps data rate only.
2. Under RC1, C.S0011 Table 4.4.5.2-1, Table 7-1 parameters were applied.
3. If the MS supports the RC 3 Reverse FCH, RC3 Reverse SCH_0 and demodulation of RC 3,4, or 5, set up a call using Supplemental Channel Test Mode 3 (RC 3/3) with 9600 bps Fundamental Channel and 9600 bps SCH0 data rate.
4. Under RC3, C.S0011 Table 4.4.5.2-2, Table 7-2 was applied.

© 2014 PCTEST Engineering Laboratory, Inc.

Table 7-1
Parameters for Max. Power for RC1

Parameter	Units	Value
I_{or}	dBm/1.23 MHz	-104
$\frac{\text{Pilot } E_c}{I_{or}}$	dB	-7
$\frac{\text{Traffic } E_c}{I_{or}}$	dB	-7.4

Table 7-2
Parameters for Max. Power for RC3

Parameter	Units	Value
I_{or}	dBm/1.23 MHz	-86
$\frac{\text{Pilot } E_c}{I_{or}}$	dB	-7
$\frac{\text{Traffic } E_c}{I_{or}}$	dB	-7.4

5. FCHs were configured at full rate for maximum SAR with “All Up” power control bits.

7.3.2 Body SAR Measurements for EVDO Data Devices

Body SAR is measured using Subtype 0/1 Physical Layer configurations for Rev. 0 per KDB Publication 941225 D01 procedures for “1x Ev-Do data Devices”. SAR for Subtype 2 Physical layer configurations is not required for Rev. A when the maximum average output of each RF channels is less than that measured in Subtype 0/1 Physical layer configurations. Otherwise, SAR is measured on the maximum output channel for Rev. A using the exposure configuration that results in the highest SAR for the RF channels in Rev. 0. The AT is tested with a Reverse Data Channel rate of 153.6 kbps in Subtype 0/1 Physical Layer configurations; and a Reverse Data Channel payload size of 4096 bits and Termination Target of 16 slots in Subtype 2 Physical Layer configurations.

SAR is not required for 1x RTT for Ev-Do devices that also support 1x RTT voice and/or data operations, when the maximum average output of each channel is less than 1⁄4 dB higher than that measured in Subtype 0/1 Physical Layer configurations for Rev. 0. Otherwise, CDMA “Body-SAR Measurement” procedures for “CDMA 2000 1x Handsets” were applied.

7.4 SAR Measurement Conditions for LTE

LTE modes were tested according to FCC KDB 941225 D05v02 publication. Please see notes after the tabulated SAR data for required test configurations. Establishing connections with base station simulators ensure a consistent means for testing SAR and are recommended for evaluating SAR [4]. The R&S CMW500 was used for LTE output power measurements and SAR testing. Closed loop power control was used so the UE transmits with maximum output power during SAR testing. SAR tests were performed with the same number of RB and RB offsets transmitting on all TTI frames (maximum TTI).

7.4.1 Spectrum Plots for RB Configurations

A properly configured base station simulator was used for SAR tests and power measurements. Therefore, spectrum plots for RB configurations were not required to be included in this report.

7.4.2 MPR

MPR is permanently implemented for this device by the manufacturer. The specific manufacturer target MPR is indicated alongside the SAR results. MPR is enabled for this device, according to 3GPP TS36.101 Section 6.2.3 – 6.2.5 under Table 6.2.3-1.

7.4.3 A-MPR

A-MPR (Additional MPR) has been disabled for all SAR tests by setting NS=01 on the base station simulator.

7.4.4 Required RB Size and RB Offsets for SAR Testing

According to FCC KDB 941225 D05v02r01:

© 2014 PCTEST Engineering Laboratory, Inc.

a. Per Section 5.2.1, SAR is required for QPSK 1 RB Allocation for the largest bandwidth
    i. The required channel and offset combination with the highest maximum output power is required for SAR.
    ii. When the reported SAR is ≤ 0.8 W/kg, testing of the remaining RB offset configurations and required test channels is not required. Otherwise, SAR is required for the remaining required test channels using the RB offset configuration with highest output power for that channel.
    iii. When the reported SAR for a required test channel is > 1.45 W/kg, SAR is required for all RB offset configurations for that channel.
b. Per Section 5.2.2, SAR is required for 50% RB allocation using the largest bandwidth following the same procedures outlined in Section 5.2.1.
c. Per Section 5.2.3, QPSK SAR is not required for the 100% allocation when the highest maximum output power for the 100% allocation is less than the highest maximum output power of the 1 RB and 50% RB allocations and the reported SAR for the 1 RB and 50% RB allocations is < 0.8 W/kg.
d. Per Section 5.2.4 and 5.3, SAR tests for higher order modulations and lower bandwidths configurations are not required when the conducted power of the required test configurations determined by Sections 5.2.1 through 5.2.3 is less than or equal to ½ dB higher than the equivalent configuration using QPSK modulation and when the QPSK SAR for those configurations is <1.45 W/kg.
e.

7.5 SAR Testing with 802.11 Transmitters

Normal network operating configurations are not suitable for measuring the SAR of 802.11 a/b/g/n transmitters. Unpredictable fluctuations in network traffic and antenna diversity conditions can introduce undesirable variations in SAR results. The SAR for these devices should be measured using chipset based test mode software to ensure the results are consistent and reliable. See KDB Publication 248227 D01v01r02 for more details.

7.5.1 General Device Setup

Chipset based test mode software is hardware dependent and generally varies among manufacturers. The device operating parameters established in test mode for SAR measurements must be identical to those programmed in production units, including output power levels, amplifier gain settings and other RF performance tuning parameters. The test frequencies should correspond to actual channel frequencies defined for domestic use. SAR for devices with switched diversity should be measured with only one antenna transmitting at a time during each SAR measurement, according to a fixed modulation and data rate. The same data pattern should be used for all measurements.

7.5.2 Frequency Channel Configurations [24]

For 2.4 GHz, the highest average RF output power channel between the low, mid and high channel at the lowest data rate was selected for SAR evaluation in 802.11b mode. 802.11g/n modes and higher data rates for 802.11b were additionally evaluated for SAR if the output power of the respective mode was 0.25 dB or higher than the powers of the SAR configurations tested in the 802.11b mode.

For 5 GHz, the highest average RF output power channel across the default test channels at the lowest data rate was selected for SAR evaluation in 802.11a. When the adjacent channels are higher in power then the default channels, these “required channels” were considered instead of the default channels for SAR testing. 802.11n modes and higher data rates for 802.11a/n were evaluated only if the respective mode was higher than 0.25 dB or more than the 802.11a mode. 802.11ac SAR was evaluated for highest 802.11a configuration in each 5 GHz band and each exposure condition. 802.11ac modes were additionally evaluated for SAR if the output power for the respective mode was more than 0.25 dB higher than powers of 802.11a modes.

© 2014 PCTEST Engineering Laboratory, Inc.

If the maximum extrapolated peak SAR of the zoom scan for the highest output channel was less than 1.6 W/kg and if the 1g averaged SAR was less than 0.8 W/kg, SAR testing was not required for the other test channels in the band.

7.5.3 MIMO SAR considerations

Per KDB 248227, SAR for MIMO was measured with both transmitting simultaneously and was evaluated independently of SISO operation. For 2.4 GHz MIMO and 5 GHz MIMO, 802.11n 20 MHz BW was evaluated. Other 802.11 modes and bandwidths were not investigated for MIMO operations since the maximum allowed output power (including tolerance) was not higher for these modes.

© 2014 PCTEST Engineering Laboratory, Inc.

8 RF CONDUCTED POWERS

8.1 CDMA Conducted Powers

Table 8-1
Maximum CDMA Conducted Powers

Band	Channel	Rule Part	Frequency	TDSO SO32 [dBm]	TDSO SO32 [dBm]	1x EvDO Rev. 0 [dBm]	1x EvDO Rev. A [dBm]
	F-RC		MHz	FCH+SCH	FCH	(RTAP)	(RETAP)
Cellular	1013	22H	824.7	24.29	24.26	24.37	24.34
	384	22H	836.52	24.41	24.31	24.48	24.42
	777	22H	848.31	24.22	24.16	24.32	24.30
PCS	25	24E	1851.25	24.25	24.22	24.71	24.66
	600	24E	1880	24.12	23.99	24.60	24.57
	1175	24E	1908.75	23.81	23.89	24.30	23.91

Table 8-2
Reduced CDMA Conducted Powers

Band	Channel	Rule Part	Frequency	TDSO SO32 [dBm]	TDSO SO32 [dBm]	1x EvDO Rev. 0 [dBm]	1x EvDO Rev. A [dBm]
	F-RC		MHz	FCH+SCH	FCH	(RTAP)	(RETAP)
Cellular	1013	22H	824.7	18.70	18.70	18.72	18.70
	384	22H	836.52	18.60	18.57	18.61	18.60
	777	22H	848.31	18.54	18.52	18.50	18.49
PCS	25	24E	1851.25	11.97	11.96	12.20	12.05
	600	24E	1880	11.68	11.60	11.79	11.70
	1175	24E	1908.75	11.72	11.86	11.84	11.79

Per KDB Publication 941225 D01v02, body SAR is measured using Subtype 0/1 Physical Layer configurations for Rev. 0. If the average output power of Subtype 2 for Rev. A is less than the Rev. 0 power levels, then Rev. A SAR is not required. Otherwise, SAR is measured on the maximum output channel for Rev. A using the exposure configuration that results in the highest SAR for that RF channel in Rev. 0. SAR is not required for 1x RTT for Ev-Do hotspot devices when the maximum average output of each channel is less than 1⁄4 dB higher than that measured in Subtype 0/1 Physical Layer configurations for Rev. 0

Figure 8-1
Power Measurement Setup

© 2014 PCTEST Engineering Laboratory, Inc.

8.2 LTE Conducted Powers

8.2.1 LTE Band 12 Maximum Power

Table 8-3
LTE Band 12 Conducted Powers - 10 MHz Bandwidth

	Frequency [MHz]	Channel	Bandwidth [MHz]	Modulation	RB Size	RB Offset	Conducted Power [dBm]	MPR Allowed per 3GPP [dB]	MPR [dB]
Mid	707.5	23095	10	QPSK	1	0	22.90	0	0
	707.5	23095	10	QPSK	1	25	22.91	0	0
	707.5	23095	10	QPSK	1	49	**23.03**	0	0
	707.5	23095	10	QPSK	25	0	21.69	0-1	1
	707.5	23095	10	QPSK	25	12	21.74	0-1	1
	707.5	23095	10	QPSK	25	25	**21.87**	0-1	1
	707.5	23095	10	QPSK	50	0	21.56	0-1	1
	707.5	23095	10	16QAM	1	0	21.76	0-1	1
	707.5	23095	10	16QAM	1	25	21.74	0-1	1
	707.5	23095	10	16QAM	1	49	21.69	0-1	1
	707.5	23095	10	16QAM	25	0	20.60	0-2	2
	707.5	23095	10	16QAM	25	12	20.66	0-2	2
	707.5	23095	10	16QAM	25	25	20.76	0-2	2
	707.5	23095	10	16QAM	50	0	20.58	0-2	2

Note: LTE Band 12 at 10 MHz bandwidth does not support three non-overlapping channels. Per KDB Publication 941225 D05v02, when a device supports overlapping channel assignment in a channel bandwidth configuration, the middle channel of the group of overlapping channels should be selected for testing.

Table 8-4
LTE Band 12 Conducted Powers - 5 MHz Bandwidth

	Frequency [MHz]	Channel	Bandwidth [MHz]	Modulation	RB Size	RB Offset	Conducted Power [dBm]	MPR Allowed per 3GPP [dB]	MPR [dB]
Low	701.5	23035	5	QPSK	1	0	22.90	0	0
	701.5	23035	5	QPSK	1	12	22.76	0	0
	701.5	23035	5	QPSK	1	24	22.70	0	0
	701.5	23035	5	QPSK	12	0	21.73	0-1	1
	701.5	23035	5	QPSK	12	6	21.80	0-1	1
	701.5	23035	5	QPSK	12	13	21.82	0-1	1
	701.5	23035	5	QPSK	25	0	21.74	0-1	1
	701.5	23035	5	16-QAM	1	0	21.97	0-1	1
	701.5	23035	5	16-QAM	1	12	21.79	0-1	1
	701.5	23035	5	16-QAM	1	24	21.80	0-1	1
	701.5	23035	5	16-QAM	12	0	20.87	0-2	2
	701.5	23035	5	16-QAM	12	6	20.78	0-2	2
	701.5	23035	5	16-QAM	12	13	20.82	0-2	2
	701.5	23035	5	16-QAM	25	0	20.62	0-2	2
Mid	707.5	23095	5	QPSK	1	0	22.62	0	0
	707.5	23095	5	QPSK	1	12	22.80	0	0
	707.5	23095	5	QPSK	1	24	22.77	0	0
	707.5	23095	5	QPSK	12	0	21.77	0-1	1
	707.5	23095	5	QPSK	12	6	21.89	0-1	1
	707.5	23095	5	QPSK	12	13	21.74	0-1	1
	707.5	23095	5	QPSK	25	0	21.71	0-1	1
	707.5	23095	5	16-QAM	1	0	21.62	0-1	1
	707.5	23095	5	16-QAM	1	12	21.81	0-1	1
	707.5	23095	5	16-QAM	1	24	21.80	0-1	1
	707.5	23095	5	16-QAM	12	0	20.78	0-2	2
	707.5	23095	5	16-QAM	12	6	20.88	0-2	2
	707.5	23095	5	16-QAM	12	13	20.78	0-2	2
	707.5	23095	5	16-QAM	25	0	20.71	0-2	2
High	713.5	23155	5	QPSK	1	0	22.78	0	0
	713.5	23155	5	QPSK	1	12	22.94	0	0
	713.5	23155	5	QPSK	1	24	22.88	0	0
	713.5	23155	5	QPSK	12	0	21.86	0-1	1
	713.5	23155	5	QPSK	12	6	21.93	0-1	1
	713.5	23155	5	QPSK	12	13	21.91	0-1	1
	713.5	23155	5	QPSK	25	0	21.87	0-1	1
	713.5	23155	5	16-QAM	1	0	21.83	0-1	1
	713.5	23155	5	16-QAM	1	12	21.89	0-1	1
	713.5	23155	5	16-QAM	1	24	21.85	0-1	1
	713.5	23155	5	16-QAM	12	0	20.79	0-2	2
	713.5	23155	5	16-QAM	12	6	20.91	0-2	2
	713.5	23155	5	16-QAM	12	13	20.87	0-2	2
	713.5	23155	5	16-QAM	25	0	20.75	0-2	2

© 2014 PCTEST Engineering Laboratory, Inc.

8.2.2 LTE Band 12 Reduced Power

Table 8-5
LTE Band 12 Conducted Powers - 10 MHz Bandwidth

	Frequency [MHz]	Channel	Bandwidth [MHz]	Modulation	RB Size	RB Offset	Conducted Power [dBm]	MPR Allowed per 3GPP [dB]	MPR [dB]
Mid	707.5	23095	10	QPSK	1	0	16.95	0	0
	707.5	23095	10	QPSK	1	25	**17.16**	0	0
	707.5	23095	10	QPSK	1	49	17.14	0	0
	707.5	23095	10	QPSK	25	0	16.96	0-1	0
	707.5	23095	10	QPSK	25	12	**17.12**	0-1	0
	707.5	23095	10	QPSK	25	25	17.10	0-1	0
	707.5	23095	10	QPSK	50	0	16.98	0-1	0
	707.5	23095	10	16QAM	1	0	16.93	0-1	0
	707.5	23095	10	16QAM	1	25	17.13	0-1	0
	707.5	23095	10	16QAM	1	49	17.12	0-1	0
	707.5	23095	10	16QAM	25	0	16.89	0-2	0
	707.5	23095	10	16QAM	25	12	17.03	0-2	0
	707.5	23095	10	16QAM	25	25	16.98	0-2	0
	707.5	23095	10	16QAM	50	0	16.89	0-2	0

Note: LTE Band 12 at 10 MHz bandwidth does not support three non-overlapping channels. Per KDB Publication 941225 D05v02, when a device supports overlapping channel assignment in a channel bandwidth configuration, the middle channel of the group of overlapping channels should be selected for testing.

Table 8-6
LTE Band 12 Conducted Powers - 5 MHz Bandwidth

	Frequency [MHz]	Channel	Bandwidth [MHz]	Modulation	RB Size	RB Offset	Conducted Power [dBm]	MPR Allowed per 3GPP [dB]	MPR [dB]
Low	701.5	23035	5	QPSK	1	0	17.01	0	0
	701.5	23035	5	QPSK	1	12	16.86	0	0
	701.5	23035	5	QPSK	1	24	16.98	0	0
	701.5	23035	5	QPSK	12	0	16.99	0-1	0
	701.5	23035	5	QPSK	12	6	16.94	0-1	0
	701.5	23035	5	QPSK	12	13	17.14	0-1	0
	701.5	23035	5	QPSK	25	0	17.00	0-1	0
	701.5	23035	5	16-QAM	1	0	17.05	0-1	0
	701.5	23035	5	16-QAM	1	12	17.01	0-1	0
	701.5	23035	5	16-QAM	1	24	16.96	0-1	0
	701.5	23035	5	16-QAM	12	0	16.90	0-2	0
	701.5	23035	5	16-QAM	12	6	16.99	0-2	0
	701.5	23035	5	16-QAM	12	13	17.02	0-2	0
	701.5	23035	5	16-QAM	25	0	17.06	0-2	0
Mid	707.5	23095	5	QPSK	1	0	16.95	0	0
	707.5	23095	5	QPSK	1	12	17.03	0	0
	707.5	23095	5	QPSK	1	24	17.11	0	0
	707.5	23095	5	QPSK	12	0	17.00	0-1	0
	707.5	23095	5	QPSK	12	6	17.04	0-1	0
	707.5	23095	5	QPSK	12	13	17.01	0-1	0
	707.5	23095	5	QPSK	25	0	16.85	0-1	0
	707.5	23095	5	16-QAM	1	0	16.95	0-1	0
	707.5	23095	5	16-QAM	1	12	16.99	0-1	0
	707.5	23095	5	16-QAM	1	24	16.98	0-1	0
	707.5	23095	5	16-QAM	12	0	17.03	0-2	0
	707.5	23095	5	16-QAM	12	6	16.89	0-2	0
	707.5	23095	5	16-QAM	12	13	16.92	0-2	0
	707.5	23095	5	16-QAM	25	0	16.99	0-2	0
High	713.5	23155	5	QPSK	1	0	16.92	0	0
	713.5	23155	5	QPSK	1	12	17.04	0	0
	713.5	23155	5	QPSK	1	24	17.09	0	0
	713.5	23155	5	QPSK	12	0	17.14	0-1	0
	713.5	23155	5	QPSK	12	6	17.11	0-1	0
	713.5	23155	5	QPSK	12	13	16.90	0-1	0
	713.5	23155	5	QPSK	25	0	16.97	0-1	0
	713.5	23155	5	16-QAM	1	0	17.00	0-1	0
	713.5	23155	5	16-QAM	1	12	17.00	0-1	0
	713.5	23155	5	16-QAM	1	24	17.02	0-1	0
	713.5	23155	5	16-QAM	12	0	16.92	0-2	0
	713.5	23155	5	16-QAM	12	6	16.88	0-2	0
	713.5	23155	5	16-QAM	12	13	16.84	0-2	0
	713.5	23155	5	16-QAM	25	0	16.85	0-2	0

© 2014 PCTEST Engineering Laboratory, Inc.

8.2.3 LTE Band 5 Maximum Power

Table 8-7
LTE Band 5 Conducted Powers - 10 MHz Bandwidth

	Frequency [MHz]	Channel	Bandwidth [MHz]	Modulation	RB Size	RB Offset	Conducted Power [dBm]	MPR Allowed per 3GPP [dB]	MPR [dB]
Mid	836.5	20525	10	QPSK	1	0	23.10	0	0
	836.5	20525	10	QPSK	1	25	**23.13**	0	0
	836.5	20525	10	QPSK	1	49	23.09	0	0
	836.5	20525	10	QPSK	25	0	21.99	0-1	1
	836.5	20525	10	QPSK	25	12	**22.06**	0-1	1
	836.5	20525	10	QPSK	25	25	21.98	0-1	1
	836.5	20525	10	QPSK	50	0	21.86	0-1	1
	836.5	20525	10	16QAM	1	0	21.89	0-1	1
	836.5	20525	10	16QAM	1	25	22.16	0-1	1
	836.5	20525	10	16QAM	1	49	21.98	0-1	1
	836.5	20525	10	16QAM	25	0	21.00	0-2	2
	836.5	20525	10	16QAM	25	12	20.95	0-2	2
	836.5	20525	10	16QAM	25	25	20.91	0-2	2
	836.5	20525	10	16QAM	50	0	20.88	0-2	2

Note: LTE Band 5 at 10 MHz bandwidth does not support three non-overlapping channels. Per KDB Publication 941225 D05v02, when a device supports overlapping channel assignment in a channel bandwidth configuration, the middle channel of the group of overlapping channels should be selected for testing.

Table 8-8
LTE Band 5 Conducted Powers - 5 MHz Bandwidth

	Frequency [MHz]	Channel	Bandwidth [MHz]	Modulation	RB Size	RB Offset	Conducted Power [dBm]	MPR Allowed per 3GPP [dB]	MPR [dB]
Low	826.5	20425	5	QPSK	1	0	23.21	0	0
	826.5	20425	5	QPSK	1	12	23.14	0	0
	826.5	20425	5	QPSK	1	24	23.12	0	0
	826.5	20425	5	QPSK	12	0	22.17	0-1	1
	826.5	20425	5	QPSK	12	6	22.19	0-1	1
	826.5	20425	5	QPSK	12	13	22.13	0-1	1
	826.5	20425	5	QPSK	25	0	22.11	0-1	1
	826.5	20425	5	16-QAM	1	0	22.15	0-1	1
	826.5	20425	5	16-QAM	1	12	22.10	0-1	1
	826.5	20425	5	16-QAM	1	24	22.05	0-1	1
	826.5	20425	5	16-QAM	12	0	21.10	0-2	2
	826.5	20425	5	16-QAM	12	6	21.18	0-2	2
	826.5	20425	5	16-QAM	12	13	21.16	0-2	2
	826.5	20425	5	16-QAM	25	0	21.05	0-2	2
Mid	836.5	20525	5	QPSK	1	0	23.04	0	0
	836.5	20525	5	QPSK	1	12	23.19	0	0
	836.5	20525	5	QPSK	1	24	23.06	0	0
	836.5	20525	5	QPSK	12	0	22.22	0-1	1
	836.5	20525	5	QPSK	12	6	22.14	0-1	1
	836.5	20525	5	QPSK	12	13	22.12	0-1	1
	836.5	20525	5	QPSK	25	0	22.11	0-1	1
	836.5	20525	5	16-QAM	1	0	21.96	0-1	1
	836.5	20525	5	16-QAM	1	12	22.11	0-1	1
	836.5	20525	5	16-QAM	1	24	22.05	0-1	1
	836.5	20525	5	16-QAM	12	0	21.16	0-2	2
	836.5	20525	5	16-QAM	12	6	21.12	0-2	2
	836.5	20525	5	16-QAM	12	13	21.13	0-2	2
	836.5	20525	5	16-QAM	25	0	20.98	0-2	2
High	846.5	20625	5	QPSK	1	0	23.11	0	0
	846.5	20625	5	QPSK	1	12	23.21	0	0
	846.5	20625	5	QPSK	1	24	23.15	0	0
	846.5	20625	5	QPSK	12	0	22.12	0-1	1
	846.5	20625	5	QPSK	12	6	22.18	0-1	1
	846.5	20625	5	QPSK	12	13	22.15	0-1	1
	846.5	20625	5	QPSK	25	0	22.11	0-1	1
	846.5	20625	5	16-QAM	1	0	21.96	0-1	1
	846.5	20625	5	16-QAM	1	12	22.12	0-1	1
	846.5	20625	5	16-QAM	1	24	21.97	0-1	1
	846.5	20625	5	16-QAM	12	0	21.14	0-2	2
	846.5	20625	5	16-QAM	12	6	21.15	0-2	2
	846.5	20625	5	16-QAM	12	13	21.19	0-2	2
	846.5	20625	5	16-QAM	25	0	21.04	0-2	2

© 2014 PCTEST Engineering Laboratory, Inc.

8.2.4 LTE Band 5 Reduced Power

Table 8-9
LTE Band 5 Conducted Powers - 10 MHz Bandwidth

	Frequency [MHz]	Channel	Bandwidth [MHz]	Modulation	RB Size	RB Offset	Conducted Power [dBm]	MPR Allowed per 3GPP [dB]	MPR [dB]
Mid	836.5	20525	10	QPSK	1	0	16.33	0	0
	836.5	20525	10	QPSK	1	25	16.36	0	0
	836.5	20525	10	QPSK	1	49	**16.37**	0	0
	836.5	20525	10	QPSK	25	0	16.21	0-1	0
	836.5	20525	10	QPSK	25	12	16.25	0-1	0
	836.5	20525	10	QPSK	25	25	**16.27**	0-1	0
	836.5	20525	10	QPSK	50	0	16.26	0-1	0
	836.5	20525	10	16QAM	1	0	16.29	0-1	0
	836.5	20525	10	16QAM	1	25	16.37	0-1	0
	836.5	20525	10	16QAM	1	49	16.32	0-1	0
	836.5	20525	10	16QAM	25	0	16.23	0-2	0
	836.5	20525	10	16QAM	25	12	16.25	0-2	0
	836.5	20525	10	16QAM	25	25	16.26	0-2	0
	836.5	20525	10	16QAM	50	0	16.24	0-2	0

Note: LTE Band 5 at 10 MHz bandwidth does not support three non-overlapping channels. Per KDB Publication 941225 D05v02, when a device supports overlapping channel assignment in a channel bandwidth configuration, the middle channel of the group of overlapping channels should be selected for testing.

Table 8-10
LTE Band 5 Conducted Powers - 5 MHz Bandwidth

	Frequency [MHz]	Channel	Bandwidth [MHz]	Modulation	RB Size	RB Offset	Conducted Power [dBm]	MPR Allowed per 3GPP [dB]	MPR [dB]
Low	826.5	20425	5	QPSK	1	0	16.22	0	0
	826.5	20425	5	QPSK	1	12	16.31	0	0
	826.5	20425	5	QPSK	1	24	16.25	0	0
	826.5	20425	5	QPSK	12	0	16.18	0-1	0
	826.5	20425	5	QPSK	12	6	16.23	0-1	0
	826.5	20425	5	QPSK	12	13	16.38	0-1	0
	826.5	20425	5	QPSK	25	0	16.22	0-1	0
	826.5	20425	5	16-QAM	1	0	16.28	0-1	0
	826.5	20425	5	16-QAM	1	12	16.26	0-1	0
	826.5	20425	5	16-QAM	1	24	16.28	0-1	0
	826.5	20425	5	16-QAM	12	0	16.27	0-2	0
	826.5	20425	5	16-QAM	12	6	16.27	0-2	0
	826.5	20425	5	16-QAM	12	13	16.21	0-2	0
	826.5	20425	5	16-QAM	25	0	16.29	0-2	0
Mid	836.5	20525	5	QPSK	1	0	16.30	0	0
	836.5	20525	5	QPSK	1	12	16.28	0	0
	836.5	20525	5	QPSK	1	24	16.25	0	0
	836.5	20525	5	QPSK	12	0	16.26	0-1	0
	836.5	20525	5	QPSK	12	6	16.22	0-1	0
	836.5	20525	5	QPSK	12	13	16.24	0-1	0
	836.5	20525	5	QPSK	25	0	16.33	0-1	0
	836.5	20525	5	16-QAM	1	0	16.38	0-1	0
	836.5	20525	5	16-QAM	1	12	16.32	0-1	0
	836.5	20525	5	16-QAM	1	24	16.36	0-1	0
	836.5	20525	5	16-QAM	12	0	16.37	0-2	0
	836.5	20525	5	16-QAM	12	6	16.33	0-2	0
	836.5	20525	5	16-QAM	12	13	16.27	0-2	0
	836.5	20525	5	16-QAM	25	0	16.29	0-2	0
High	846.5	20625	5	QPSK	1	0	16.37	0	0
	846.5	20625	5	QPSK	1	12	16.28	0	0
	846.5	20625	5	QPSK	1	24	16.22	0	0
	846.5	20625	5	QPSK	12	0	16.28	0-1	0
	846.5	20625	5	QPSK	12	6	16.27	0-1	0
	846.5	20625	5	QPSK	12	13	16.32	0-1	0
	846.5	20625	5	QPSK	25	0	16.33	0-1	0
	846.5	20625	5	16-QAM	1	0	16.27	0-1	0
	846.5	20625	5	16-QAM	1	12	16.27	0-1	0
	846.5	20625	5	16-QAM	1	24	16.30	0-1	0
	846.5	20625	5	16-QAM	12	0	16.28	0-2	0
	846.5	20625	5	16-QAM	12	6	16.22	0-2	0
	846.5	20625	5	16-QAM	12	13	16.19	0-2	0
	846.5	20625	5	16-QAM	25	0	16.27	0-2	0

© 2014 PCTEST Engineering Laboratory, Inc.

8.2.5 LTE Band 4 Maximum Power

Table 8-11
LTE Band 4 Conducted Powers - 20 MHz Bandwidth

	Frequency [MHz]	Channel	Bandwidth [MHz]	Modulation	RB Size	RB Offset	Conducted Power [dBm]	MPR Allowed per 3GPP [dB]	MPR [dB]
Mid	1732.5	20175	20	QPSK	1	0	22.85	0	0
	1732.5	20175	20	QPSK	1	50	22.80	0	0
	1732.5	20175	20	QPSK	1	99	**22.87**	0	0
	1732.5	20175	20	QPSK	50	0	**21.58**	0-1	1
	1732.5	20175	20	QPSK	50	25	21.57	0-1	1
	1732.5	20175	20	QPSK	50	50	21.53	0-1	1
	1732.5	20175	20	QPSK	100	0	21.52	0-1	1
	1732.5	20175	20	16QAM	1	0	21.85	0-1	1
	1732.5	20175	20	16QAM	1	50	21.78	0-1	1
	1732.5	20175	20	16QAM	1	99	21.69	0-1	1
	1732.5	20175	20	16QAM	50	0	20.51	0-2	2
	1732.5	20175	20	16QAM	50	25	20.53	0-2	2
	1732.5	20175	20	16QAM	50	50	20.52	0-2	2
	1732.5	20175	20	16QAM	100	0	20.50	0-2	2

Note: LTE Band 4 at 20 MHz bandwidth does not support three non-overlapping channels. Per KDB Publication 941225 D05v02, when a device supports overlapping channel assignment in a channel bandwidth configuration, the middle channel of the group of overlapping channels should be selected for testing.

Table 8-12
LTE Band 4 Conducted Powers - 15 MHz Bandwidth

	Frequency [MHz]	Channel	Bandwidth [MHz]	Modulation	RB Size	RB Offset	Conducted Power [dBm]	MPR Allowed per 3GPP [dB]	MPR [dB]
Low	1717.5	20025	15	QPSK	1	0	22.75	0	0
	1717.5	20025	15	QPSK	1	36	22.69	0	0
	1717.5	20025	15	QPSK	1	74	22.76	0	0
	1717.5	20025	15	QPSK	36	0	21.53	0-1	1
	1717.5	20025	15	QPSK	36	18	21.78	0-1	1
	1717.5	20025	15	QPSK	36	37	21.65	0-1	1
	1717.5	20025	15	QPSK	75	0	21.63	0-1	1
	1717.5	20025	15	16QAM	1	0	21.76	0-1	1
	1717.5	20025	15	16QAM	1	36	21.80	0-1	1
	1717.5	20025	15	16QAM	1	74	21.84	0-1	1
	1717.5	20025	15	16QAM	36	0	20.92	0-2	2
	1717.5	20025	15	16QAM	36	18	20.84	0-2	2
	1717.5	20025	15	16QAM	36	37	20.76	0-2	2
	1717.5	20025	15	16QAM	75	0	20.59	0-2	2
Mid	1732.5	20175	15	QPSK	1	0	22.95	0	0
	1732.5	20175	15	QPSK	1	36	22.61	0	0
	1732.5	20175	15	QPSK	1	74	22.78	0	0
	1732.5	20175	15	QPSK	36	0	21.78	0-1	1
	1732.5	20175	15	QPSK	36	18	21.72	0-1	1
	1732.5	20175	15	QPSK	36	37	21.59	0-1	1
	1732.5	20175	15	QPSK	75	0	21.51	0-1	1
	1732.5	20175	15	16QAM	1	0	21.62	0-1	1
	1732.5	20175	15	16QAM	1	36	21.54	0-1	1
	1732.5	20175	15	16QAM	1	74	21.61	0-1	1
	1732.5	20175	15	16QAM	36	0	20.90	0-2	2
	1732.5	20175	15	16QAM	36	18	20.93	0-2	2
	1732.5	20175	15	16QAM	36	37	20.64	0-2	2
	1732.5	20175	15	16QAM	75	0	20.69	0-2	2
High	1747.5	20325	15	QPSK	1	0	22.57	0	0
	1747.5	20325	15	QPSK	1	36	22.66	0	0
	1747.5	20325	15	QPSK	1	74	22.82	0	0
	1747.5	20325	15	QPSK	36	0	21.74	0-1	1
	1747.5	20325	15	QPSK	36	18	21.72	0-1	1
	1747.5	20325	15	QPSK	36	37	21.69	0-1	1
	1747.5	20325	15	QPSK	75	0	21.87	0-1	1
	1747.5	20325	15	16QAM	1	0	21.65	0-1	1
	1747.5	20325	15	16QAM	1	36	21.77	0-1	1
	1747.5	20325	15	16QAM	1	74	21.63	0-1	1
	1747.5	20325	15	16QAM	36	0	20.93	0-2	2
	1747.5	20325	15	16QAM	36	18	20.66	0-2	2
	1747.5	20325	15	16QAM	36	37	20.75	0-2	2
	1747.5	20325	15	16QAM	75	0	20.94	0-2	2

© 2014 PCTEST Engineering Laboratory, Inc.

Table 8-13
LTE Band 4 Conducted Powers - 10 MHz Bandwidth

	Frequency [MHz]	Channel	Bandwidth [MHz]	Modulation	RB Size	RB Offset	Conducted Power [dBm]	MPR Allowed per 3GPP [dB]	MPR [dB]
Low	1715	20000	10	QPSK	1	0	22.94	0	0
	1715	20000	10	QPSK	1	25	22.68	0	0
	1715	20000	10	QPSK	1	49	22.73	0	0
	1715	20000	10	QPSK	25	0	21.74	0-1	1
	1715	20000	10	QPSK	25	12	21.76	0-1	1
	1715	20000	10	QPSK	25	25	21.80	0-1	1
	1715	20000	10	QPSK	50	0	21.57	0-1	1
	1715	20000	10	16QAM	1	0	21.61	0-1	1
	1715	20000	10	16QAM	1	25	21.70	0-1	1
	1715	20000	10	16QAM	1	49	21.98	0-1	1
	1715	20000	10	16QAM	25	0	20.57	0-2	2
	1715	20000	10	16QAM	25	12	20.83	0-2	2
	1715	20000	10	16QAM	25	25	20.85	0-2	2
	1715	20000	10	16QAM	50	0	20.86	0-2	2
Mid	1732.5	20175	10	QPSK	1	0	22.69	0	0
	1732.5	20175	10	QPSK	1	25	22.71	0	0
	1732.5	20175	10	QPSK	1	49	22.53	0	0
	1732.5	20175	10	QPSK	25	0	21.73	0-1	1
	1732.5	20175	10	QPSK	25	12	21.79	0-1	1
	1732.5	20175	10	QPSK	25	25	21.80	0-1	1
	1732.5	20175	10	QPSK	50	0	21.91	0-1	1
	1732.5	20175	10	16QAM	1	0	21.60	0-1	1
	1732.5	20175	10	16QAM	1	25	21.99	0-1	1
	1732.5	20175	10	16QAM	1	49	21.99	0-1	1
	1732.5	20175	10	16QAM	25	0	20.68	0-2	2
	1732.5	20175	10	16QAM	25	12	20.68	0-2	2
	1732.5	20175	10	16QAM	25	25	20.58	0-2	2
	1732.5	20175	10	16QAM	50	0	20.53	0-2	2
High	1750	20350	10	QPSK	1	0	22.83	0	0
	1750	20350	10	QPSK	1	25	22.65	0	0
	1750	20350	10	QPSK	1	49	22.51	0	0
	1750	20350	10	QPSK	25	0	21.76	0-1	1
	1750	20350	10	QPSK	25	12	21.75	0-1	1
	1750	20350	10	QPSK	25	25	21.53	0-1	1
	1750	20350	10	QPSK	50	0	21.64	0-1	1
	1750	20350	10	16QAM	1	0	21.94	0-1	1
	1750	20350	10	16QAM	1	25	21.57	0-1	1
	1750	20350	10	16QAM	1	49	21.95	0-1	1
	1750	20350	10	16QAM	25	0	20.97	0-2	2
	1750	20350	10	16QAM	25	12	20.54	0-2	2
	1750	20350	10	16QAM	25	25	20.89	0-2	2
	1750	20350	10	16QAM	50	0	20.69	0-2	2

Table 8-14
LTE Band 4 Conducted Powers - 5 MHz Bandwidth

	Frequency [MHz]	Channel	Bandwidth [MHz]	Modulation	RB Size	RB Offset	Conducted Power [dBm]	MPR Allowed per 3GPP [dB]	MPR [dB]
Low	1712.5	19975	5	QPSK	1	0	22.54	0	0
	1712.5	19975	5	QPSK	1	12	22.55	0	0
	1712.5	19975	5	QPSK	1	24	22.69	0	0
	1712.5	19975	5	QPSK	12	0	21.78	0-1	1
	1712.5	19975	5	QPSK	12	6	21.76	0-1	1
	1712.5	19975	5	QPSK	12	13	21.62	0-1	1
	1712.5	19975	5	QPSK	25	0	21.52	0-1	1
	1712.5	19975	5	16-QAM	1	0	21.65	0-1	1
	1712.5	19975	5	16-QAM	1	12	21.52	0-1	1
	1712.5	19975	5	16-QAM	1	24	21.83	0-1	1
	1712.5	19975	5	16-QAM	12	0	20.58	0-2	2
	1712.5	19975	5	16-QAM	12	6	20.91	0-2	2
	1712.5	19975	5	16-QAM	12	13	20.72	0-2	2
	1712.5	19975	5	16-QAM	25	0	20.80	0-2	2
Mid	1732.5	20175	5	QPSK	1	0	22.62	0	0
	1732.5	20175	5	QPSK	1	12	22.91	0	0
	1732.5	20175	5	QPSK	1	24	22.95	0	0
	1732.5	20175	5	QPSK	12	0	21.50	0-1	1
	1732.5	20175	5	QPSK	12	6	21.64	0-1	1
	1732.5	20175	5	QPSK	12	13	21.77	0-1	1
	1732.5	20175	5	QPSK	25	0	21.82	0-1	1
	1732.5	20175	5	16-QAM	1	0	21.65	0-1	1
	1732.5	20175	5	16-QAM	1	12	21.76	0-1	1
	1732.5	20175	5	16-QAM	1	24	21.62	0-1	1
	1732.5	20175	5	16-QAM	12	0	20.90	0-2	2
	1732.5	20175	5	16-QAM	12	6	20.86	0-2	2
	1732.5	20175	5	16-QAM	12	13	20.98	0-2	2
	1732.5	20175	5	16-QAM	25	0	20.69	0-2	2
High	1752.5	20375	5	QPSK	1	0	22.60	0	0
	1752.5	20375	5	QPSK	1	12	22.60	0	0
	1752.5	20375	5	QPSK	1	24	22.86	0	0
	1752.5	20375	5	QPSK	12	0	21.76	0-1	1
	1752.5	20375	5	QPSK	12	6	21.72	0-1	1
	1752.5	20375	5	QPSK	12	13	21.77	0-1	1
	1752.5	20375	5	QPSK	25	0	21.78	0-1	1
	1752.5	20375	5	16-QAM	1	0	21.54	0-1	1
	1752.5	20375	5	16-QAM	1	12	21.72	0-1	1
	1752.5	20375	5	16-QAM	1	24	21.97	0-1	1
	1752.5	20375	5	16-QAM	12	0	20.71	0-2	2
	1752.5	20375	5	16-QAM	12	6	20.74	0-2	2
	1752.5	20375	5	16-QAM	12	13	20.97	0-2	2
	1752.5	20375	5	16-QAM	25	0	20.91	0-2	2

© 2014 PCTEST Engineering Laboratory, Inc.

8.2.6 LTE Band 4 Reduced Power

Table 8-15
LTE Band 4 Conducted Powers - 20 MHz Bandwidth

	Frequency [MHz]	Channel	Bandwidth [MHz]	Modulation	RB Size	RB Offset	Conducted Power [dBm]	MPR Allowed per 3GPP [dB]	MPR [dB]
Mid	1732.5	20175	20	QPSK	1	0	12.16	0	0
	1732.5	20175	20	QPSK	1	50	**12.19**	0	0
	1732.5	20175	20	QPSK	1	99	12.03	0	0
	1732.5	20175	20	QPSK	50	0	12.07	0-1	0
	1732.5	20175	20	QPSK	50	25	**12.13**	0-1	0
	1732.5	20175	20	QPSK	50	50	12.09	0-1	0
	1732.5	20175	20	QPSK	100	0	12.08	0-1	0
	1732.5	20175	20	16QAM	1	0	12.25	0-1	0
	1732.5	20175	20	16QAM	1	50	12.15	0-1	0
	1732.5	20175	20	16QAM	1	99	12.08	0-1	0
	1732.5	20175	20	16QAM	50	0	12.07	0-2	0
	1732.5	20175	20	16QAM	50	25	12.09	0-2	0
	1732.5	20175	20	16QAM	50	50	11.99	0-2	0
	1732.5	20175	20	16QAM	100	0	12.12	0-2	0

Note: LTE Band 4 at 20 MHz bandwidth does not support three non-overlapping channels. Per KDB Publication 941225 D05v02, when a device supports overlapping channel assignment in a channel bandwidth configuration, the middle channel of the group of overlapping channels should be selected for testing.

Table 8-16
LTE Band 4 Conducted Powers - 15 MHz Bandwidth

	Frequency [MHz]	Channel	Bandwidth [MHz]	Modulation	RB Size	RB Offset	Conducted Power [dBm]	MPR Allowed per 3GPP [dB]	MPR [dB]
Low	1717.5	20025	15	QPSK	1	0	12.17	0	0
	1717.5	20025	15	QPSK	1	36	12.18	0	0
	1717.5	20025	15	QPSK	1	74	12.04	0	0
	1717.5	20025	15	QPSK	36	0	12.15	0-1	0
	1717.5	20025	15	QPSK	36	18	12.17	0-1	0
	1717.5	20025	15	QPSK	36	37	12.04	0-1	0
	1717.5	20025	15	QPSK	75	0	12.07	0-1	0
	1717.5	20025	15	16QAM	1	0	12.06	0-1	0
	1717.5	20025	15	16QAM	1	36	12.05	0-1	0
	1717.5	20025	15	16QAM	1	74	12.16	0-1	0
	1717.5	20025	15	16QAM	36	0	12.18	0-2	0
	1717.5	20025	15	16QAM	36	18	12.01	0-2	0
	1717.5	20025	15	16QAM	36	37	12.00	0-2	0
	1717.5	20025	15	16QAM	75	0	12.03	0-2	0
Mid	1732.5	20175	15	QPSK	1	0	12.05	0	0
	1732.5	20175	15	QPSK	1	36	11.95	0	0
	1732.5	20175	15	QPSK	1	74	11.99	0	0
	1732.5	20175	15	QPSK	36	0	12.04	0-1	0
	1732.5	20175	15	QPSK	36	18	12.13	0-1	0
	1732.5	20175	15	QPSK	36	37	12.01	0-1	0
	1732.5	20175	15	QPSK	75	0	12.04	0-1	0
	1732.5	20175	15	16QAM	1	0	12.23	0-1	0
	1732.5	20175	15	16QAM	1	36	12.20	0-1	0
	1732.5	20175	15	16QAM	1	74	12.19	0-1	0
	1732.5	20175	15	16QAM	36	0	12.04	0-2	0
	1732.5	20175	15	16QAM	36	18	11.97	0-2	0
	1732.5	20175	15	16QAM	36	37	11.98	0-2	0
	1732.5	20175	15	16QAM	75	0	12.00	0-2	0
High	1747.5	20325	15	QPSK	1	0	12.15	0	0
	1747.5	20325	15	QPSK	1	36	12.13	0	0
	1747.5	20325	15	QPSK	1	74	12.10	0	0
	1747.5	20325	15	QPSK	36	0	12.15	0-1	0
	1747.5	20325	15	QPSK	36	18	12.05	0-1	0
	1747.5	20325	15	QPSK	36	37	12.06	0-1	0
	1747.5	20325	15	QPSK	75	0	12.11	0-1	0
	1747.5	20325	15	16QAM	1	0	12.04	0-1	0
	1747.5	20325	15	16QAM	1	36	12.14	0-1	0
	1747.5	20325	15	16QAM	1	74	12.04	0-1	0
	1747.5	20325	15	16QAM	36	0	12.09	0-2	0
	1747.5	20325	15	16QAM	36	18	12.11	0-2	0
	1747.5	20325	15	16QAM	36	37	12.12	0-2	0
	1747.5	20325	15	16QAM	75	0	12.12	0-2	0

© 2014 PCTEST Engineering Laboratory, Inc.

Table 8-17
LTE Band 4 Conducted Powers - 10 MHz Bandwidth

	Frequency [MHz]	Channel	Bandwidth [MHz]	Modulation	RB Size	RB Offset	Conducted Power [dBm]	MPR Allowed per 3GPP [dB]	MPR [dB]
Low	1715	20000	10	QPSK	1	0	12.07	0	0
	1715	20000	10	QPSK	1	25	12.04	0	0
	1715	20000	10	QPSK	1	49	11.93	0	0
	1715	20000	10	QPSK	25	0	12.01	0-1	0
	1715	20000	10	QPSK	25	12	11.97	0-1	0
	1715	20000	10	QPSK	25	25	12.00	0-1	0
	1715	20000	10	QPSK	50	0	12.01	0-1	0
	1715	20000	10	16QAM	1	0	12.15	0-1	0
	1715	20000	10	16QAM	1	25	12.13	0-1	0
	1715	20000	10	16QAM	1	49	12.06	0-1	0
	1715	20000	10	16QAM	25	0	12.05	0-2	0
	1715	20000	10	16QAM	25	12	12.11	0-2	0
	1715	20000	10	16QAM	25	25	12.04	0-2	0
	1715	20000	10	16QAM	50	0	12.13	0-2	0
Mid	1732.5	20175	10	QPSK	1	0	12.18	0	0
	1732.5	20175	10	QPSK	1	25	12.11	0	0
	1732.5	20175	10	QPSK	1	49	12.14	0	0
	1732.5	20175	10	QPSK	25	0	12.05	0-1	0
	1732.5	20175	10	QPSK	25	12	12.18	0-1	0
	1732.5	20175	10	QPSK	25	25	12.04	0-1	0
	1732.5	20175	10	QPSK	50	0	12.07	0-1	0
	1732.5	20175	10	16QAM	1	0	12.14	0-1	0
	1732.5	20175	10	16QAM	1	25	12.18	0-1	0
	1732.5	20175	10	16QAM	1	49	12.18	0-1	0
	1732.5	20175	10	16QAM	25	0	12.19	0-2	0
	1732.5	20175	10	16QAM	25	12	12.04	0-2	0
	1732.5	20175	10	16QAM	25	25	12.08	0-2	0
	1732.5	20175	10	16QAM	50	0	12.11	0-2	0
High	1750	20350	10	QPSK	1	0	12.14	0	0
	1750	20350	10	QPSK	1	25	12.04	0	0
	1750	20350	10	QPSK	1	49	12.15	0	0
	1750	20350	10	QPSK	25	0	12.19	0-1	0
	1750	20350	10	QPSK	25	12	12.23	0-1	0
	1750	20350	10	QPSK	25	25	12.04	0-1	0
	1750	20350	10	QPSK	50	0	12.15	0-1	0
	1750	20350	10	16QAM	1	0	12.13	0-1	0
	1750	20350	10	16QAM	1	25	12.16	0-1	0
	1750	20350	10	16QAM	1	49	12.22	0-1	0
	1750	20350	10	16QAM	25	0	12.05	0-2	0
	1750	20350	10	16QAM	25	12	12.03	0-2	0
	1750	20350	10	16QAM	25	25	12.03	0-2	0
	1750	20350	10	16QAM	50	0	12.03	0-2	0

Table 8-18
LTE Band 4 Conducted Powers - 5 MHz Bandwidth

	Frequency [MHz]	Channel	Bandwidth [MHz]	Modulation	RB Size	RB Offset	Conducted Power [dBm]	MPR Allowed per 3GPP [dB]	MPR [dB]
Low	1712.5	19975	5	QPSK	1	0	12.05	0	0
	1712.5	19975	5	QPSK	1	12	12.14	0	0
	1712.5	19975	5	QPSK	1	24	12.08	0	0
	1712.5	19975	5	QPSK	12	0	12.11	0-1	0
	1712.5	19975	5	QPSK	12	6	12.14	0-1	0
	1712.5	19975	5	QPSK	12	13	12.18	0-1	0
	1712.5	19975	5	QPSK	25	0	12.05	0-1	0
	1712.5	19975	5	16-QAM	1	0	12.04	0-1	0
	1712.5	19975	5	16-QAM	1	12	11.95	0-1	0
	1712.5	19975	5	16-QAM	1	24	12.04	0-1	0
	1712.5	19975	5	16-QAM	12	0	12.10	0-2	0
	1712.5	19975	5	16-QAM	12	6	12.05	0-2	0
	1712.5	19975	5	16-QAM	12	13	12.08	0-2	0
	1712.5	19975	5	16-QAM	25	0	12.06	0-2	0
Mid	1732.5	20175	5	QPSK	1	0	12.13	0	0
	1732.5	20175	5	QPSK	1	12	12.10	0	0
	1732.5	20175	5	QPSK	1	24	12.11	0	0
	1732.5	20175	5	QPSK	12	0	12.05	0-1	0
	1732.5	20175	5	QPSK	12	6	12.19	0-1	0
	1732.5	20175	5	QPSK	12	13	12.20	0-1	0
	1732.5	20175	5	QPSK	25	0	12.16	0-1	0
	1732.5	20175	5	16-QAM	1	0	12.20	0-1	0
	1732.5	20175	5	16-QAM	1	12	12.19	0-1	0
	1732.5	20175	5	16-QAM	1	24	12.17	0-1	0
	1732.5	20175	5	16-QAM	12	0	12.03	0-2	0
	1732.5	20175	5	16-QAM	12	6	12.01	0-2	0
	1732.5	20175	5	16-QAM	12	13	12.00	0-2	0
	1732.5	20175	5	16-QAM	25	0	11.95	0-2	0
High	1752.5	20375	5	QPSK	1	0	12.08	0	0
	1752.5	20375	5	QPSK	1	12	12.14	0	0
	1752.5	20375	5	QPSK	1	24	12.10	0	0
	1752.5	20375	5	QPSK	12	0	12.11	0-1	0
	1752.5	20375	5	QPSK	12	6	12.03	0-1	0
	1752.5	20375	5	QPSK	12	13	12.02	0-1	0
	1752.5	20375	5	QPSK	25	0	12.06	0-1	0
	1752.5	20375	5	16-QAM	1	0	12.21	0-1	0
	1752.5	20375	5	16-QAM	1	12	12.15	0-1	0
	1752.5	20375	5	16-QAM	1	24	12.19	0-1	0
	1752.5	20375	5	16-QAM	12	0	12.04	0-2	0
	1752.5	20375	5	16-QAM	12	6	12.06	0-2	0
	1752.5	20375	5	16-QAM	12	13	12.06	0-2	0
	1752.5	20375	5	16-QAM	25	0	12.08	0-2	0

© 2014 PCTEST Engineering Laboratory, Inc.

8.2.7 LTE Band 2 Maximum Power

Table 8-19
LTE Band 2 Conducted Powers - 20 MHz Bandwidth

	Frequency [MHz]	Channel	Bandwidth [MHz]	Modulation	RB Size	RB Offset	Conducted Power [dBm]	MPR Allowed per 3GPP [dB]	MPR [dB]
Low	1860	18700	20	QPSK	1	0	22.76	0	0
	1860	18700	20	QPSK	1	50	**23.05**	0	0
	1860	18700	20	QPSK	1	99	22.75	0	0
	1860	18700	20	QPSK	50	0	21.71	0-1	1
	1860	18700	20	QPSK	50	25	**21.74**	0-1	1
	1860	18700	20	QPSK	50	50	21.70	0-1	1
	1860	18700	20	QPSK	100	0	21.72	0-1	1
	1860	18700	20	16QAM	1	0	21.66	0-1	1
	1860	18700	20	16QAM	1	50	21.88	0-1	1
	1860	18700	20	16QAM	1	99	21.74	0-1	1
	1860	18700	20	16QAM	50	0	20.69	0-2	2
	1860	18700	20	16QAM	50	25	20.69	0-2	2
	1860	18700	20	16QAM	50	50	20.69	0-2	2
	1860	18700	20	16QAM	100	0	20.81	0-2	2
Mid	1880.0	18900	20	QPSK	1	0	22.74	0	0
	1880.0	18900	20	QPSK	1	50	22.78	0	0
	1880.0	18900	20	QPSK	1	99	22.97	0	0
	1880.0	18900	20	QPSK	50	0	21.60	0-1	1
	1880.0	18900	20	QPSK	50	25	21.58	0-1	1
	1880.0	18900	20	QPSK	50	50	21.51	0-1	1
	1880.0	18900	20	QPSK	100	0	21.56	0-1	1
	1880.0	18900	20	16QAM	1	0	21.73	0-1	1
	1880.0	18900	20	16QAM	1	50	21.66	0-1	1
	1880.0	18900	20	16QAM	1	99	21.86	0-1	1
	1880.0	18900	20	16QAM	50	0	20.62	0-2	2
	1880.0	18900	20	16QAM	50	25	20.65	0-2	2
	1880.0	18900	20	16QAM	50	50	20.64	0-2	2
	1880.0	18900	20	16QAM	100	0	20.64	0-2	2
High	1900	19100	20	QPSK	1	0	22.87	0	0
	1900	19100	20	QPSK	1	50	22.76	0	0
	1900	19100	20	QPSK	1	99	22.62	0	0
	1900	19100	20	QPSK	50	0	21.50	0-1	1
	1900	19100	20	QPSK	50	25	21.56	0-1	1
	1900	19100	20	QPSK	50	50	21.55	0-1	1
	1900	19100	20	QPSK	100	0	21.53	0-1	1
	1900	19100	20	16QAM	1	0	21.74	0-1	1
	1900	19100	20	16QAM	1	50	21.78	0-1	1
	1900	19100	20	16QAM	1	99	21.59	0-1	1
	1900	19100	20	16QAM	50	0	20.52	0-2	2
	1900	19100	20	16QAM	50	25	20.58	0-2	2
	1900	19100	20	16QAM	50	50	20.64	0-2	2
	1900	19100	20	16QAM	100	0	20.60	0-2	2

Table 8-20
LTE Band 2 Conducted Powers - 15 MHz Bandwidth

	Frequency [MHz]	Channel	Bandwidth [MHz]	Modulation	RB Size	RB Offset	Conducted Power [dBm]	MPR Allowed per 3GPP [dB]	MPR [dB]
Low	1857.5	18675	15	QPSK	1	0	22.87	0	0
	1857.5	18675	15	QPSK	1	36	22.65	0	0
	1857.5	18675	15	QPSK	1	74	22.55	0	0
	1857.5	18675	15	QPSK	36	0	21.69	0-1	1
	1857.5	18675	15	QPSK	36	18	21.60	0-1	1
	1857.5	18675	15	QPSK	36	37	21.61	0-1	1
	1857.5	18675	15	QPSK	75	0	21.89	0-1	1
	1857.5	18675	15	16QAM	1	0	21.99	0-1	1
	1857.5	18675	15	16QAM	1	36	21.79	0-1	1
	1857.5	18675	15	16QAM	1	74	21.60	0-1	1
	1857.5	18675	15	16QAM	36	0	20.84	0-2	2
	1857.5	18675	15	16QAM	36	18	20.55	0-2	2
	1857.5	18675	15	16QAM	36	37	20.66	0-2	2
	1857.5	18675	15	16QAM	75	0	20.50	0-2	2
Mid	1880.0	18900	15	QPSK	1	0	22.95	0	0
	1880.0	18900	15	QPSK	1	36	22.85	0	0
	1880.0	18900	15	QPSK	1	74	22.68	0	0
	1880.0	18900	15	QPSK	36	0	21.64	0-1	1
	1880.0	18900	15	QPSK	36	18	21.89	0-1	1
	1880.0	18900	15	QPSK	36	37	21.75	0-1	1
	1880.0	18900	15	QPSK	75	0	21.56	0-1	1
	1880.0	18900	15	16QAM	1	0	21.97	0-1	1
	1880.0	18900	15	16QAM	1	36	21.82	0-1	1
	1880.0	18900	15	16QAM	1	74	21.59	0-1	1
	1880.0	18900	15	16QAM	36	0	20.82	0-2	2
	1880.0	18900	15	16QAM	36	18	20.60	0-2	2
	1880.0	18900	15	16QAM	36	37	20.77	0-2	2
	1880.0	18900	15	16QAM	75	0	20.52	0-2	2
High	1902.5	19125	15	QPSK	1	0	22.89	0	0
	1902.5	19125	15	QPSK	1	36	22.86	0	0
	1902.5	19125	15	QPSK	1	74	22.66	0	0
	1902.5	19125	15	QPSK	36	0	21.69	0-1	1
	1902.5	19125	15	QPSK	36	18	21.69	0-1	1
	1902.5	19125	15	QPSK	36	37	21.81	0-1	1
	1902.5	19125	15	QPSK	75	0	21.80	0-1	1
	1902.5	19125	15	16QAM	1	0	21.66	0-1	1
	1902.5	19125	15	16QAM	1	36	21.78	0-1	1
	1902.5	19125	15	16QAM	1	74	21.58	0-1	1
	1902.5	19125	15	16QAM	36	0	20.85	0-2	2
	1902.5	19125	15	16QAM	36	18	20.77	0-2	2
	1902.5	19125	15	16QAM	36	37	20.83	0-2	2
	1902.5	19125	15	16QAM	75	0	20.80	0-2	2

© 2014 PCTEST Engineering Laboratory, Inc.

Table 8-21
LTE Band 2 Conducted Powers - 10 MHz Bandwidth

	Frequency [MHz]	Channel	Bandwidth [MHz]	Modulation	RB Size	RB Offset	Conducted Power [dBm]	MPR Allowed per 3GPP [dB]	MPR [dB]
Low	1855	18650	10	QPSK	1	0	22.57	0	0
	1855	18650	10	QPSK	1	25	22.65	0	0
	1855	18650	10	QPSK	1	49	22.52	0	0
	1855	18650	10	QPSK	25	0	21.71	0-1	1
	1855	18650	10	QPSK	25	12	21.84	0-1	1
	1855	18650	10	QPSK	25	25	21.60	0-1	1
	1855	18650	10	QPSK	50	0	21.88	0-1	1
	1855	18650	10	16QAM	1	0	21.88	0-1	1
	1855	18650	10	16QAM	1	25	21.69	0-1	1
	1855	18650	10	16QAM	1	49	21.84	0-1	1
	1855	18650	10	16QAM	25	0	20.81	0-2	2
	1855	18650	10	16QAM	25	12	20.86	0-2	2
	1855	18650	10	16QAM	25	25	20.63	0-2	2
	1855	18650	10	16QAM	50	0	20.99	0-2	2
Mid	1880.0	18900	10	QPSK	1	0	22.62	0	0
	1880.0	18900	10	QPSK	1	25	22.95	0	0
	1880.0	18900	10	QPSK	1	49	22.94	0	0
	1880.0	18900	10	QPSK	25	0	21.67	0-1	1
	1880.0	18900	10	QPSK	25	12	21.50	0-1	1
	1880.0	18900	10	QPSK	25	25	21.56	0-1	1
	1880.0	18900	10	QPSK	50	0	21.75	0-1	1
	1880.0	18900	10	16QAM	1	0	21.69	0-1	1
	1880.0	18900	10	16QAM	1	25	21.52	0-1	1
	1880.0	18900	10	16QAM	1	49	21.90	0-1	1
	1880.0	18900	10	16QAM	25	0	20.56	0-2	2
	1880.0	18900	10	16QAM	25	12	20.83	0-2	2
	1880.0	18900	10	16QAM	25	25	20.58	0-2	2
	1880.0	18900	10	16QAM	50	0	20.95	0-2	2
High	1905	19150	10	QPSK	1	0	22.98	0	0
	1905	19150	10	QPSK	1	25	22.63	0	0
	1905	19150	10	QPSK	1	49	22.61	0	0
	1905	19150	10	QPSK	25	0	21.76	0-1	1
	1905	19150	10	QPSK	25	12	21.99	0-1	1
	1905	19150	10	QPSK	25	25	21.83	0-1	1
	1905	19150	10	QPSK	50	0	21.82	0-1	1
	1905	19150	10	16QAM	1	0	21.96	0-1	1
	1905	19150	10	16QAM	1	25	21.87	0-1	1
	1905	19150	10	16QAM	1	49	21.81	0-1	1
	1905	19150	10	16QAM	25	0	20.70	0-2	2
	1905	19150	10	16QAM	25	12	20.68	0-2	2
	1905	19150	10	16QAM	25	25	20.69	0-2	2
	1905	19150	10	16QAM	50	0	20.69	0-2	2

Table 8-22
LTE Band 2 Conducted Powers - 5 MHz Bandwidth

	Frequency [MHz]	Channel	Bandwidth [MHz]	Modulation	RB Size	RB Offset	Conducted Power [dBm]	MPR Allowed per 3GPP [dB]	MPR [dB]
Low	1852.5	18625	5	QPSK	1	0	22.75	0	0
	1852.5	18625	5	QPSK	1	12	22.85	0	0
	1852.5	18625	5	QPSK	1	24	22.58	0	0
	1852.5	18625	5	QPSK	12	0	21.83	0-1	1
	1852.5	18625	5	QPSK	12	6	21.71	0-1	1
	1852.5	18625	5	QPSK	12	13	21.81	0-1	1
	1852.5	18625	5	QPSK	25	0	21.66	0-1	1
	1852.5	18625	5	16-QAM	1	0	21.89	0-1	1
	1852.5	18625	5	16-QAM	1	12	21.94	0-1	1
	1852.5	18625	5	16-QAM	1	24	21.75	0-1	1
	1852.5	18625	5	16-QAM	12	0	20.85	0-2	2
	1852.5	18625	5	16-QAM	12	6	20.68	0-2	2
	1852.5	18625	5	16-QAM	12	13	20.85	0-2	2
	1852.5	18625	5	16-QAM	25	0	20.69	0-2	2
Mid	1880.0	18900	5	QPSK	1	0	22.65	0	0
	1880.0	18900	5	QPSK	1	12	22.65	0	0
	1880.0	18900	5	QPSK	1	24	22.68	0	0
	1880.0	18900	5	QPSK	12	0	21.64	0-1	1
	1880.0	18900	5	QPSK	12	6	21.67	0-1	1
	1880.0	18900	5	QPSK	12	13	21.54	0-1	1
	1880.0	18900	5	QPSK	25	0	21.77	0-1	1
	1880.0	18900	5	16-QAM	1	0	21.60	0-1	1
	1880.0	18900	5	16-QAM	1	12	21.55	0-1	1
	1880.0	18900	5	16-QAM	1	24	21.78	0-1	1
	1880.0	18900	5	16-QAM	12	0	20.85	0-2	2
	1880.0	18900	5	16-QAM	12	6	20.86	0-2	2
	1880.0	18900	5	16-QAM	12	13	20.75	0-2	2
	1880.0	18900	5	16-QAM	25	0	20.85	0-2	2
High	1907.5	19175	5	QPSK	1	0	22.60	0	0
	1907.5	19175	5	QPSK	1	12	22.84	0	0
	1907.5	19175	5	QPSK	1	24	22.81	0	0
	1907.5	19175	5	QPSK	12	0	21.86	0-1	1
	1907.5	19175	5	QPSK	12	6	21.85	0-1	1
	1907.5	19175	5	QPSK	12	13	21.62	0-1	1
	1907.5	19175	5	QPSK	25	0	21.88	0-1	1
	1907.5	19175	5	16-QAM	1	0	21.85	0-1	1
	1907.5	19175	5	16-QAM	1	12	21.66	0-1	1
	1907.5	19175	5	16-QAM	1	24	21.81	0-1	1
	1907.5	19175	5	16-QAM	12	0	20.78	0-2	2
	1907.5	19175	5	16-QAM	12	6	20.51	0-2	2
	1907.5	19175	5	16-QAM	12	13	20.61	0-2	2
	1907.5	19175	5	16-QAM	25	0	20.72	0-2	2

© 2014 PCTEST Engineering Laboratory, Inc.

8.2.8 LTE Band 2 Reduced Power

Table 8-23
LTE Band 2 Conducted Powers - 20 MHz Bandwidth

	Frequency [MHz]	Channel	Bandwidth [MHz]	Modulation	RB Size	RB Offset	Conducted Power [dBm]	MPR Allowed per 3GPP [dB]	MPR [dB]
Low	1860	18700	20	QPSK	1	0	12.26	0	0
	1860	18700	20	QPSK	1	50	12.30	0	0
	1860	18700	20	QPSK	1	99	12.28	0	0
	1860	18700	20	QPSK	50	0	12.31	0-1	0
	1860	18700	20	QPSK	50	25	12.25	0-1	0
	1860	18700	20	QPSK	50	50	12.23	0-1	0
	1860	18700	20	QPSK	100	0	12.15	0-1	0
	1860	18700	20	16QAM	1	0	12.15	0-1	0
	1860	18700	20	16QAM	1	50	12.25	0-1	0
	1860	18700	20	16QAM	1	99	12.28	0-1	0
	1860	18700	20	16QAM	50	0	12.30	0-2	0
	1860	18700	20	16QAM	50	25	12.27	0-2	0
	1860	18700	20	16QAM	50	50	12.17	0-2	0
	1860	18700	20	16QAM	100	0	12.26	0-2	0
Mid	1880.0	18900	20	QPSK	1	0	12.20	0	0
	1880.0	18900	20	QPSK	1	50	12.29	0	0
	1880.0	18900	20	QPSK	1	99	12.13	0	0
	1880.0	18900	20	QPSK	50	0	12.23	0-1	0
	1880.0	18900	20	QPSK	50	25	12.16	0-1	0
	1880.0	18900	20	QPSK	50	50	12.09	0-1	0
	1880.0	18900	20	QPSK	100	0	12.18	0-1	0
	1880.0	18900	20	16QAM	1	0	12.22	0-1	0
	1880.0	18900	20	16QAM	1	50	12.18	0-1	0
	1880.0	18900	20	16QAM	1	99	12.02	0-1	0
	1880.0	18900	20	16QAM	50	0	12.14	0-2	0
	1880.0	18900	20	16QAM	50	25	12.17	0-2	0
	1880.0	18900	20	16QAM	50	50	12.08	0-2	0
	1880.0	18900	20	16QAM	100	0	12.13	0-2	0
High	1900	19100	20	QPSK	1	0	12.26	0	0
	1900	19100	20	QPSK	1	50	**12.43**	0	0
	1900	19100	20	QPSK	1	99	12.03	0	0
	1900	19100	20	QPSK	50	0	12.13	0-1	0
	1900	19100	20	QPSK	50	25	**12.39**	0-1	0
	1900	19100	20	QPSK	50	50	12.23	0-1	0
	1900	19100	20	QPSK	100	0	12.27	0-1	0
	1900	19100	20	16QAM	1	0	12.05	0-1	0
	1900	19100	20	16QAM	1	50	12.32	0-1	0
	1900	19100	20	16QAM	1	99	11.95	0-1	0
	1900	19100	20	16QAM	50	0	12.12	0-2	0
	1900	19100	20	16QAM	50	25	12.36	0-2	0
	1900	19100	20	16QAM	50	50	12.25	0-2	0
	1900	19100	20	16QAM	100	0	12.28	0-2	0

Table 8-24
LTE Band 2 Conducted Powers - 15 MHz Bandwidth

	Frequency [MHz]	Channel	Bandwidth [MHz]	Modulation	RB Size	RB Offset	Conducted Power [dBm]	MPR Allowed per 3GPP [dB]	MPR [dB]
Low	1857.5	18675	15	QPSK	1	0	12.20	0	0
	1857.5	18675	15	QPSK	1	36	12.06	0	0
	1857.5	18675	15	QPSK	1	74	12.16	0	0
	1857.5	18675	15	QPSK	36	0	12.15	0-1	0
	1857.5	18675	15	QPSK	36	18	12.19	0-1	0
	1857.5	18675	15	QPSK	36	37	12.11	0-1	0
	1857.5	18675	15	QPSK	75	0	12.17	0-1	0
	1857.5	18675	15	16QAM	1	0	12.04	0-1	0
	1857.5	18675	15	16QAM	1	36	12.01	0-1	0
	1857.5	18675	15	16QAM	1	74	12.14	0-1	0
	1857.5	18675	15	16QAM	36	0	12.22	0-2	0
	1857.5	18675	15	16QAM	36	18	12.29	0-2	0
	1857.5	18675	15	16QAM	36	37	12.20	0-2	0
	1857.5	18675	15	16QAM	75	0	12.13	0-2	0
Mid	1880.0	18900	15	QPSK	1	0	12.15	0	0
	1880.0	18900	15	QPSK	1	36	12.05	0	0
	1880.0	18900	15	QPSK	1	74	12.18	0	0
	1880.0	18900	15	QPSK	36	0	12.11	0-1	0
	1880.0	18900	15	QPSK	36	18	12.23	0-1	0
	1880.0	18900	15	QPSK	36	37	12.20	0-1	0
	1880.0	18900	15	QPSK	75	0	12.21	0-1	0
	1880.0	18900	15	16QAM	1	0	12.35	0-1	0
	1880.0	18900	15	16QAM	1	36	12.33	0-1	0
	1880.0	18900	15	16QAM	1	74	12.05	0-1	0
	1880.0	18900	15	16QAM	36	0	12.11	0-2	0
	1880.0	18900	15	16QAM	36	18	12.14	0-2	0
	1880.0	18900	15	16QAM	36	37	12.19	0-2	0
	1880.0	18900	15	16QAM	75	0	12.20	0-2	0
High	1902.5	19125	15	QPSK	1	0	12.19	0	0
	1902.5	19125	15	QPSK	1	36	12.04	0	0
	1902.5	19125	15	QPSK	1	74	12.04	0	0
	1902.5	19125	15	QPSK	36	0	12.14	0-1	0
	1902.5	19125	15	QPSK	36	18	12.13	0-1	0
	1902.5	19125	15	QPSK	36	37	12.00	0-1	0
	1902.5	19125	15	QPSK	75	0	11.99	0-1	0
	1902.5	19125	15	16QAM	1	0	12.34	0-1	0
	1902.5	19125	15	16QAM	1	36	12.30	0-1	0
	1902.5	19125	15	16QAM	1	74	12.33	0-1	0
	1902.5	19125	15	16QAM	36	0	12.05	0-2	0
	1902.5	19125	15	16QAM	36	18	12.15	0-2	0
	1902.5	19125	15	16QAM	36	37	12.18	0-2	0
	1902.5	19125	15	16QAM	75	0	12.14	0-2	0

© 2014 PCTEST Engineering Laboratory, Inc.

Table 8-25
LTE Band 2 Conducted Powers - 10 MHz Bandwidth

	Frequency [MHz]	Channel	Bandwidth [MHz]	Modulation	RB Size	RB Offset	Conducted Power [dBm]	MPR Allowed per 3GPP [dB]	MPR [dB]
Low	1855	18650	10	QPSK	1	0	12.24	0	0
	1855	18650	10	QPSK	1	25	12.21	0	0
	1855	18650	10	QPSK	1	49	12.15	0	0
	1855	18650	10	QPSK	25	0	12.04	0-1	0
	1855	18650	10	QPSK	25	12	12.08	0-1	0
	1855	18650	10	QPSK	25	25	12.17	0-1	0
	1855	18650	10	QPSK	50	0	12.19	0-1	0
	1855	18650	10	16QAM	1	0	12.05	0-1	0
	1855	18650	10	16QAM	1	25	12.12	0-1	0
	1855	18650	10	16QAM	1	49	12.28	0-1	0
	1855	18650	10	16QAM	25	0	12.33	0-2	0
	1855	18650	10	16QAM	25	12	12.07	0-2	0
	1855	18650	10	16QAM	25	25	12.19	0-2	0
	1855	18650	10	16QAM	50	0	12.14	0-2	0
Mid	1880.0	18900	10	QPSK	1	0	12.19	0	0
	1880.0	18900	10	QPSK	1	25	12.22	0	0
	1880.0	18900	10	QPSK	1	49	12.06	0	0
	1880.0	18900	10	QPSK	25	0	12.28	0-1	0
	1880.0	18900	10	QPSK	25	12	12.22	0-1	0
	1880.0	18900	10	QPSK	25	25	12.29	0-1	0
	1880.0	18900	10	QPSK	50	0	12.18	0-1	0
	1880.0	18900	10	16QAM	1	0	12.35	0-1	0
	1880.0	18900	10	16QAM	1	25	12.33	0-1	0
	1880.0	18900	10	16QAM	1	49	12.05	0-1	0
	1880.0	18900	10	16QAM	25	0	12.01	0-2	0
	1880.0	18900	10	16QAM	25	12	11.97	0-2	0
	1880.0	18900	10	16QAM	25	25	12.05	0-2	0
	1880.0	18900	10	16QAM	50	0	12.14	0-2	0
High	1905	19150	10	QPSK	1	0	12.18	0	0
	1905	19150	10	QPSK	1	25	12.11	0	0
	1905	19150	10	QPSK	1	49	12.05	0	0
	1905	19150	10	QPSK	25	0	12.07	0-1	0
	1905	19150	10	QPSK	25	12	12.14	0-1	0
	1905	19150	10	QPSK	25	25	12.17	0-1	0
	1905	19150	10	QPSK	50	0	12.06	0-1	0
	1905	19150	10	16QAM	1	0	12.35	0-1	0
	1905	19150	10	16QAM	1	25	12.16	0-1	0
	1905	19150	10	16QAM	1	49	12.17	0-1	0
	1905	19150	10	16QAM	25	0	12.05	0-2	0
	1905	19150	10	16QAM	25	12	12.20	0-2	0
	1905	19150	10	16QAM	25	25	12.22	0-2	0
	1905	19150	10	16QAM	50	0	12.21	0-2	0

Table 8-26
LTE Band 2 Conducted Powers - 5 MHz Bandwidth

	Frequency [MHz]	Channel	Bandwidth [MHz]	Modulation	RB Size	RB Offset	Conducted Power [dBm]	MPR Allowed per 3GPP [dB]	MPR [dB]
Low	1852.5	18625	5	QPSK	1	0	12.17	0	0
	1852.5	18625	5	QPSK	1	12	12.25	0	0
	1852.5	18625	5	QPSK	1	24	12.29	0	0
	1852.5	18625	5	QPSK	12	0	12.15	0-1	0
	1852.5	18625	5	QPSK	12	6	12.06	0-1	0
	1852.5	18625	5	QPSK	12	13	12.18	0-1	0
	1852.5	18625	5	QPSK	25	0	12.20	0-1	0
	1852.5	18625	5	16-QAM	1	0	12.38	0-1	0
	1852.5	18625	5	16-QAM	1	12	12.33	0-1	0
	1852.5	18625	5	16-QAM	1	24	12.19	0-1	0
	1852.5	18625	5	16-QAM	12	0	12.05	0-2	0
	1852.5	18625	5	16-QAM	12	6	12.08	0-2	0
	1852.5	18625	5	16-QAM	12	13	12.06	0-2	0
	1852.5	18625	5	16-QAM	25	0	12.10	0-2	0
Mid	1880.0	18900	5	QPSK	1	0	12.07	0	0
	1880.0	18900	5	QPSK	1	12	12.20	0	0
	1880.0	18900	5	QPSK	1	24	12.15	0	0
	1880.0	18900	5	QPSK	12	0	12.06	0-1	0
	1880.0	18900	5	QPSK	12	6	12.07	0-1	0
	1880.0	18900	5	QPSK	12	13	12.19	0-1	0
	1880.0	18900	5	QPSK	25	0	12.18	0-1	0
	1880.0	18900	5	16-QAM	1	0	12.35	0-1	0
	1880.0	18900	5	16-QAM	1	12	12.15	0-1	0
	1880.0	18900	5	16-QAM	1	24	12.28	0-1	0
	1880.0	18900	5	16-QAM	12	0	12.05	0-2	0
	1880.0	18900	5	16-QAM	12	6	12.18	0-2	0
	1880.0	18900	5	16-QAM	12	13	12.17	0-2	0
	1880.0	18900	5	16-QAM	25	0	12.10	0-2	0
High	1907.5	19175	5	QPSK	1	0	12.22	0	0
	1907.5	19175	5	QPSK	1	12	12.20	0	0
	1907.5	19175	5	QPSK	1	24	12.18	0	0
	1907.5	19175	5	QPSK	12	0	12.34	0-1	0
	1907.5	19175	5	QPSK	12	6	12.09	0-1	0
	1907.5	19175	5	QPSK	12	13	12.06	0-1	0
	1907.5	19175	5	QPSK	25	0	12.06	0-1	0
	1907.5	19175	5	16-QAM	1	0	12.30	0-1	0
	1907.5	19175	5	16-QAM	1	12	12.22	0-1	0
	1907.5	19175	5	16-QAM	1	24	12.28	0-1	0
	1907.5	19175	5	16-QAM	12	0	12.11	0-2	0
	1907.5	19175	5	16-QAM	12	6	12.15	0-2	0
	1907.5	19175	5	16-QAM	12	13	12.18	0-2	0
	1907.5	19175	5	16-QAM	25	0	12.14	0-2	0

© 2014 PCTEST Engineering Laboratory, Inc.

8.3 WLAN Conducted Powers

Table 8-27
Antenna 1 IEEE 802.11b Average RF Power

Mode	Freq	Channel	802.11b (2.4 GHz) Conducted Power [dBm]			
			Data Rate [Mbps]			
	[MHz]		1	2	5.5	11
802.11b	2412	1*	13.75	13.92	14.01	14.02
802.11b	2437	6*	13.60	13.80	13.78	13.81
802.11b	2462	11*	**13.80**	14.04	14.00	13.99

Table 8-28
Antenna 1 IEEE 802.11g Average RF Power

Mode	Freq	Channel	802.11g (2.4 GHz) Conducted Power [dBm]							
			Data Rate [Mbps]							
	[MHz]		6	9	12	18	24	36	48	54
802.11g	2412	1	12.21	12.19	12.11	12.15	12.48	12.36	12.49	12.39
802.11g	2437	6	12.01	12.06	11.94	11.96	12.27	12.15	12.37	12.23
802.11g	2462	11	12.38	12.38	12.34	12.31	12.48	12.45	11.90	12.47

Table 8-29
Antenna 1 IEEE 802.11n Average RF Power

Mode	Freq	Channel	802.11n (2.4 GHz) Conducted Power [dBm]							
			Data Rate [Mbps]							
	[MHz]		6.5	13	20	26	39	52	58	65
802.11n	2412	1	12.02	12.12	12.14	12.42	12.19	12.40	12.39	12.37
802.11n	2437	6	12.05	11.92	11.90	12.17	12.07	12.22	12.16	12.21
802.11n	2462	11	12.27	12.25	12.30	12.43	12.48	12.48	11.64	11.70

Table 8-30
Antenna 1 IEEE 802.11a Average RF Power

Mode	Freq	Channel	802.11a (5GHz) Conducted Power [dBm]							
			Data Rate [Mbps]							
	[MHz]		6	9	12	18	24	36	48	54
802.11a	5180	36*	9.32	8.49	9.34	8.46	8.83	8.63	8.96	8.74
802.11a	5200	40	9.24	8.48	9.27	9.23	8.63	8.58	8.87	8.57
802.11a	5220	44	**9.34**	8.45	9.25	9.33	8.60	8.58	8.86	8.54
802.11a	5240	48*	9.23	9.17	9.20	9.12	9.34	9.32	8.65	9.33
802.11a	5260	52*	**9.16**	9.07	9.09	9.10	9.32	9.24	8.45	9.23
802.11a	5280	56	8.93	8.92	8.96	8.96	9.26	9.07	9.26	9.20
802.11a	5300	60	8.85	8.92	8.78	8.86	9.10	8.88	9.18	8.95
802.11a	5320	64*	8.88	8.96	8.99	8.82	9.08	9.01	9.19	8.88
802.11a	5500	100	8.52	8.57	8.54	8.43	8.83	8.69	8.96	8.73
802.11a	5520	104*	8.43	8.57	8.52	8.41	8.68	8.58	8.96	8.67
802.11a	5540	108	8.42	8.58	8.44	8.45	8.55	8.68	8.69	8.53
802.11a	5560	112	8.43	8.50	8.36	8.46	8.63	8.46	8.73	8.72
802.11a	5580	116*	8.25	8.30	8.23	8.25	8.56	8.46	8.70	8.68
802.11a	5600	120	N/A	N/A	N/A	N/A	N/A	N/A	N/A	N/A
802.11a	5620	124	N/A	N/A	N/A	N/A	N/A	N/A	N/A	N/A
802.11a	5640	128	N/A	N/A	N/A	N/A	N/A	N/A	N/A	N/A
802.11a	5660	132	**9.33**	8.84	8.86	8.70	9.03	9.02	9.11	9.00
802.11a	5680	136*	8.66	8.61	8.78	8.59	8.75	8.69	9.04	8.71
802.11a	5700	140	8.53	8.50	8.57	8.31	8.84	8.67	9.02	8.70
802.11a	5745	149*	**9.25**	9.17	9.03	9.07	9.38	9.20	9.29	9.47
802.11a	5765	153	9.14	8.99	8.84	9.00	9.21	9.04	9.16	9.34
802.11a	5785	157*	9.21	9.11	9.07	9.00	9.37	9.16	9.25	9.46
802.11a	5805	161	9.18	9.12	8.93	8.98	9.32	9.10	9.24	9.39
802.11a	5825	165*	9.24	9.13	9.09	9.06	9.33	9.22	9.35	9.34

Per FCC KDB Publication 443999 and RSS-210 A9.2(3), transmission on channels which overlap the 5600-5650 MHz is prohibited as a client. This device does not transmit any beacons or initiate any transmissions in 5.3 and 5.5 GHz Band.

(*) – indicates default channels per KDB Publication 248227 D01v01r02. When the adjacent channels are higher in power then the default channels, these “required channels” are considered for SAR testing instead of the default channels.

© 2014 PCTEST Engineering Laboratory, Inc.

Table 8-31
Antenna 1 IEEE 802.11n Average RF Power – 20 MHz Bandwidth

Mode	Freq	Channel	20MHz BW 802.11n (5GHz) Conducted Power [dBm]							
			Data Rate [Mbps]							
	[MHz]		6.5	13	19.5	26	39	52	58.5	65
802.11n	5180	36	9.00	9.12	9.13	9.29	9.38	9.30	9.40	9.28
802.11n	5200	40	9.07	9.18	9.25	9.37	9.47	9.38	9.42	9.34
802.11n	5220	44	9.11	9.25	9.25	9.36	9.34	9.41	9.34	9.48
802.11n	5240	48	9.17	9.28	9.26	9.43	9.39	9.47	9.30	9.47
802.11n	5260	52	8.93	8.96	9.11	9.27	9.21	9.17	9.30	9.13
802.11n	5280	56	9.09	9.12	9.34	9.37	9.37	9.31	9.30	9.28
802.11n	5300	60	8.94	8.99	9.12	9.27	9.25	9.10	9.29	9.16
802.11n	5320	64	8.74	8.71	8.99	9.04	8.95	9.00	9.07	8.96
802.11n	5500	100	9.23	9.23	8.87	8.64	8.52	8.52	8.59	8.49
802.11n	5520	104	9.25	9.20	8.77	8.77	8.57	8.50	8.66	8.51
802.11n	5540	108	9.06	9.13	9.13	8.44	8.31	8.30	8.40	8.17
802.11n	5560	112	9.01	8.99	9.02	8.42	8.22	8.20	8.33	8.27
802.11n	5580	116	9.22	9.20	8.77	8.51	8.38	8.41	8.49	8.40
802.11n	5600	120	N/A	N/A	N/A	N/A	N/A	N/A	N/A	N/A
802.11n	5620	124	N/A	N/A	N/A	N/A	N/A	N/A	N/A	N/A
802.11n	5640	128	N/A	N/A	N/A	N/A	N/A	N/A	N/A	N/A
802.11n	5660	132	8.85	8.83	8.85	8.25	8.03	8.12	8.17	8.06
802.11n	5680	136	9.00	9.03	9.03	8.35	8.18	8.21	8.25	8.26
802.11n	5700	140	8.95	8.99	8.90	8.32	8.12	8.11	8.19	8.14
802.11n	5745	149	9.10	9.04	9.10	9.26	9.33	9.23	9.35	9.33
802.11n	5765	153	8.98	8.92	9.04	9.16	9.25	9.10	9.14	9.22
802.11n	5785	157	8.94	8.81	9.00	9.14	9.15	9.05	9.22	9.17
802.11n	5805	161	9.10	9.10	9.11	9.21	9.26	9.19	9.30	9.28
802.11n	5825	165	8.94	8.88	8.97	9.12	9.17	9.03	9.18	9.16

Table 8-32
Antenna 1 IEEE 802.11n Average RF Power – 40 MHz Bandwidth

Mode	Freq	Channel	40MHz BW 802.11n (5GHz) Conducted Power [dBm]							
			Data Rate [Mbps]							
	[MHz]		13.5	27	40.5	54	81	108	121.5	135
802.11n	5190	38	9.34	9.22	9.49	9.32	9.43	9.31	9.26	9.25
802.11n	5230	46	9.40	9.25	9.30	9.27	9.25	9.31	9.39	9.39
802.11n	5270	54	9.40	9.31	9.31	9.28	9.32	9.28	9.38	9.37
802.11n	5310	62	9.31	9.35	9.34	9.25	9.26	9.36	9.27	9.31
802.11n	5510	102	9.46	9.34	9.43	9.01	8.99	9.00	9.03	9.22
802.11n	5550	110	9.36	9.29	9.39	8.57	8.59	8.63	8.61	8.87
802.11n	5590	118	N/A	N/A	N/A	N/A	N/A	N/A	N/A	N/A
802.11n	5630	126	N/A	N/A	N/A	N/A	N/A	N/A	N/A	N/A
802.11n	5670	134	9.22	9.21	9.14	8.50	8.48	8.50	8.57	8.68
802.11n	5755	151	8.51	8.62	8.58	8.81	7.83	7.80	7.97	7.81
802.11n	5795	159	8.56	8.64	8.66	8.84	7.86	7.88	8.01	7.87

Table 8-33
Antenna 1 IEEE 802.11ac Average RF Power – 80 MHz Bandwidth

Mode	Freq	Channel	80MHz BW 802.11ac (5GHz) Conducted Power [dBm]									
			Data Rate [Mbps]									
			29.3	58.5	87.8	117	175.5	234	263.3	292.5	351	390
802.11ac	5210	42	**8.89**	8.98	9.02	9.01	8.88	9.01	9.00	9.11	9.13	9.12
802.11ac	5290	58	**8.80**	8.77	8.75	8.77	8.75	8.74	8.75	8.80	8.89	8.90
802.11ac	5530	106	**9.11**	8.77	8.34	8.32	8.30	8.31	8.77	8.78	9.10	9.09
802.11ac	5775	155	**8.96**	8.93	9.17	9.15	9.15	9.14	9.19	9.20	9.15	9.14

© 2014 PCTEST Engineering Laboratory, Inc.

Table 8-34
Antenna 2 IEEE 802.11b Average RF Power

Mode	Freq	Channel	802.11b (2.4 GHz) Conducted Power [dBm]			
			Data Rate [Mbps]			
	[MHz]		1	2	5.5	11
802.11b	2412	1*	**14.22**	14.35	14.46	14.42
802.11b	2437	6*	13.75	13.87	13.83	13.80
802.11b	2462	11*	14.06	14.35	14.27	14.24

Table 8-35
Antenna 2 IEEE 802.11g Average RF Power

Mode	Freq	Channel	802.11g (2.4 GHz) Conducted Power [dBm]							
			Data Rate [Mbps]							
	[MHz]		6	9	12	18	24	36	48	54
802.11g	2412	1	12.14	12.25	12.13	12.14	12.47	12.23	12.30	12.49
802.11g	2437	6	12.01	12.04	11.78	11.83	12.21	12.07	12.28	12.12
802.11g	2462	11	12.45	12.49	12.31	12.35	11.83	12.42	12.46	12.03

Table 8-36
Antenna 2 IEEE 802.11n Average RF Power

Mode	Freq	Channel	802.11n (2.4 GHz) Conducted Power [dBm]							
			Data Rate [Mbps]							
	[MHz]		6.5	13	20	26	39	52	58	65
802.11n	2412	1	12.26	12.21	12.17	12.37	12.37	12.35	12.33	12.36
802.11n	2437	6	11.99	11.99	11.98	12.14	12.24	12.06	12.19	12.14
802.11n	2462	11	12.42	12.44	12.39	11.75	11.78	11.65	12.49	12.43

Table 8-37
Antenna 2 IEEE 802.11a Average RF Power

Mode	Freq	Channel	802.11a (5GHz) Conducted Power [dBm]							
			Data Rate [Mbps]							
	[MHz]		6	9	12	18	24	36	48	54
802.11a	5180	36*	8.83	8.79	8.70	8.67	8.97	8.68	8.93	9.06
802.11a	5200	40	8.89	8.95	8.76	8.71	9.07	8.96	8.85	9.16
802.11a	5220	44	8.98	8.96	8.86	8.92	9.30	8.92	9.06	9.23
802.11a	5240	48*	**9.09**	9.14	9.00	8.96	9.27	8.95	9.20	9.05
802.11a	5260	52*	9.01	8.92	9.00	8.78	9.13	8.91	9.00	9.25
802.11a	5280	56	**9.13**	9.19	9.02	8.84	9.32	9.09	9.18	9.32
802.11a	5300	60	9.04	9.10	8.82	8.94	9.08	9.21	9.16	9.06
802.11a	5320	64*	9.10	9.07	8.98	9.05	9.28	9.08	9.25	9.13
802.11a	5500	100	8.95	9.16	9.00	8.84	9.28	9.02	9.23	9.33
802.11a	5520	104*	**9.20**	9.15	8.94	8.97	9.14	8.97	9.17	9.21
802.11a	5540	108	8.99	8.93	9.03	8.97	9.24	9.01	9.10	9.22
802.11a	5560	112	8.97	9.04	8.90	8.86	9.21	8.88	9.20	9.19
802.11a	5580	116*	8.95	8.99	8.80	8.72	9.05	8.91	9.17	9.15
802.11a	5600	120	N/A	N/A	N/A	N/A	N/A	N/A	N/A	N/A
802.11a	5620	124	N/A	N/A	N/A	N/A	N/A	N/A	N/A	N/A
802.11a	5640	128	N/A	N/A	N/A	N/A	N/A	N/A	N/A	N/A
802.11a	5660	132	8.81	8.90	8.82	8.68	9.06	8.88	8.90	9.16
802.11a	5680	136*	8.80	8.89	8.67	8.66	9.06	8.84	8.93	9.12
802.11a	5700	140	8.83	8.80	8.68	8.67	8.98	8.82	8.84	9.06
802.11a	5745	149*	8.87	8.82	8.78	8.73	9.11	8.86	9.08	9.06
802.11a	5765	153	8.85	8.90	8.65	8.58	8.95	8.84	9.05	9.02
802.11a	5785	157*	**8.92**	8.97	8.78	8.82	9.10	8.91	8.89	9.07
802.11a	5805	161	8.71	8.75	8.79	8.60	9.07	8.89	8.85	9.08
802.11a	5825	165*	8.72	8.81	8.64	8.67	8.93	8.89	8.88	9.08

Per FCC KDB Publication 443999 and RSS-210 A9.2(3), transmission on channels which overlap the 5600-5650 MHz is prohibited as a client. This device does not transmit any beacons or initiate any transmissions in 5.3 and 5.5 GHz Band.

(*) – indicates default channels per KDB Publication 248227 D01v01r02. When the adjacent channels are higher in power then the default channels, these “required channels” are considered for SAR testing instead of the default channels.

© 2014 PCTEST Engineering Laboratory, Inc.

Table 8-38
Antenna 2 IEEE 802.11n Average RF Power – 20 MHz Bandwidth

Mode	Freq	Channel	20MHz BW 802.11n (5GHz) Conducted Power [dBm]							
			Data Rate [Mbps]							
	[MHz]		6.5	13	19.5	26	39	52	58.5	65
802.11n	5180	36	8.94	8.82	8.98	9.05	9.16	9.04	9.20	9.21
802.11n	5200	40	9.05	9.05	9.11	9.21	9.25	9.06	9.23	9.27
802.11n	5220	44	9.02	9.16	9.21	9.24	9.27	9.18	9.23	9.24
802.11n	5240	48	9.23	9.24	9.17	9.28	9.22	9.19	9.20	9.20
802.11n	5260	52	8.95	8.95	8.96	9.16	9.13	8.73	8.64	8.71
802.11n	5280	56	9.04	8.90	9.06	9.13	9.26	8.67	8.69	8.73
802.11n	5300	60	9.10	9.08	9.12	9.36	9.27	8.74	8.74	8.74
802.11n	5320	64	9.19	9.08	9.19	9.29	9.28	8.67	8.72	8.69
802.11n	5500	100	9.33	9.31	9.29	9.24	9.26	8.64	8.62	8.64
802.11n	5520	104	9.39	9.20	9.21	9.23	9.28	8.66	8.59	8.69
802.11n	5540	108	9.33	9.20	9.31	9.24	9.23	8.59	8.61	8.64
802.11n	5560	112	9.40	9.28	9.23	9.23	9.21	8.73	8.65	8.69
802.11n	5580	116	9.18	9.28	9.24	9.20	9.33	8.59	8.57	8.67
802.11n	5600	120	N/A	N/A	N/A	N/A	N/A	N/A	N/A	N/A
802.11n	5620	124	N/A	N/A	N/A	N/A	N/A	N/A	N/A	N/A
802.11n	5640	128	N/A	N/A	N/A	N/A	N/A	N/A	N/A	N/A
802.11n	5660	132	9.25	9.24	9.15	9.28	9.21	8.62	8.67	8.66
802.11n	5680	136	9.07	9.20	9.20	9.24	9.23	8.76	8.64	8.62
802.11n	5700	140	9.06	8.98	9.16	9.22	9.25	8.62	8.69	8.68
802.11n	5745	149	8.82	8.69	8.78	8.86	8.94	8.96	9.04	9.03
802.11n	5765	153	8.58	8.69	8.75	8.86	8.80	9.08	9.07	9.04
802.11n	5785	157	8.81	8.68	8.62	8.98	8.90	9.06	9.01	9.03
802.11n	5805	161	8.79	8.74	8.71	8.91	9.07	9.06	8.97	8.78
802.11n	5825	165	8.76	8.62	8.65	9.02	8.90	8.99	9.04	9.05

Table 8-39
Antenna 2 IEEE 802.11n Average RF Power – 40 MHz Bandwidth

Mode	Freq	Channel	40MHz BW 802.11n (5GHz) Conducted Power [dBm]							
			Data Rate [Mbps]							
	[MHz]		13.5	27	40.5	54	81	108	121.5	135
802.11n	5190	38	9.19	9.28	9.27	9.23	9.24	9.24	9.21	9.20
802.11n	5230	46	9.25	9.22	9.23	9.33	9.32	9.27	9.21	9.28
802.11n	5270	54	9.23	9.15	9.11	9.21	9.23	9.08	9.14	9.15
802.11n	5310	62	9.34	8.88	9.05	9.17	9.18	9.22	9.09	9.12
802.11n	5510	102	9.20	8.78	9.14	9.20	9.22	9.22	9.20	9.18
802.11n	5550	110	9.28	9.04	9.06	9.13	9.07	9.07	9.11	9.14
802.11n	5590	118	N/A	N/A	N/A	N/A	N/A	N/A	N/A	N/A
802.11n	5630	126	N/A	N/A	N/A	N/A	N/A	N/A	N/A	N/A
802.11n	5670	134	9.27	9.27	9.27	9.34	9.32	9.30	9.35	9.32
802.11n	5755	151	9.11	9.02	9.04	9.01	9.05	9.03	9.10	9.05
802.11n	5795	159	9.15	9.12	9.06	9.06	9.07	9.13	9.01	9.13

Table 8-40
Antenna 2 IEEE 802.11ac Average RF Power – 80 MHz Bandwidth

Mode	Freq	Channel	80MHz BW 802.11ac (5GHz) Conducted Power [dBm]									
			Data Rate [Mbps]									
			29.3	58.5	87.8	117	175.5	234	263.3	292.5	351	390
802.11ac	5210	42	**8.51**	8.21	8.25	8.51	8.55	8.63	8.60	8.66	8.67	8.68
802.11ac	5290	58	**8.62**	8.22	8.23	8.53	8.64	8.56	8.56	8.62	8.84	8.86
802.11ac	5530	106	**8.68**	8.45	8.51	8.74	8.86	8.76	8.82	8.74	8.71	8.72
802.11ac	5775	155	**8.58**	8.43	8.35	8.63	8.80	8.82	8.80	8.68	8.69	8.70

© 2014 PCTEST Engineering Laboratory, Inc.

Table 8-41
MIMO IEEE 802.11n Average RF Power

Mode	Freq	Channel	802.11n (2.4 GHz) Conducted Power [dBm]
			Data Rate [Mbps]
	[MHz]		13
802.11n	2412	1	16.58
802.11n	2437	6	**17.08**
802.11n	2462	11	16.51

Table 8-42
MIMO IEEE 802.11n Average RF Power – 20 MHz Bandwidth

Mode	Freq	Channel	20MHz BW 802.11n (5GHz) Conducted Power [dBm]
			Data Rate [Mbps]
	[MHz]		13
802.11n	5180	36	10.92
802.11n	5200	40	**11.07**
802.11n	5220	44	11.05
802.11n	5240	48	10.99
802.11n	5260	52	10.84
802.11n	5280	56	**10.93**
802.11n	5300	60	10.85
802.11n	5320	64	10.83
802.11n	5500	100	10.85
802.11n	5520	104	10.89
802.11n	5540	108	**10.93**
802.11n	5560	112	10.77
802.11n	5580	116	10.86
802.11n	5600	120	N/A
802.11n	5620	124	N/A
802.11n	5640	128	N/A
802.11n	5660	132	10.87
802.11n	5680	136	10.67
802.11n	5700	140	10.78
802.11n	5745	149	10.92
802.11n	5765	153	10.94
802.11n	5785	157	10.95
802.11n	5805	161	10.89
802.11n	5825	165	**11.09**

Table 8-43
MIMO IEEE 802.11n Average RF Power – 40 MHz Bandwidth

Mode	Freq	Channel	40MHz BW 802.11n (5GHz) Conducted Power [dBm]
			Data Rate [Mbps]
	[MHz]		**27**
802.11n	5190	38	10.73
802.11n	5230	46	10.94
802.11n	5270	54	10.91
802.11n	5310	62	10.87
802.11n	5510	102	10.84
802.11n	5550	110	10.66
802.11n	5590	118	N/A
802.11n	5630	126	N/A
802.11n	5670	134	11.07
802.11n	5755	151	10.76
802.11n	5795	159	10.82

© 2014 PCTEST Engineering Laboratory, Inc.

Table 8-44
MIMO IEEE 802.11ac Average RF Power – 80 MHz Bandwidth

Mode	Freq	Channel	80MHz BW 802.11ac (5GHz) Conducted Power [dBm]
			Data Rate [Mbps]
			58.5
802.11ac	5210	42	11.24
802.11ac	5290	58	11.12
802.11ac	5530	106	11.06
802.11ac	5775	155	10.90

Justification for reduced test configurations for WIFI channels per KDB Publication 248227 D01v01r02 and October 2012/April 2013 FCC/TCB Meeting Notes:

- For SISO 2.4 GHz, highest average RF output power channel for the lowest data rate for IEEE 802.11b were selected for SAR evaluation. Other IEEE 802.11 modes (including 802.11g/n) were not investigated since the average output powers over all channels and data rates were not more than 0.25 dB higher than the tested channel in the lowest data rate of IEEE 802.11b mode.
- For SISO 5 GHz, highest average RF output power channel for the lowest data rate for IEEE 802.11a were selected for SAR evaluation. Other IEEE 802.11 modes (including 802.11n 20 and 40 MHz Bandwidth) were not investigated since the average output powers over all channels and data rates were not more than 0.25 dB higher than the tested channel in the lowest data rate of IEEE 802.11a mode.
- Per April 2013 TCB Workshop notes, full SAR tests for SISO IEEE 802.11ac configurations were not required because the average output power was not more than 0.25 dB higher than IEEE 802.11a mode. IEEE 802.11ac was evaluated for the highest IEEE 802.11a position in each 5 GHz band and exposure condition.
- For MIMO 2.4 GHz and 5 GHz operations, the highest average RF output power channel for the lowest data rate for IEEE 802.11n (20 MHz bandwidth) was selected for SAR evaluation. Other IEEE 802.11 modes and bandwidths were not investigated for MIMO operations since the maximum allowed output power (including tolerance) was not higher for these modes.
- When the maximum extrapolated peak SAR of the zoom scan for the maximum output channel is <1.6 W/kg and the reported 1g averaged SAR is <0.8 W/kg, SAR testing on other channels is not required. Otherwise, the other default (or corresponding required) test channels were additionally tested using the lowest data rate.
- The individual spectra for each 2x2 MIMO WIFI Antenna were summed mathematically in linear power units for the MIMO output power measurements.
- The bolded data rate and channel above were tested for SAR.

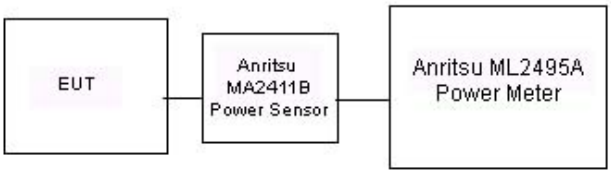

Figure 8-2
Power Measurement Setup for Bandwidths < 50 MHz

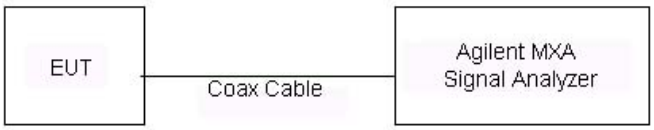

Figure 8-3
Power Measurement Setup for Bandwidths > 50 MHz

© 2014 PCTEST Engineering Laboratory, Inc.

8.4 Bluetooth Conducted Powers

Table 9-24
Bluetooth RF Conducted Powers

Frequency [MHz]	Data Rate [Mbps]	Channel No.	Avg Conducted Power	
			[dBm]	[mW]
2402	1.0	0	7.92	6.187
2441	1.0	39	11.16	13.063
2480	1.0	78	11.35	13.661
2402	2.0	0	4.75	2.983
2441	2.0	39	8.46	7.013
2480	2.0	78	7.49	5.612
2402	3.0	0	4.81	3.028
2441	3.0	39	8.50	7.088
2480	3.0	78	7.54	5.672

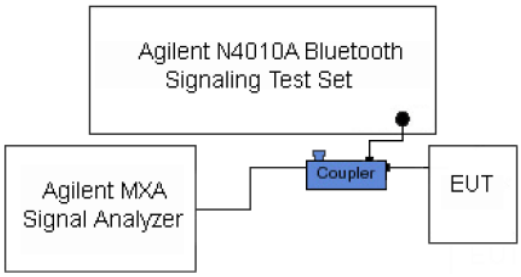

Figure 8-4
Power Measurement Setup

© 2014 PCTEST Engineering Laboratory, Inc.

9 SYSTEM VERIFICATION

9.1 Tissue Verification

Table 9-1
Measured Tissue Properties

Calibrated for Tests Performed on:	Tissue Type	Tissue Temp During Calibration (C˚)	Measured Frequency (MHz)	Measured Conductivity, σ (S/m)	Measured Dielectric Constant, ε	TARGET Conductivity, σ (S/m)	TARGET Dielectric Constant, ε	% dev σ	% dev ε
8/12/2014	750B	22.5	695	0.915	54.526	0.959	55.745	-4.59%	-2.19%
			710	0.929	54.407	0.960	55.687	-3.23%	-2.30%
			725	0.944	54.258	0.961	55.629	-1.77%	-2.46%
			740	0.959	54.081	0.963	55.570	-0.42%	-2.68%
			755	0.974	53.955	0.964	55.512	1.04%	-2.80%
8/18/2014	835B	22.2	820	0.938	55.332	0.969	55.258	-3.20%	0.13%
			835	0.957	55.241	0.970	55.200	-1.34%	0.07%
			850	0.974	55.090	0.988	55.154	-1.42%	-0.12%
8/21/2014	835B	24.2	820	0.929	54.762	0.969	55.258	-4.13%	-0.90%
			835	0.944	54.612	0.970	55.200	-2.68%	-1.07%
			850	0.959	54.475	0.988	55.154	-2.94%	-1.23%
8/14/2014	1750B	23.8	1710	1.407	52.178	1.463	53.537	-3.83%	-2.54%
			1750	1.448	52.043	1.488	53.432	-2.69%	-2.60%
			1790	1.490	51.876	1.514	53.326	-1.59%	-2.72%
8/18/2014	1900B	22.2	1850	1.508	51.802	1.520	53.300	-0.79%	-2.81%
			1880	1.544	51.756	1.520	53.300	1.58%	-2.90%
			1910	1.582	51.652	1.520	53.300	4.08%	-3.09%
8/28/2014	1900B	22.1	1850	1.466	52.100	1.520	53.300	-3.55%	-2.25%
			1880	1.502	52.007	1.520	53.300	-1.18%	-2.43%
			1910	1.536	51.906	1.520	53.300	1.05%	-2.62%
6/24/2014	2450B	21.4	2401	1.884	51.852	1.903	52.765	-1.00%	-1.73%
			2450	1.949	51.693	1.950	52.700	-0.05%	-1.91%
			2499	2.011	51.517	2.019	52.638	-0.40%	-2.13%
06/23/2014	5200B-5800B	23.0	5180	5.477	47.362	5.276	49.041	3.81%	-3.42%
			5200	5.500	47.385	5.299	49.014	3.79%	-3.32%
			5220	5.514	47.317	5.323	48.987	3.59%	-3.41%
			5240	5.537	47.264	5.346	48.960	3.57%	-3.46%
			5260	5.557	47.241	5.369	48.933	3.50%	-3.46%
			5280	5.604	47.152	5.393	48.906	3.91%	-3.59%
			5300	5.620	47.117	5.416	48.879	3.77%	-3.60%
			5320	5.654	47.153	5.439	48.851	3.95%	-3.48%
			5500	5.873	46.816	5.650	48.607	3.95%	-3.68%
			5520	5.904	46.788	5.673	48.580	4.07%	-3.69%
			5540	5.938	46.757	5.696	48.553	4.25%	-3.70%
			5560	5.964	46.725	5.720	48.526	4.27%	-3.71%
			5580	5.996	46.729	5.743	48.499	4.41%	-3.65%
			5600	6.009	46.678	5.766	48.471	4.21%	-3.70%
			5660	6.100	46.557	5.837	48.390	4.51%	-3.79%
			5700	6.150	46.543	5.883	48.336	4.54%	-3.71%
			5745	6.202	46.392	5.936	48.275	4.48%	-3.90%
			5765	6.234	46.367	5.959	48.248	4.61%	-3.90%
			5785	6.270	46.342	5.982	48.220	4.81%	-3.89%
			5800	6.287	46.323	6.000	48.200	4.78%	-3.89%
			5825	6.310	46.300	6.029	48.166	4.66%	-3.87%

The above measured tissue parameters were used in the DASY software. The DASY software was used to perform interpolation to determine the dielectric parameters at the SAR test device frequencies (per KDB Publication 865664 and IEEE 1528-2013 6.6.1.2). The tissue parameters listed in the SAR test plots may slightly differ from the table above due to significant digit rounding in the software.

© 2014 PCTEST Engineering Laboratory, Inc.

9.2 Test System Verification

Prior to SAR assessment, the system is verified to ±10% of the SAR measurement on the reference dipole at the time of calibration by the calibration facility. Full system validation status and result summary can be found in Appendix E.

Table 9-2
System Verification Results

System Verification TARGET & MEASURED												
SAR System #	Tissue Frequency (MHz)	Tissue Type	Date:	Amb. Temp (°C)	Liquid Temp (°C)	Input Power (W)	Dipole SN	Probe SN	Measured SAR_{1g} (W/kg)	1 W Target SAR_{1g} (W/kg)	1 W Normalized SAR_{1g} (W/kg)	$Deviation_{1g}$ (%)
J	750	BODY	08/12/2014	23.2	22.5	0.100	1003	3332	0.916	8.770	9.160	4.45%
B	835	BODY	08/18/2014	23.4	22.2	0.100	4d132	3288	0.982	9.580	9.820	2.51%
B	835	BODY	08/21/2014	24.3	24.2	0.100	4d132	3288	0.948	9.580	9.480	-1.04%
J	1750	BODY	08/14/2014	23.6	23.8	0.100	1008	3332	4.000	37.600	40.000	6.38%
B	1900	BODY	08/18/2014	23.0	22.2	0.100	5d148	3288	4.210	39.300	42.100	7.12%
H	1900	BODY	08/28/2014	23.5	22.1	0.100	5d141	3319	3.920	40.600	39.200	-3.45%
C	2450	BODY	06/24/2014	20.9	21.4	0.100	719	3213	5.360	51.700	53.600	3.68%
A	5200	BODY	06/23/2014	22.5	23.0	0.100	1007	3920	7.350	72.600	73.500	1.24%
A	5300	BODY	06/23/2014	22.6	23.0	0.100	1007	3920	7.220	74.700	72.200	-3.35%
A	5500	BODY	06/23/2014	22.6	23.0	0.100	1007	3920	7.530	75.900	75.300	-0.79%
A	5600	BODY	06/23/2014	22.6	23.0	0.100	1007	3920	7.840	77.300	78.400	1.42%
A	5800	BODY	06/23/2014	22.6	22.9	0.100	1007	3920	7.060	72.900	70.600	-3.16%

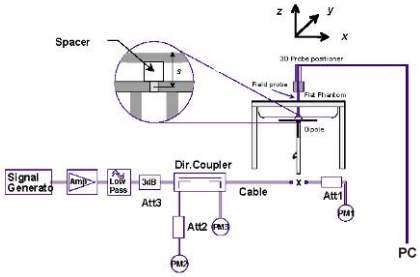

Figure 9-1
System Verification Setup Diagram

Figure 9-2
System Verification Setup Photo

© 2014 PCTEST Engineering Laboratory, Inc.

10 SAR DATA SUMMARY

10.1 Standalone Body SAR Data

Table 10-1
CDMA Body SAR Data

MEASUREMENT RESULTS														
FREQUENCY		Mode	Service	Maximum Allowed Power [dBm]	Conducted Power [dBm]	Power Drift [dB]	Spacing	Device Serial Number	Duty Cycle	Side	SAR (1g)	Scaling Factor	Scaled SAR (1g)	Plot #
MHz	Ch.										(W/kg)		(W/kg)	
836.52	384	Cell. CDMA	EVDO Rev. 0	25.0	24.48	0.06	21 mm	FCC#5	1:1	back	0.218	1.127	0.246	
836.52	384	Cell. CDMA	EVDO Rev. 0	19.0	18.61	-0.04	0 mm	FCC#8	1:1	back	0.325	1.094	0.356	
836.52	384	Cell. CDMA	EVDO Rev. 0	25.0	24.48	0.00	19 mm	FCC#5	1:1	top	0.058	1.127	0.065	
836.52	384	Cell. CDMA	EVDO Rev. 0	19.0	18.61	0.11	0 mm	FCC#8	1:1	top	0.109	1.094	0.119	
836.52	384	Cell. CDMA	EVDO Rev. 0	25.0	24.48	0.01	0 mm	FCC#5	1:1	right	0.328	1.127	0.370	A1
1880.00	600	PCS CDMA	EVDO Rev. 0	25.0	24.60	0.08	21 mm	FCC#5	1:1	back	0.654	1.096	0.717	
1880.00	600	PCS CDMA	EVDO Rev. 0	12.5	11.79	-0.03	0 mm	FCC#8	1:1	back	0.338	1.178	0.398	
1880.00	600	PCS CDMA	EVDO Rev. 0	25.0	24.60	-0.04	19 mm	FCC#5	1:1	top	0.676	1.096	0.741	A2
1880.00	600	PCS CDMA	EVDO Rev. 0	12.5	11.79	0.09	0 mm	FCC#8	1:1	top	0.329	1.178	0.388	
1880.00	600	PCS CDMA	EVDO Rev. 0	25.0	24.60	0.00	0 mm	FCC#5	1:1	right	0.135	1.096	0.148	
ANSI / IEEE C95.1 1992 - SAFETY LIMIT Spatial Peak Uncontrolled Exposure/General Population							Body 1.6 W/kg (mW/g) averaged over 1 gram							

Table 10-2
LTE Band 12 Body SAR

MEASUREMENT RESULTS																			
FREQUENCY			Mode	Bandwidth [MHz]	Maximum Allowed Power [dBm]	Conducted Power [dBm]	Power Drift [dB]	MPR [dB]	Device Serial Number	Modulation	RB Size	RB Offset	Spacing	Side	Duty Cycle	SAR (1g)	Scaling Factor	Scaled SAR (1g)	Plot #
MHz	Ch.															(W/kg)		(W/kg)	
707.50	23095	Mid	LTE Band 12	10	23.5	23.03	0.03	0	FCC#4	QPSK	1	49	21 mm	back	1:1	0.059	1.114	0.066	
707.50	23095	Mid	LTE Band 12	10	22.5	21.87	-0.01	1	FCC#4	QPSK	25	25	21 mm	back	1:1	0.055	1.156	0.064	
707.50	23095	Mid	LTE Band 12	10	23.5	23.03	-0.14	0	FCC#4	QPSK	1	49	19 mm	top	1:1	0.030	1.114	0.033	
707.50	23095	Mid	LTE Band 12	10	22.5	21.87	0.03	1	FCC#4	QPSK	25	25	19 mm	top	1:1	0.023	1.156	0.027	
707.50	23095	Mid	LTE Band 12	10	23.5	23.03	0.00	0	FCC#4	QPSK	1	49	0 mm	right	1:1	0.306	1.114	0.341	A3
707.50	23095	Mid	LTE Band 12	10	22.5	21.87	0.05	1	FCC#4	QPSK	25	25	0 mm	right	1:1	0.226	1.156	0.261	
707.50	23095	Mid	LTE Band 12	10	17.5	17.16	0.16	0	FCC#1	QPSK	1	25	0 mm	back	1:1	0.001	1.081	0.001	
707.50	23095	Mid	LTE Band 12	10	17.5	17.12	0.12	0	FCC#1	QPSK	25	12	0 mm	back	1:1	0.001	1.091	0.001	
707.50	23095	Mid	LTE Band 12	10	17.5	17.16	0.21	0	FCC#1	QPSK	1	25	0 mm	top	1:1	0.001	1.081	0.001	
707.50	23095	Mid	LTE Band 12	10	17.5	17.12	0.16	0	FCC#1	QPSK	25	12	0 mm	top	1:1	0.001	1.091	0.001	
ANSI / IEEE C95.1 1992 - SAFETY LIMIT Spatial Peak Uncontrolled Exposure/General Population								Body 1.6 W/kg (mW/g) averaged over 1 gram											

Table 10-3
LTE Band 5 Body SAR

MEASUREMENT RESULTS																			
FREQUENCY			Mode	Bandwidth [MHz]	Maximum Allowed Power [dBm]	Conducted Power [dBm]	Power Drift [dB]	MPR [dB]	Device Serial Number	Modulation	RB Size	RB Offset	Spacing	Side	Duty Cycle	SAR (1g)	Scaling Factor	Scaled SAR (1g)	Plot #
MHz	Ch.															(W/kg)		(W/kg)	
836.50	20525	Mid	LTE Band 5 (Cell)	10	23.5	23.13	0.05	0	FCC#4	QPSK	1	25	21 mm	back	1:1	0.050	1.089	0.054	
836.50	20525	Mid	LTE Band 5 (Cell)	10	22.5	22.06	0.02	1	FCC#4	QPSK	25	12	21 mm	back	1:1	0.055	1.107	0.061	
836.50	20525	Mid	LTE Band 5 (Cell)	10	23.5	23.13	-0.10	0	FCC#4	QPSK	1	25	19 mm	top	1:1	0.042	1.089	0.046	
836.50	20525	Mid	LTE Band 5 (Cell)	10	22.5	22.06	0.07	1	FCC#4	QPSK	25	12	19 mm	top	1:1	0.021	1.107	0.023	
836.50	20525	Mid	LTE Band 5 (Cell)	10	23.5	23.13	-0.05	0	FCC#4	QPSK	1	25	0 mm	right	1:1	0.293	1.089	0.319	A4
836.50	20525	Mid	LTE Band 5 (Cell)	10	22.5	22.06	0.01	1	FCC#4	QPSK	25	12	0 mm	right	1:1	0.225	1.107	0.249	
836.50	20525	Mid	LTE Band 5 (Cell)	10	17.0	16.37	-0.06	0	FCC#1	QPSK	1	49	0 mm	back	1:1	0.056	1.156	0.065	
836.50	20525	Mid	LTE Band 5 (Cell)	10	17.0	16.27	-0.14	0	FCC#1	QPSK	25	25	0 mm	back	1:1	0.062	1.183	0.073	
836.50	20525	Mid	LTE Band 5 (Cell)	10	17.0	16.37	-0.10	0	FCC#1	QPSK	1	49	0 mm	top	1:1	0.165	1.156	0.191	
836.50	20525	Mid	LTE Band 5 (Cell)	10	17.0	16.27	0.01	0	FCC#1	QPSK	25	25	0 mm	top	1:1	0.165	1.183	0.195	
ANSI / IEEE C95.1 1992 - SAFETY LIMIT Spatial Peak Uncontrolled Exposure/General Population								Body 1.6 W/kg (mW/g) averaged over 1 gram											

© 2014 PCTEST Engineering Laboratory, Inc.

Table 10-4
LTE Band 4 Body SAR

MEASUREMENT RESULTS																			
FREQUENCY			Mode	Bandwidth [MHz]	Maximum Allowed Power [dBm]	Conducted Power [dBm]	Power Drift [dB]	MPR [dB]	Device Serial Number	Modulation	RB Size	RB Offset	Spacing	Side	Duty Cycle	SAR (1g)	Scaling Factor	Scaled SAR (1g)	Plot #
MHz	Ch.															(W/kg)		(W/kg)	
1732.50	20175	Mid	LTE Band 4 (AWS)	20	23.5	22.87	0.07	0	FCC#4	QPSK	1	99	21 mm	back	1:1	0.058	1.156	0.067	
1732.50	20175	Mid	LTE Band 4 (AWS)	20	22.5	21.58	0.05	1	FCC#4	QPSK	50	0	21 mm	back	1:1	0.038	1.236	0.047	
1732.50	20175	Mid	LTE Band 4 (AWS)	20	23.5	22.87	0.02	0	FCC#4	QPSK	1	99	19 mm	top	1:1	0.061	1.156	0.071	
1732.50	20175	Mid	LTE Band 4 (AWS)	20	22.5	21.58	0.02	1	FCC#4	QPSK	50	0	19 mm	top	1:1	0.077	1.236	0.095	
1732.50	20175	Mid	LTE Band 4 (AWS)	20	23.5	22.87	0.05	0	FCC#4	QPSK	1	99	0 mm	right	1:1	0.205	1.156	0.237	A5
1732.50	20175	Mid	LTE Band 4 (AWS)	20	22.5	21.58	0.18	1	FCC#4	QPSK	50	0	0 mm	right	1:1	0.156	1.236	0.193	
1732.50	20175	Mid	LTE Band 4 (AWS)	20	12.5	12.19	-0.19	0	FCC#1	QPSK	1	50	0 mm	back	1:1	0.030	1.074	0.032	
1732.50	20175	Mid	LTE Band 4 (AWS)	20	12.5	12.13	0.11	0	FCC#1	QPSK	50	25	0 mm	back	1:1	0.030	1.089	0.033	
1732.50	20175	Mid	LTE Band 4 (AWS)	20	12.5	12.19	0.05	0	FCC#1	QPSK	1	50	0 mm	top	1:1	0.022	1.074	0.024	
1732.50	20175	Mid	LTE Band 4 (AWS)	20	12.5	12.13	-0.07	0	FCC#1	QPSK	50	25	0 mm	top	1:1	0.022	1.089	0.024	
ANSI / IEEE C95.1 1992 - SAFETY LIMIT Spatial Peak Uncontrolled Exposure/General Population						Body 1.6 W/kg (mW/g) averaged over 1 gram													

Table 10-5
LTE Band 2 Body SAR

MEASUREMENT RESULTS																			
FREQUENCY			Mode	Bandwidth [MHz]	Maximum Allowed Power [dBm]	Conducted Power [dBm]	Power Drift [dB]	MPR [dB]	Device Serial Number	Modulation	RB Size	RB Offset	Spacing	Side	Duty Cycle	SAR (1g)	Scaling Factor	Scaled SAR (1g)	Plot #
MHz	Ch.															(W/kg)		(W/kg)	
1860.00	18700	Low	LTE Band 2 (PCS)	20	23.5	23.05	-0.01	0	FCC#4	QPSK	1	50	21 mm	back	1:1	0.767	1.109	0.851	
1880.00	18900	Mid	LTE Band 2 (PCS)	20	23.5	22.97	0.01	0	FCC#4	QPSK	1	99	21 mm	back	1:1	0.785	1.130	0.887	
1900.00	19100	High	LTE Band 2 (PCS)	20	23.5	22.87	0.00	0	FCC#4	QPSK	1	0	21 mm	back	1:1	0.873	1.156	1.009	
1860.00	18700	Low	LTE Band 2 (PCS)	20	22.5	21.74	0.09	1	FCC#4	QPSK	50	25	21 mm	back	1:1	0.647	1.191	0.771	
1860.00	18700	Low	LTE Band 2 (PCS)	20	22.5	21.72	0.00	1	FCC#4	QPSK	100	0	21 mm	back	1:1	0.625	1.197	0.748	
1860.00	18700	Low	LTE Band 2 (PCS)	20	23.5	23.05	0.02	0	FCC#4	QPSK	1	50	19 mm	top	1:1	0.989	1.109	**1.097**	
1880.00	18900	Mid	LTE Band 2 (PCS)	20	23.5	22.97	-0.02	0	FCC#4	QPSK	1	99	19 mm	top	1:1	0.968	1.130	1.094	
1900.00	19100	High	LTE Band 2 (PCS)	20	23.5	22.87	-0.04	0	FCC#4	QPSK	1	0	19 mm	top	1:1	0.723	1.156	0.836	
1860.00	18700	Low	LTE Band 2 (PCS)	20	22.5	21.74	0.03	1	FCC#4	QPSK	50	25	19 mm	top	1:1	0.513	1.191	0.611	
1860.00	18700	Low	LTE Band 2 (PCS)	20	22.5	21.72	-0.05	1	FCC#4	QPSK	100	0	19 mm	top	1:1	0.558	1.197	0.668	
1860.00	18700	Low	LTE Band 2 (PCS)	20	23.5	23.05	0.05	0	FCC#4	QPSK	1	50	0 mm	right	1:1	0.167	1.109	0.185	
1860.00	18700	Low	LTE Band 2 (PCS)	20	22.5	21.74	0.02	1	FCC#4	QPSK	50	25	0 mm	right	1:1	0.136	1.191	0.162	
1860.00	18700	Low	LTE Band 2 (PCS)	20	12.5	12.30	-0.07	0	FCC#3	QPSK	1	50	0 mm	back	1:1	0.967	1.047	1.012	
1880.00	18900	Mid	LTE Band 2 (PCS)	20	12.5	12.29	-0.07	0	FCC#3	QPSK	1	50	0 mm	back	1:1	0.968	1.050	1.016	
1900.00	19100	High	LTE Band 2 (PCS)	20	12.5	12.43	-0.02	0	FCC#3	QPSK	1	50	0 mm	back	1:1	1.080	1.016	**1.097**	A6
1860.00	18700	Low	LTE Band 2 (PCS)	20	12.5	12.31	0.04	0	FCC#3	QPSK	50	0	0 mm	back	1:1	1.010	1.045	1.055	
1880.00	18900	Mid	LTE Band 2 (PCS)	20	12.5	12.23	-0.05	0	FCC#3	QPSK	50	0	0 mm	back	1:1	0.923	1.064	0.982	
1900.00	19100	High	LTE Band 2 (PCS)	20	12.5	12.39	0.00	0	FCC#3	QPSK	50	25	0 mm	back	1:1	1.010	1.026	1.036	
1900.00	19100	High	LTE Band 2 (PCS)	20	12.5	12.27	-0.02	0	FCC#3	QPSK	100	0	0 mm	back	1:1	0.994	1.054	1.048	
1900.00	19100	High	LTE Band 2 (PCS)	20	12.5	12.43	-0.01	0	FCC#3	QPSK	1	50	0 mm	top	1:1	0.322	1.016	0.327	
1900.00	19100	High	LTE Band 2 (PCS)	20	12.5	12.39	0.00	0	FCC#3	QPSK	50	25	0 mm	top	1:1	0.323	1.026	0.331	
1900.00	19100	High	LTE Band 2 (PCS)	20	12.5	12.43	-0.14	0	FCC#3	QPSK	1	50	0 mm	back	1:1	1.000	1.016	1.016	
ANSI / IEEE C95.1 1992 - SAFETY LIMIT Spatial Peak Uncontrolled Exposure/General Population						Body 1.6 W/kg (mW/g) averaged over 1 gram													

Blue entry represents variability testing.

© 2014 PCTEST Engineering Laboratory, Inc.

Table 10-6
Antenna 1 DTS Body SAR

MEASUREMENT RESULTS															
FREQUENCY		Mode	Service	Maximum Allowed Power [dBm]	Conducted Power [dBm]	Power Drift [dB]	Spacing	Device Serial Number	Data Rate (Mbps)	Side	Duty Cycle	SAR (1g)	Scaling Factor	Scaled SAR (1g)	Plot #
MHz	Ch.											(W/kg)		(W/kg)	
2412	1	IEEE 802.11b	DSSS	14.5	13.75	-0.20	0 mm	FCC #7	1	back	1:1	0.409	1.189	0.486	
2437	6	IEEE 802.11b	DSSS	14.5	13.60	0.02	0 mm	FCC #7	1	back	1:1	0.390	1.230	0.480	
2462	11	IEEE 802.11b	DSSS	14.5	13.80	-0.01	0 mm	FCC #7	1	back	1:1	0.498	1.175	0.585	
2462	11	IEEE 802.11b	DSSS	14.5	13.80	0.06	0 mm	FCC #7	1	top	1:1	0.161	1.175	0.189	
2462	11	IEEE 802.11b	DSSS	14.5	13.80	0.21	0 mm	FCC #7	1	left	1:1	0.025	1.175	0.029	
5745	149	IEEE 802.11a	OFDM	9.5	9.25	0.05	0 mm	FCC #7	6	back	1:1	0.680	1.059	0.720	
5785	157	IEEE 802.11a	OFDM	9.5	9.21	0.00	0 mm	FCC #7	6	back	1:1	0.708	1.069	0.757	
5825	165	IEEE 802.11a	OFDM	9.5	9.24	0.03	0 mm	FCC #7	6	back	1:1	0.733	1.062	**0.778**	A8
5775	155	IEEE 802.11ac	OFDM	9.5	8.96	-0.01	0 mm	FCC #7	29.3	back	1:1	0.535	1.132	0.606	
5745	149	IEEE 802.11a	OFDM	9.5	9.25	0.13	0 mm	FCC #7	6	top	1:1	0.035	1.059	0.037	
5745	149	IEEE 802.11a	OFDM	9.5	9.25	0.14	0 mm	FCC #7	6	left	1:1	0.024	1.059	0.025	
ANSI / IEEE C95.1 1992 - SAFETY LIMIT Spatial Peak Uncontrolled Exposure/General Population							Body 1.6 W/kg (mW/g) averaged over 1 gram								

Table 10-7
Antenna 1 NII Body SAR

MEASUREMENT RESULTS															
FREQUENCY		Mode	Service	Maximum Allowed Power [dBm]	Conducted Power [dBm]	Power Drift [dB]	Spacing	Device Serial Number	Data Rate (Mbps)	Side	Duty Cycle	SAR (1g)	Scaling Factor	Scaled SAR (1g)	Plot #
MHz	Ch.											(W/kg)		(W/kg)	
5180	36	IEEE 802.11a	OFDM	9.5	9.32	0.16	0 mm	FCC #7	6	back	1:1	0.252	1.042	0.263	
5220	44	IEEE 802.11a	OFDM	9.5	9.34	0.05	0 mm	FCC #7	6	back	1:1	0.236	1.038	0.245	
5210	42	IEEE 802.11ac	OFDM	9.5	8.89	0.13	0 mm	FCC #7	29.3	back	1:1	0.181	1.151	0.208	
5220	44	IEEE 802.11a	OFDM	9.5	9.34	-0.20	0 mm	FCC #7	6	top	1:1	0.037	1.038	0.038	
5220	44	IEEE 802.11a	OFDM	9.5	9.34	-0.16	0 mm	FCC #7	6	left	1:1	0.022	1.038	0.023	
5260	52	IEEE 802.11a	OFDM	9.5	9.16	-0.03	0 mm	FCC #7	6	back	1:1	0.242	1.081	0.262	
5320	64	IEEE 802.11a	OFDM	9.5	8.88	0.02	0 mm	FCC #7	6	back	1:1	0.267	1.153	0.308	
5290	58	IEEE 802.11ac	OFDM	9.5	8.80	0.06	0 mm	FCC #7	29.3	back	1:1	0.215	1.175	0.253	
5260	52	IEEE 802.11a	OFDM	9.5	9.16	0.11	0 mm	FCC #7	6	top	1:1	0.035	1.081	0.038	
5260	52	IEEE 802.11a	OFDM	9.5	9.16	-0.20	0 mm	FCC #7	6	left	1:1	0.022	1.081	0.024	
5500	100	IEEE 802.11a	OFDM	9.5	8.52	0.10	0 mm	FCC #7	6	back	1:1	0.353	1.253	0.442	
5560	112	IEEE 802.11a	OFDM	9.5	8.43	0.14	0 mm	FCC #7	6	back	1:1	0.444	1.279	0.568	
5660	132	IEEE 802.11a	OFDM	9.5	9.33	0.13	0 mm	FCC #7	6	back	1:1	0.595	1.040	0.619	A9
5530	106	IEEE 802.11ac	OFDM	9.5	9.11	0.07	0 mm	FCC #7	29.3	back	1:1	0.291	1.094	0.318	
5660	132	IEEE 802.11a	OFDM	9.5	9.33	0.09	0 mm	FCC #7	6	top	1:1	0.043	1.040	0.045	
5660	132	IEEE 802.11a	OFDM	9.5	9.33	-0.02	0 mm	FCC #7	6	left	1:1	0.026	1.040	0.027	
ANSI / IEEE C95.1 1992 - SAFETY LIMIT Spatial Peak Uncontrolled Exposure/General Population							Body 1.6 W/kg (mW/g) averaged over 1 gram								

© 2014 PCTEST Engineering Laboratory, Inc.

Table 10-8
Antenna 2 DTS Body SAR

MEASUREMENT RESULTS															
FREQUENCY		Mode	Service	Maximum Allowed Power [dBm]	Conducted Power [dBm]	Power Drift [dB]	Spacing	Device Serial Number	Data Rate (Mbps)	Side	Duty Cycle	SAR (1g)	Scaling Factor	Scaled SAR (1g)	Plot #
MHz	Ch.											(W/kg)		(W/kg)	
2412	1	IEEE 802.11b	DSSS	14.5	14.22	0.00	0 mm	FCC #7	1	back	1:1	0.397	1.067	0.424	
2412	1	IEEE 802.11b	DSSS	14.5	14.22	0.04	0 mm	FCC #7	1	top	1:1	0.124	1.067	0.132	
2412	1	IEEE 802.11b	DSSS	14.5	14.22	-0.13	0 mm	FCC #7	1	left	1:1	0.003	1.067	0.003	
5745	149	IEEE 802.11a	OFDM	9.5	8.87	0.09	0 mm	FCC #7	6	back	1:1	0.429	1.156	0.496	
5785	157	IEEE 802.11a	OFDM	9.5	8.92	0.15	0 mm	FCC #7	6	back	1:1	0.479	1.143	0.547	
5825	165	IEEE 802.11a	OFDM	9.5	8.72	0.00	0 mm	FCC #7	6	back	1:1	0.486	1.197	0.582	
5775	155	IEEE 802.11ac	OFDM	9.5	8.58	-0.09	0 mm	FCC #7	29.3	back	1:1	0.470	1.236	0.581	
5785	157	IEEE 802.11a	OFDM	9.5	8.92	0.10	0 mm	FCC #7	6	top	1:1	0.102	1.143	0.117	
5785	157	IEEE 802.11a	OFDM	9.5	8.92	0.13	0 mm	FCC #7	6	left	1:1	0.021	1.143	0.024	
ANSI / IEEE C95.1 1992 - SAFETY LIMIT Spatial Peak Uncontrolled Exposure/General Population							Body 1.6 W/kg (mW/g) averaged over 1 gram								

Table 10-9
Antenna 2 NII Body SAR

MEASUREMENT RESULTS															
FREQUENCY		Mode	Service	Maximum Allowed Power [dBm]	Conducted Power [dBm]	Power Drift [dB]	Spacing	Device Serial Number	Data Rate (Mbps)	Side	Duty Cycle	SAR (1g)	Scaling Factor	Scaled SAR (1g)	Plot #
MHz	Ch.											(W/kg)		(W/kg)	
5200	40	IEEE 802.11a	OFDM	9.5	8.89	-0.17	0 mm	FCC #7	6	back	1:1	0.486	1.151	0.559	
5240	48	IEEE 802.11a	OFDM	9.5	9.09	-0.03	0 mm	FCC #7	6	back	1:1	0.443	1.099	0.487	
5210	42	IEEE 802.11ac	OFDM	9.5	8.51	-0.02	0 mm	FCC #7	29.3	back	1:1	0.462	1.256	0.580	
5240	48	IEEE 802.11a	OFDM	9.5	9.09	-0.02	0 mm	FCC #7	6	top	1:1	0.143	1.099	0.157	
5240	48	IEEE 802.11a	OFDM	9.5	9.09	0.16	0 mm	FCC #7	6	left	1:1	0.022	1.099	0.024	
5280	56	IEEE 802.11a	OFDM	9.5	9.13	0.02	0 mm	FCC #7	6	back	1:1	0.442	1.089	0.481	
5320	64	IEEE 802.11a	OFDM	9.5	9.10	0.13	0 mm	FCC #7	6	back	1:1	0.478	1.096	0.524	
5290	58	IEEE 802.11ac	OFDM	9.5	8.62	0.02	0 mm	FCC #7	29.3	back	1:1	0.446	1.225	0.546	
5280	56	IEEE 802.11a	OFDM	9.5	9.13	0.17	0 mm	FCC #7	6	top	1:1	0.149	1.089	0.162	
5280	56	IEEE 802.11a	OFDM	9.5	9.13	0.14	0 mm	FCC #7	6	left	1:1	0.019	1.089	0.021	
5520	104	IEEE 802.11a	OFDM	9.5	9.20	0.15	0 mm	FCC #7	6	back	1:1	0.444	1.072	0.476	
5560	112	IEEE 802.11a	OFDM	9.5	8.97	0.04	0 mm	FCC #7	6	back	1:1	0.458	1.130	0.518	
5700	140	IEEE 802.11a	OFDM	9.5	8.83	0.03	0 mm	FCC #7	6	back	1:1	0.547	1.167	**0.638**	
5530	106	IEEE 802.11ac	OFDM	9.5	8.68	-0.04	0 mm	FCC #7	29.3	back	1:1	0.468	1.208	0.565	
5520	104	IEEE 802.11a	OFDM	9.5	9.20	-0.18	0 mm	FCC #7	6	top	1:1	0.120	1.072	0.129	
5520	104	IEEE 802.11a	OFDM	9.5	9.20	0.15	0 mm	FCC #7	6	left	1:1	0.021	1.072	0.023	
ANSI / IEEE C95.1 1992 - SAFETY LIMIT Spatial Peak Uncontrolled Exposure/General Population							Body 1.6 W/kg (mW/g) averaged over 1 gram								

© 2014 PCTEST Engineering Laboratory, Inc.

Table 10-10
MIMO DTS Body SAR

MEASUREMENT RESULTS															
FREQUENCY		Mode	Service	Maximum Allowed Power [dBm]	Conducted Power [dBm]	Power Drift [dB]	Spacing	Device Serial Number	Data Rate (Mbps)	Side	Duty Cycle	SAR (1g)	Scaling Factor	Scaled SAR (1g)	Plot #
MHz	Ch.											(W/kg)		(W/kg)	
2412	1	IEEE 802.11n	OFDM	17.5	16.58	-0.15	0 mm	FCC #7	13	back	1:1	0.420	1.236	0.519	
2437	6	IEEE 802.11n	OFDM	17.5	17.08	0.01	0 mm	FCC #7	13	back	1:1	0.538	1.102	**0.593**	A7
2462	11	IEEE 802.11n	OFDM	17.5	16.51	0.09	0 mm	FCC #7	13	back	1:1	0.467	1.256	0.587	
2437	6	IEEE 802.11n	OFDM	17.5	17.08	0.02	0 mm	FCC #7	13	top	1:1	0.210	1.102	0.231	
2437	6	IEEE 802.11n	OFDM	17.5	17.08	-0.09	0 mm	FCC #7	13	left	1:1	0.036	1.102	0.040	
5765	153	IEEE 802.11n	OFDM	12.0	10.94	0.07	0 mm	FCC #7	13	back	1:1	0.392	1.276	0.500	
5785	157	IEEE 802.11n	OFDM	12.0	10.95	0.05	0 mm	FCC #7	13	back	1:1	0.421	1.274	0.536	
5825	165	IEEE 802.11n	OFDM	12.0	11.09	0.02	0 mm	FCC #7	13	back	1:1	0.412	1.233	0.508	
5825	165	IEEE 802.11n	OFDM	12.0	11.09	-0.12	0 mm	FCC #7	13	top	1:1	0.098	1.233	0.121	
5825	165	IEEE 802.11n	OFDM	12.0	11.09	0.19	0 mm	FCC #7	13	left	1:1	0.026	1.233	0.032	
ANSI / IEEE C95.1 1992 - SAFETY LIMIT Spatial Peak Uncontrolled Exposure/General Population							Body 1.6 W/kg (mW/g) averaged over 1 gram								

Table 10-11
MIMO NII Body SAR

MEASUREMENT RESULTS															
FREQUENCY		Mode	Service	Maximum Allowed Power [dBm]	Conducted Power [dBm]	Power Drift [dB]	Spacing	Device Serial Number	Data Rate (Mbps)	Side	Duty Cycle	SAR (1g)	Scaling Factor	Scaled SAR (1g)	Plot #
MHz	Ch.											(W/kg)		(W/kg)	
5200	40	IEEE 802.11n	OFDM	12.0	11.07	0.04	0 mm	FCC #7	13	back	1:1	0.190	1.239	0.235	
5200	40	IEEE 802.11n	OFDM	12.0	11.07	0.07	0 mm	FCC #7	13	top	1:1	0.147	1.239	0.182	
5200	40	IEEE 802.11n	OFDM	12.0	11.07	-0.08	0 mm	FCC #7	13	left	1:1	0.029	1.239	0.036	
5280	56	IEEE 802.11n	OFDM	12.0	10.93	0.01	0 mm	FCC #7	13	back	1:1	0.189	1.279	0.242	
5280	56	IEEE 802.11n	OFDM	12.0	10.93	0.17	0 mm	FCC #7	13	top	1:1	0.126	1.279	0.161	
5280	56	IEEE 802.11n	OFDM	12.0	10.93	0.18	0 mm	FCC #7	13	left	1:1	0.027	1.279	0.035	
5540	108	IEEE 802.11n	OFDM	12.0	10.93	0.16	0 mm	FCC #7	13	back	1:1	0.296	1.279	0.379	
5580	116	IEEE 802.11n	OFDM	12.0	10.86	0.12	0 mm	FCC #7	13	back	1:1	0.302	1.300	0.393	
5660	132	IEEE 802.11n	OFDM	12.0	10.87	0.16	0 mm	FCC #7	13	back	1:1	0.398	1.297	0.516	
5540	108	IEEE 802.11n	OFDM	12.0	10.93	0.14	0 mm	FCC #7	13	top	1:1	0.127	1.279	0.162	
5540	108	IEEE 802.11n	OFDM	12.0	10.93	-0.17	0 mm	FCC #7	13	left	1:1	0.028	1.279	0.036	
ANSI / IEEE C95.1 1992 - SAFETY LIMIT Spatial Peak Uncontrolled Exposure/General Population							Body 1.6 W/kg (mW/g) averaged over 1 gram								

© 2014 PCTEST Engineering Laboratory, Inc.

Table 10-12
Bluetooth Body SAR

MEASUREMENT RESULTS															
FREQUENCY		Mode	Service	Maximum Allowed Power [dBm]	Conducted Power [dBm]	Power Drift [dB]	Spacing	Device Serial Number	Data Rate (Mbps)	Side	Duty Cycle	SAR (1g)	Scaling Factor	Scaled SAR (1g)	Plot #
MHz	Ch.											(W/kg)		(W/kg)	
2480	78	Bluetooth	FHSS	11.5	11.35	-0.16	0 mm	FCC #7	1	back	1:1	0.001	1.035	**0.001**	A10
2480	78	Bluetooth	FHSS	11.5	11.35	0.17	0 mm	FCC #7	1	top	1:1	0.000	1.035	0.000	
2480	78	Bluetooth	FHSS	11.5	11.35	0.00	0 mm	FCC #7	1	left	1:1	0.000	1.035	0.000	
ANSI / IEEE C95.1 1992 - SAFETY LIMIT Spatial Peak Uncontrolled Exposure/General Population							**Body 1.6 W/kg (mW/g)** averaged over 1 gram								

10.2 SAR Test Notes

General Notes:

1. The test data reported are the worst-case SAR values according to test procedures specified in FCC KDB Publication 616217 D04v01r01, and FCC KDB Publication 447498 D01v05.
2. Batteries are fully charged at the beginning of the SAR measurements
3. Liquid tissue depth was at least 15.0 cm for all frequencies.
4. The manufacturer has confirmed that the device(s) tested have the same physical, mechanical and thermal characteristics and are within operational tolerances expected for production units.
5. SAR results were scaled to the maximum allowed power to demonstrate compliance per FCC KDB Publication 447498 D01v05.
6. Per FCC KDB 865664 D01 v01, variability SAR tests were performed when the measured SAR results for a frequency band were greater than 0.8 W/kg. Repeated SAR measurements are highlighted in the tables above for clarity. Please see Section 12 for variability analysis.
7. Per FCC KDB 616217 D04 Section 4.3, SAR tests are required for the back surface and edges of the tablet with the tablet touching the phantom. The SAR exclusion threshold in FCC KDB 447498 D01v05 was applied to determine SAR test exclusion for adjacent edge configurations. Top edge and right edge SAR tests were required for the main antenna. Left edge and top edge SAR tests were required for the WLAN/BT antenna.

CDMA Notes:

1. CDMA Body SAR is measured using Subtype 0/1 Physical Layer configurations for Rev. 0 according to KDB 941225 D01 procedures for data devices. Since the average output power of Subtype 2 for Rev. A is less than the Rev. 0 power levels, EVDO Rev. A SAR is not required. SAR is not required for 1x RTT for Ev-Do hotspot devices when the maximum average output of each channel is less than ¼ dB higher than that measured in Subtype 0/1 Physical Layer configurations for Rev. 0.
2. Per FCC KDB Publication 447498 D01v05, if the reported (scaled) SAR measured at the middle channel or highest output power channel for each test configuration is ≤ 0.8 W/kg then testing at the other channels is not required for such test configuration(s). When the maximum output power variation across the required test channels is > ½ dB, instead of the middle channel, the highest output power channel was used.

© 2014 PCTEST Engineering Laboratory, Inc.

LTE Notes:

1. LTE Considerations: LTE test configurations are determined according to SAR Evaluation Considerations for LTE Devices in FCC KDB Publication 941225 D05v02r01. The general test procedures used for testing can be found in Section 7.4.4.
2. MPR is permanently implemented for this device by the manufacturer. The specific manufacturer target MPR is indicated alongside the SAR results. MPR is enabled for this device, according to 3GPP TS36.101 Section 6.2.3 – 6.2.5 under Table 6.2.3-1.
3. A-MPR was disabled for all SAR tests by setting NS=01 on the base station simulator. SAR tests were performed with the same number of RB and RB offsets transmitting on all TTI frames (maximum TTI).

WLAN Notes:

1. Justification for reduced test configurations for WIFI channels per KDB Publication 248227 D01v01r02 and October 2012 FCC/TCB Meeting Notes for 2.4 GHz WIFI: Highest average RF output power channel for the lowest data rate was selected for SAR evaluation in 802.11b. Other SISO IEEE 802.11 modes (including 802.11g/n) were not investigated since the average output powers over all channels and data rates were not more than 0.25 dB higher than the tested channel in the lowest data rate of SISO IEEE 802.11b mode.
2. Justification for reduced test configurations for WIFI channels per KDB Publication 248227 D01v01r02 and October 2012 FCC/TCB Meeting Notes for 5 GHz WIFI: Highest average RF output power channel for the lowest data rate was selected for SAR evaluation in 802.11a. Other SISO IEEE 802.11 modes (including 802.11n) were not investigated since the average output powers over all channels and data rates were not more than 0.25 dB higher than the tested channel in the lowest data rate of SISO IEEE 802.11a mode.
3. Per KDB 248227, SAR for MIMO was measured with both transmitting simultaneously and was evaluated in dependently of SISO operation. For 2.4 GHz MIMO, 802.11n was evaluated. For 5 GHz MIMO, 802.11n 20 MHz BW was evaluated.
4. Per April 2013 TCB Workshop notes, full SAR tests for SISO IEEE 802.11ac configurations were not required because the average output power was not more than 0.25 dB higher than IEEE 802.11a mode. IEEE 802.11ac was evaluated for the highest IEEE 802.11a position in each 5 GHz band and exposure condition.
5. WIFI transmission was verified using an uncalibrated spectrum analyzer.
6. When the maximum extrapolated peak SAR of the zoom scan for the maximum output channel is >1.6 W/kg or the reported 1g averaged SAR is >0.8 W/kg, SAR testing on other default channels was required.
7. There is no proximity sensor power reduction mechanism applied for WIFI/BT modes.

© 2014 PCTEST Engineering Laboratory, Inc.

11 FCC MULTI-TX AND ANTENNA SAR CONSIDERATIONS

11.1 Introduction

The following procedures adopted from FCC KDB Publication 447498 D01v05 are applicable to handsets with built-in unlicensed transmitters such as 802.11a/b/g/n/ac and Bluetooth devices which may simultaneously transmit with the licensed transmitter.

11.2 Simultaneous Transmission Procedures

This device contains transmitters that may operate simultaneously. Therefore simultaneous transmission analysis is required. Per FCC KDB 447498 D01v05 IV.C.1.iii and IEEE 1528-2013 Section 6.3.4.1.2, simultaneous transmission SAR test exclusion may be applied when the sum of the 1-g SAR for all the simultaneous transmitting antennas in a specific a physical test configuration is ≤1.6 W/kg. When standalone SAR is not required to be measured, per FCC KDB 447498 D01v05 4.3.2 2), the following equation must be used to estimate the standalone 1g SAR for simultaneous transmission assessment involving that transmitter.

$$\text{Estimated SAR} = \frac{\sqrt{f(GHz)}}{7.5} * \frac{(\text{Max Power of channel, mW})}{\text{Min. Separation Distance, mm}}$$

Table 11-1
Estimated SAR

Mode	Frequency	Maximum Allowed Power	Separation Distance (Body)	Estimated SAR (Body)
	[MHz]	[dBm]	[mm]	[W/kg]
Bluetooth LE	2480	9.00	5	**0.336**
Bluetooth LE	2480	9.00	19	**0.088**
Bluetooth LE	2480	9.00	21	**0.080**

Note:

1. Per FCC KDB 447498, when the test separation distance is <5 mm, a distance of 5 mm is applied to determine estimated SAR.
2. Per KDB Publication 447498 D01v05, the maximum power of the channel was rounded to the nearest mW before calculation.
3. High channel frequency was used for calculation to ensure worst case SAR.
4. When the test separation distance was > 50 mm, an estimated SAR of 0.4 W/kg was used to determine simultaneous transmission SAR exclusion, for configurations excluded per FCC KDB Publication 447498 D01v05. When the test separation distance was < 50 mm, an estimated SAR was determined per FCC KDB Publication 447498 D01v05.

© 2014 PCTEST Engineering Laboratory, Inc.

11.3 Body SAR Simultaneous Transmission Analysis

Table 11-2
Simultaneous Transmission Scenario (2.4 GHz Ant 1 Body at 0.0 cm)

Simult Tx	Configuration	Cell. EVDO SAR (W/kg)	2.4 GHz WLAN Ant 1 SAR (W/kg)	Σ SAR (W/kg)	SPLSR	Simult Tx	Configuration	PCS EVDO SAR (W/kg)	2.4 GHz WLAN Ant 1 SAR (W/kg)	Σ SAR (W/kg)	SPLSR
Body SAR	Back	0.356	0.585	**0.941**	N/A	Body SAR	Back	0.398	0.585	**0.983**	N/A
	Top	0.119	0.189	0.308	N/A		Top	0.388	0.189	0.577	N/A
	Bottom	0.400	0.400	0.800	N/A		Bottom	0.400	0.400	0.800	N/A
	Right	0.370	0.400	0.770	N/A		Right	0.148	0.400	0.548	N/A
	Left	0.400	0.029	0.429	N/A		Left	0.400	0.029	0.429	N/A
Simult Tx	Configuration	LTE Band 12 SAR (W/kg)	2.4 GHz WLAN Ant 1 SAR (W/kg)	Σ SAR (W/kg)	SPLSR	Simult Tx	Configuration	LTE Band 5 (Cell) SAR (W/kg)	2.4 GHz WLAN Ant 1 SAR (W/kg)	Σ SAR (W/kg)	SPLSR
Body SAR	Back	0.001	0.585	0.586	N/A	Body SAR	Back	0.073	0.585	0.658	N/A
	Top	0.001	0.189	0.190	N/A		Top	0.195	0.189	0.384	N/A
	Bottom	0.400	0.400	**0.800**	N/A		Bottom	0.400	0.400	**0.800**	N/A
	Right	0.341	0.400	0.741	N/A		Right	0.319	0.400	0.719	N/A
	Left	0.400	0.029	0.429	N/A		Left	0.400	0.029	0.429	N/A
Simult Tx	Configuration	LTE Band 4 (AWS) SAR (W/kg)	2.4 GHz WLAN Ant 1 SAR (W/kg)	Σ SAR (W/kg)	SPLSR	Simult Tx	Configuration	LTE Band 2 (PCS) SAR (W/kg)	2.4 GHz WLAN Ant 1 SAR (W/kg)	Σ SAR (W/kg)	SPLSR
Body SAR	Back	0.033	0.585	0.618	N/A	Body SAR	Back	1.097	0.585	See Note 1	0.01
	Top	0.024	0.189	0.213	N/A		Top	0.331	0.189	0.520	N/A
	Bottom	0.400	0.400	**0.800**	N/A		Bottom	0.400	0.400	**0.800**	N/A
	Right	0.237	0.400	0.637	N/A		Right	0.185	0.400	0.585	N/A
	Left	0.400	0.029	0.429	N/A		Left	0.400	0.029	0.429	N/A

Table 11-3
Simultaneous Transmission Scenario (2.4 GHz Ant 2 Body at 0.0 cm)

Simult Tx	Configuration	Cell. EVDO SAR (W/kg)	2.4 GHz WLAN Ant 2 SAR (W/kg)	Σ SAR (W/kg)	SPLSR	Simult Tx	Configuration	PCS EVDO SAR (W/kg)	2.4 GHz WLAN Ant 2 SAR (W/kg)	Σ SAR (W/kg)	SPLSR
Body SAR	Back	0.356	0.424	0.780	N/A	Body SAR	Back	0.398	0.424	**0.822**	N/A
	Top	0.119	0.132	0.251	N/A		Top	0.388	0.132	0.520	N/A
	Bottom	0.400	0.400	**0.800**	N/A		Bottom	0.400	0.400	0.800	N/A
	Right	0.370	0.400	0.770	N/A		Right	0.148	0.400	0.548	N/A
	Left	0.400	0.003	0.403	N/A		Left	0.400	0.003	0.403	N/A
Simult Tx	Configuration	LTE Band 12 SAR (W/kg)	2.4 GHz WLAN Ant 2 SAR (W/kg)	Σ SAR (W/kg)	SPLSR	Simult Tx	Configuration	LTE Band 5 (Cell) SAR (W/kg)	2.4 GHz WLAN Ant 2 SAR (W/kg)	Σ SAR (W/kg)	SPLSR
Body SAR	Back	0.001	0.424	0.425	N/A	Body SAR	Back	0.073	0.424	0.497	N/A
	Top	0.001	0.132	0.133	N/A		Top	0.195	0.132	0.327	N/A
	Bottom	0.400	0.400	**0.800**	N/A		Bottom	0.400	0.400	**0.800**	N/A
	Right	0.341	0.400	0.741	N/A		Right	0.319	0.400	0.719	N/A
	Left	0.400	0.003	0.403	N/A		Left	0.400	0.003	0.403	N/A
Simult Tx	Configuration	LTE Band 4 (AWS) SAR (W/kg)	2.4 GHz WLAN Ant 2 SAR (W/kg)	Σ SAR (W/kg)	SPLSR	Simult Tx	Configuration	LTE Band 2 (PCS) SAR (W/kg)	2.4 GHz WLAN Ant 2 SAR (W/kg)	Σ SAR (W/kg)	SPLSR
Body SAR	Back	0.033	0.424	0.457	N/A	Body SAR	Back	1.097	0.424	**1.521**	N/A
	Top	0.024	0.132	0.156	N/A		Top	0.331	0.132	0.463	N/A
	Bottom	0.400	0.400	**0.800**	N/A		Bottom	0.400	0.400	0.800	N/A
	Right	0.237	0.400	0.637	N/A		Right	0.185	0.400	0.585	N/A
	Left	0.400	0.003	0.403	N/A		Left	0.400	0.003	0.403	N/A

© 2014 PCTEST Engineering Laboratory, Inc.

Table 11-4
Simultaneous Transmission Scenario (2.4 GHz MIMO Body at 0.0 cm)

Simult Tx	Configuration	Cell. EVDO SAR (W/kg)	2.4 GHz WLAN MIMO SAR (W/kg)	Σ SAR (W/kg)	SPLSR	Simult Tx	Configuration	PCS EVDO SAR (W/kg)	2.4 GHz WLAN MIMO SAR (W/kg)	Σ SAR (W/kg)	SPLSR
Body SAR	Back	0.356	0.593	**0.949**	N/A	Body SAR	Back	0.398	0.593	**0.991**	N/A
	Top	0.119	0.231	0.350	N/A		Top	0.388	0.231	0.619	N/A
	Bottom	0.400	0.400	0.800	N/A		Bottom	0.400	0.400	0.800	N/A
	Right	0.370	0.400	0.770	N/A		Right	0.148	0.400	0.548	N/A
	Left	0.400	0.040	0.440	N/A		Left	0.400	0.040	0.440	N/A
Simult Tx	Configuration	LTE Band 12 SAR (W/kg)	2.4 GHz WLAN MIMO SAR (W/kg)	Σ SAR (W/kg)	SPLSR	Simult Tx	Configuration	LTE Band 5 (Cell) SAR (W/kg)	2.4 GHz WLAN MIMO SAR (W/kg)	Σ SAR (W/kg)	SPLSR
Body SAR	Back	0.001	0.593	0.594	N/A	Body SAR	Back	0.073	0.593	0.666	N/A
	Top	0.001	0.231	0.232	N/A		Top	0.195	0.231	0.426	N/A
	Bottom	0.400	0.400	**0.800**	N/A		Bottom	0.400	0.400	**0.800**	N/A
	Right	0.341	0.400	0.741	N/A		Right	0.319	0.400	0.719	N/A
	Left	0.400	0.040	0.440	N/A		Left	0.400	0.040	0.440	N/A
Simult Tx	Configuration	LTE Band 4 (AWS) SAR (W/kg)	2.4 GHz WLAN MIMO SAR (W/kg)	Σ SAR (W/kg)	SPLSR	Simult Tx	Configuration	LTE Band 2 (PCS) SAR (W/kg)	2.4 GHz WLAN MIMO SAR (W/kg)	Σ SAR (W/kg)	SPLSR
Body SAR	Back	0.033	0.593	0.626	N/A	Body SAR	Back	1.097	0.593	See Note 1	0.02
	Top	0.024	0.231	0.255	N/A		Top	0.331	0.231	0.562	N/A
	Bottom	0.400	0.400	**0.800**	N/A		Bottom	0.400	0.400	**0.800**	N/A
	Right	0.237	0.400	0.637	N/A		Right	0.185	0.400	0.585	N/A
	Left	0.400	0.040	0.440	N/A		Left	0.400	0.040	0.440	N/A

Table 11-5
Simultaneous Transmission Scenario (5 GHz Body Ant 1 at 0.0 cm)

Simult Tx	Configuration	Cell. EVDO SAR (W/kg)	5 GHz WLAN Ant 1 SAR (W/kg)	Σ SAR (W/kg)	SPLSR	Simult Tx	Configuration	PCS EVDO SAR (W/kg)	5 GHz WLAN Ant 1 SAR (W/kg)	Σ SAR (W/kg)	SPLSR
Body SAR	Back	0.356	0.778	**1.134**	N/A	Body SAR	Back	0.398	0.778	**1.176**	N/A
	Top	0.119	0.045	0.164	N/A		Top	0.388	0.045	0.433	N/A
	Bottom	0.400	0.400	0.800	N/A		Bottom	0.400	0.400	0.800	N/A
	Right	0.370	0.400	0.770	N/A		Right	0.148	0.400	0.548	N/A
	Left	0.400	0.027	0.427	N/A		Left	0.400	0.027	0.427	N/A
Simult Tx	Configuration	LTE Band 12 SAR (W/kg)	5 GHz WLAN Ant 1 SAR (W/kg)	Σ SAR (W/kg)	SPLSR	Simult Tx	Configuration	LTE Band 5 (Cell) SAR (W/kg)	5 GHz WLAN Ant 1 SAR (W/kg)	Σ SAR (W/kg)	SPLSR
Body SAR	Back	0.001	0.778	0.779	N/A	Body SAR	Back	0.073	0.778	**0.851**	N/A
	Top	0.001	0.045	0.046	N/A		Top	0.195	0.045	0.240	N/A
	Bottom	0.400	0.400	**0.800**	N/A		Bottom	0.400	0.400	0.800	N/A
	Right	0.341	0.400	0.741	N/A		Right	0.319	0.400	0.719	N/A
	Left	0.400	0.027	0.427	N/A		Left	0.400	0.027	0.427	N/A
Simult Tx	Configuration	LTE Band 4 (AWS) SAR (W/kg)	5 GHz WLAN Ant 1 SAR (W/kg)	Σ SAR (W/kg)	SPLSR	Simult Tx	Configuration	LTE Band 2 (PCS) SAR (W/kg)	5 GHz WLAN Ant 1 SAR (W/kg)	Σ SAR (W/kg)	SPLSR
Body SAR	Back	0.033	0.778	**0.811**	N/A	Body SAR	Back	1.097	0.778	See Note 1	0.02
	Top	0.024	0.045	0.069	N/A		Top	0.331	0.045	0.376	N/A
	Bottom	0.400	0.400	0.800	N/A		Bottom	0.400	0.400	**0.800**	N/A
	Right	0.237	0.400	0.637	N/A		Right	0.185	0.400	0.585	N/A
	Left	0.400	0.027	0.427	N/A		Left	0.400	0.027	0.427	N/A

© 2014 PCTEST Engineering Laboratory, Inc.

Table 11-6
Simultaneous Transmission Scenario (5 GHz Body Ant 2 at 0.0 cm)

Simult Tx	Configuration	Cell. EVDO SAR (W/kg)	5 GHz WLAN Ant 2 SAR (W/kg)	Σ SAR (W/kg)	SPLSR	Simult Tx	Configuration	PCS EVDO SAR (W/kg)	5 GHz WLAN Ant 2 SAR (W/kg)	Σ SAR (W/kg)	SPLSR
Body SAR	Back	0.356	0.638	**0.994**	N/A	Body SAR	Back	0.398	0.638	**1.036**	N/A
	Top	0.119	0.162	0.281	N/A		Top	0.388	0.162	0.550	N/A
	Bottom	0.400	0.400	0.800	N/A		Bottom	0.400	0.400	0.800	N/A
	Right	0.370	0.400	0.770	N/A		Right	0.148	0.400	0.548	N/A
	Left	0.400	0.024	0.424	N/A		Left	0.400	0.024	0.424	N/A
Simult Tx	Configuration	LTE Band 12 SAR (W/kg)	5 GHz WLAN Ant 2 SAR (W/kg)	Σ SAR (W/kg)	SPLSR	Simult Tx	Configuration	LTE Band 5 (Cell) SAR (W/kg)	5 GHz WLAN Ant 2 SAR (W/kg)	Σ SAR (W/kg)	SPLSR
Body SAR	Back	0.001	0.638	0.639	N/A	Body SAR	Back	0.073	0.638	0.711	N/A
	Top	0.001	0.162	0.163	N/A		Top	0.195	0.162	0.357	N/A
	Bottom	0.400	0.400	**0.800**	N/A		Bottom	0.400	0.400	**0.800**	N/A
	Right	0.341	0.400	0.741	N/A		Right	0.319	0.400	0.719	N/A
	Left	0.400	0.024	0.424	N/A		Left	0.400	0.024	0.424	N/A
Simult Tx	Configuration	LTE Band 4 (AWS) SAR (W/kg)	5 GHz WLAN Ant 2 SAR (W/kg)	Σ SAR (W/kg)	SPLSR	Simult Tx	Configuration	LTE Band 2 (PCS) SAR (W/kg)	5 GHz WLAN Ant 2 SAR (W/kg)	Σ SAR (W/kg)	SPLSR
Body SAR	Back	0.033	0.638	0.671	N/A	Body SAR	Back	1.097	0.638	See Note 1	0.02
	Top	0.024	0.162	0.186	N/A		Top	0.331	0.162	0.493	N/A
	Bottom	0.400	0.400	**0.800**	N/A		Bottom	0.400	0.400	**0.800**	N/A
	Right	0.237	0.400	0.637	N/A		Right	0.185	0.400	0.585	N/A
	Left	0.400	0.024	0.424	N/A		Left	0.400	0.024	0.424	N/A

Table 11-7
Simultaneous Transmission Scenario (5 GHz Body Ant MIMO at 0.0 cm)

Simult Tx	Configuration	Cell. EVDO SAR (W/kg)	5 GHz WLAN MIMO SAR (W/kg)	Σ SAR (W/kg)	SPLSR	Simult Tx	Configuration	PCS EVDO SAR (W/kg)	5 GHz WLAN MIMO SAR (W/kg)	Σ SAR (W/kg)	SPLSR
Body SAR	Back	0.356	0.536	**0.892**	N/A	Body SAR	Back	0.398	0.536	**0.934**	N/A
	Top	0.119	0.182	0.301	N/A		Top	0.388	0.182	0.570	N/A
	Bottom	0.400	0.400	0.800	N/A		Bottom	0.400	0.400	0.800	N/A
	Right	0.370	0.400	0.770	N/A		Right	0.148	0.400	0.548	N/A
	Left	0.400	0.036	0.436	N/A		Left	0.400	0.036	0.436	N/A
Simult Tx	Configuration	LTE Band 12 SAR (W/kg)	5 GHz WLAN MIMO SAR (W/kg)	Σ SAR (W/kg)	SPLSR	Simult Tx	Configuration	LTE Band 5 (Cell) SAR (W/kg)	5 GHz WLAN MIMO SAR (W/kg)	Σ SAR (W/kg)	SPLSR
Body SAR	Back	0.001	0.536	0.537	N/A	Body SAR	Back	0.073	0.536	0.609	N/A
	Top	0.001	0.182	0.183	N/A		Top	0.195	0.182	0.377	N/A
	Bottom	0.400	0.400	**0.800**	N/A		Bottom	0.400	0.400	**0.800**	N/A
	Right	0.341	0.400	0.741	N/A		Right	0.319	0.400	0.719	N/A
	Left	0.400	0.036	0.436	N/A		Left	0.400	0.036	0.436	N/A
Simult Tx	Configuration	LTE Band 4 (AWS) SAR (W/kg)	5 GHz WLAN MIMO SAR (W/kg)	Σ SAR (W/kg)	SPLSR	Simult Tx	Configuration	LTE Band 2 (PCS) SAR (W/kg)	5 GHz WLAN MIMO SAR (W/kg)	Σ SAR (W/kg)	SPLSR
Body SAR	Back	0.033	0.536	0.569	N/A	Body SAR	Back	1.097	0.536	See Note 1	0.02
	Top	0.024	0.182	0.206	N/A		Top	0.331	0.182	0.513	N/A
	Bottom	0.400	0.400	**0.800**	N/A		Bottom	0.400	0.400	**0.800**	N/A
	Right	0.237	0.400	0.637	N/A		Right	0.185	0.400	0.585	N/A
	Left	0.400	0.036	0.436	N/A		Left	0.400	0.036	0.436	N/A

© 2014 PCTEST Engineering Laboratory, Inc.

Table 11-8
Simultaneous Transmission Scenario (Bluetooth Body at 0.0 cm)

Simult Tx	Configuration	Cell. EVDO SAR (W/kg)	Bluetooth SAR (W/kg)	Σ SAR (W/kg)	SPLSR	Simult Tx	Configuration	PCS EVDO SAR (W/kg)	Bluetooth SAR (W/kg)	Σ SAR (W/kg)	SPLSR
Body SAR	Back	0.356	0.336	0.692	N/A	Body SAR	Back	0.398	0.336	0.734	N/A
	Top	0.119	0.336	0.455	N/A		Top	0.388	0.336	0.724	N/A
	Bottom	0.400	0.400	**0.800**	N/A		Bottom	0.400	0.400	**0.800**	N/A
	Right	0.370	0.400	0.770	N/A		Right	0.148	0.400	0.548	N/A
	Left	0.400	0.336	0.736	N/A		Left	0.400	0.336	0.736	N/A
Simult Tx	Configuration	LTE Band 12 SAR (W/kg)	Bluetooth SAR (W/kg)	Σ SAR (W/kg)	SPLSR	Simult Tx	Configuration	LTE Band 5 (Cell) SAR (W/kg)	Bluetooth SAR (W/kg)	Σ SAR (W/kg)	SPLSR
Body SAR	Back	0.001	0.336	0.337	N/A	Body SAR	Back	0.073	0.336	0.409	N/A
	Top	0.001	0.336	0.337	N/A		Top	0.195	0.336	0.531	N/A
	Bottom	0.400	0.400	**0.800**	N/A		Bottom	0.400	0.400	**0.800**	N/A
	Right	0.341	0.400	0.741	N/A		Right	0.319	0.400	0.719	N/A
	Left	0.400	0.336	0.736	N/A		Left	0.400	0.336	0.736	N/A
Simult Tx	Configuration	LTE Band 4 (AWS) SAR (W/kg)	Bluetooth SAR (W/kg)	Σ SAR (W/kg)	SPLSR	Simult Tx	Configuration	LTE Band 2 (PCS) SAR (W/kg)	Bluetooth SAR (W/kg)	Σ SAR (W/kg)	SPLSR
Body SAR	Back	0.033	0.336	0.369	N/A	Body SAR	Back	1.097	0.336	**1.433**	N/A
	Top	0.024	0.336	0.360	N/A		Top	0.331	0.336	0.667	N/A
	Bottom	0.400	0.400	**0.800**	N/A		Bottom	0.400	0.400	0.800	N/A
	Right	0.237	0.400	0.637	N/A		Right	0.185	0.400	0.585	N/A
	Left	0.400	0.336	0.736	N/A		Left	0.400	0.336	0.736	N/A

Table 11-9
Simultaneous Transmission Scenario (2.4 GHz Body at 2.1 cm)

Configuration	Mode	CDMA/LTE SAR (W/kg)	2.4 GHz WLAN Ant 1 SAR	Σ SAR (W/kg)	SPLSR	Configuration	Mode	CDMA/LTE SAR (W/kg)	2.4 GHz WLAN Ant 2 SAR	Σ SAR (W/kg)	SPLSR
Back Side	Cell. CDMA	0.246	< 0.585	< 0.831	N/A	Back Side	Cell. CDMA	0.246	< 0.424	< 0.670	N/A
Back Side	PCS CDMA	0.717	< 0.585	< 1.302	N/A	Back Side	PCS CDMA	0.717	< 0.424	< 1.141	N/A
Back Side	LTE Band 12	0.066	< 0.585	< 0.651	N/A	Back Side	LTE Band 12	0.066	< 0.424	< 0.490	N/A
Back Side	LTE Band 5 (Cell)	0.061	< 0.585	< 0.646	N/A	Back Side	LTE Band 5 (Cell)	0.061	< 0.424	< 0.485	N/A
Back Side	LTE Band 4 (AWS)	0.067	< 0.585	< 0.652	N/A	Back Side	LTE Band 4 (AWS)	0.067	< 0.424	< 0.491	N/A
Back Side	LTE Band 2 (PCS)	1.009	< 0.585	< 1.594	N/A	Back Side	LTE Band 2 (PCS)	1.009	< 0.424	< 1.433	N/A

Configuration	Mode	CDMA/LTE SAR (W/kg)	2.4 GHz WLAN MIMO SAR	Σ SAR (W/kg)	SPLSR
Back Side	Cell. CDMA	0.246	< 0.593	< 0.839	N/A
Back Side	PCS CDMA	0.717	< 0.593	< 1.310	N/A
Back Side	LTE Band 12	0.066	< 0.593	< 0.659	N/A
Back Side	LTE Band 5 (Cell)	0.061	< 0.593	< 0.654	N/A
Back Side	LTE Band 4 (AWS)	0.067	< 0.593	< 0.660	N/A
Back Side	LTE Band 2 (PCS)	1.009	< 0.593	See Note 1	< 0.01

Table 11-10
Simultaneous Transmission Scenario (5 GHz Body at 2.1 cm)

Configuration	Mode	CDMA/LTE SAR (W/kg)	5 GHz WLAN Ant 1 SAR	Σ SAR (W/kg)	SPLSR	Configuration	Mode	CDMA/LTE SAR (W/kg)	5 GHz WLAN Ant 2 SAR	Σ SAR (W/kg)	SPLSR
Back Side	Cell. CDMA	0.246	< 0.778	< 1.024	N/A	Back Side	Cell. CDMA	0.246	< 0.638	< 0.884	N/A
Back Side	PCS CDMA	0.717	< 0.778	< 1.495	N/A	Back Side	PCS CDMA	0.717	< 0.638	< 1.355	N/A
Back Side	LTE Band 12	0.066	< 0.778	< 0.844	N/A	Back Side	LTE Band 12	0.066	< 0.638	< 0.704	N/A
Back Side	LTE Band 5 (Cell)	0.061	< 0.778	< 0.839	N/A	Back Side	LTE Band 5 (Cell)	0.061	< 0.638	< 0.699	N/A
Back Side	LTE Band 4 (AWS)	0.067	< 0.778	< 0.845	N/A	Back Side	LTE Band 4 (AWS)	0.067	< 0.638	< 0.705	N/A
Back Side	LTE Band 2 (PCS)	1.009	< 0.778	See Note 1	< 0.02	Back Side	LTE Band 2 (PCS)	1.009	< 0.638	See Note 1	< 0.02

Configuration	Mode	CDMA/LTE SAR (W/kg)	5 GHz WLAN MIMO SAR	Σ SAR (W/kg)	SPLSR
Back Side	Cell. CDMA	0.246	< 0.536	< 0.782	N/A
Back Side	PCS CDMA	0.717	< 0.536	< 1.253	N/A
Back Side	LTE Band 12	0.066	< 0.536	< 0.602	N/A
Back Side	LTE Band 5 (Cell)	0.061	< 0.536	< 0.597	N/A
Back Side	LTE Band 4 (AWS)	0.067	< 0.536	< 0.603	N/A
Back Side	LTE Band 2 (PCS)	1.009	< 0.536	< 1.545	N/A

© 2014 PCTEST Engineering Laboratory, Inc.

Table 11-11
Simultaneous Transmission Scenario (Bluetooth Body at 2.1 cm)

Configuration	Mode	CDMA/LTE SAR (W/kg)	Bluetooth SAR (W/kg)	Σ SAR (W/kg)	SPLSR
Back Side	Cell. CDMA	0.246	0.080	0.326	N/A
Back Side	PCS CDMA	0.717	0.080	0.797	N/A
Back Side	LTE Band 12	0.066	0.080	0.146	N/A
Back Side	LTE Band 5 (Cell)	0.061	0.080	0.141	N/A
Back Side	LTE Band 4 (AWS)	0.067	0.080	0.147	N/A
Back Side	LTE Band 2 (PCS)	1.009	0.080	1.089	N/A

Table 11-12
Simultaneous Transmission Scenario (2.4 GHz Body at 1.9 cm)

Configuration	Mode	CDMA/LTE SAR (W/kg)	2.4 GHz WLAN Ant 1 SAR (W/kg)	Σ SAR (W/kg)	SPLSR	Configuration	Mode	CDMA/LTE SAR (W/kg)	2.4 GHz WLAN Ant 2 SAR (W/kg)	Σ SAR (W/kg)	SPLSR
Top Edge	Cell. CDMA	0.065	<0.189	<0.254	N/A	Top Edge	Cell. CDMA	0.065	<0.132	<0.197	N/A
Top Edge	PCS CDMA	0.741	<0.189	<0.930	N/A	Top Edge	PCS CDMA	0.741	<0.132	<0.873	N/A
Top Edge	LTE Band 12	0.033	<0.189	<0.222	N/A	Top Edge	LTE Band 12	0.033	<0.132	<0.165	N/A
Top Edge	LTE Band 5 (Cell)	0.046	<0.189	<0.235	N/A	Top Edge	LTE Band 5 (Cell)	0.046	<0.132	<0.178	N/A
Top Edge	LTE Band 4 (AWS)	0.095	<0.189	<0.284	N/A	Top Edge	LTE Band 4 (AWS)	0.095	<0.132	<0.227	N/A
Top Edge	LTE Band 2 (PCS)	1.097	<0.189	<1.286	N/A	Top Edge	LTE Band 2 (PCS)	1.097	<0.132	<1.229	N/A

Configuration	Mode	CDMA/LTE SAR (W/kg)	2.4 GHz WLAN MIMO SAR (W/kg)	Σ SAR (W/kg)	SPLSR
Top Edge	Cell. CDMA	0.065	<0.231	<0.296	N/A
Top Edge	PCS CDMA	0.741	<0.231	<0.972	N/A
Top Edge	LTE Band 12	0.033	<0.231	<0.264	N/A
Top Edge	LTE Band 5 (Cell)	0.046	<0.231	<0.277	N/A
Top Edge	LTE Band 4 (AWS)	0.095	<0.231	<0.326	N/A
Top Edge	LTE Band 2 (PCS)	1.097	<0.231	<1.328	N/A

Table 11-13
Simultaneous Transmission Scenario (5 GHz Body at 1.9 cm)

Configuration	Mode	CDMA/LTE SAR (W/kg)	5 GHz WLAN Ant 1 SAR (W/kg)	Σ SAR (W/kg)	SPLSR	Configuration	Mode	CDMA/LTE SAR (W/kg)	5 GHz WLAN Ant 2 SAR (W/kg)	Σ SAR (W/kg)	SPLSR
Top Edge	Cell. CDMA	0.065	<0.045	<0.110	N/A	Top Edge	Cell. CDMA	0.065	<0.162	<0.227	N/A
Top Edge	PCS CDMA	0.741	<0.045	<0.786	N/A	Top Edge	PCS CDMA	0.741	<0.162	<0.903	N/A
Top Edge	LTE Band 12	0.033	<0.045	<0.078	N/A	Top Edge	LTE Band 12	0.033	<0.162	<0.195	N/A
Top Edge	LTE Band 5 (Cell)	0.046	<0.045	<0.091	N/A	Top Edge	LTE Band 5 (Cell)	0.046	<0.162	<0.208	N/A
Top Edge	LTE Band 4 (AWS)	0.095	<0.045	<0.140	N/A	Top Edge	LTE Band 4 (AWS)	0.095	<0.162	<0.257	N/A
Top Edge	LTE Band 2 (PCS)	1.097	<0.045	<1.142	N/A	Top Edge	LTE Band 2 (PCS)	1.097	<0.162	<1.259	N/A

Configuration	Mode	CDMA/LTE SAR (W/kg)	5 GHz WLAN MIMO SAR (W/kg)	Σ SAR (W/kg)	SPLSR
Top Edge	Cell. CDMA	0.065	<0.182	<0.247	N/A
Top Edge	PCS CDMA	0.741	<0.182	<0.923	N/A
Top Edge	LTE Band 12	0.033	<0.182	<0.215	N/A
Top Edge	LTE Band 5 (Cell)	0.046	<0.182	<0.228	N/A
Top Edge	LTE Band 4 (AWS)	0.095	<0.182	<0.277	N/A
Top Edge	LTE Band 2 (PCS)	1.097	<0.182	<1.279	N/A

Table 11-14
Simultaneous Transmission Scenario (Bluetooth Body at 1.9 cm)

Configuration	Mode	CDMA/LTE SAR (W/kg)	Bluetooth SAR (W/kg)	Σ SAR (W/kg)	SPLSR
Top Edge	Cell. CDMA	0.065	0.088	0.153	N/A
Top Edge	PCS CDMA	0.741	0.088	0.829	N/A
Top Edge	LTE Band 12	0.033	0.088	0.121	N/A
Top Edge	LTE Band 5 (Cell)	0.046	0.088	0.134	N/A
Top Edge	LTE Band 4 (AWS)	0.095	0.088	0.183	N/A
Top Edge	LTE Band 2 (PCS)	1.097	0.088	1.185	N/A

© 2014 PCTEST Engineering Laboratory, Inc.

Notes:

1. No evaluation was performed to determine the aggregate 1g SAR for these configurations as the SPLS ratio between the antenna pairs was not higher than 0.04 per FCC KDB 447498 D01v05. See Section 11.4 for detailed SPLS ratio analysis.
2. When the test separation distance was > 50 mm, an estimated SAR of 0.4 W/kg was used to determine simultaneous transmission SAR exclusion, for configuration excluded per FCC KDB 447498 D01v05. Therefore, an estimated SAR of 0.4 W/kg for 2.4 GHz WLAN, 5 GHz WLAN, and Bluetooth was used to evaluate the simultaneous sums.
3. For body SAR summations for back side at 2.1 cm, and top at 1.9 cm, 2.4 GHz WLAN and 5 GHz WLAN SAR values for 0.0 cm were used since the 0.0 cm test distance for 2.4 GHz WLAN and 5 GHz WLAN were more conservative. "<" denotes that the 0.0 cm 2.4 GHz WLAN and 5 GHz WLAN SAR values were used for summation purposes.
4. The worst case 5 GHz WLAN reported SAR for each configuration was used for SAR summation, regardless of whether the WLAN channel has WIFI direct capability. Therefore, the summations above represent the absolute worst cases for simultaneous transmission with 5 GHz WLAN.
5. Estimated Bluetooth LE SAR results were used in the above tables to determine simultaneous transmission SAR test exclusion since they were more conservative then the reported Bluetooth SAR values.

11.4 SPLSR Evaluation and Analysis

Per FCC KDB Publication 447498 D01v05, when the sum of the standalone transmitters is more than 1.6 W/kg, the SAR sum to peak locations can be analyzed to determine SAR distribution overlaps. When the SAR peak to location ratio (shown below) for each pair of antennas is ≤ 0.04, simultaneous SAR evaluation is not required. The distance between the transmitters was calculated using the following formula.

$$\text{Distance}_{Tx1-Tx2} = R_i = \sqrt{(x_1 - x_2)^2 + (y_1 - y_2)^2}$$

$$\text{SPLS Ratio} = \frac{(SAR_1 + SAR_2)^{1.5}}{R_i}$$

© 2014 PCTEST Engineering Laboratory, Inc.

The sum of the standalone SAR values was above 1.6 W/kg for the Body back side configuration at a separation distance of 0 mm with LTE B2 antenna operating at limited output power with 2.4 GHz WLAN Antenna 1.

Table 11-15
Peak SAR Locations for Body Back Side at 0 mm

Mode/Band	x (mm)	y (mm)
LTE B2	-4.63	76.40
802.11b Ant 1	-31.20	-71.80

Figure 11-1
Peak SAR Locations

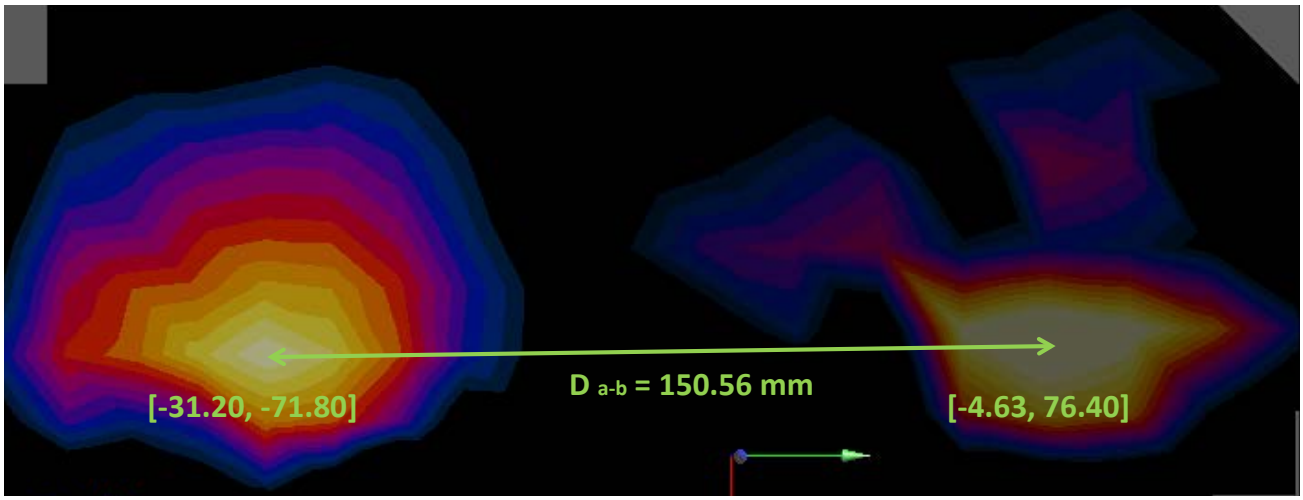

Table 11-16
SAR Sum to Peak Location Separation Ratio Calculation

Antenna Pair		Standalone 1g SAR (W/kg)		Standalone SAR Sum (W/kg)	Peak SAR Separation Distance (mm)	SPLS Ratio
Ant "a"	Ant "b"	a	b	a+b	D_{a-b}	$(a+b)^{1.5}/D_{a-b}$
LTE B2	802.11b Ant 1	1.097	0.585	1.682	150.56	0.01

© 2014 PCTEST Engineering Laboratory, Inc.

The sum of the standalone SAR values was above 1.6 W/kg for the Body back side configuration at a separation distance of 0 mm with LTE B2 antenna operating at limited output power with 2.4 GHz WLAN MIMO.

Table 11-17
Peak SAR Locations for Body Back Side at 0 mm

Mode/Band	x (mm)	y (mm)
LTE B2	-4.63	76.40
2.4 GHz 802.11n MIMO	-35.88	-60.58

Figure 11-2
Peak SAR Locations

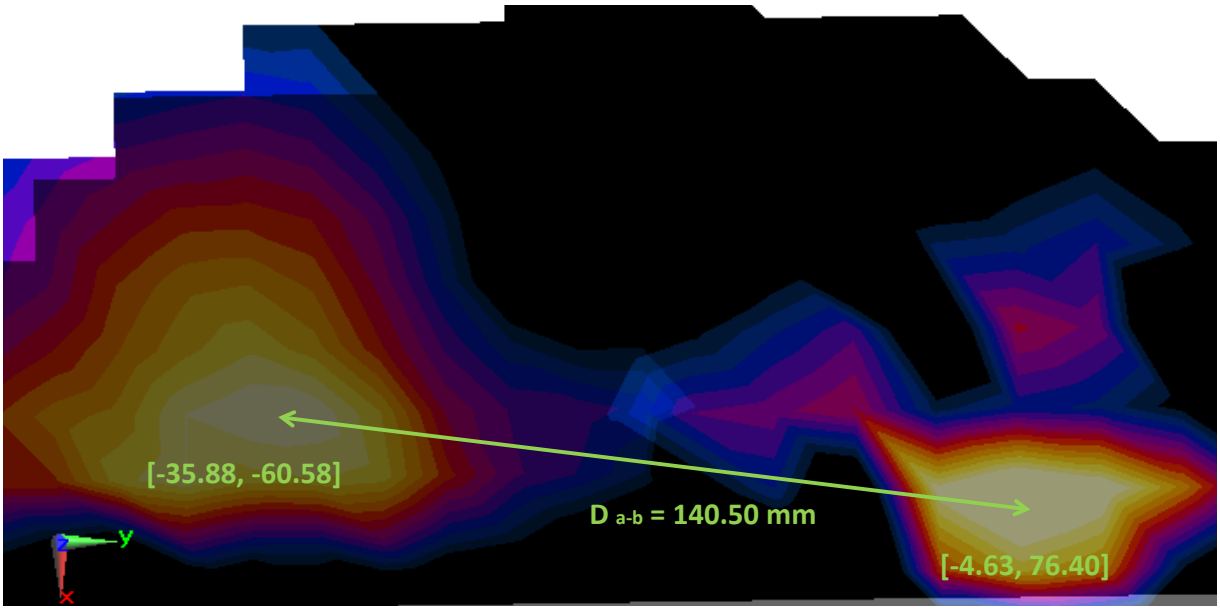

Table 11-18
SAR Sum to Peak Location Separation Ratio Calculation

Antenna Pair		Standalone 1g SAR (W/kg)		Standalone SAR Sum (W/kg)	Peak SAR Separation Distance (mm)	SPLS Ratio
Ant "a"	Ant "b"	a	b	a+b	D_{a-b}	$(a+b)^{1.5}/D_{a-b}$
LTE B2	2.4 GHz 802.11n MIMO	1.097	0.593	1.690	140.50	0.02

© 2014 PCTEST Engineering Laboratory, Inc.

The sum of the standalone SAR values was above 1.6 W/kg for the Body back side configuration at a separation distance of 0 mm with LTE B2 antenna operating at limited output power with 5 GHz WLAN Antenna 1.

Table 11-19
Peak SAR Locations for Body Back Side at 0 mm

Mode/Band	x (mm)	y (mm)
LTE B2	-4.63	76.40
802.11a Ant 1	-25.04	-72.99

Figure 11-3
Peak SAR Locations

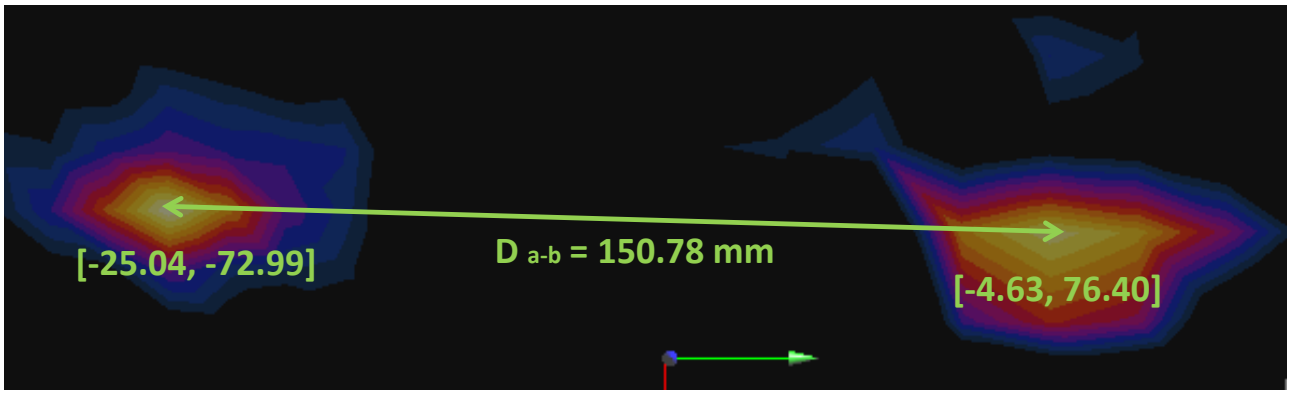

Table 11-20
SAR Sum to Peak Location Separation Ratio Calculation

Antenna Pair		Standalone 1g SAR (W/kg)		Standalone SAR Sum (W/kg)	Peak SAR Separation Distance (mm)	SPLS Ratio
Ant "a"	Ant "b"	a	b	a+b	D_{a-b}	$(a+b)^{1.5}/D_{a-b}$
LTE B2	802.11a Ant 1	1.097	0.778	1.875	150.78	0.02

© 2014 PCTEST Engineering Laboratory, Inc.

The sum of the standalone SAR values was above 1.6 W/kg for the Body back side configuration at a separation distance of 0 mm with LTE B2 antenna operating at limited output power with 5 GHz WLAN Antenna 2.

Table 11-21
Peak SAR Locations for Body Back Side at 0 mm

Mode/Band	x (mm)	y (mm)
LTE B2	-4.63	76.40
802.11a Ant 2	-24.03	-42.99

Figure 11-4
Peak SAR Locations

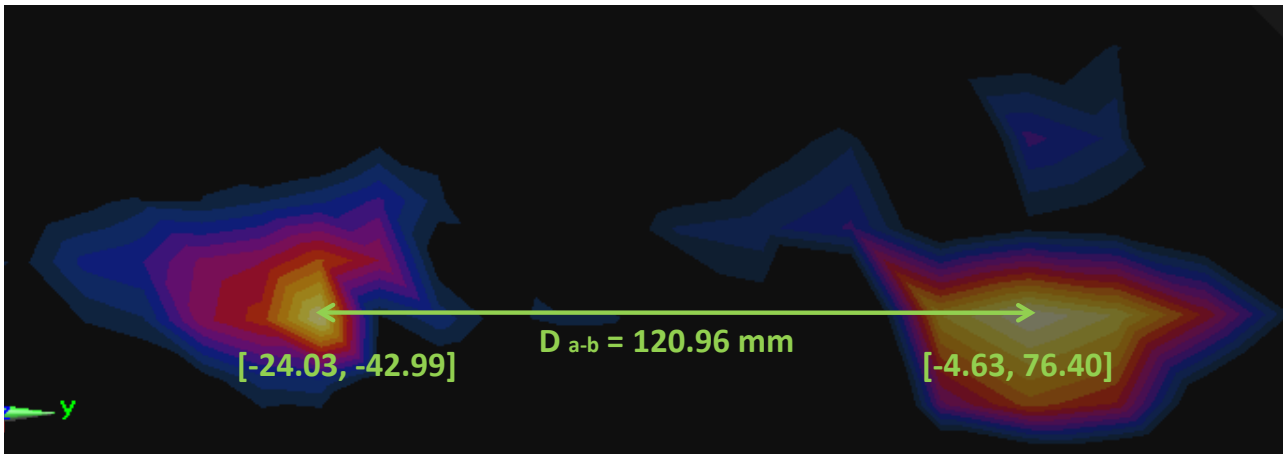

Table 11-22
SAR Sum to Peak Location Separation Ratio Calculation

Antenna Pair		Standalone 1g SAR (W/kg)		Standalone SAR Sum (W/kg)	Peak SAR Separation Distance (mm)	SPLS Ratio
Ant "a"	Ant "b"	a	b	a+b	D_{a-b}	$(a+b)^{1.5}/D_{a-b}$
LTE B2	802.11a Ant 2	1.097	0.638	1.735	120.96	0.02

© 2014 PCTEST Engineering Laboratory, Inc.

The sum of the standalone SAR values was above 1.6 W/kg for the Body back side configuration at a separation distance of 0 mm with LTE B2 antenna operating at limited output power with 5 GHz WLAN MIMO.

Table 11-23
Peak SAR Locations for Body Back Side at 0 mm

Mode/Band	x (mm)	y (mm)
LTE B2	-4.63	76.40
5 GHz 802.11n MIMO	-13.10	-46.80

Figure 11-5
Peak SAR Locations

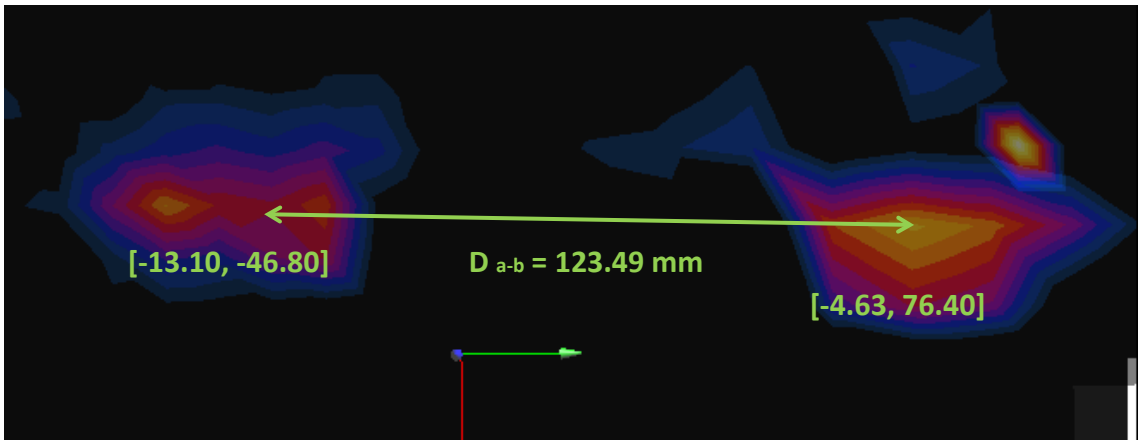

Table 11-24
SAR Sum to Peak Location Separation Ratio Calculation

Antenna Pair		Standalone 1g SAR (W/kg)		Standalone SAR Sum (W/kg)	Peak SAR Separation Distance (mm)	SPLS Ratio
Ant "a"	Ant "b"	a	b	a+b	D_{a-b}	$(a+b)^{1.5}/D_{a-b}$
LTE B2	5 GHz 802.11n MIMO	1.097	0.536	1.633	123.49	0.02

© 2014 PCTEST Engineering Laboratory, Inc.

The sum of the standalone SAR values was above 1.6 W/kg for the Body back side configuration at a separation distance of 21 mm with LTE B2 antenna operating at maximum output power with 2.4 GHz WLAN MIMO.

Table 11-25
Peak SAR Locations for Body Back Side at 21 mm

Mode/Band	x (mm)	y (mm)
LTE B2	-1.10	76.40
2.4 GHz 802.11n MIMO	-35.88	-60.58

Figure 11-6
Peak SAR Locations

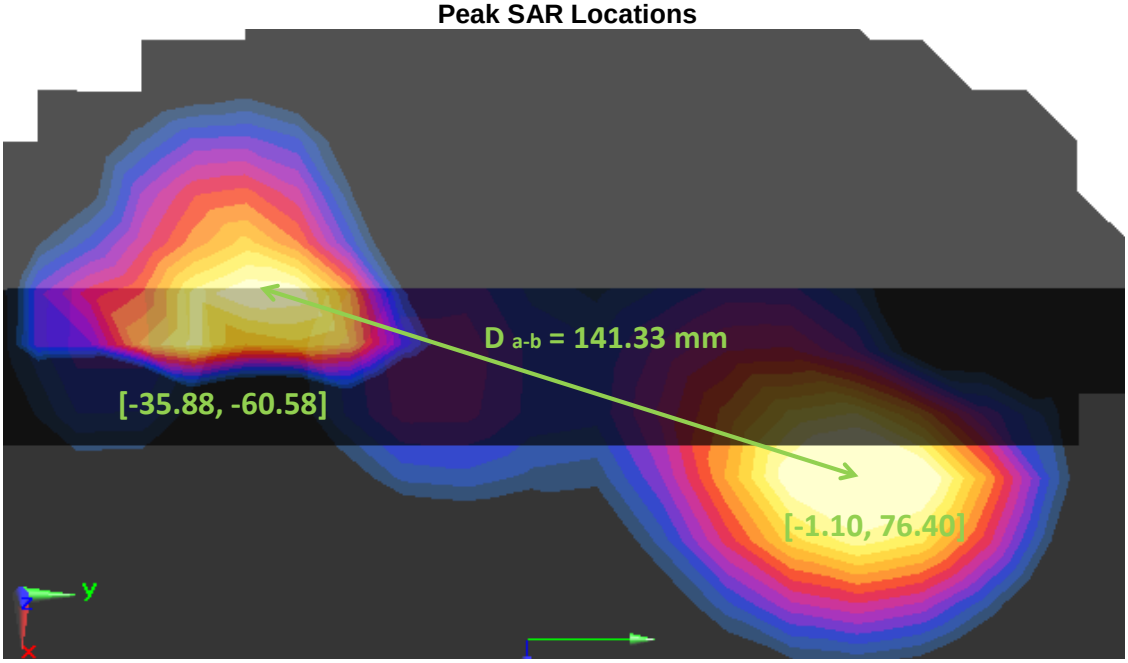

Table 11-26
SAR Sum to Peak Location Separation Ratio Calculation

Antenna Pair		Standalone 1g SAR (W/kg)		Standalone SAR Sum (W/kg)	Peak SAR Separation Distance (mm)	SPLS Ratio
Ant "a"	Ant "b"	a	b	a+b	D_{a-b}	$(a+b)^{1.5}/D_{a-b}$
LTE B2	2.4 GHz 802.11n MIMO	1.009	< 0.593	< 1.602	141.33	< 0.01

© 2014 PCTEST Engineering Laboratory, Inc.

The sum of the standalone SAR values was above 1.6 W/kg for the Body back side configuration at a separation distance of 21 mm with LTE B2 antenna operating at maximum output power with 5 GHz WLAN Antenna 1.

Table 11-27
Peak SAR Locations for Body Back Side at 21 mm

Mode/Band	x (mm)	y (mm)
LTE B2	-1.10	76.40
802.11a Ant 1	-25.04	-72.99

Figure 11-7
Peak SAR Locations

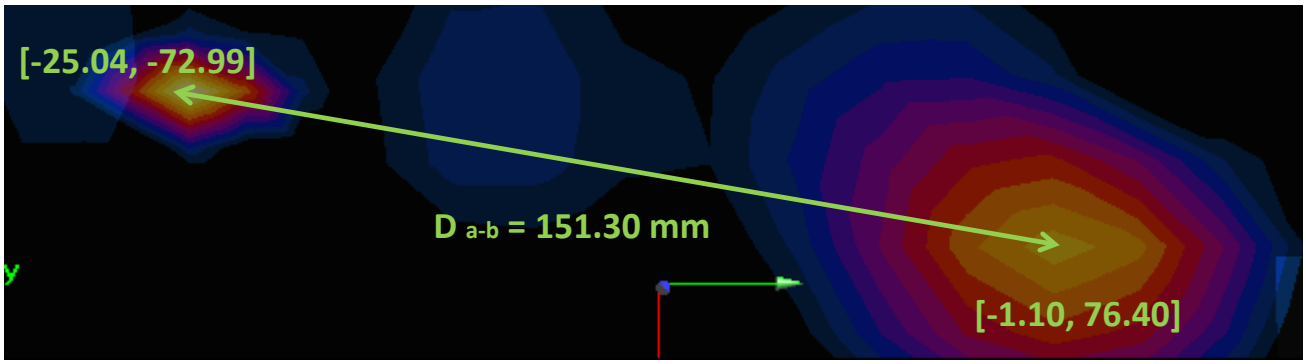

Table 11-28
SAR Sum to Peak Location Separation Ratio Calculation

Antenna Pair		Standalone 1g SAR (W/kg)		Standalone SAR Sum (W/kg)	Peak SAR Separation Distance (mm)	SPLS Ratio
Ant "a"	Ant "b"	a	b	a+b	D_{a-b}	$(a+b)^{1.5}/D_{a-b}$
LTE B2	802.11a Ant 1	1.009	< 0.778	< 1.787	151.30	< 0.02

© 2014 PCTEST Engineering Laboratory, Inc.

The sum of the standalone SAR values was above 1.6 W/kg for the Body back side configuration at a separation distance of 21 mm with LTE B2 antenna operating at maximum output power with 5 GHz WLAN Antenna 2.

Table 11-29
Peak SAR Locations for Body Back Side at 21 mm

Mode/Band	x (mm)	y (mm)
LTE B2	-1.10	76.40
802.11a Ant 2	-24.03	-42.99

Figure 11-8
Peak SAR Locations

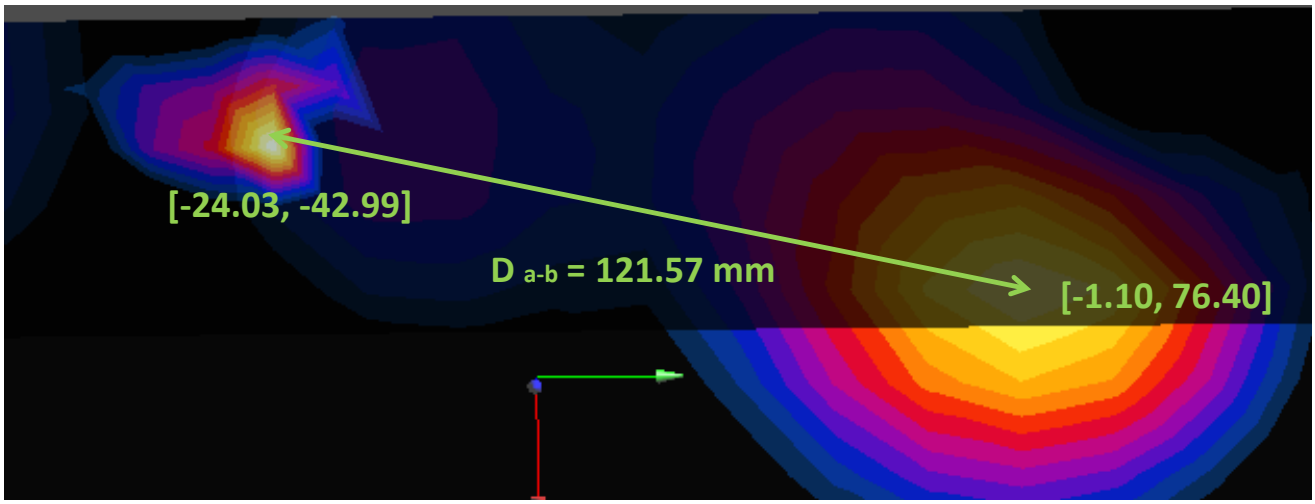

Table 11-30
SAR Sum to Peak Location Separation Ratio Calculation

Antenna Pair		Standalone 1g SAR (W/kg)		Standalone SAR Sum (W/kg)	Peak SAR Separation Distance (mm)	SPLS Ratio
Ant "a"	Ant "b"	a	b	a+b	D_{a-b}	$(a+b)^{1.5}/D_{a-b}$
LTE B2	802.11a Ant 2	1.009	< 0.638	< 1.647	121.57	< 0.02

11.5 Simultaneous Transmission Conclusion

The above numerical summed SAR and SPLSR results for all the worst-case simultaneous transmission conditions were below the SAR limit. Therefore, the above analysis is sufficient to determine that simultaneous transmission cases will not exceed the SAR limit and therefore no measured volumetric simultaneous SAR summation is required per FCC KDB Publication 447498 D01v05 and IEEE 1528-2013 Section 6.3.4.1.2.

© 2014 PCTEST Engineering Laboratory, Inc.

12 SAR MEASUREMENT VARIABILITY

12.1 Measurement Variability

Per FCC KDB Publication 865664 D01v01, SAR measurement variability was assessed for each frequency band, which was determined by the SAR probe calibration point and tissue-equivalent medium used for the device measurements. When both head and body tissue-equivalent media were required for SAR measurements in a frequency band, the variability measurement procedures were applied to the tissue medium with the highest measured SAR, using the highest measured SAR configuration for that tissue-equivalent medium. These additional measurements were repeated after the completion of all measurements requiring the same head or body tissue-equivalent medium in a frequency band. The test device was returned to ambient conditions (normal room temperature) with the battery fully charged before it was re-mounted on the device holder for the repeated measurement(s) to minimize any unexpected variations in the repeated results.

SAR Measurement Variability was assessed using the following procedures for each frequency band:

1) When the original highest measured SAR is ≥ 0.80 W/kg, the measurement was repeated once.
2) A second repeated measurement was preformed only if the ratio of largest to smallest SAR for the original and first repeated measurements was > 1.20 or when the original or repeated measurement was ≥ 1.45 W/kg (~ 10% from the 1-g SAR limit).
3) A third repeated measurement was performed only if the original, first or second repeated measurement was ≥ 1.5 W/kg and the ratio of largest to smallest SAR for the original, first and second repeated measurements is > 1.20.
4) Repeated measurements are not required when the original highest measured SAR is < 0.80 W/kg

Table 12-1
Body SAR Measurement Variability Results

BODY VARIABILITY RESULTS														
Band	FREQUENCY		Mode	Service	Side	Spacing	Measured SAR (1g)	1st Repeated SAR (1g)	Ratio	2nd Repeated SAR (1g)	Ratio	3rd Repeated SAR (1g)	Ratio
	MHz	Ch.					(W/kg)	(W/kg)		(W/kg)		(W/kg)	
1900	1900.00	19100	LTE Band 2 (PCS)	QPSK, 1 RB, 50 RB Offset	back	0 mm	1.080	1.000	1.08	N/A	N/A	N/A	N/A
ANSI / IEEE C95.1 1992 - SAFETY LIMIT Spatial Peak Uncontrolled Exposure/General Population						Body 1.6 W/kg (mW/g) averaged over 1 gram							

12.2 Measurement Uncertainty

The measured SAR was <1.5 W/kg for all frequency bands. Therefore, per KDB Publication 865664 D01v01, the extended measurement uncertainty analysis per IEEE 1528-2003 was not required.

© 2014 PCTEST Engineering Laboratory, Inc.

13 EQUIPMENT LIST

Manufacturer	Model	Description	Cal Date	Cal Interval	Cal Due	Serial Number
Agilent	8648D	(9kHz-4GHz) Signal Generator	4/15/2014	Annual	4/15/2015	3629U00687
Agilent	8753ES	S-Parameter Network Analyzer	10/29/2013	Annual	10/29/2014	US39170122
Agilent	8753ES	S-Parameter Network Analyzer	5/22/2014	Annual	5/22/2015	US39170118
Agilent	E4438C	ESG Vector Signal Generator	4/25/2014	Annual	4/25/2015	MY42082385
Agilent	E5515C	Wireless Communications Test Set	3/28/2014	Annual	3/28/2015	GB44400860
Agilent	E8257D	(250kHz-20GHz) Signal Generator	4/15/2014	Annual	4/15/2015	MY45470194
Agilent	N4010A	Wireless Connectivity Test Set	N/A	N/A	N/A	GB46170464
Agilent	N5182A	MXG Vector Signal Generator	4/15/2014	Annual	4/15/2015	MY47420800
Agilent	N5182A	MXG Vector Signal Generator	4/15/2014	Annual	4/15/2015	MY47420651
Agilent	N9020A	MXA Signal Analyzer	10/29/2013	Annual	10/29/2014	US46470561
Amplifier Research	15S1G6	Amplifier	CBT	N/A	CBT	433977
Amplifier Research	15S1G6	Amplifier	CBT	N/A	CBT	433978
Anritsu	MA24106A	USB Power Sensor	1/3/2014	Annual	1/3/2015	1344554
Anritsu	MA24106A	USB Power Sensor	1/3/2014	Annual	1/3/2015	1344557
Anritsu	MA2411B	Pulse Power Sensor	3/25/2014	Annual	3/25/2015	1207470
Anritsu	MA2411B	Pulse Power Sensor	2/3/2014	Annual	2/3/2015	1339018
Anritsu	MA2481A	Power Sensor	10/30/2013	Annual	10/30/2014	5605
Anritsu	ML2469A	Power Meter	3/14/2014	Annual	3/14/2015	1306009
Anritsu	ML2495A	Power Meter	10/31/2013	Annual	10/31/2014	1039008
Anritsu	MT8820C	Radio Communication Analyzer	5/6/2014	Annual	5/6/2015	6201144419
COMTech	AR85729-5	Solid State Amplifier	CBT	N/A	CBT	M1S5A00-009
COMTECH	AR85729-5/5759B	Solid State Amplifier	CBT	N/A	CBT	M3W1A00-1002
Control Company	4353	Long Stem Thermometer	9/25/2012	Biennial	9/25/2014	122541139
Control Company	36934-158	Wall-Mounted Thermometer	4/29/2014	Biennial	4/29/2016	122014488
Control Company	61220-416	Long-Stem Thermometer	4/29/2014	Biennial	4/29/2016	111331323
Fisher Scientific	15-077-960	Digital Thermometer	12/4/2013	Biennial	12/4/2015	130764558
Fisher Scientific	15-078J	Long Stem Thermometer	10/30/2012	Biennial	10/30/2014	122626059
Fisher Scientific	S97611	Thermometer	4/12/2013	Biennial	4/12/2015	130219303
Gigatronics	80701A	(0.05-18GHz) Power Sensor	10/30/2013	Annual	10/30/2014	1833460
Gigatronics	8651A	Universal Power Meter	10/30/2013	Annual	10/30/2014	8650319
MCL	BW-N6W5+	6dB Attenuator	CBT	N/A	CBT	1139
MiniCircuits	SLP-2400+	Low Pass Filter	CBT	N/A	CBT	R8979500903
MiniCircuits	VLF-6000+	Low Pass Filter	CBT	N/A	CBT	N/A
MiniCircuits	VLF-6000+	Low Pass Filter	CBT	N/A	CBT	N/A
Mini-Circuits	BW-N20W5	Power Attenuator	CBT	N/A	CBT	1226
Mini-Circuits	BW-N20W5+	DC to 18 GHz Precision Fixed 20 dB Attenuator	CBT	N/A	CBT	N/A
Mini-Circuits	NLP-1200+	Low Pass Filter DC to 1000 MHz	CBT	N/A	CBT	N/A
Mini-Circuits	NLP-2950+	Low Pass Filter DC to 2700 MHz	CBT	N/A	CBT	N/A
Mitutoyo	CD-6"CSX	Digital Caliper	5/8/2014	Biennial	5/8/2016	13264162
Mitutoyo	CD-6"CSX	Digital Caliper	5/8/2014	Biennial	5/8/2016	13264165
Narda	4014C-6	4 - 8 GHz SMA 6 dB Directional Coupler	CBT	N/A	CBT	N/A
Narda	4772-3	Attenuator (3dB)	CBT	N/A	CBT	9406
Narda	BW-S3W2	Attenuator (3dB)	CBT	N/A	CBT	120
Pasternack	PE2208-6	Bidirectional Coupler	CBT	N/A	CBT	N/A
Pasternack	PE2209-10	Bidirectional Coupler	CBT	N/A	CBT	N/A
Rohde & Schwarz	CMU200	Base Station Simulator	6/6/2014	Annual	6/6/2015	109892
Rohde & Schwarz	CMW500	Radio Communication Tester	2/20/2014	Annual	2/20/2015	128633
Rohde & Schwarz	CMW500	Radio Communication Tester	6/3/2014	Annual	6/3/2015	108843
Rohde & Schwarz	NRVD	Dual Channel Power Meter	10/12/2012	Biennial	10/12/2014	101695
Rohde & Schwarz	NRVS	Single Channel Power Meter	10/31/2013	Annual	10/31/2014	835360/0079
Rohde & Schwarz	NRV-Z32	Peak Power Sensor	10/12/2012	Biennial	10/12/2014	836019/013
Rohde & Schwarz	SME06	Signal Generator	10/30/2013	Annual	10/30/2014	832026
Seekonk	NC-100	Torque Wrench	3/18/2014	Biennial	3/18/2016	N/A
Seekonk	NC-100	Torque Wrench	3/18/2014	Biennial	3/18/2016	22313
Seekonk	NC-100	Torque Wrench 5/16", 8" lbs	3/18/2014	Biennial	3/18/2016	N/A
SPEAG	D1765V2	1765 MHz SAR Dipole	5/7/2014	Annual	5/7/2015	1008
SPEAG	D1900V2	1900 MHz SAR Dipole	4/9/2014	Annual	4/9/2015	5d141
SPEAG	D1900V2	1900 MHz SAR Dipole	2/27/2014	Annual	2/27/2015	5d148
SPEAG	D2450V2	2450 MHz SAR Dipole	8/23/2013	Annual	8/23/2014	719
SPEAG	D5GHzV2	5 GHz SAR Dipole	9/23/2013	Annual	9/23/2014	1007
SPEAG	D750V3	750 MHz Dipole	1/20/2014	Annual	1/20/2015	1003
SPEAG	D835V2	835 MHz SAR Dipole	7/10/2014	Annual	7/10/2015	4d132
SPEAG	DAE4	Dasy Data Acquisition Electronics	12/12/2013	Annual	12/12/2014	649
SPEAG	DAE4	Dasy Data Acquisition Electronics	9/17/2013	Annual	9/17/2014	1323
SPEAG	DAE4	Dasy Data Acquisition Electronics	3/17/2014	Annual	3/17/2015	1364
SPEAG	DAE4	Dasy Data Acquisition Electronics	4/11/2014	Annual	4/11/2015	1368
SPEAG	DAE4	Dasy Data Acquisition Electronics	11/18/2013	Annual	11/18/2014	1407
SPEAG	DAK-3.5	Dielectric Assessment Kit	5/6/2014	Annual	5/6/2015	1070
SPEAG	DAK-3.5	Dielectric Assessment Kit	11/13/2013	Annual	11/13/2014	1091
SPEAG	ES3DV3	SAR Probe	4/11/2014	Annual	4/11/2015	3213
SPEAG	ES3DV3	SAR Probe	9/23/2013	Annual	9/23/2014	3288
SPEAG	ES3DV3	SAR Probe	4/17/2014	Annual	4/17/2015	3319
SPEAG	ES3DV3	SAR Probe	11/25/2013	Annual	11/25/2014	3332
SPEAG	EX3DV4	SAR Probe	12/18/2013	Annual	12/18/2014	3920
Tektronix	RSA6114A	Real Time Spectrum Analyzer	4/16/2014	Annual	4/16/2015	B010177

Note: CBT (Calibrated Before Testing). Prior to testing, the measurement paths containing a cable, amplifier, attenuator, coupler or filter were connected to a calibrated source (i.e. a signal generator) to determine the losses of the measurement path. The power meter offset was then adjusted to compensate for the measurement system losses. This level offset is stored within the power meter before measurements are made. This calibration verification procedure applies to the system verification and output power measurements. The calibrated reading is then taken directly from the power meter after compensation of the losses for all final power measurements.

All calibrated equipments are used within their calibration period.

© 2014 PCTEST Engineering Laboratory, Inc.

14 MEASUREMENT UNCERTAINTIES

Applicable for frequencies less than 3000 MHz.

a	b	c	d	e= f(d,k)	f	g	h = c x f/e	i = c x g/e	k
Uncertainty Component	**IEEE 1528 Sec.**	**Tol. (± %)**	**Prob. Dist.**	**Div.**	**c_i 1gm**	**c_i 10 gms**	**1gm u_i (± %)**	**10gms u_i (± %)**	**v_i**
Measurement System									
Probe Calibration	E.2.1	6.0	N	1	1.0	1.0	6.0	6.0	∞
Axial Isotropy	E.2.2	0.25	N	1	0.7	0.7	0.2	0.2	∞
Hemishperical Isotropy	E.2.2	1.3	N	1	1.0	1.0	1.3	1.3	∞
Boundary Effect	E.2.3	0.4	N	1	1.0	1.0	0.4	0.4	∞
Linearity	E.2.4	0.3	N	1	1.0	1.0	0.3	0.3	∞
System Detection Limits	E.2.5	5.1	N	1	1.0	1.0	5.1	5.1	∞
Readout Electronics	E.2.6	1.0	N	1	1.0	1.0	1.0	1.0	∞
Response Time	E.2.7	0.8	R	1.73	1.0	1.0	0.5	0.5	∞
Integration Time	E.2.8	2.6	R	1.73	1.0	1.0	1.5	1.5	∞
RF Ambient Conditions	E.6.1	3.0	R	1.73	1.0	1.0	1.7	1.7	∞
Probe Positioner Mechanical Tolerance	E.6.2	0.4	R	1.73	1.0	1.0	0.2	0.2	∞
Probe Positioning w/ respect to Phantom	E.6.3	2.9	R	1.73	1.0	1.0	1.7	1.7	∞
Extrapolation, Interpolation & Integration algorithms for Max. SAR Evaluation	E.5	1.0	R	1.73	1.0	1.0	0.6	0.6	∞
Test Sample Related									
Test Sample Positioning	E.4.2	6.0	N	1	1.0	1.0	6.0	6.0	287
Device Holder Uncertainty	E.4.1	3.32	R	1.73	1.0	1.0	1.9	1.9	∞
Output Power Variation - SAR drift measurement	6.6.2	5.0	R	1.73	1.0	1.0	2.9	2.9	∞
Phantom & Tissue Parameters									
Phantom Uncertainty (Shape & Thickness tolerances)	E.3.1	4.0	R	1.73	1.0	1.0	2.3	2.3	∞
Liquid Conductivity - deviation from target values	E.3.2	5.0	R	1.73	0.64	0.43	1.8	1.2	∞
Liquid Conductivity - measurement uncertainty	E.3.3	3.8	N	1	0.64	0.43	2.4	1.6	6
Liquid Permittivity - deviation from target values	E.3.2	5.0	R	1.73	0.60	0.49	1.7	1.4	∞
Liquid Permittivity - measurement uncertainty	E.3.3	4.5	N	1	0.60	0.49	2.7	2.2	6
Combined Standard Uncertainty (k=1)			RSS				12.1	11.7	299
Expanded Uncertainty (95% CONFIDENCE LEVEL)			k=2				24.2	23.5	

The above measurement uncertainties are according to IEEE Std. 1528-2003

© 2014 PCTEST Engineering Laboratory, Inc.

Applicable for frequencies up to 6 GHz.

a	b	c	d	e= f(d,k)	f	g	h = c x f/e	i = c x g/e	k
Uncertainty Component	**IEEE 1528 Sec.**	**Tol. (± %)**	**Prob. Dist.**	**Div.**	**c_i 1gm**	**c_i 10 gms**	**1gm u_i (± %)**	**10gms u_i (± %)**	**v_i**
Measurement System									
Probe Calibration	E.2.1	6.55	N	1	1.0	1.0	6.6	6.6	∞
Axial Isotropy	E.2.2	0.25	N	1	0.7	0.7	0.2	0.2	∞
Hemishperical Isotropy	E.2.2	1.3	N	1	1.0	1.0	1.3	1.3	∞
Boundary Effect	E.2.3	0.4	N	1	1.0	1.0	0.4	0.4	∞
Linearity	E.2.4	0.3	N	1	1.0	1.0	0.3	0.3	∞
System Detection Limits	E.2.5	5.1	N	1	1.0	1.0	5.1	5.1	∞
Readout Electronics	E.2.6	1.0	N	1	1.0	1.0	1.0	1.0	∞
Response Time	E.2.7	0.8	R	1.73	1.0	1.0	0.5	0.5	∞
Integration Time	E.2.8	2.6	R	1.73	1.0	1.0	1.5	1.5	∞
RF Ambient Conditions	E.6.1	3.0	R	1.73	1.0	1.0	1.7	1.7	∞
Probe Positioner Mechanical Tolerance	E.6.2	0.4	R	1.73	1.0	1.0	0.2	0.2	∞
Probe Positioning w/ respect to Phantom	E.6.3	2.9	R	1.73	1.0	1.0	1.7	1.7	∞
Extrapolation, Interpolation & Integration algorithms for Max. SAR Evaluation	E.5	1.0	R	1.73	1.0	1.0	0.6	0.6	∞
Test Sample Related									
Test Sample Positioning	E.4.2	6.0	N	1	1.0	1.0	6.0	6.0	287
Device Holder Uncertainty	E.4.1	3.32	R	1.73	1.0	1.0	1.9	1.9	∞
Output Power Variation - SAR drift measurement	6.6.2	5.0	R	1.73	1.0	1.0	2.9	2.9	∞
Phantom & Tissue Parameters									
Phantom Uncertainty (Shape & Thickness tolerances)	E.3.1	4.0	R	1.73	1.0	1.0	2.3	2.3	∞
Liquid Conductivity - deviation from target values	E.3.2	5.0	R	1.73	0.64	0.43	1.8	1.2	∞
Liquid Conductivity - measurement uncertainty	E.3.3	3.8	N	1	0.64	0.43	2.4	1.6	6
Liquid Permittivity - deviation from target values	E.3.2	5.0	R	1.73	0.60	0.49	1.7	1.4	∞
Liquid Permittivity - measurement uncertainty	E.3.3	4.5	N	1	0.60	0.49	2.7	2.2	6
Combined Standard Uncertainty (k=1)			RSS				12.4	12.0	299
Expanded Uncertainty (95% CONFIDENCE LEVEL)			k=2				24.7	24.0	

The above measurement uncertainties are according to IEEE Std. 1528-2003

© 2014 PCTEST Engineering Laboratory, Inc.

15 CONCLUSION

15.1 Measurement Conclusion

The SAR evaluation indicates that the EUT complies with the RF radiation exposure limits of the FCC and Industry Canada, with respect to all parameters subject to this test. These measurements were taken to simulate the RF effects of RF exposure under worst-case conditions. Precise laboratory measures were taken to assure repeatability of the tests. The results and statements relate only to the item(s) tested.

Please note that the absorption and distribution of electromagnetic energy in the body are very complex phenomena that depend on the mass, shape, and size of the body, the orientation of the body with respect to the field vectors, and the electrical properties of both the body and the environment. Other variables that may play a substantial role in possible biological effects are those that characterize the environment (e.g. ambient temperature, air velocity, relative humidity, and body insulation) and those that characterize the individual (e.g. age, gender, activity level, debilitation, or disease). Because various factors may interact with one another to vary the specific biological outcome of an exposure to electromagnetic fields, any protection guide should consider maximal amplification of biological effects as a result of field-body interactions, environmental conditions, and physiological variables. [3]

© 2014 PCTEST Engineering Laboratory, Inc.

16 REFERENCES

[1] Federal Communications Commission, ET Docket 93-62, Guidelines for Evaluating the Environmental Effects of Radiofrequency Radiation, Aug. 1996.

[2] ANSI/IEEE C95.1-2005, American National Standard safety levels with respect to human exposure to radio frequency electromagnetic fields, 3kHz to 300GHz, New York: IEEE, 2006.

[3] ANSI/IEEE C95.1-1992, American National Standard safety levels with respect to human exposure to radio frequency electromagnetic fields, 3kHz to 300GHz, New York: IEEE, Sept. 1992.

[4] ANSI/IEEE C95.3-2002, IEEE Recommended Practice for the Measurement of Potentially Hazardous Electromagnetic Fields - RF and Microwave, New York: IEEE, December 2002.

[5] IEEE Standards Coordinating Committee 39 –Standards Coordinating Committee 34 – IEEE Std. 1528-2003, Recommended Practice for Determining the Peak Spatial-Average Specific Absorption Rate (SAR) in the Human Body Due to Wireless Communications Devices.

[6] NCRP, National Council on Radiation Protection and Measurements, Biological Effects and Exposure Criteria for RadioFrequency Electromagnetic Fields, NCRP Report No. 86, 1986. Reprinted Feb. 1995.

[7] T. Schmid, O. Egger, N. Kuster, Automated E-field scanning system for dosimetric assessments, IEEE Transaction on Microwave Theory and Techniques, vol. 44, Jan. 1996, pp. 105-113.

[8] K. Pokovic, T. Schmid, N. Kuster, Robust setup for precise calibration of E-field probes in tissue simulating liquids at mobile communications frequencies, ICECOM97, Oct. 1997, pp. -124.

[9] K. Pokovic, T. Schmid, and N. Kuster, E-field Probe with improved isotropy in brain simulating liquids, Proceedings of the ELMAR, Zadar, Croatia, June 23-25, 1996, pp. 172-175.

[10] Schmid & Partner Engineering AG, Application Note: Data Storage and Evaluation, June 1998, p2.

[11] V. Hombach, K. Meier, M. Burkhardt, E. Kuhn, N. Kuster, The Dependence of EM Energy Absorption upon Human Modeling at 900 MHz, IEEE Transaction on Microwave Theory and Techniques, vol. 44 no. 10, Oct. 1996, pp. 1865-1873.

[12] N. Kuster and Q. Balzano, Energy absorption mechanism by biological bodies in the near field of dipole antennas above 300MHz, IEEE Transaction on Vehicular Technology, vol. 41, no. 1, Feb. 1992, pp. 17-23.

[13] G. Hartsgrove, A. Kraszewski, A. Surowiec, Simulated Biological Materials for Electromagnetic Radiation Absorption Studies, University of Ottawa, Bioelectromagnetics, Canada: 1987, pp. 29-36.

[14] Q. Balzano, O. Garay, T. Manning Jr., Electromagnetic Energy Exposure of Simulated Users of Portable Cellular Telephones, IEEE Transactions on Vehicular Technology, vol. 44, no.3, Aug. 1995.

[15] W. Gander, Computermathematick, Birkhaeuser, Basel, 1992.

[16] W.H. Press, S.A. Teukolsky, W.T. Vetterling, and B.P. Flannery, Numerical Recipes in C, The Art of Scientific Computing, Second edition, Cambridge University Press, 1992.

[17] N. Kuster, R. Kastle, T. Schmid, Dosimetric evaluation of mobile communications equipment with known precision, IEEE Transaction on Communications, vol. E80-B, no. 5, May 1997, pp. 645-652.

[18] CENELEC CLC/SC111B, European Prestandard (prENV 50166-2), Human Exposure to Electromagnetic Fields High-frequency: 10kHz-300GHz, Jan. 1995.

© 2014 PCTEST Engineering Laboratory, Inc.

[19] Prof. Dr. Niels Kuster, ETH, Eidgenössische Technische Hoschschule Zürich, Dosimetric Evaluation of the Cellular Phone.

[20] IEC 62209-1, Human exposure to radio frequency fields from hand-held and body-mounted wireless communication devices - Human models, instrumentation, and procedures - Part 1: Procedure to determine the specific absorption rate (SAR) for hand-held devices used in close proximity to the ear (frequency range of 300 MHz to 3 GHz), Feb. 2005.

[21] Industry Canada RSS-102 Radio Frequency Exposure Compliance of Radiocommunication Apparatus (All Frequency Bands) Issue 4, March 2010.

[22] Health Canada Safety Code 6 Limits of Human Exposure to Radio Frequency Electromagnetic Fields in the Frequency Range from 3 kHz – 300 GHz, 2009

[23] FCC SAR Test Procedures for 2G-3G Devices, Mobile Hotspot and UMPC Devices KDB Publications 941225, D01-D07

[24] SAR Measurement procedures for IEEE 802.11a/b/g KDB Publication 248227 D01v01r02

[25] FCC SAR Considerations for Handsets with Multiple Transmitters and Antennas, KDB Publications 648474 D02-D04

[26] FCC SAR Evaluation Considerations for Laptop, Notebook, Netbook and Tablet Computers, FCC KDB Publication 616217 D04

[27] FCC SAR Measurement and Reporting Requirements for 100MHz – 6 GHz, KDB Publications 865664 D01-D02

[28] FCC General RF Exposure Guidance and SAR Procedures for Dongles, KDB Publication 447498, D01-D02

[29] Anexo à Resolução No. 533, de 10 de Septembro de 2009.

[30] IEC 62209-2, Human exposure to radio frequency fields from hand-held and body-mounted wireless communication devices - Human models, instrumentation, and procedures - Part 2: Procedure to determine the specific absorption rate (SAR) for wireless communication devices used in close proximity to the human body (frequency range of 30 MHz to 6 GHz), Mar. 2010.

© 2014 PCTEST Engineering Laboratory, Inc.

APPENDIX A: SAR TEST DATA

© 2014 PCTEST Engineering Laboratory, Inc.

PCTEST ENGINEERING LABORATORY, INC.

DUT: A3LSMT807R4; Type: Portable Tablet; Serial: FCC#5

Communication System: UID 0, Cellular CDMA; Frequency: 836.52 MHz; Duty Cycle: 1:1
Medium: 835 Body Medium parameters used (interpolated):
f = 836.52 MHz; σ = 0.946 S/m; ε_r = 54.598; ρ = 1000 kg/m^3
Phantom section: Flat Section; Space: 0.0 cm

Test Date: 08-21-2014; Ambient Temp: 24.3°C; Tissue Temp: 24.2°C

Probe: ES3DV3 - SN3288; ConvF(6.27, 6.27, 6.27); Calibrated: 9/23/2013;
Sensor-Surface: 3mm (Mechanical Surface Detection)
Electronics: DAE4 Sn1323; Calibrated: 9/17/2013
Phantom: SAM Sub Dasy B; Type: SAM 5.0; Serial: TP-1626
Measurement SW: DASY4, Version 4.7 (80); SEMCAD X Version 14.6.10 (7331)

Mode: Cellular EVDO, Body SAR, Right Edge, Mid.ch

Area Scan (9x17x1): Measurement grid: dx=5mm, dy=15mm
Zoom Scan (5x5x7)/Cube 0: Measurement grid: dx=8mm, dy=8mm, dz=5mm
Reference Value = 21.229 V/m; Power Drift = 0.01 dB
Peak SAR (extrapolated) = 0.510 W/kg
SAR(1 g) = 0.328 W/kg

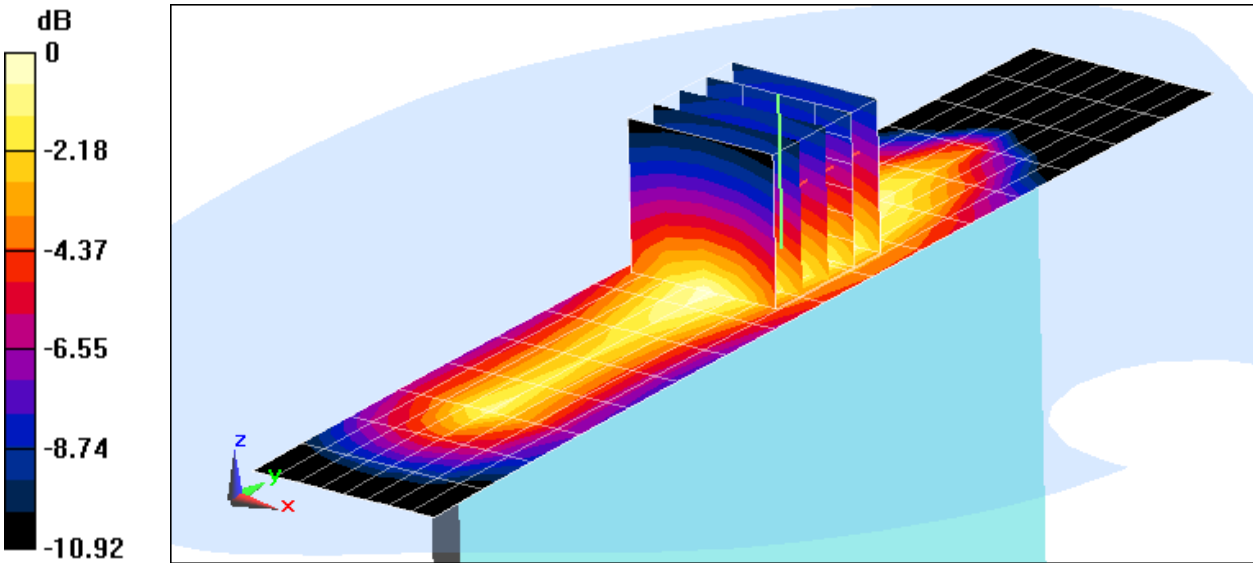

0 dB = 0.389 W/kg = -4.10 dBW/kg

PCTEST ENGINEERING LABORATORY, INC.

DUT: A3LSMT807R4; Type: Portable Tablet; Serial: FCC#5

Communication System: UID 0, CDMA; Frequency: 1880 MHz; Duty Cycle: 1:1
Medium: 1900 Body Medium parameters used:
f = 1880 MHz; σ = 1.502 S/m; ε_r = 52.007; ρ = 1000 kg/m^3
Phantom section: Flat Section; Space: 1.9 cm

Test Date: 08-28-2014; Ambient Temp: 23.5°C; Tissue Temp: 22.1°C

Probe: ES3DV3 - SN3319; ConvF(4.67, 4.67, 4.67); Calibrated: 4/17/2014;
Sensor-Surface: 3mm (Mechanical Surface Detection)
Electronics: DAE4 Sn1368; Calibrated: 4/11/2014
Phantom: ELI left; Type: QDOVA002AA; Serial: TP:1202
Measurement SW: DASY52, Version 52.8 (8); SEMCAD X Version 14.6.10 (7331)

Mode: PCS EVDO, Body SAR, Top Edge, Mid.ch

Area Scan (10x19x1): Measurement grid: dx=5mm, dy=15mm
Zoom Scan (5x5x7)/Cube 0: Measurement grid: dx=8mm, dy=8mm, dz=5mm
Reference Value = 22.660 V/m; Power Drift = -0.04 dB
Peak SAR (extrapolated) = 1.04 W/kg
SAR(1 g) = 0.676 W/kg

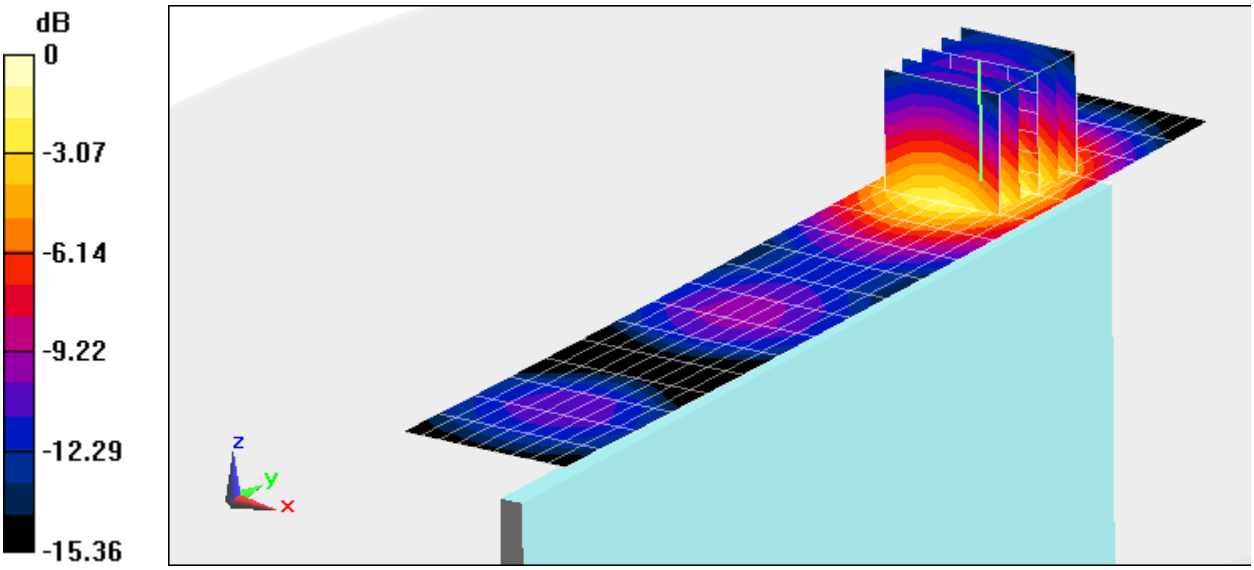

0 dB = 0.805 W/kg = -0.94 dBW/kg

PCTEST ENGINEERING LABORATORY, INC.

DUT: A3LSMT807R4; Type: Portable Tablet; Serial: FCC#4

Communication System: UID 0, LTE Band 12; Frequency: 707.5 MHz; Duty Cycle: 1:1
Medium: 750 Body Medium parameters used (interpolated):
f = 707.5 MHz; σ = 0.927 S/m; ε_r = 54.427; ρ = 1000 kg/m^3
Phantom section: Flat Section; Space: 0.0 cm

Test Date: 08-12-2014; Ambient Temp: 23.2°C; Tissue Temp: 22.5°C

Probe: ES3DV3 - SN3332; ConvF(6.21, 6.21, 6.21); Calibrated: 11/25/2013;
Sensor-Surface: 3mm (Mechanical Surface Detection)
Electronics: DAE4 Sn1407; Calibrated: 11/18/2013
Phantom: ELI v5.0; Type: QDOVA001BB; Serial: 1226
Measurement SW: DASY52, Version 52.8 (8); SEMCAD X Version 14.6.10 (7331)

Mode: LTE Band 12, Body SAR, Right Edge, Mid.ch, 10 MHz Bandwidth, QPSK, 1 RB, 49 RB Offset

Area Scan (11x15x1): Measurement grid: dx=5mm, dy=15mm
Zoom Scan (5x5x7)/Cube 0: Measurement grid: dx=8mm, dy=8mm, dz=5mm
Reference Value = 19.148 V/m; Power Drift = 0.00 dB
Peak SAR (extrapolated) = 0.495 W/kg
SAR(1 g) = 0.306 W/kg

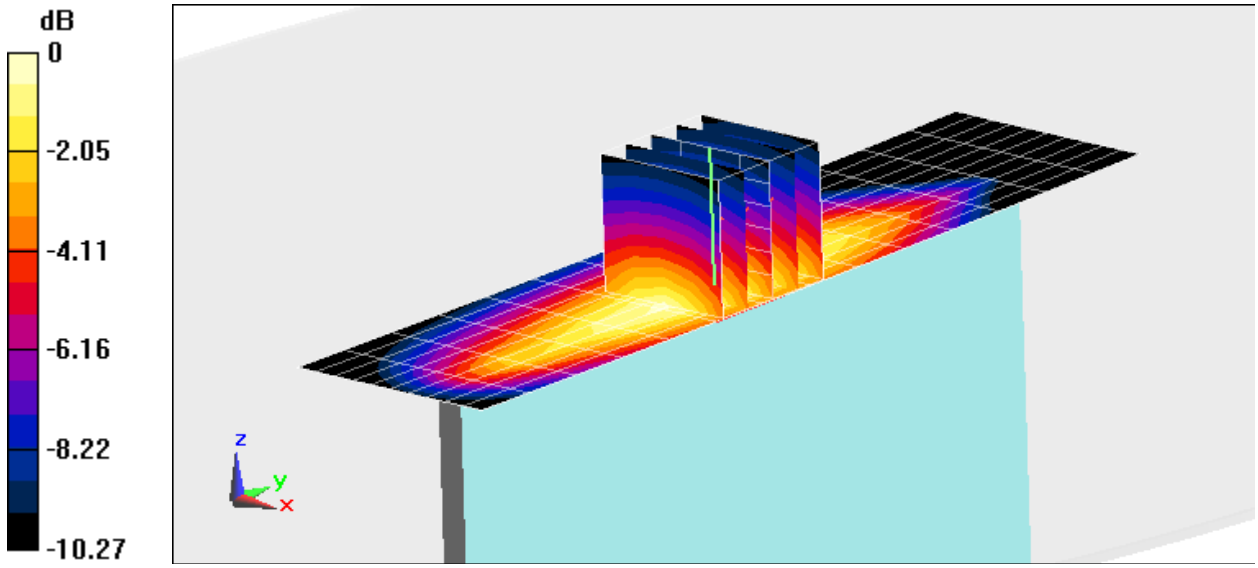

0 dB = 0.374 W/kg = -4.27 dBW/kg

PCTEST ENGINEERING LABORATORY, INC.

DUT: A3LSMT807R4; Type: Portable Tablet; Serial: FCC#4

Communication System: UID 0, LTE BAND 5; Frequency: 836.5 MHz; Duty Cycle: 1:1
Medium: 835 Body Medium parameters used (interpolated):
f = 836.5 MHz; σ = 0.959 S/m; ε_r = 55.226; ρ = 1000 kg/m^3
Phantom section: Flat Section; Space: 0.0 cm

Test Date: 08-18-2014; Ambient Temp: 23.4°C; Tissue Temp: 22.2°C

Probe: ES3DV3 - SN3288; ConvF(6.27, 6.27, 6.27); Calibrated: 9/23/2013;
Sensor-Surface: 3mm (Mechanical Surface Detection)
Electronics: DAE4 Sn1323; Calibrated: 9/17/2013
Phantom: SAM Sub Dasy B; Type: SAM 5.0; Serial: TP-1626
Measurement SW: DASY4, Version 4.7 (80); SEMCAD X Version 14.6.10 (7331)

Mode: LTE Band 5 (Cell), Body SAR, Right Edge, Mid.ch, 10 MHz Bandwidth, QPSK, 1 RB, 25 RB Offset

Area Scan (13x15x1): Measurement grid: dx=5mm, dy=15mm
Zoom Scan (5x5x7)/Cube 0: Measurement grid: dx=8mm, dy=8mm, dz=5mm
Reference Value = 18.476 V/m; Power Drift = -0.05 dB
Peak SAR (extrapolated) = 0.454 W/kg
SAR(1 g) = 0.293 W/kg

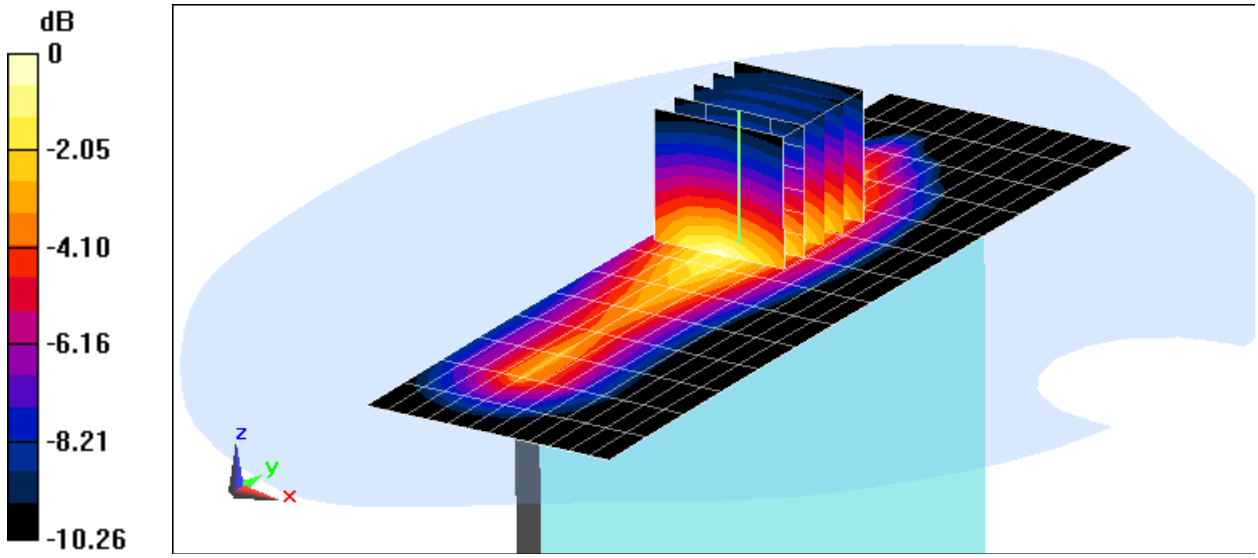

0 dB = 0.348 W/kg = -4.58 dBW/kg

PCTEST ENGINEERING LABORATORY, INC.

DUT: A3LSMT807R4; Type: Portable Tablet; Serial: FCC#4

Communication System: UID 0, LTE Band 4 (AWS); Frequency: 1732.5 MHz; Duty Cycle: 1:1
Medium: 1750 Body Medium parameters used (interpolated):
f = 1732.5 MHz; σ = 1.43 S/m; ε_r = 52.102; ρ = 1000 kg/m^3
Phantom section: Flat Section; Space: 0.0 cm

Test Date: 08-14-2014; Ambient Temp: 23.6°C; Tissue Temp: 23.8°C

Probe: ES3DV3 - SN3332; ConvF(4.93, 4.93, 4.93); Calibrated: 11/25/2013;
Sensor-Surface: 3mm (Mechanical Surface Detection)
Electronics: DAE4 Sn1407; Calibrated: 11/18/2013
Phantom: ELI v5.0; Type: QDOVA001BB; Serial: 1226
Measurement SW: DASY52, Version 52.8 (8); SEMCAD X Version 14.6.10 (7331)

Mode: LTE Band 4 (AWS), Body SAR, Right Edge, Mid.ch, 20 MHz Bandwidth, QPSK, 1 RB, 99 RB Offset

Area Scan (11x15x1): Measurement grid: dx=5mm, dy=15mm
Zoom Scan (5x5x7)/Cube 0: Measurement grid: dx=8mm, dy=8mm, dz=5mm
Reference Value = 13.049 V/m; Power Drift = 0.05 dB
Peak SAR (extrapolated) = 0.388 W/kg
SAR(1 g) = 0.205 W/kg

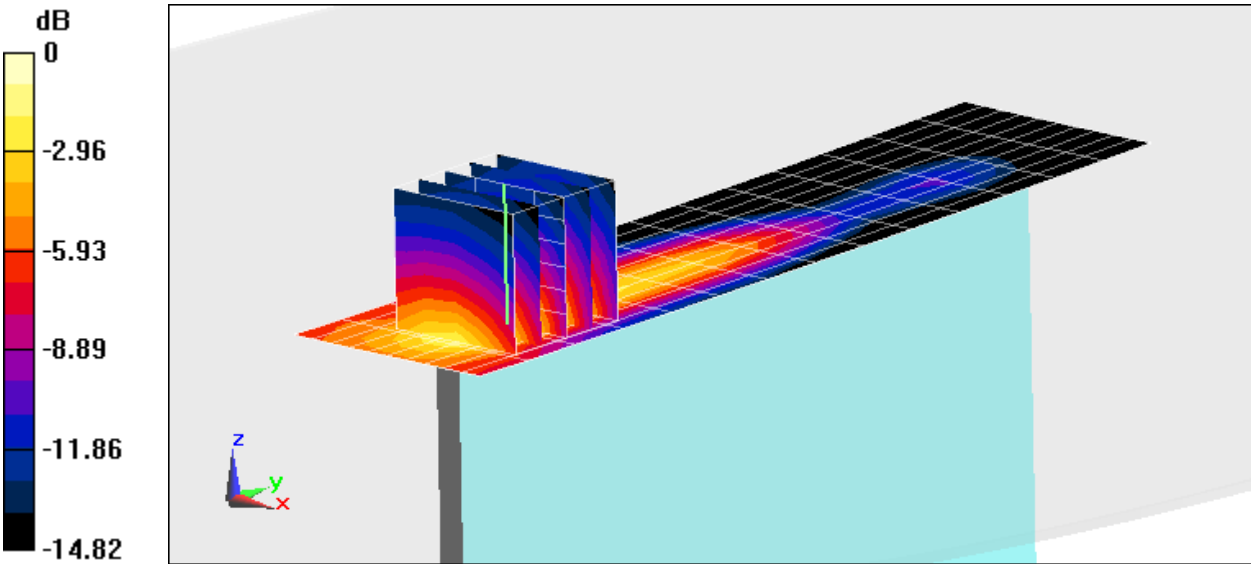

0 dB = 0.272 W/kg = -5.65 dBW/kg

PCTEST ENGINEERING LABORATORY, INC.

DUT: A3LSMT807R4; Type: Portable Tablet; Serial: FCC#3

Communication System: UID 0, LTE PCS20 Mhz; Frequency: 1900 MHz; Duty Cycle: 1:1
Medium: 1900 Body Medium parameters used (interpolated):
f = 1900 MHz; σ = 1.569 S/m; ε_r = 51.687; ρ = 1000 kg/m^3
Phantom section: Flat Section; Space: 0.0 cm

Test Date: 08-18-2014; Ambient Temp: 23.0°C; Tissue Temp: 22.2°C

Probe: ES3DV3 - SN3288; ConvF(4.82, 4.82, 4.82); Calibrated: 9/23/2013;
Sensor-Surface: 3mm (Mechanical Surface Detection)
Electronics: DAE4 Sn1323; Calibrated: 9/17/2013
Phantom: SAM with CRP; Type: SAM; Serial: TP1375
Measurement SW: DASY4, Version 4.7 (80); SEMCAD X Version 14.6.10 (7331)

Mode: LTE Band 2 (PCS), Body SAR, Back side, High.ch, 20 MHz Bandwidth, QPSK, 1 RB, 50 RB Offset

Area Scan (9x21x1): Measurement grid: dx=15mm, dy=15mm
Zoom Scan (5x5x7)/Cube 0: Measurement grid: dx=8mm, dy=8mm, dz=5mm
Reference Value = 28.065 V/m; Power Drift = -0.02 dB
Peak SAR (extrapolated) = 2.30 W/kg
SAR(1 g) = 1.08 W/kg

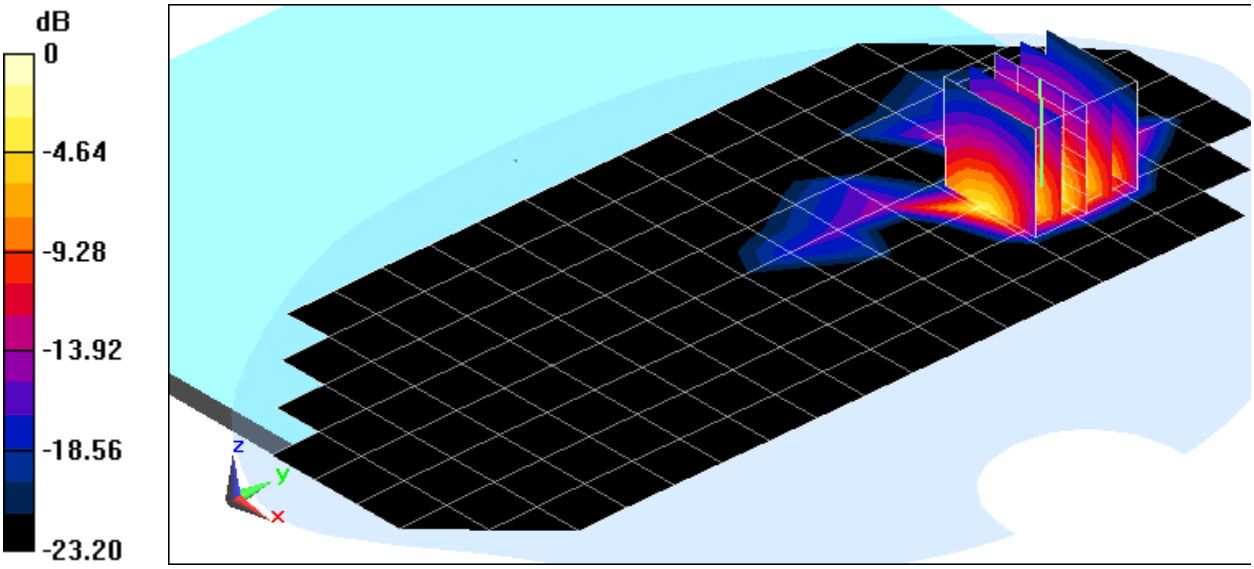

0 dB = 1.39 W/kg = 1.43 dBW/kg

PCTEST ENGINEERING LABORATORY, INC.

DUT: A3LSMT807R4; Type: Portable Tablet; Serial: FCC #7

Communication System: UID 0, IEEE 802.11n; Frequency: 2437 MHz;Duty Cycle: 1:1
Medium: 2450 Body Medium parameters used (interpolated):
f = 2437 MHz; σ = 1.932 S/m; ε_r = 51.735; ρ = 1000 kg/m^3
Phantom section: Flat Section; Space: 0.0 cm

Test Date: 06-24-2014; Ambient Temp: 20.9°C; Tissue Temp: 21.4°C

Probe: ES3DV3 - SN3213; ConvF(4.26, 4.26, 4.26); Calibrated: 4/11/2014;
Sensor-Surface: 3mm (Mechanical Surface Detection)
Electronics: DAE4 Sn1364; Calibrated: 3/17/2014
Phantom: SAM Main; Type: SAM 4.0; Serial: TP-1406
Measurement SW: DASY4, Version 4.7 (80); SEMCAD X Version 14.6.10 (7164)

Mode: IEEE 802.11n, Body SAR, Ch 06, 13 Mbps, Back Side, MIMO

Area Scan (11x24x1): Measurement grid: dx=12mm, dy=12mm
Zoom Scan (7x7x7)/Cube 0: Measurement grid: dx=5mm, dy=5mm, dz=5mm
Reference Value = 16.619 V/m; Power Drift = 0.01 dB
Peak SAR (extrapolated) = 1.64 W/kg
SAR(1 g) = 0.538 W/kg

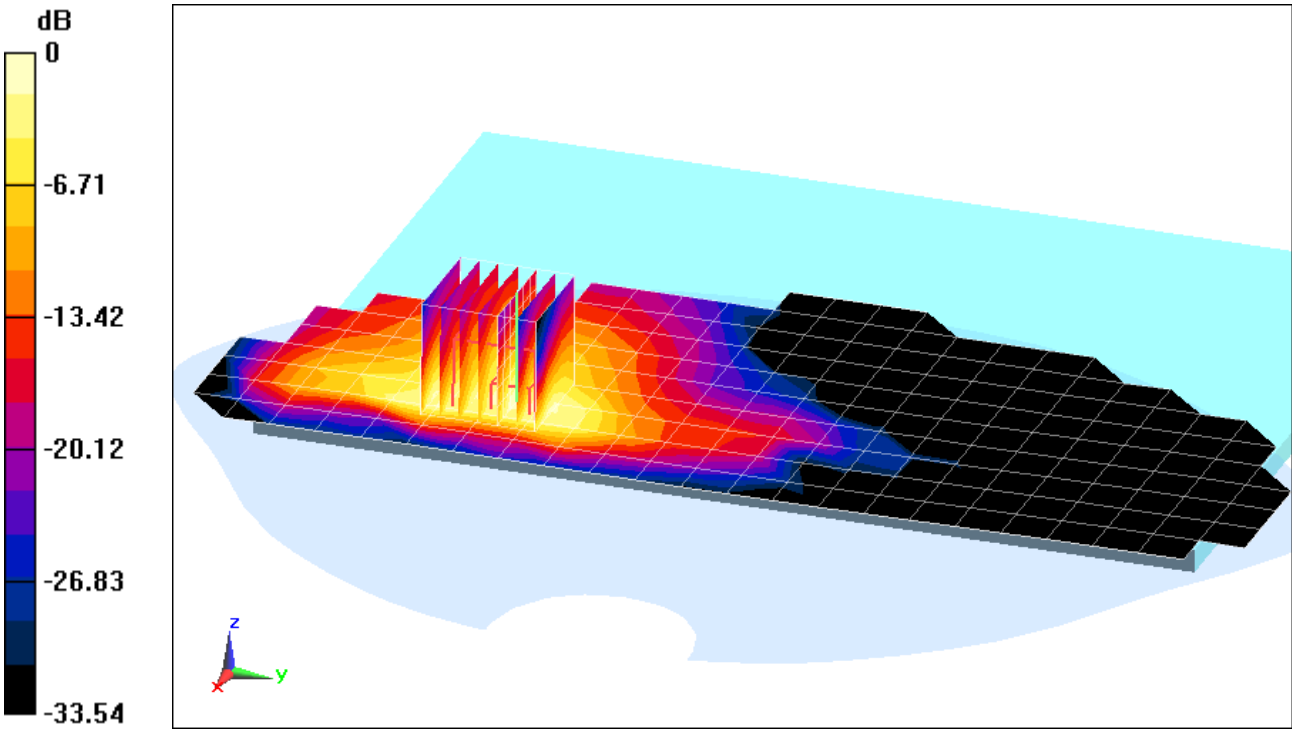

0 dB = 0.705 W/kg = -1.52 dBW/kg

PCTEST ENGINEERING LABORATORY, INC.

DUT: A3LSMT807R4; Type: Portable Tablet; Serial: FCC #7

Communication System: UID 0, IEEE 802.11a 5.2-5.8 GHz Band; Frequency: 5825 MHz;Duty Cycle: 1:1
Medium: 5 GHz Body Medium parameters used:
f = 5825 MHz; σ = 6.31 S/m; ε_r = 46.3; ρ = 1000 kg/m^3
Phantom section: Flat Section; Space: 0.0 cm

Test Date: 06-23-2014; Ambient Temp: 22.6°C; Tissue Temp: 22.9°C

Probe: EX3DV4 - SN3920; ConvF(4, 4, 4); Calibrated: 12/18/2013;
Sensor-Surface: 1.4mm (Mechanical Surface Detection)
Electronics: DAE4 Sn649; Calibrated: 12/12/2013
Phantom: SAM Sub; Type: SAM 4.0; Serial: TP-1357
Measurement SW: DASY4, Version 4.7 (80); SEMCAD X Version 14.6.10 (7164)

Mode: IEEE 802.11a, 5.8 GHz, Body SAR, Ch 165, 6 Mbps, Back Side, Ant 1

Area Scan (14x30x1): Measurement grid: dx=10mm, dy=10mm
Zoom Scan (8x8x7)/Cube 0: Measurement grid: dx=4mm, dy=4mm, dz=1.4mm; Graded Ratio: 1.4
Reference Value = 13.219 V/m; Power Drift = 0.03 dB

Peak SAR (extrapolated) = 6.08 W/kg

SAR(1 g) = 0.733 W/kg

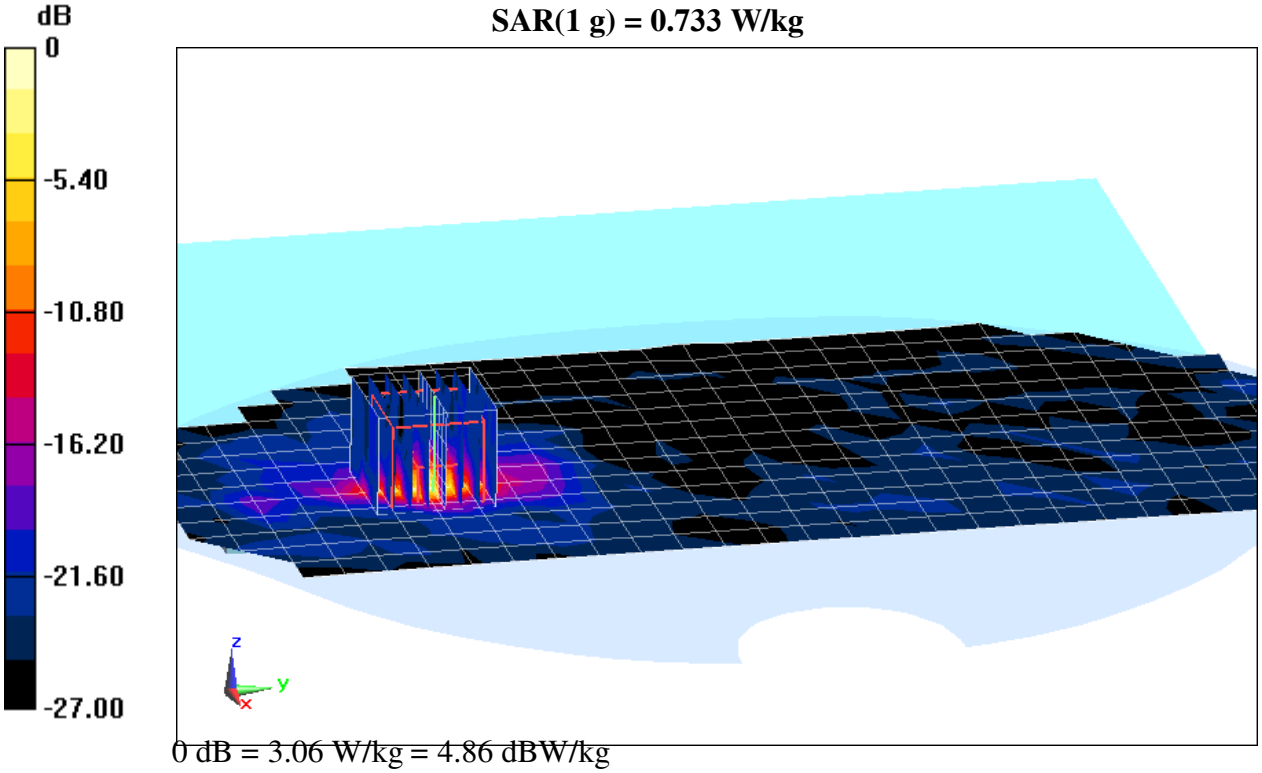

0 dB = 3.06 W/kg = 4.86 dBW/kg

PCTEST ENGINEERING LABORATORY, INC.

DUT: A3LSMT807R4; Type: Portable Tablet; Serial: FCC #7

Communication System: UID 0, IEEE 802.11a 5.2-5.8 GHz Band; Frequency: 5660 MHz;Duty Cycle: 1:1
Medium: 5 GHz Body Medium parameters used:
f = 5660 MHz; σ = 6.1 S/m; ε_r = 46.557; ρ = 1000 kg/m^3
Phantom section: Flat Section; Space: 0.0 cm

Test Date: 06-23-2014; Ambient Temp: 22.6°C; Tissue Temp: 23.0°C

Probe: EX3DV4 - SN3920; ConvF(3.62, 3.62, 3.62); Calibrated: 12/18/2013;
Sensor-Surface: 1.4mm (Mechanical Surface Detection)
Electronics: DAE4 Sn649; Calibrated: 12/12/2013
Phantom: SAM Sub; Type: SAM 4.0; Serial: TP-1357
Measurement SW: DASY4, Version 4.7 (80); SEMCAD X Version 14.6.10 (7164)

Mode: IEEE 802.11a, 5.5 GHz, Body SAR, Ch 132, 6 Mbps, Back Side, Ant 1

Area Scan (14x30x1): Measurement grid: dx=10mm, dy=10mm
Zoom Scan (8x8x7)/Cube 0: Measurement grid: dx=4mm, dy=4mm, dz=1.4mm; Graded Ratio: 1.4
Reference Value = 11.581 V/m; Power Drift = 0.13 dB
Peak SAR (extrapolated) = 4.59 W/kg
SAR(1 g) = 0.595 W/kg

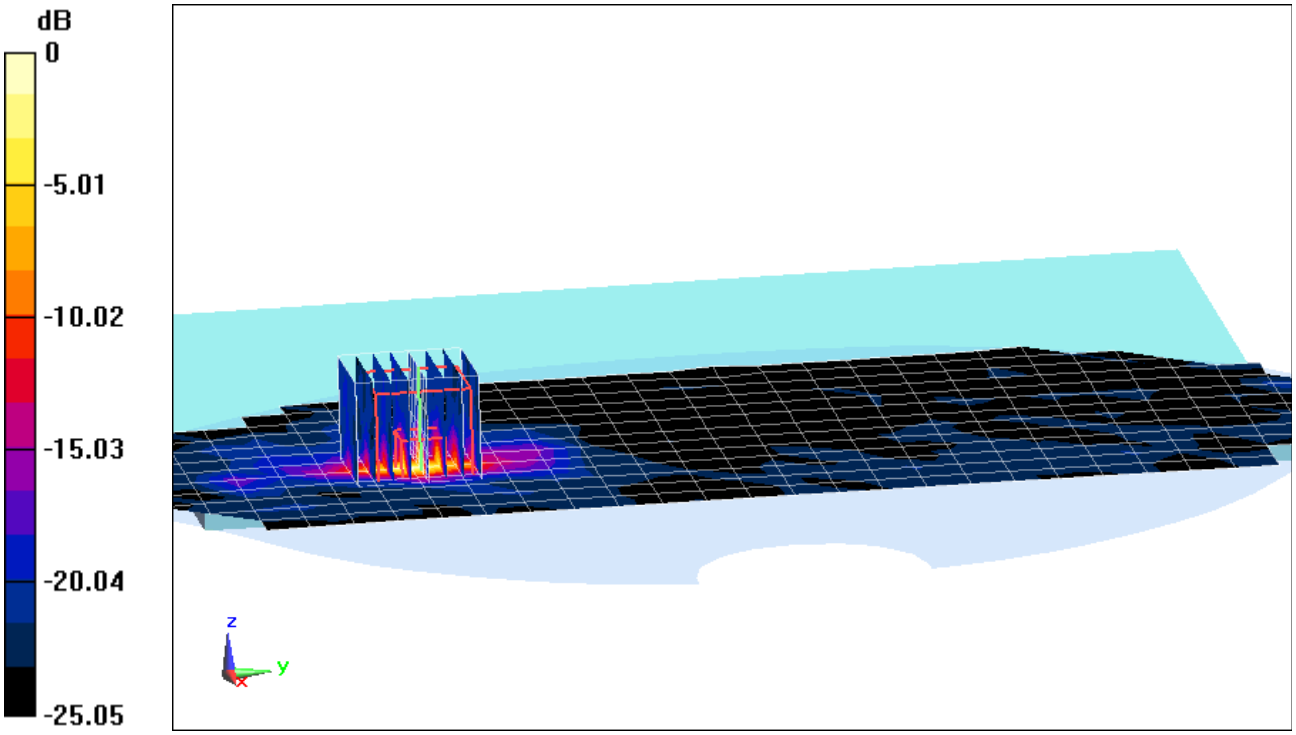

0 dB = 2.37 W/kg = 3.75 dBW/kg

PCTEST ENGINEERING LABORATORY, INC.

DUT: A3LSMT807R4; Type: Portable Tablet; Serial: FCC #7

Communication System: UID 0, Bluetooth; Frequency: 2480 MHz;Duty Cycle: 1:1
Medium: 2450 Body Medium parameters used (interpolated):
f = 2480 MHz; σ = 1.987 S/m; ε_r = 51.585; ρ = 1000 kg/m^3
Phantom section: Flat Section; Space: 0.0 cm

Test Date: 06-24-2014; Ambient Temp: 20.9°C; Tissue Temp: 21.4°C

Probe: ES3DV3 - SN3213; ConvF(4.26, 4.26, 4.26); Calibrated: 4/11/2014;
Sensor-Surface: 3mm (Mechanical Surface Detection)
Electronics: DAE4 Sn1364; Calibrated: 3/17/2014
Phantom: SAM Main; Type: SAM 4.0; Serial: TP-1406
Measurement SW: DASY4, Version 4.7 (80); SEMCAD X Version 14.6.10 (7164)

Mode: Bluetooth, Body SAR, Ch 78, 1 Mbps, Back Side

Area Scan (13x23x1): Measurement grid: dx=12mm, dy=12mm
Zoom Scan (7x7x7)/Cube 0: Measurement grid: dx=5mm, dy=5mm, dz=5mm
Reference Value = 0.884 V/m; Power Drift = -0.16 dB
Peak SAR (extrapolated) = 0.00800 W/kg
SAR(1 g) = 0.00132 W/kg

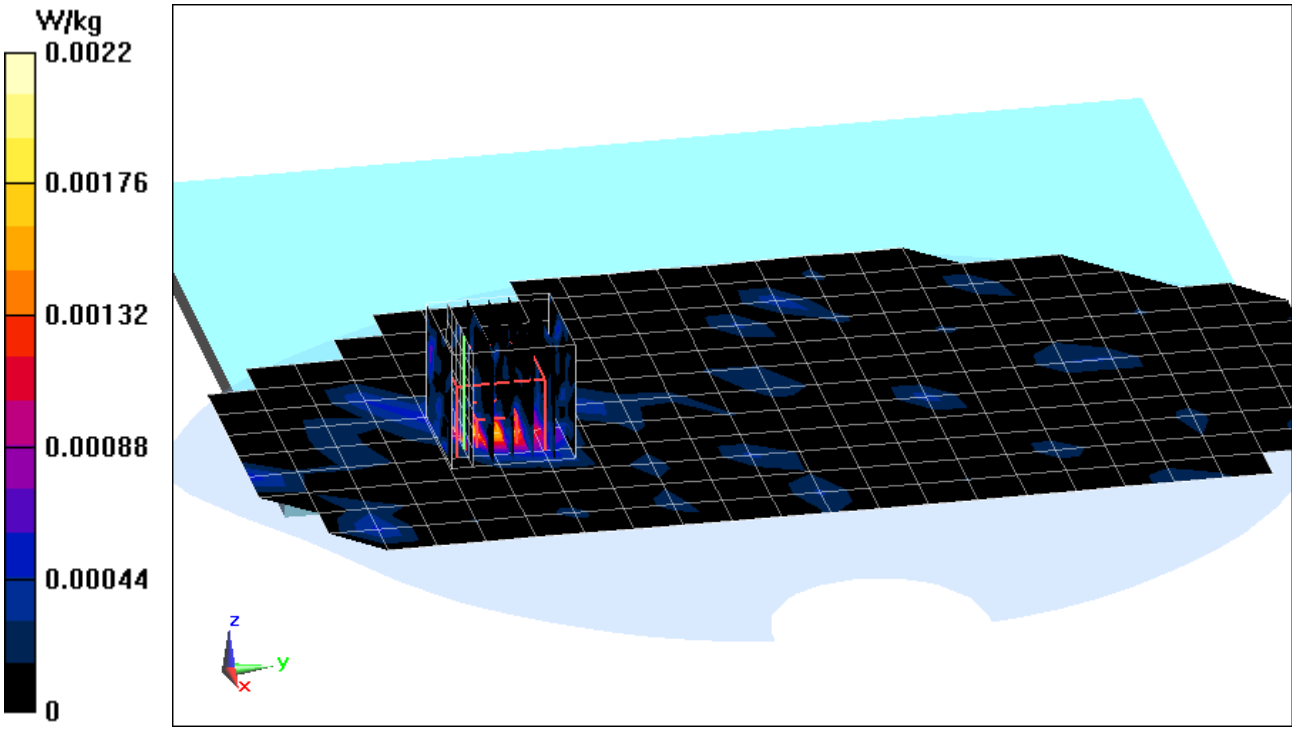

APPENDIX B: SYSTEM VERIFICATION

© 2014 PCTEST Engineering Laboratory, Inc.

PCTEST ENGINEERING LABORATORY, INC.

DUT: Dipole 750 MHz; Type: D750V3; Serial: 1003

Communication System: UID 0, CW; Frequency: 750 MHz; Duty Cycle: 1:1
Medium: 750 Body Medium parameters used (interpolated):
f = 750 MHz; σ = 0.969 S/m; ε_r = 53.997; ρ = 1000 kg/m^3
Phantom section: Flat Section; Space: 1.5 cm

Test Date: 08-12-2014; Ambient Temp: 23.2°C; Tissue Temp: 22.5°C

Probe: ES3DV3 - SN3332; ConvF(6.21, 6.21, 6.21); Calibrated: 11/25/2013;
Sensor-Surface: 3mm (Mechanical Surface Detection)
Electronics: DAE4 Sn1407; Calibrated: 11/18/2013
Phantom: ELI v5.0; Type: QDOVA001BB; Serial: 1226
Measurement SW: DASY52, Version 52.8 (8); SEMCAD X Version 14.6.10 (7331)

750 MHz System Verification

Area Scan (7x15x1): Measurement grid: dx=15mm, dy=15mm
Zoom Scan (5x5x7)/Cube 0: Measurement grid: dx=8mm, dy=8mm, dz=5mm
Input Power = 20 dBm (100 mW)
Peak SAR (extrapolated) = 1.33 W/kg
SAR(1 g) = 0.916 W/kg
Deviation = 4.45%

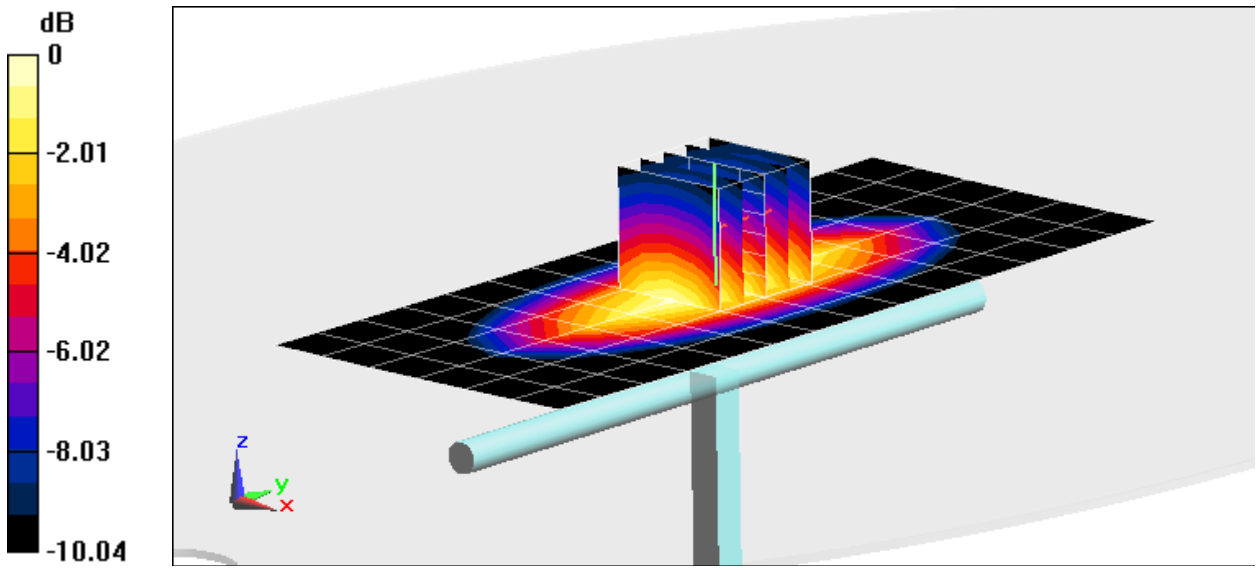

0 dB = 1.07 W/kg = 0.29 dBW/kg

PCTEST ENGINEERING LABORATORY, INC.

DUT: Dipole 835 MHz; Type: D835V2; Serial: 4d132

Communication System: UID 0, CW; Frequency: 835 MHz; Duty Cycle: 1:1
Medium: 835 Body Medium parameters used:
f = 835 MHz; σ = 0.957 S/m; ε_r = 55.241; ρ = 1000 kg/m^3
Phantom section: Flat Section; Space: 1.5 cm

Test Date: 08-18-2014; Ambient Temp: 23.4°C; Tissue Temp: 22.2°C

Probe: ES3DV3 - SN3288; ConvF(6.27, 6.27, 6.27); Calibrated: 9/23/2013;
Sensor-Surface: 3mm (Mechanical Surface Detection)
Electronics: DAE4 Sn1323; Calibrated: 9/17/2013
Phantom: SAM Sub Dasy B; Type: SAM 5.0; Serial: TP-1626
Measurement SW: DASY4, Version 4.7 (80); SEMCAD X Version 14.6.10 (7331)

835MHz System Verification

Area Scan (7x13x1): Measurement grid: dx=15mm, dy=15mm
Zoom Scan (5x5x7)/Cube 0: Measurement grid: dx=8mm, dy=8mm, dz=5mm
Input Power = 20 dBm (100 mW)
Peak SAR (extrapolated) = 1.42 W/kg
SAR(1 g) = 0.982 W/kg
Deviation = 2.51%

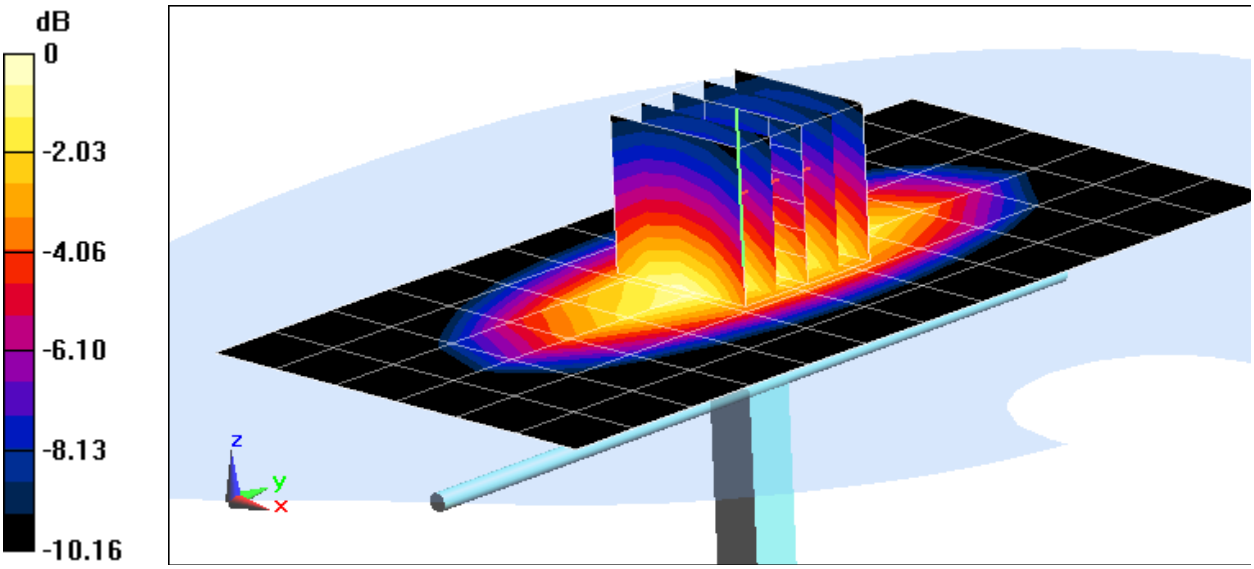

0 dB = 1.14 W/kg = 0.57 dBW/kg

PCTEST ENGINEERING LABORATORY, INC.

DUT: Dipole 1750 MHz; Type: D1765V2; Serial: 1008

Communication System: UID, CW; Frequency: 1750 MHz; Duty Cycle: 1:1
Medium: 1750 Body Medium parameters used:
f = 1750 MHz; σ = 1.448 S/m; ε_r = 52.043; ρ = 1000 kg/m^3
Phantom section: Flat Section; Space: 1.0 cm

Test Date: 08-14-2014; Ambient Temp: 23.6°C; Tissue Temp: 23.8°C

Probe: ES3DV3 - SN3332; ConvF(4.93, 4.93, 4.93); Calibrated: 11/25/2013;
Sensor-Surface: 3mm (Mechanical Surface Detection)
Electronics: DAE4 Sn1407; Calibrated: 11/18/2013
Phantom: ELI v5.0; Type: QDOVA001BB; Serial: 1226
Measurement SW: DASY52, Version 52.8 (8); SEMCAD X Version 14.6.10 (7331)

1750 MHz System Verification

Area Scan (7x9x1): Measurement grid: dx=15mm, dy=15mm
Zoom Scan (5x5x7)/Cube 0: Measurement grid: dx=8mm, dy=8mm, dz=5mm
Input Power = 20 dBm (100 mW)
Peak SAR (extrapolated) = 6.92 W/kg
SAR(1 g) = 4 W/kg
Deviation = 6.38%

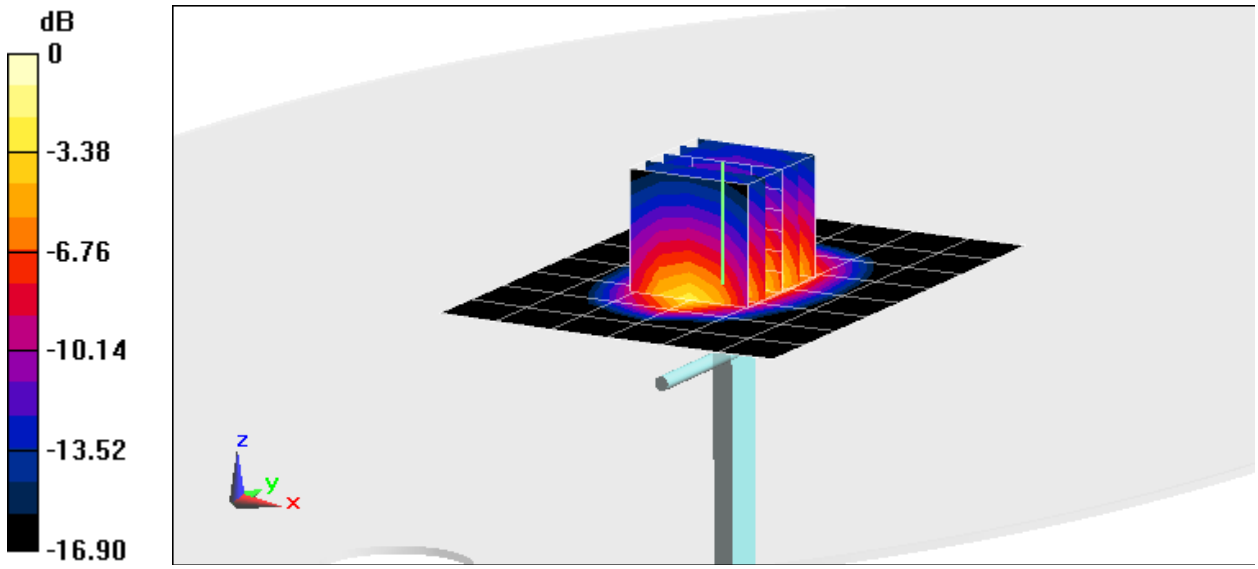

0 dB = 4.91 W/kg = 6.91 dBW/kg

PCTEST ENGINEERING LABORATORY, INC.

DUT: SAR Dipole 1900 MHz; Type: D1900V2; Serial: 5d148

Communication System: UID 0, CW; Frequency: 1900 MHz; Duty Cycle: 1:1
Medium: 1900 Body Medium parameters used (interpolated):
f = 1900 MHz; σ = 1.569 S/m; ε_r = 51.687; ρ = 1000 kg/m^3
Phantom section: Flat Section; Space: 1.0 cm

Test Date: 08-18-2014; Ambient Temp: 23.0°C; Tissue Temp: 22.2°C

Probe: ES3DV3 - SN3288; ConvF(4.82, 4.82, 4.82); Calibrated: 9/23/2013;
Sensor-Surface: 3mm (Mechanical Surface Detection)
Electronics: DAE4 Sn1323; Calibrated: 9/17/2013
Phantom: SAM with CRP; Type: SAM; Serial: TP1375
Measurement SW: DASY4, Version 4.7 (80); SEMCAD X Version 14.6.10 (7331)

1900MHz System Verification

Area Scan (5x7x1): Measurement grid: dx=15mm, dy=15mm
Zoom Scan (5x5x7)/Cube 0: Measurement grid: dx=8mm, dy=8mm, dz=5mm
Input Power = 20 dBm (100 mW)
Peak SAR (extrapolated) = 7.42 W/kg
SAR(1 g) = 4.21 W/kg
Deviation = 7.12 %

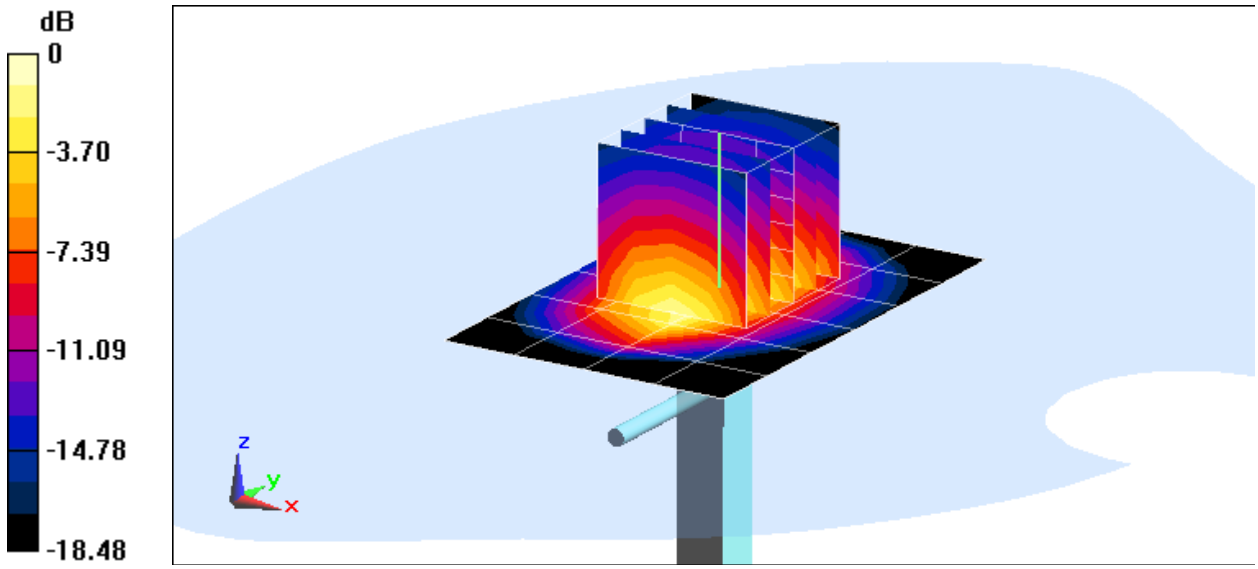

0 dB = 5.26 W/kg = 7.21 dBW/kg

PCTEST ENGINEERING LABORATORY, INC.

DUT: 1900MHz Dipole ; Type: D1900V2; Serial: 5d141

Communication System: UID 0, CW; Frequency: 1900 MHz; Duty Cycle: 1:1
Medium: 1900 Body Medium parameters used (interpolated):
f = 1900 MHz; σ = 1.525 S/m; ε_r = 51.94; ρ = 1000 kg/m^3
Phantom section: Flat Section; Space: 1.0 cm

Test Date: 08-28-2014; Ambient Temp: 23.5°C; Tissue Temp: 22.1°C

Probe: ES3DV3 - SN3319; ConvF(4.67, 4.67, 4.67); Calibrated: 4/17/2014;
Sensor-Surface: 3mm (Mechanical Surface Detection)
Electronics: DAE4 Sn1368; Calibrated: 4/11/2014
Phantom: ELI left; Type: QDOVA002AA; Serial: TP:1202
Measurement SW: DASY52, Version 52.8 (8); SEMCAD X Version 14.6.10 (7331)

1900 MHz System Verification

Area Scan (7x10x1): Measurement grid: dx=15mm, dy=15mm
Zoom Scan (5x5x7)/Cube 0: Measurement grid: dx=8mm, dy=8mm, dz=5mm
Input Power = 20 dBm (100 mW)
Peak SAR (extrapolated) = 6.80 W/kg
SAR(1 g) = 3.92 W/kg
Deviation = -3.45%

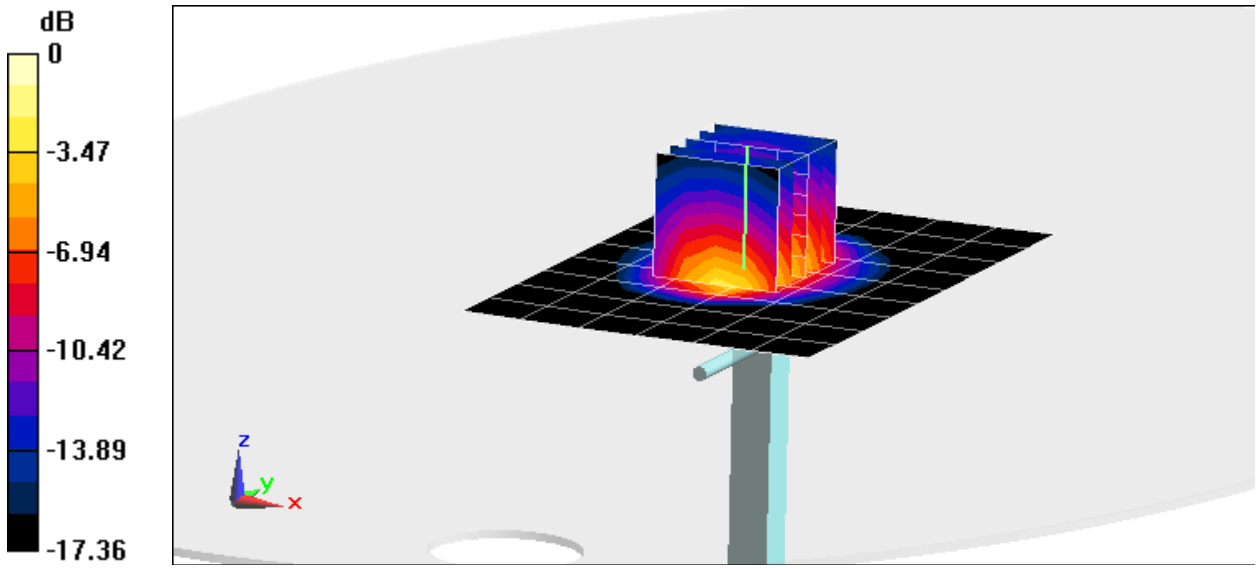

0 dB = 4.84 W/kg = 6.85 dBW/kg

PCTEST ENGINEERING LABORATORY, INC.

DUT: SAR Dipole 2450 MHz; Type: D2450V2; Serial: 719

Communication System: UID 0, CW; Frequency: 2450 MHz;Duty Cycle: 1:1
Medium: 2450 Body Medium parameters used:
f = 2450 MHz; σ = 1.949 S/m; ε_r = 51.693; ρ = 1000 kg/m^3
Phantom section: Flat Section; Space: 1.0 cm

Test Date: 06-24-2014; Ambient Temp: 20.9°C; Tissue Temp: 21.4°C

Probe: ES3DV3 - SN3213; ConvF(4.26, 4.26, 4.26); Calibrated: 4/11/2014;
Sensor-Surface: 3mm (Mechanical Surface Detection)
Electronics: DAE4 Sn1364; Calibrated: 3/17/2014
Phantom: SAM Main; Type: SAM 4.0; Serial: TP-1406
Measurement SW: DASY4, Version 4.7 (80); SEMCAD X Version 14.6.10 (7164)

2450MHz System Verification

Area Scan (6x9x1): Measurement grid: dx=12mm, dy=12mm
Zoom Scan (7x7x7)/Cube 0: Measurement grid: dx=5mm, dy=5mm, dz=5mm
Input Power = 20 dBm (100 mW)
Peak SAR (extrapolated) = 11.3 W/kg
SAR(1 g) = 5.36 W/kg
Deviation = 3.68%

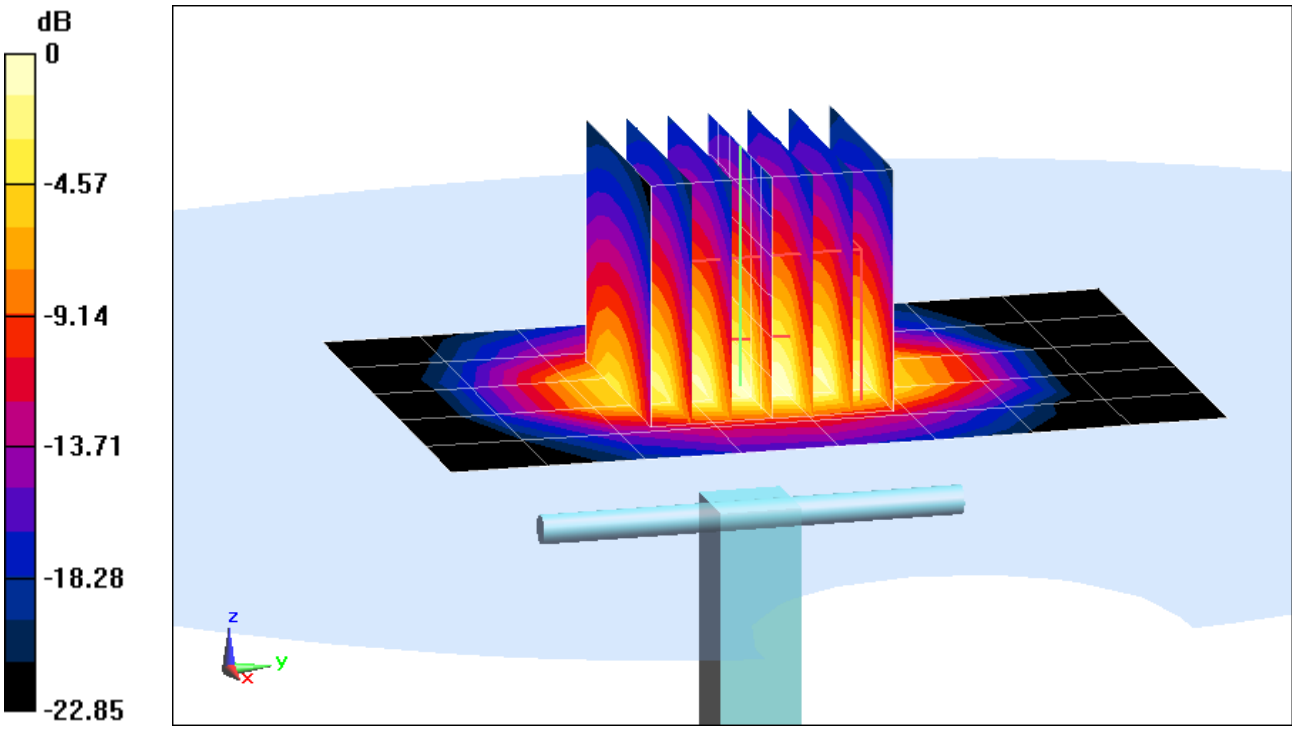

0 dB = 6.85 W/kg = 8.36 dBW/kg

PCTEST ENGINEERING LABORATORY, INC.

DUT: Dipole 5200 MHz; Type: D5GHzV2; Serial: 1007

Communication System: UID 0, CW; Frequency: 5200 MHz;Duty Cycle: 1:1
Medium: 5 GHz Body Medium parameters used:
f = 5200 MHz; σ = 5.5 S/m; ε_r = 47.385; ρ = 1000 kg/m^3
Phantom section: Flat Section; Space: 1.0 cm

Test Date: 06-23-2014; Ambient Temp: 22.5°C; Tissue Temp: 23.0°C

Probe: EX3DV4 - SN3920; ConvF(4.23, 4.23, 4.23); Calibrated: 12/18/2013;
Sensor-Surface: 1.4mm (Mechanical Surface Detection)
Electronics: DAE4 Sn649; Calibrated: 12/12/2013
Phantom: SAM Sub; Type: SAM 4.0; Serial: TP-1357
Measurement SW: DASY4, Version 4.7 (80); SEMCAD X Version 14.6.10 (7164)

5200MHz System Verification

Area Scan (7x9x1): Measurement grid: dx=10mm, dy=10mm
Zoom Scan (9x9x7)/Cube 0: Measurement grid: dx=4mm, dy=4mm, dz=1.4mm; Graded Ratio: 1.4
Input Power = 20 dBm (100 mW)
Peak SAR (extrapolated) = 32.5 W/kg
SAR(1 g) = 7.35 W/kg
Deviation = 1.24%

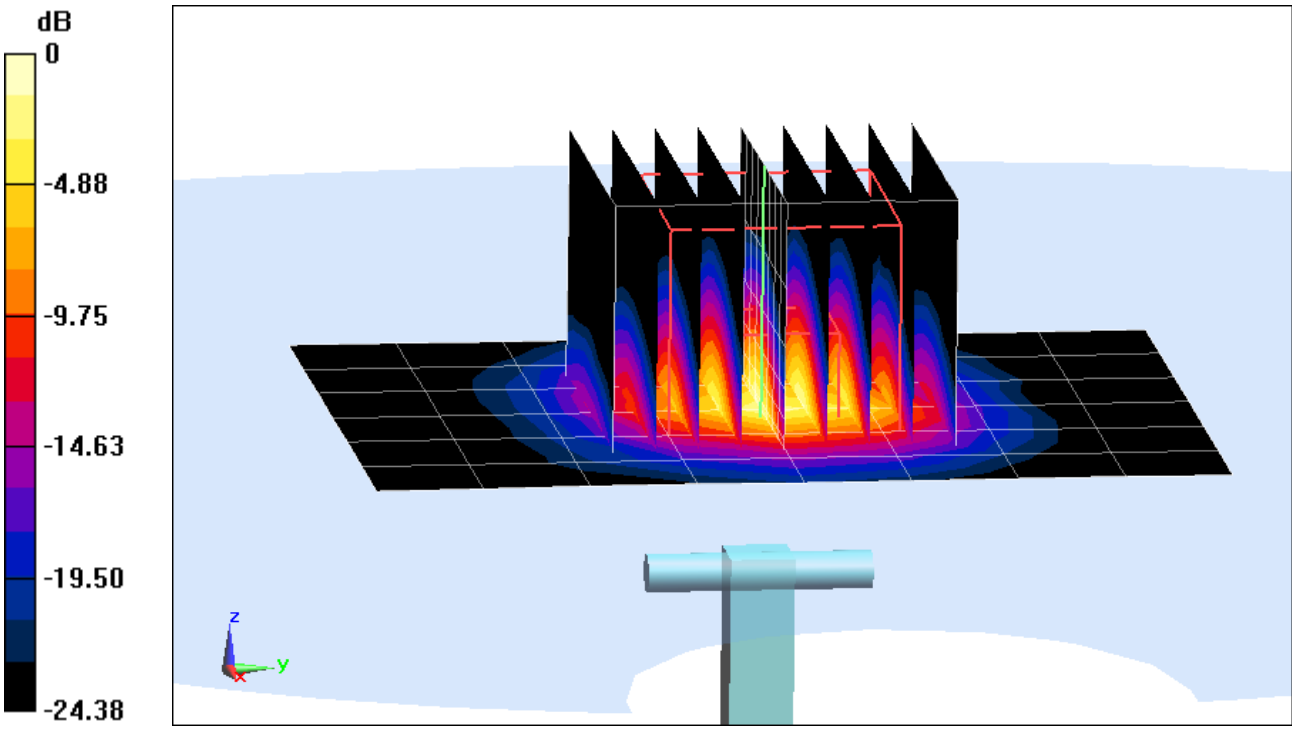

0 dB = 18.3 W/kg = 12.62 dBW/kg

PCTEST ENGINEERING LABORATORY, INC.

DUT: Dipole 5300 MHz; Type: D5GHzV2; Serial: 1007

Communication System: UID 0, CW; Frequency: 5300 MHz;Duty Cycle: 1:1
Medium: 5 GHz Body Medium parameters used:
f = 5300 MHz; σ = 5.62 S/m; ε_r = 47.117; ρ = 1000 kg/m^3
Phantom section: Flat Section; Space: 1.0 cm

Test Date: 06-23-2014; Ambient Temp: 22.6°C; Tissue Temp: 23.0°C

Probe: EX3DV4 - SN3920; ConvF(4.11, 4.11, 4.11); Calibrated: 12/18/2013;
Sensor-Surface: 1.4mm (Mechanical Surface Detection)
Electronics: DAE4 Sn649; Calibrated: 12/12/2013
Phantom: SAM Sub; Type: SAM 4.0; Serial: TP-1357
Measurement SW: DASY4, Version 4.7 (80); SEMCAD X Version 14.6.10 (7164)

5300MHz System Verification

Area Scan (7x9x1): Measurement grid: dx=10mm, dy=10mm
Zoom Scan (9x9x7)/Cube 0: Measurement grid: dx=4mm, dy=4mm, dz=1.4mm; Graded Ratio: 1.4
Input Power = 20 dBm (100 mW)
Peak SAR (extrapolated) = 33.0 W/kg
SAR(1 g) = 7.22 W/kg
Deviation -3.35%

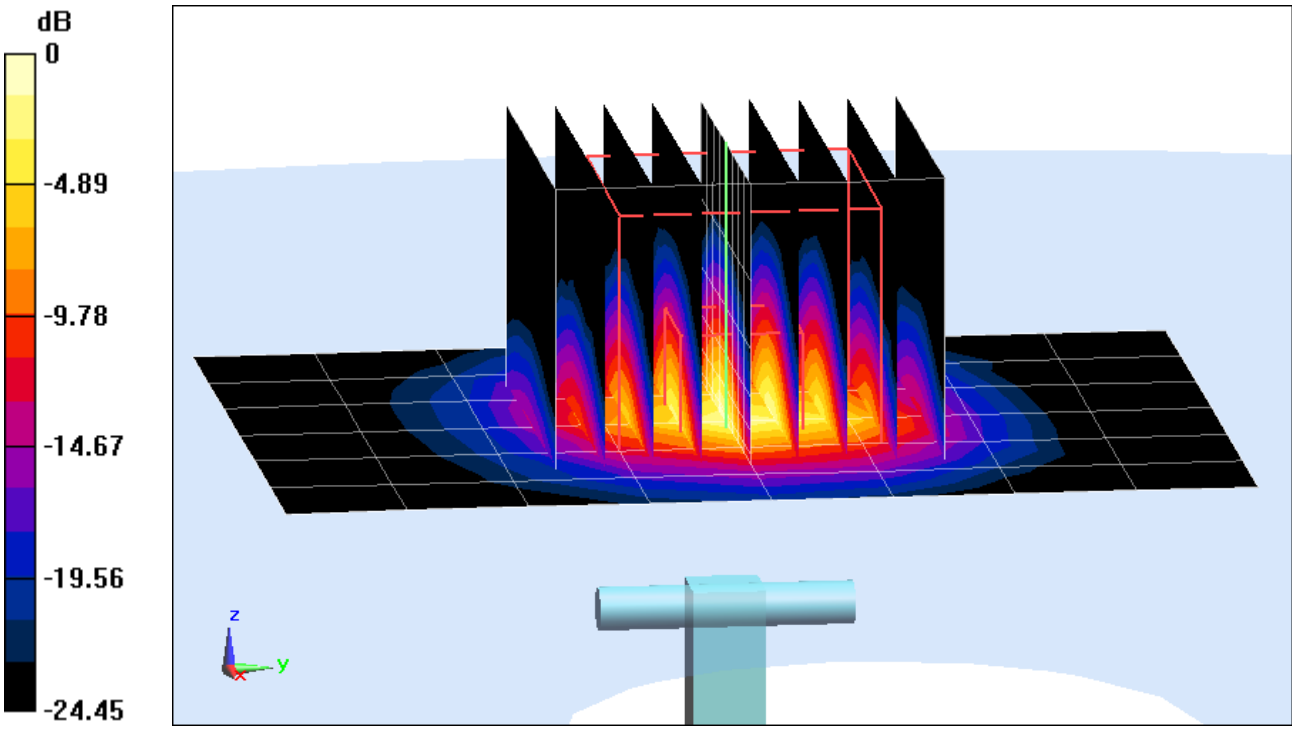

0 dB = 18.1 W/kg = 12.58 dBW/kg

PCTEST ENGINEERING LABORATORY, INC.

DUT: Dipole 5500 MHz; Type: D5GHzV2; Serial: 1007

Communication System: UID 0, CW; Frequency: 5500 MHz;Duty Cycle: 1:1
Medium: 5 GHz Body Medium parameters used:
f = 5500 MHz; σ = 5.873 S/m; ε_r = 46.816; ρ = 1000 kg/m^3
Phantom section: Flat Section; Space: 1.0 cm

Test Date: 06-23-2014; Ambient Temp: 22.6°C; Tissue Temp: 23.0°C

Probe: EX3DV4 - SN3920; ConvF(3.8, 3.8, 3.8); Calibrated: 12/18/2013;
Sensor-Surface: 1.4mm (Mechanical Surface Detection)
Electronics: DAE4 Sn649; Calibrated: 12/12/2013
Phantom: SAM Sub; Type: SAM 4.0; Serial: TP-1357
Measurement SW: DASY4, Version 4.7 (80); SEMCAD X Version 14.6.10 (7164)

5500MHz System Verification

Area Scan (7x9x1): Measurement grid: dx=10mm, dy=10mm
Zoom Scan (9x9x7)/Cube 0: Measurement grid: dx=4mm, dy=4mm, dz=1.4mm; Graded Ratio: 1.4
Input Power = 20 dBm (100 mW)
Peak SAR (extrapolated) = 34.9 W/kg
SAR(1 g) = 7.53 W/kg
Deviation = -0.79%

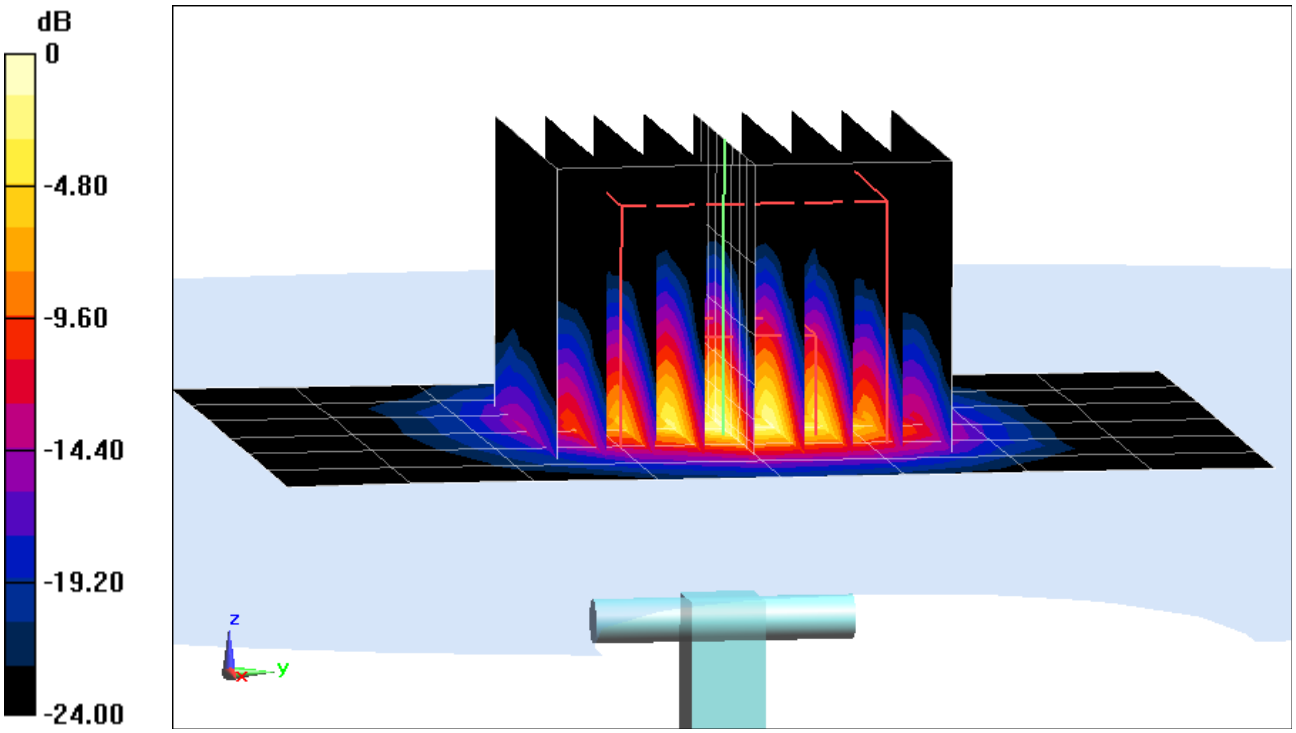

0 dB = 19.4 W/kg = 12.88 dBW/kg

PCTEST ENGINEERING LABORATORY, INC.

DUT: Dipole 5600 MHz; Type: D5GHzV2; Serial: 1007

Communication System: UID 0, CW; Frequency: 5600 MHz;Duty Cycle: 1:1
Medium: 5 GHz Body Medium parameters used:
f = 5600 MHz; σ = 6.009 S/m; ε_r = 46.678; ρ = 1000 kg/m^3
Phantom section: Flat Section; Space: 1.0 cm

Test Date: 06-23-2014; Ambient Temp: 22.6°C; Tissue Temp: 23.0°C

Probe: EX3DV4 - SN3920; ConvF(3.62, 3.62, 3.62); Calibrated: 12/18/2013;
Sensor-Surface: 1.4mm (Mechanical Surface Detection)
Electronics: DAE4 Sn649; Calibrated: 12/12/2013
Phantom: SAM Sub; Type: SAM 4.0; Serial: TP-1357
Measurement SW: DASY4, Version 4.7 (80); SEMCAD X Version 14.6.10 (7164)

5600MHz System Verification

Area Scan (7x9x1): Measurement grid: dx=10mm, dy=10mm
Zoom Scan (9x9x7)/Cube 0: Measurement grid: dx=4mm, dy=4mm, dz=1.4mm; Graded Ratio: 1.4
Input Power = 20 dBm (100 mW)
Peak SAR (extrapolated) = 36.2 W/kg
SAR(1 g) = 7.84 W/kg
Deviation = 1.42%

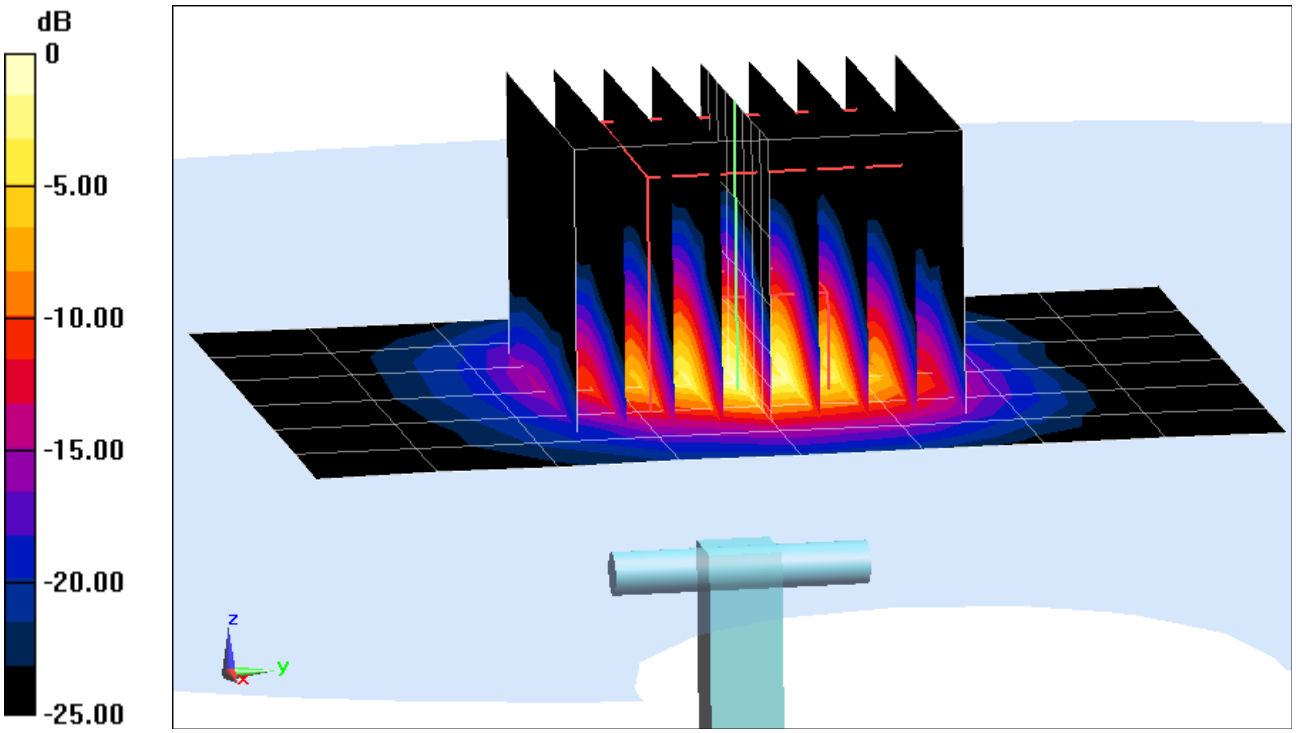

0 dB = 20.0 W/kg = 13.01 dBW/kg

PCTEST ENGINEERING LABORATORY, INC.

DUT: Dipole 5800 MHz; Type: D5GHzV2; Serial: 1007

Communication System: UID 0, CW; Frequency: 5800 MHz;Duty Cycle: 1:1
Medium: 5 GHz Body Medium parameters used:
f = 5800 MHz; σ = 6.287 S/m; ε_r = 46.323; ρ = 1000 kg/m^3
Phantom section: Flat Section; Space: 1.0 cm

Test Date: 06-23-2014; Ambient Temp: 22.6°C; Tissue Temp: 22.9°C

Probe: EX3DV4 - SN3920; ConvF(4, 4, 4); Calibrated: 12/18/2013;
Sensor-Surface: 1.4mm (Mechanical Surface Detection)
Electronics: DAE4 Sn649; Calibrated: 12/12/2013
Phantom: SAM Sub; Type: SAM 4.0; Serial: TP-1357
Measurement SW: DASY4, Version 4.7 (80); SEMCAD X Version 14.6.10 (7164)

5800MHz System Verification

Area Scan (7x9x1): Measurement grid: dx=10mm, dy=10mm
Zoom Scan (9x9x7)/Cube 0: Measurement grid: dx=4mm, dy=4mm, dz=1.4mm; Graded Ratio: 1.4
Input Power = 20 dB (100 mW)
Peak SAR (extrapolated) = 34.2 W/kg
SAR(1 g) = 7.06 W/kg
Deviation = -3.16%

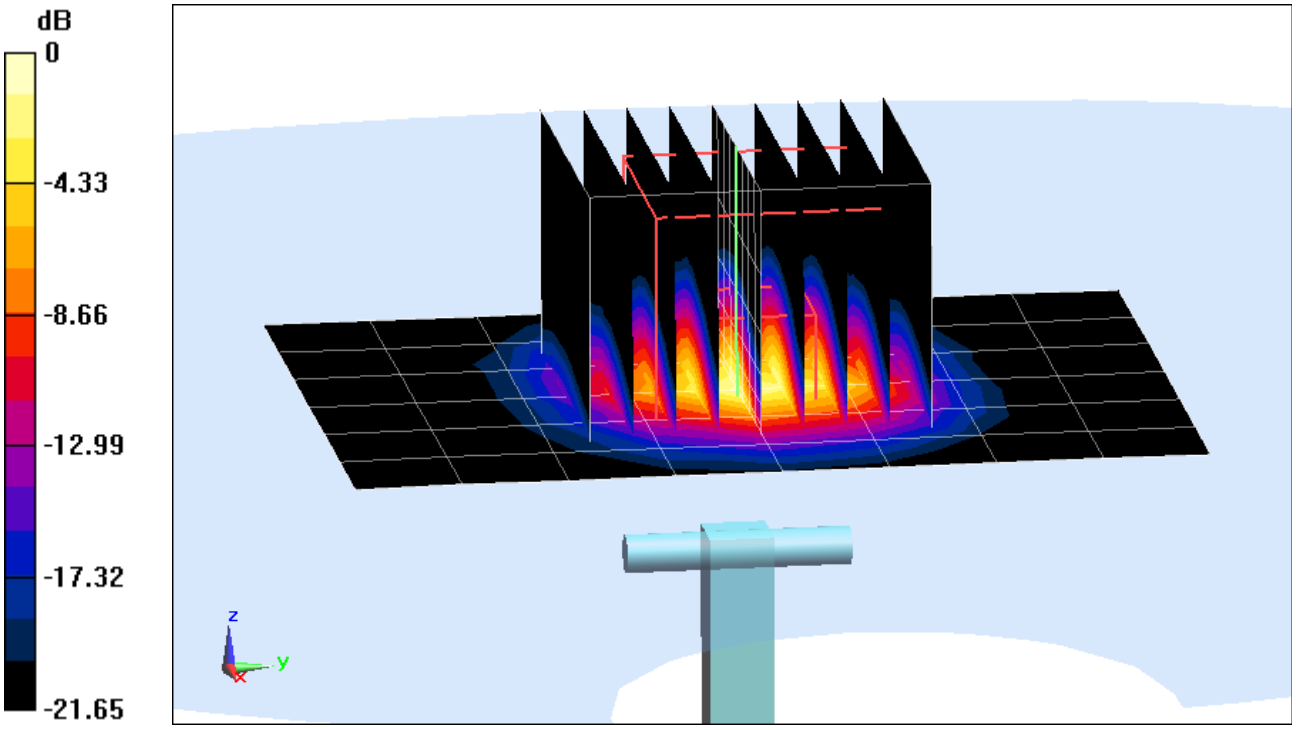

0 dB = 18.1 W/kg = 12.58 dBW/kg