This document is watermarked because certain important information in the document has not yet been verified.
This document has been sent to you as a draft and for informational purposes only.
The document should only be used for internal purposes and may not be distributed outside of the company.
Distributing the document outside of the company could result in legal exposure to the company if the preliminary, unverified information in the draft turns out to be inaccurate.

SAMSUNG

Galaxy Tab S2

TABLET

User Manual

Please read this manual before operating your device
and keep it for future reference.

DRAFT
FOR INTERNAL USE ONLY

SAMSUNG

Legal Notices

WARNING! This product contains chemicals known to the State of California to cause cancer, birth defects, or other reproductive harm. For more information, please call 1-800-SAMSUNG (726-7864).

Intellectual Property

All Intellectual Property, as defined below, owned by or which is otherwise the property of Samsung or its respective suppliers relating to the SAMSUNG mobile device, including but not limited to, accessories, parts, or software relating thereto (the "mobile device"), is proprietary to Samsung and protected under federal laws, state laws, and international treaty provisions. Intellectual Property includes, but is not limited to, inventions (patentable or unpatentable), patents, trade secrets, copyrights, software, computer programs, and related documentation and other works of authorship. You may not infringe or otherwise violate the rights secured by the Intellectual Property. Moreover, you agree that you will not (and will not attempt to) modify, prepare derivative works of, reverse engineer, decompile, disassemble, or otherwise attempt to create source code from the software. No title to or ownership in the Intellectual Property is transferred to you. All applicable rights of the Intellectual Property shall remain with SAMSUNG and its suppliers.

Open Source Software

Some software components of this product incorporate source code covered under GNU General Public License (GPL), GNU Lesser General Public License (LGPL), OpenSSL License, BSD License and other open source licenses. To obtain the source code covered under the open source licenses, please visit: opensource.samsung.com

Disclaimer of Warranties; Exclusion of Liability

EXCEPT AS SET FORTH IN THE EXPRESS WARRANTY CONTAINED ON THE WARRANTY PAGE ENCLOSED WITH THE PRODUCT, THE PURCHASER TAKES THE PRODUCT "AS IS", AND SAMSUNG MAKES NO EXPRESS OR IMPLIED WARRANTY OF ANY KIND WHATSOEVER WITH RESPECT TO THE PRODUCT, INCLUDING BUT NOT LIMITED TO THE MERCHANTABILITY OF THE PRODUCT OR ITS FITNESS FOR ANY PARTICULAR PURPOSE OR USE; THE DESIGN, CONDITION OR QUALITY OF THE PRODUCT; THE PERFORMANCE OF THE PRODUCT; THE WORKMANSHIP OF THE PRODUCT OR THE COMPONENTS CONTAINED THEREIN; OR COMPLIANCE OF THE PRODUCT WITH THE REQUIREMENTS OF ANY LAW, RULE, SPECIFICATION OR CONTRACT PERTAINING THERETO. NOTHING CONTAINED IN THE INSTRUCTION MANUAL SHALL BE CONSTRUED TO CREATE AN EXPRESS OR IMPLIED WARRANTY OF ANY KIND WHATSOEVER WITH RESPECT TO THE PRODUCT. IN ADDITION, SAMSUNG SHALL NOT BE LIABLE FOR ANY DAMAGES OF ANY KIND RESULTING FROM THE PURCHASE OR USE OF THE PRODUCT OR ARISING FROM THE BREACH OF THE EXPRESS WARRANTY, INCLUDING INCIDENTAL, SPECIAL OR CONSEQUENTIAL DAMAGES, OR LOSS OF ANTICIPATED PROFITS OR BENEFITS.

Modification of Software

SAMSUNG IS NOT LIABLE FOR PERFORMANCE ISSUES OR INCOMPATIBILITIES CAUSED BY YOUR EDITING OF REGISTRY SETTINGS, OR YOUR MODIFICATION OF OPERATING SYSTEM SOFTWARE.

USING CUSTOM OPERATING SYSTEM SOFTWARE MAY CAUSE YOUR DEVICE AND APPLICATIONS TO WORK IMPROPERLY. YOUR CARRIER MAY NOT PERMIT USERS TO DOWNLOAD CERTAIN SOFTWARE, SUCH AS CUSTOM OS.

DRAFT
FOR INTERNAL USE ONLY

Samsung KNOX

Samsung KNOX™ is Samsung's security platform and is a mark for a Samsung device tested for security with enterprise use in mind. Additional licensing fee may be required. For more information about KNOX, please refer to: samsung.com/us/knox [061616]

Samsung Electronics America (SEA), Inc.

Address:
85 Challenger Road
Ridgefield Park,
New Jersey 07660

Phone:
1-800-SAMSUNG (726-7864)

Internet Address:
samsung.com

©2016 Samsung Electronics America, Inc.
Samsung, Samsung Galaxy, Multi Window, and Samsung Milk Music are all trademarks of Samsung Electronics Co., Ltd.

Other marks are the property of their respective owners.

Note: Screen images are simulated. Appearance of device may vary.

Do you have questions about your Samsung Mobile Device?

For 24 hour information and assistance, we offer a new FAQ/ARS System (Automated Response System) at: samsung.com/us/support

The actual available capacity of the internal memory is less than the specified capacity because the operating system and default applications occupy part of the memory. The available capacity may change when you upgrade the device.

Legal Information

Important legal information can be accessed in writing on the mobile device or at samsung.com

READ THIS INFORMATION BEFORE USING YOUR MOBILE DEVICE.

Samsung Limited Warranty - This product is covered under the applicable Samsung Limited Warranty **INCLUDING ITS DISPUTE RESOLUTION PROCEDURE and your right to opt out of arbitration within 30 calendar days of the first consumer purchase. You may opt out by either sending an email to optout@sea.samsung.com with the subject line "Arbitration Opt-Out" or by calling 1-800-SAMSUNG (726-7864).** For more detailed procedures, please refer to the "Dispute Resolution Procedures and Arbitration and Opt-Out" section of the Limited Warranty.

Full written terms and detailed information about the warranty and obtaining service are available on the device at: **Settings** > **About device** > **Legal information** > **Samsung legal** or you may access the online version of the Health/Safety and Warranty guide for your device at:

English
samsung.com/us/Legal/Tablet-HSGuide

Spanish
samsung.com/us/Legal/Tablet-HSGuide-SP

The online version of the **End User License Agreement (EULA)** for your device can be found online at:
samsung.com/us/Legal/SamsungLegal-EULA4

DRAFT
FOR INTERNAL USE ONLY

Table of Contents

Getting Started 1

Front View 2

Back View 3

Assemble Your Device 4

Set Up Your Device 6

Set Up Accounts on Your Device 7

Know Your Device 8

Home Screen 9

Status Bar 12

Navigation 13

Notification Panel 15

Multi Window 17

Enter Text 19

Applications 21

Apps List 22

Google Apps 24

T-Mobile Apps 26

Additional Apps 27

Calculator 29

Calendar 30

Camera and Video 32

Clock 35

Contacts 37

Email 40

Galaxy Apps 42

Gallery 43

Internet 45

Memo 47

Messages 48

Music Player 50

My Files 52

Video Player 53

Settings 55

How to Use Settings 56

Wi-Fi 57

Bluetooth 59

Airplane Mode 61

Mobile HotSpot and Tethering 62

Data Usage 64

Mobile Networks 65

More Connection Settings 66

Smart Manager 68

Applications Settings 69

Sounds and Vibrations 71

Notifications 74

Display Settings 75

Advanced Features 77

Users 78

Wallpaper 79

Home Screen Settings 80

Lock Screen and Security 81

Privacy 85

Accessibility 87

DRAFT
FOR INTERNAL USE ONLY

Accounts....89
Google Settings....90
Backup and Reset....91
Language and Input....93
Battery....95
Storage....96
Accessories....98
Date and Time....99
Help....100
About Device....101

DRAFT
FOR INTERNAL USE ONLY

Getting Started

Learn about your mobile device hardware, assembly procedures, and how to get started using your new device.

DRAFT
FOR INTERNAL USE ONLY

Front View

- **Front camera**: Take self-portraits and record videos of yourself.
- **Power key**: Press and hold to turn the device on or off or to restart it. Press to lock or wake up the screen.
- **Volume key**: Adjust the volume of your device's sounds and audio playback.
- **Microphone**: Records audio and detects voice commands.
- **Back**: Return to the previous screen, or close a dialog box, menu, or keyboard.
- **USB charger/Accessory port**: Connect the USB charger (included) and other optional accessories (not included).
- **Home key/Finger scanner**: Return to the Home screen. Activate the Fingerprint security feature.
- **Recent**: Tap to display recent apps, or touch and hold for Multi window™.
- **Proximity sensors**: Detect the presence of objects near the device.

DRAFT
FOR INTERNAL USE ONLY

Back View

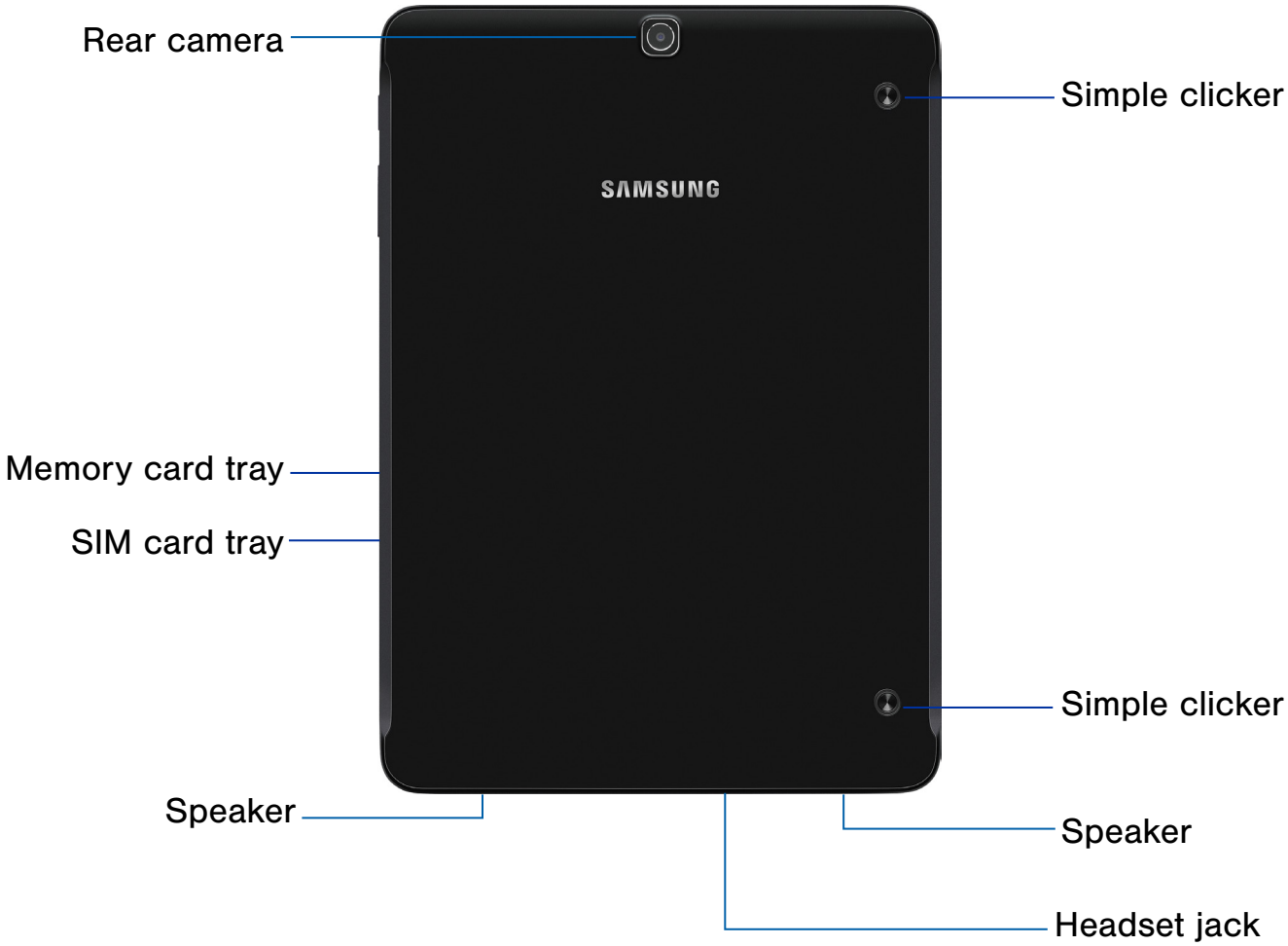

- **Simple clicker**: Securely attach optional covers (not included) to these retractable attachment points.
- **Speaker**: Play music and other sounds.
- **Headset jack**: Connect an optional headset (not included).
- **SIM card tray**: Install the SIM card here. For more information, see Install the Nano SIM Card.
- **Memory card tray**: Install an optional memory card (not included) for storage of files.
- **Rear camera**: Take pictures and record videos.

DRAFT
FOR INTERNAL USE ONLY

Assemble Your Device

This section helps you to assemble your device.

Install the Nano SIM Card

When you subscribe to a cellular network, you are provided with a plug-in SIM card. During activation, your SIM card is loaded with your subscription details, such as your Personal Identification Number (PIN), available optional services, and other features.

Warning: Please be careful when handling the SIM card to avoid damaging it. Keep all SIM cards out of reach of small children.

Caution: Exercise care when using the removal tool to eject the internal SIM card tray.

1. Insert the removal tool into the hole on the SIM card tray, and then push until the tray pops out.
2. Place the SIM card on the tray.
   - Make sure that the card's gold contacts face down into the device and that the card is positioned as shown.

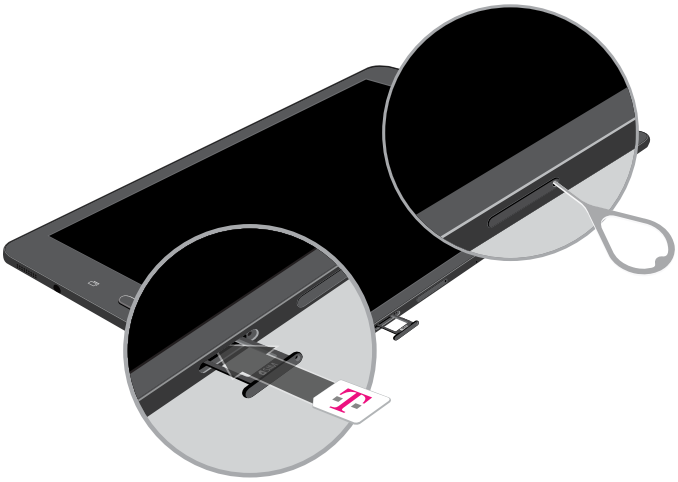

3. Slide the SIM card tray back into the slot.

Caution: If the SIM card is not inserted correctly, the device cannot detect it. Reorient the SIM card and place it back into the slot if it is not detected.

Install an Optional Memory Card

You can install an optional microSD™ or microSDHC™ memory card (not included) to add more memory space to your device.

Note: A memory card can be installed at any time; it is not necessary to install it prior to using the device.

For more information on installing a memory card, see Memory Card (SD Card).

1. Insert the removal tool into the hole on the memory card tray, and then push until the tray pops out.
2. Place the memory card on the tray, positioned as shown.

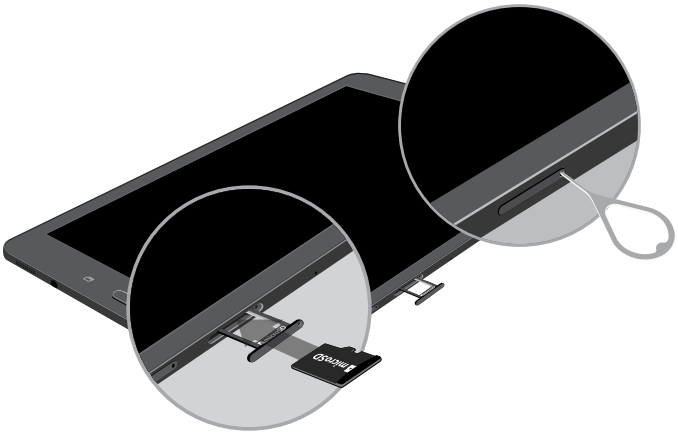

3. Slide the tray back into the slot.

Caution: If the memory card is not inserted correctly, the device cannot detect it. Reorient the memory card and place it back into the slot if it is not detected.

DRAFT
FOR INTERNAL USE ONLY

Charge the Battery

Your device is powered by a rechargeable, standard Li-Ion battery. A USB charger (charging head and USB cable) is included with the device for charging the battery from any standard outlet.

The battery comes partially charged. A fully discharged battery requires up to four hours of charge time. You can use the device while charging.

Note: It is recommended you fully charge the battery before using your device for the first time.

Caution: Use only charging devices and batteries approved by Samsung. Samsung accessories are designed for your device to maximize battery life. Using other accessories may invalidate your warranty and may cause damage.

1. Insert the USB cable into the USB charger/ Accessory port.

2. Connect the USB cable to the charging head, and then plug the charging head into a standard outlet.
3. Unplug the charging head from the outlet and remove the USB cable from the device when charging is complete.

When to Charge the Battery

When the battery is low and only a few minutes of operation remain, the device sounds a warning tone at regular intervals.

In this condition, your device conserves its remaining battery power by dimming the screen.

When the battery level becomes too low, the device automatically turns off.

For a quick check of your battery level:

► View the battery charge indicator located in the top right corner of your device's display. A solid color ( ) indicates a full charge.

You can also choose to display a percentage value. Viewing a percentage value can provide a better idea of the remaining charge on the battery. For more information, see Battery.

DRAFT
FOR INTERNAL USE ONLY

Set Up Your Device

Turn Your Device On or Off

The instructions below explain how to turn your device on or off.

Turn the Device On

To turn the device on:

► Press and hold the **Power** key until the device turns on.

Turn the Device Off

To turn the device off:

1. Press and hold the **Power** key until the device options screen is displayed.
2. Tap **Power off**, and confirm if prompted.

Restart the Device

If your device stops responding to taps or finger gestures and you are unable to turn it off, you can restart your device.

► Press and hold the **Power** key and the **Volume down** key at the same time for more than seven seconds.

Initial Set Up

The first time you turn your device on, a Welcome screen is displayed. It guides you through the basics of setting up your device.

Follow the prompts to choose a default language, connect to a Wi-Fi® network, set up accounts, choose location services, learn about your device's features, and more.

Note: Voice Assistant provides voice prompts and descriptions of items on the screen to improve accessibility. During setup, you can enable or disable Voice Assistant by pressing the **Home** key quickly three times.

Secure Your Device

Use your device's screen lock features to secure your device.

Lock the Device

By default, the device locks automatically when the screen times out.

To lock the device:

► Press the **Power** key.

Unlock the Device

The default Screen lock on your device is Swipe.

Note: To choose a more secure screen lock, see Set a Screen Lock.

To unlock the device:

► Press the **Power** key or **Home** key, and then drag your finger across the screen.

DRAFT
FOR INTERNAL USE ONLY

Set Up Accounts on Your Device

Samsung Account

Create a Samsung account for access to Samsung content and apps on your device. When you turn on your device for the first time, set up your existing Samsung account or create a new Samsung account.

– or –

To create a new Samsung account or set up your Samsung account on your device at any time, use Accounts settings. For more information, see Accounts.

1. From a Home screen, tap **Apps** > **Settings** > **Accounts**.
2. Tap **Add account** > **Samsung account**.

Google Account

Your new device uses your Google™ Account to fully utilize its Android™ features, including Gmail™, Google Hangouts™, and the Google Play™ store.

When you turn on your device for the first time, set up your existing Google Account or create a new Google Account.

– or –

To create a new Google Account or set up your Google Account on your device at any time, use Accounts settings. For more information, see Accounts.

1. From a Home screen, tap **Apps** > **Settings** > **Accounts**.
2. Tap **Add account** > **Google**.

Factory Reset Protection

When you sign in to a Google Account on your device, Factory Reset Protection is turned on. Factory Reset Protection (FRP) prevents other people from using your device if it is reset to factory settings without your permission. For example, if your device is lost or stolen and a factory data reset is performed, only someone with your Google Account username and password can use the device.

You will not be able to access the device after a factory data reset if you do not have your Google Account username and password. For more information, see Factory Data Reset.

Caution: You should remove your Google Account before shipping your device to Samsung or any other service provider for service and before resetting the device to factory settings.

Enable Factory Reset Protection

Adding a Google Account to your device automatically turns on the Factory Reset Protection (FRP) security feature. For more information, see google.com.

Disable Factory Reset Protection

To disable FRP, remove all Google Accounts from the device.

1. From a Home screen, tap **Apps** > **Settings**.
2. Tap **Accounts** > **Google**.
   - If you have more than one Google Account set up on your device, tap the Google Account you want to remove.
3. Tap **More** > **Remove account**.

DRAFT
FOR INTERNAL USE ONLY

Know Your Device

Learn some of the key features of your mobile device, including the screens and icons, as well as how to navigate the device and enter text using the keyboard.

Warning: Please note that a touch screen responds best to a light touch from the pad of your finger or a capacitive stylus. Using excessive force or a metallic object when pressing on the touch screen may damage the tempered glass surface and void the warranty.

DRAFT
FOR INTERNAL USE ONLY

Home Screen

The Home screen is the starting point for using your device.

- **Status bar**: Displays device status icons (right) and notification icons (left). For more information, see Status Bar.
- **App folder**: Groups multiple apps into a folder.
- **Apps list**: Allows quick access to all of your applications.
- **Primary app shortcuts**: Displays these shortcuts on all Home screens.
- **Home screen indicator**: Indicates which Home screen is currently visible.
- **App shortcuts**: Launches your favorite applications.
- **Widget**: Runs as a simple application extension (not a shortcut) on a Home screen.

DRAFT
FOR INTERNAL USE ONLY

Customize your Home screens by adding application shortcuts, widgets, folders, and custom wallpapers.

To access Home screen manager:

► From a Home screen, pinch the screen.

– or –

Touch and hold an empty space on the screen.

Manage Home Screens

Your device comes with multiple Home screens to hold app shortcuts and widgets. You can add, remove, change the order of screens, as well as choose a different main Home screen.

1. From a Home screen, pinch the screen.
2. Use these options to manage screens:
   - **Add a screen**: Swipe to the end of the screens, and then tap **Add**.
   - **Remove a screen**: Touch and hold a screen, and then drag it to **Remove**.
   - **Set a screen as the main Home screen**: Tap **Main Home screen** at the top of a screen. This screen is displayed when you press the **Home** key.
   - **Change the order of screens**: Touch and hold a screen, and then drag it to a new position.
   - **Flipboard Briefing**: Swipe to the left of the screens to find the Flipboard Briefing screen. To enable or disable this feature, tap **On/Off** at the top of the screen.

Wallpapers

Change the look of the Home and Lock screens with wallpaper. You can display a favorite picture or choose from preloaded wallpapers.

1. From a Home screen, pinch the screen.
2. Tap **Wallpapers** to customize.

For more information, see Wallpaper.

To access Wallpaper settings:

► From a Home screen, tap **Apps** > **Settings** > **Wallpaper**.

Widgets

Widgets are simple application extensions that run on a Home screen. There are many kinds of widgets, including links to a specific contact, Internet bookmarks, Gmail and email accounts, and many others.

Add a Widget to a Home Screen

You can add a widget to a Home screen.

1. From a Home screen, pinch the screen.
2. Tap **Widgets**.
3. Touch and hold a widget, drag it to a Home screen, and release it.

Remove a Widget

You can remove a widget that you added to a Home screen.

1. From a Home screen, touch and hold a widget to release it.
2. Drag the widget to **Remove** and release it.

Note: Removing a widget does not delete the widget, it just removes the widget from the Home screen.

DRAFT
FOR INTERNAL USE ONLY

App Shortcuts

You can use app shortcuts to launch an app from any Home screen.

Add a Shortcut to a Home Screen

You can add a shortcut to a Home screen.

1. From a Home screen, tap **Apps**.
2. Touch and hold an app shortcut, drag it to a Home screen, and then release it.

Remove a Shortcut

You can remove a shortcut that you added to a Home screen.

1. Touch and hold an app shortcut to release it.
2. Drag the app shortcut to **Remove** and release it.

Note: Removing a shortcut does not delete the app, it just removes the shortcut from the Home screen.

Move a Shortcut

You can move a shortcut from one Home screen to another.

1. Touch and hold an app shortcut to release it.
2. Drag the app shortcut to **Move apps** and release it.
3. Swipe to a new Home screen.
4. Tap the shortcut to place it in the next available location, or drag it to a specific location and release it.

Folders

Place folders on a Home screen to organize items.

Create a Folder

You can create an app folder on a Home screen.

1. From a Home screen, touch and hold an app shortcut and drag it on top of another app shortcut until a highlighted box appears.
2. Release the app shortcut to create the folder.
   - **Enter folder name**: Enter a name for the folder.
   - **Palette**: Change the color.
   - **Add application**: Place more apps in the folder. Tap apps to select them, and then tap **Add**.
3. Tap anywhere outside of the folder to close it.
   - To add more apps, touch and hold an app shortcut and drag it to the folder.

Remove a Folder from a Home Screen

You can remove a folder that you added to a Home screen.

1. Touch and hold the folder until it detaches.
2. Drag the folder to **Remove** and release it.

DRAFT
FOR INTERNAL USE ONLY

Status Bar

The Status bar at the top of the Home screen provides device information (such as network status, battery charge, and time) on the right side and notification alerts on the left.

Status Icons	
	Battery full: Battery is fully charged.
	Battery low: Battery is low.
	Battery charging: Battery is charging.
	Vibrate mode: Vibrate mode is enabled.
	Mute mode: Mute mode is enabled.
4G LTE	**4G LTE™ active**: The device is connected to a 4G LTE wireless network.
	Signal strength: Cellular network signal strength.
	Network not available: No wireless network is available.
	Wi-Fi active: Wi-Fi is active.
	Wi-Fi available: A Wi-Fi network is available.

Notification Icons	
	New email: New email has arrived.
	New Gmail: New Gmail has arrived.
	New message: New text or multimedia message has arrived.
	File download in progress: Download of a file or app is in progress.
	File upload in progress: File is being uploaded or sent.
	GPS active: Location service (GPS) is active and acquiring a signal.
	App updates available: App updates are available from the Google Play store.
	App updates complete: App installation or updates are complete.

DRAFT
FOR INTERNAL USE ONLY

Navigation

Learn the basics for how to navigate through your device.

Touchscreen Navigation

Use the following motions and gestures on your touchscreen to navigate the device.

Tap

Lightly tap items to select or launch them.

- Tap the keyboard to enter characters or text.
- Tap an item to select it.
- Tap an app shortcut to launch the application.

Touch and Hold

Touch and hold items on the screen to activate them.

- Touch and hold a widget on a Home screen to move it.
- Touch and hold a field to display a pop-up menu of options.

Swipe

Lightly drag your finger vertically or horizontally across the screen.

- Swipe the screen to unlock the device.
- Swipe the screen to scroll through the Home screens or menu options.

Drag

Touch and hold an item, and then move it to a new location.

- Drag an app shortcut to add it to a Home screen.
- Drag a widget to place it in a new location on a Home screen.

Pinch and Spread

Pinch the screen using your thumb and forefinger or spread by moving your fingers apart.

- Pinch the screen to zoom out while viewing a picture or a web page.
- Spread your fingers on the screen to zoom in while viewing a picture or a web page.

DRAFT
FOR INTERNAL USE ONLY

Common Options

The device uses basic command options to perform common actions.

- **More**: Tap to view more menu options for a screen. This often allows you to select items to delete or share.
- **Delete**: Tap to select items to delete.
- **Share**: Tap to select items to share, and then choose a sharing method.
- **Edit**: Tap to customize the screen.
- **On/Off button**: Tap to turn the option on (ON) or off (OFF).
- **Checkbox**: Tap to enable or select. When enabled, a checkmark is displayed. You can often tap a checkbox at the top of the screen to select all.
- **Menu**: Tap to view available options for the field.

DRAFT
FOR INTERNAL USE ONLY

Notification Panel

Notification icons on the Status bar display calendar events, device status, and more. For details, open the Notification panel.

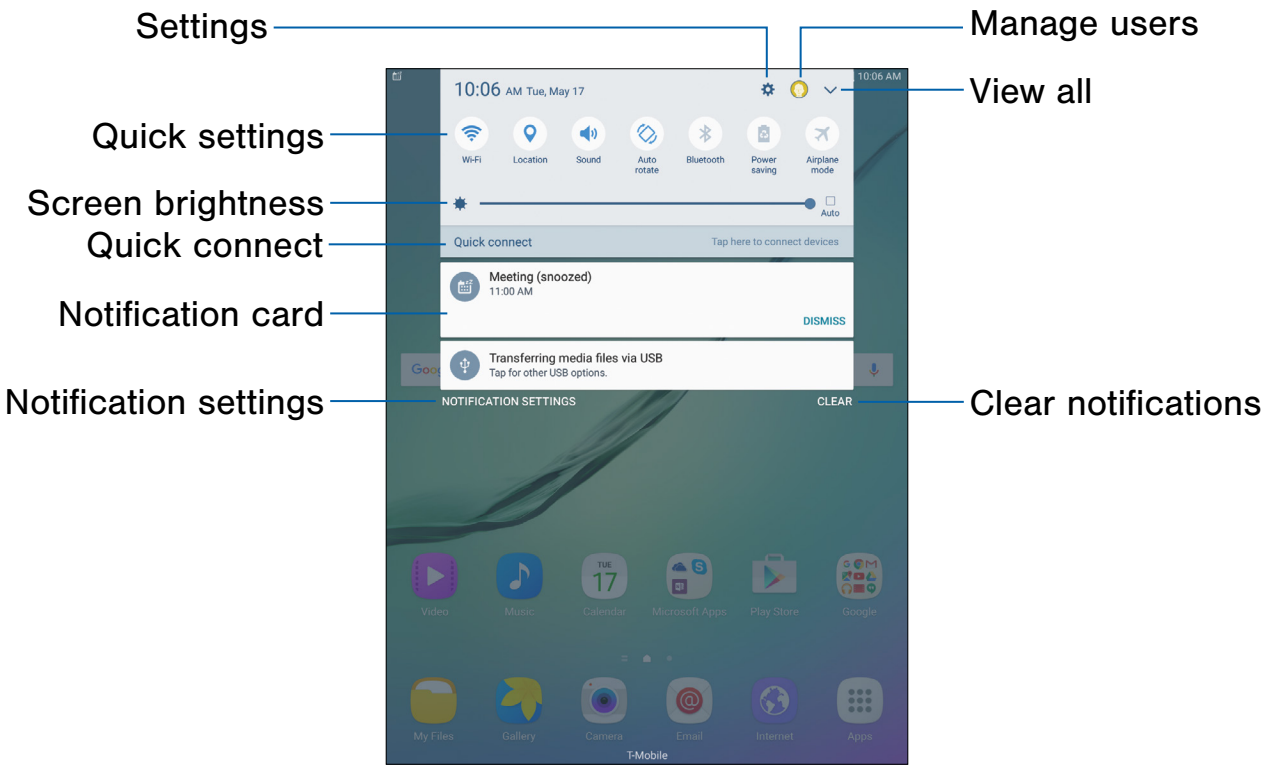

- **Manage users**: Display the Users screen.
- **View all**: See all available Quick settings.
- **Clear notifications**: Clear all notifications.
- **Notification settings**: Enable or disable notifications from each app. For more information, see Notifications.
- **Notification card**: View details about a notification.
- **Quick connect**: Search for nearby devices to connect with quickly and easily.
- **Screen brightness**: Adjust screen brightness.
- **Quick settings**: Quickly enable or disable a feature.
- **Settings**: Display the Settings screen.

DRAFT
FOR INTERNAL USE ONLY

View the Notification Panel

You can access the Notification panel from any Home screen.

1. Drag the Status bar down to display the Notification panel.
2. Swipe down the list to see notification details.
   - To open an item, tap it.
   - To clear a single notification, drag the notification left or right.
   - To clear all notifications, tap **Clear**.
3. Drag upward from the bottom of the screen or tap **Back** to close the Notification panel.

Quick Settings

In addition to notifications, the Notification panel also provides quick access to device functions such as Wi-Fi, allowing you to quickly turn them on or off.

To view additional Quick settings:

1. Drag the Status bar down to display the Notification panel.
2. Swipe left or right across the visible icons.

To customize the Quick settings that display:

1. Drag the Status bar down to display the Notification panel.
2. Tap **View all**, and then tap **Edit**.
   - **Quick settings**: Drag the icons to change their positions.
   - **Quick connect**: Tap **On/Off** to show or hide this feature on the Notification panel.
3. Tap **Done** to save.

Quick Connect

Search for nearby devices automatically to connect to them quickly and easily.

1. Drag the Status bar down to display the Notification panel.
2. Tap **Quick connect**. Your device automatically scans for compatible devices.
   - **Scan for nearby devices**: Scan for compatible devices.
   - **Refresh**: Update the list of discovered devices.
   - **More**:
     - **Set device visibility**: Configure device visibility.
     - **About Quick connect**: View Quick connect information.
     - **Help**: Read help topics for Quick connect.
3. Tap a device from the list and select an option:
   - **Share content**: Choose a file to share with the device.
   - **Share Wi-Fi profile**: Share available Wi-Fi profiles with the device.

To disconnect from a device:

1. Drag the Status bar down to display the Notification panel.
2. Tap **Quick connect**.
3. Tap **More** > **Disconnect** next to a paired device.

DRAFT
FOR INTERNAL USE ONLY

Multi Window

Multitask by using multiple applications at the same time.

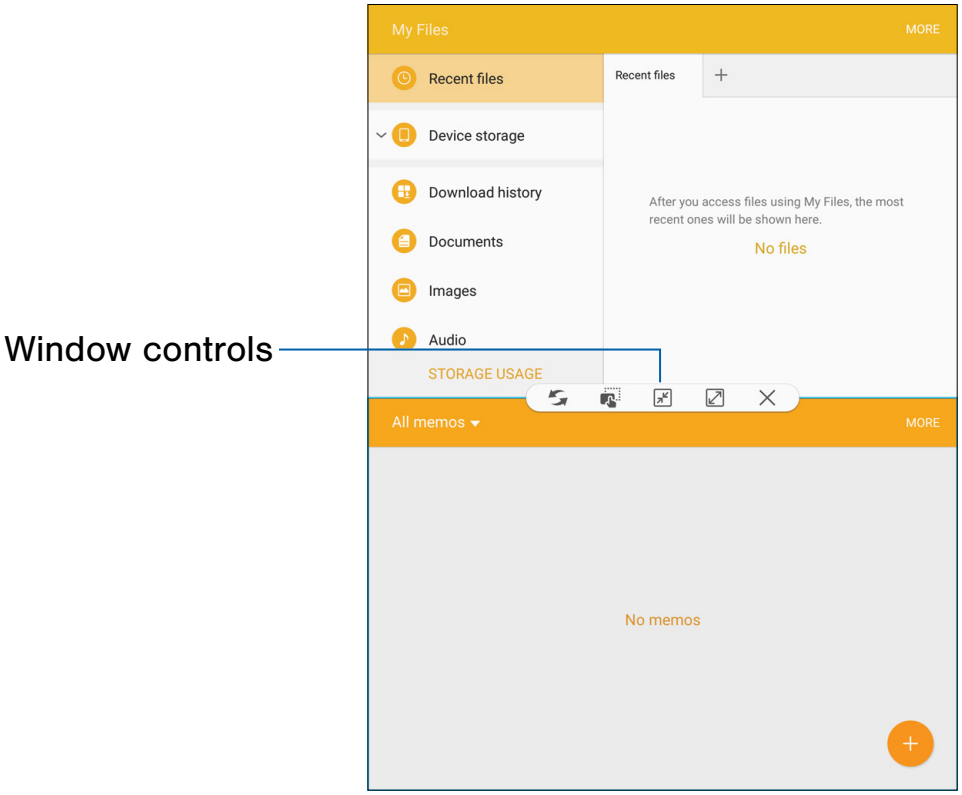

Activate Multi Window

Apps that support Multi window display together on a split screen. You can switch between the apps, adjust the size of their display on the screen, and copy information from one app to the other.

Note: Multi window is not available for all apps.

1. From any screen, touch and hold **Recent**.
2. Tap two apps that support Multi window to open them in split screen view.

   – or –

   If you are currently using an app that supports Multi window, tap another app to add it in split screen view.

You can also launch recently used apps directly into Multi window view:

1. Tap **Recent**.
   - Recently used apps that support Multi window have a **Multi window** icon in their title bar.
2. Tap **Multi window** in the title bar to launch an application in split screen view.
   - Other recently used apps that support Multi window display below the launched app.
3. Tap an app icon to add it to the split screen view.

Note: Only applications that support Multi window have the Multi window icon.

DRAFT
FOR INTERNAL USE ONLY

Window Controls

Select an app window, and then tap **Window controls** in the middle of the window border.

Controls	
	Switch windows: Switch locations between Multi window apps.
	Drag and drop content: Move items between the app windows. Drag an item to share from one window to another. Not all applications support this feature.
	Minimize window: Minimize the selected app window. This turns the app into a circular, movable icon that can be opened by tapping on it.
	Maximize window: Open the selected app window in full screen view.
	Close app: Close the selected app.

DRAFT
FOR INTERNAL USE ONLY

Enter Text

Text can be entered using a keyboard or by speaking.

Use the Samsung Keyboard

Enter text using a QWERTY keyboard.

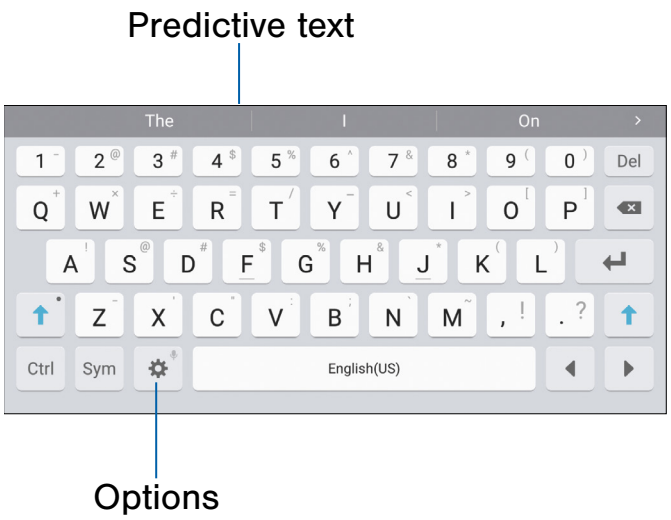

Special Keys	
Sym	**Symbol**: Tap to insert symbols.
Ctrl	**Control**: Touch and hold for quick access to cut (x), copy (c), paste (v), undo (z), redo (y), and select all (a).

Special Keys	
Touch and hold **Options** for the following:	
	Voice input: Enter text using Google Voice™ typing.
	Handwriting: Use your handwriting to enter text.
	Clipboard: Access the clipboard.
	Emoticon: Insert an emoticon at the cursor position.
	Keyboard types: Change the layout of the keyboard.
	Keyboard settings: Access keyboard settings.

Note: Available options depend on the app in use. Not all options are available for all apps.

Predictive Text

Predictive text suggests words that match your text entries, and can automatically complete common words. Predictive text can learn your personal writing style from your contacts, messages, email, and social networking sites—improving the accuracy of predicting text entries.

Configure the Samsung Keyboard

To customize the Samsung keyboard:

1. From a Home screen, tap **Apps** > **Settings**.
2. Tap **Language and input** > **Samsung keyboard** for options.

For more information, see Samsung Keyboard.

DRAFT
FOR INTERNAL USE ONLY

Use Google Voice Typing

Instead of typing, enter text by speaking.

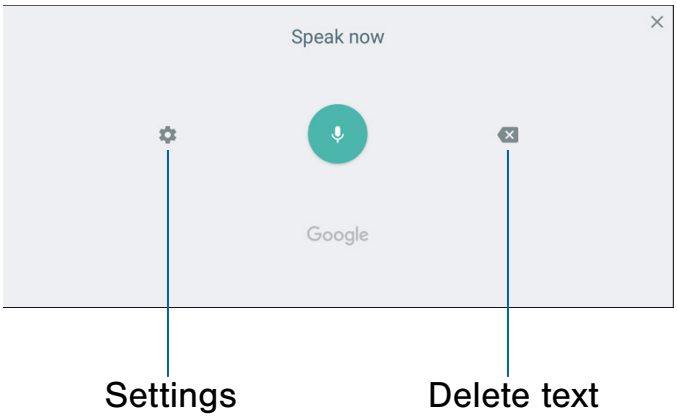

To enable Google voice typing:

1. Tap **Voice input** on the Samsung keyboard.
   - You may need to touch and hold **Options** (left of the Space bar) to find it.
2. Speak your text.

Note: Tap **Settings** > **Languages** to download additional languages for use with Google voice typing.

Configure Google Voice Typing

To customize Google voice typing:

1. From a Home screen, tap **Apps** > **Settings**.
2. Tap **Language and input** > **Google voice typing** for options.

For more information, see Google Voice Typing.

DRAFT
FOR INTERNAL USE ONLY

Applications

Learn how to change the way apps are displayed, organize apps into folders, and uninstall or disable apps.

DRAFT
FOR INTERNAL USE ONLY

Apps List

The Apps list displays all preloaded apps and apps that you downloaded. You can uninstall, disable, or hide apps from view.

Shortcuts to apps can be placed on any of the Home screens. For more information, see Add a Shortcut to a Home Screen.

Access Apps

You can access and launch all applications from the Apps list.

1. From a Home screen, tap **Apps**.
2. Tap an app's shortcut to launch it.
   - To return to the main Home screen, press the **Home** key.

Download and Install New Apps

Find new apps to download and install on your device.

- **Play Store**: Download new apps from the Google Play store. Visit play.google.com/store/apps to learn more.
- **Galaxy Apps**: View and download Samsung apps that are optimized for use with Galaxy devices. Visit samsung.com/levant/apps/mobile/galaxyapps to learn more.

Uninstall or Disable Apps

You can uninstall or disable apps you download and install.

- Preloaded apps cannot be uninstalled.
- Apps that are disabled are turned off and hidden from view.

To uninstall or disable an app:

1. From a Home screen, tap **Apps**.
2. Tap **Edit**. Apps that can be uninstalled or disabled display **Uninstall/Disable** on their shortcut.
3. Tap **Uninstall/Disable** and follow the prompts to either uninstall or disable the app.

To enable apps after disabling them:

1. From a Home screen, tap **Apps** > **Settings** > **Applications** > **Application manager**.
2. Tap **All apps** > **Disabled**, and then tap the app you want to enable.
3. Tap **Enable**. The app is displayed again in the Apps list.

Search for Apps

To locate an app in your Apps list:

1. From a Home screen, tap **Apps**.
2. Tap **Search**.
   - Enter a word or words in the **Search** field. As you type, apps that match display on the screen.
   - Tap an entry to launch that app.

DRAFT
FOR INTERNAL USE ONLY

Organize Your Apps

App shortcuts can be listed alphabetically or in your own custom order.

To change the order apps are listed:

1. From a Home screen, tap **Apps** > **Edit**.
2. Touch and hold an app shortcut or folder, and then drag it to a new location.
3. Tap **Done** when finished.

To alphabetize your apps:

1. From a Home screen, tap **Apps** > **A-Z**.
2. Tap **Save**.

Use Folders to Organize Apps

You can organize Apps in a folder on an Apps list screen.

1. From a Home screen, tap **Apps** > **Edit**.
2. Touch and hold an app shortcut, and then drag it on top of another app shortcut until a highlighted box is displayed.
3. Release the app shortcut to create the folder.
   - **Enter folder name**: Name the folder.
   - **Palette**: Change the folder color.
   - **Add application**: Place more apps in the folder. Tap apps to select them, and then tap **Add**.
4. Tap anywhere outside of the folder to close it.
   - To add more apps, touch and hold an app shortcut and drag it to the folder.
5. Tap **Done** when finished.

To launch apps in a folder:

► Tap a folder, and then tap an app shortcut to launch it.

To delete a folder:

1. From a Home screen, tap **Apps** > **Edit**.
2. Tap the folder to delete, and then tap **Delete folder**. Confirm when prompted.
3. Tap **Done** when finished.

Add a Folder to a Home Screen

To add a folder to a Home screen:

1. From a Home screen, tap **Apps**.
2. Touch and hold a folder, drag it to a Home screen, and then release it.

DRAFT
FOR INTERNAL USE ONLY

Google Apps

Enjoy these apps from Google.

Note: Certain apps require a Google Account. Visit google.com to learn more.

Chrome

Browse the Internet and bring your open tabs, bookmarks and address bar data from your computer to your mobile device.

Visit google.com/chrome/mobile to learn more about Chrome™.

Drive

Open, view, rename, and share your Google Docs™ and files.

Visit drive.google.com to learn more about Google Drive™.

Gmail

Send and receive email with Gmail, Google's web-based email service.

Visit gmail.com to learn more.

Google

Search not only the Internet, but also the apps and contents of your device.

Google Now

Works in the background to collect information you regularly look up and organize it into convenient cards that appear when you need them.

Visit google.com/search/about/learn-more/now to learn more.

Note: When Google Now™ is enabled, you can access it by tapping **Google**.

Hangouts

Meet friends and family online, share photos, host video calls, and send SMS and Hangouts messages.

Visit hangouts.google.com to learn more.

Maps

Find your current location and get directions and other location-based information.

Visit google.com/maps to learn more.

Note: You must enable location services to use Google Maps™. For more information, see Location.

Photos

Automatically backs up your photos and videos to your Google Account.

Visit photos.google.com to learn more about Google Photos™.

DRAFT
FOR INTERNAL USE ONLY

Play Movies & TV

Watch movies and TV shows purchased from Google Play. You can stream them instantly or download them for viewing when you are not connected to the Internet. You can also view videos saved on your device.

Visit play.google.com/store/movies to learn more.

Play Music

Play music and audio files on your device.

Visit play.google.com/music to learn more.

Play Store

Find new apps, movies and TV shows, music, books, magazines, and games in Google Play store.

Visit play.google.com/store to learn more.

Voice Search

Use voice commands to search the web with Google.

YouTube

View and upload YouTube™ videos from your device.

Visit youtube.com to learn more.

DRAFT
FOR INTERNAL USE ONLY

T-Mobile Apps

Enjoy these apps from T-Mobile.

Note: Certain apps require a data plan or paid subscription. Visit t-mobile.com to learn more or contact your service provider for additional information.

Mobile HotSpot

Use your device as a mobile hotspot, sharing data with other devices through a Wi-Fi connection.

For more information, see Mobile HotSpot and Tethering.

DRAFT
FOR INTERNAL USE ONLY

Additional Apps

There are additional apps, including several Samsung apps, preloaded on your device.

Amazon

Shop at amazon.com™ from your device.

Visit amazon.com to learn more.

Excel

View, create, and edit spreadsheets on your device. You can unlock the full Excel® experience with an Office 365 subscription.

Lookout

Configure and manage key security options, such as anti-virus and anti-malware technology, a lost and stolen device locater service, an application privacy adviser, and a backup service.

OneDrive

Store and share photos, videos, documents, and more in your free online OneDrive® account, which you can then access from your personal computer, tablet, or phone.

OneNote

Stay organized using text, pictures, or audio notes. Create Quick Notes or review and edit shared OneNote® notebooks using OneDrive.

PowerPoint

View, create, and edit presentations on your device. You can unlock the full PowerPoint® experience with an Office 365 subscription.

Samsung Milk Music

Stream music with Samsung Milk Music™, a radio service that offers a simple way to find the music that is right for you. With a library of over 13 million songs and 200+ stations, the interactive dial makes it easy to skim through stations to find the perfect soundtrack for the moment.

Samsung+

Get live help, discover new features, and unlock promotions for your Samsung device.

SideSync

Share screens, windows, and data between a PC and Samsung Android device.

Skype

Hold video and voice calls, and send instant messages to anyone around the world.

Smart Manager

Access your Battery, RAM, Storage, and Device security information.

For more information, see Smart Manager.

DRAFT
FOR INTERNAL USE ONLY

Word

View, create, and edit documents on your device. You can unlock the full Word experience with an Office 365 subscription.

DRAFT
FOR INTERNAL USE ONLY

Calculator

The Calculator provides basic and advanced arithmetic functions.

Basic Operation

You can use your calculator to perform basic operations.

1. From a Home screen, tap **Apps** > **Calculator**.
2. Enter the first number using the numeric keys.
3. Tap the appropriate arithmetic function key.
4. Enter the next number.
5. Tap **Equals** to view the result.
6. Tap C **Clear** to clear the results.

Additional Functions

You can perform additional functions on your calculator.

To clear the calculator history:

► Tap **Clear history**.

To copy all or part of the calculation to the clipboard:

► Touch and hold an entry in the display field, and then tap **Copy**.

Scientific Calculator

The Calculator app also provides advanced arithmetic functions, such as *sin*, *cos*, and *tan*.

DRAFT
FOR INTERNAL USE ONLY

Calendar

Manage your events and tasks.

Calendar View

To choose a calendar view:

1. From a Home screen, tap **Apps** > **Calendar**.
2. Tap one of the following:
   - **Year**: Display all twelve months of this year. Swipe across the screen to display another year.
   - **Month**: Display the current month. Swipe across the screen to display another month. Events and tasks are also displayed.
   - **Week**: Display the current week. Swipe across the screen to display another week.
   - **Day**: Display today's schedule by hour. Swipe across the screen to display another day.
   - **Tasks**: Display all tasks.
3. Tap **Today** to return to the current date.

Create an Event

You can use your Calendar to create events.

1. From a Home screen, tap **Apps** > **Calendar**.
2. Tap **Add** to add an event.
3. Enter details for the event, and then tap **Save**.

Share an Event

You can share events you create from your Calendar.

1. From a Home screen, tap **Apps** > **Calendar**.
2. Tap an event to view it.
3. Tap **Share**, choose a sharing method, and follow the prompts.

Delete an Event

You can delete events you create from your Calendar.

1. From a Home screen, tap **Apps** > **Calendar**.
2. Tap an event to view it.
3. Tap **Delete**. Confirm when prompted.

DRAFT
FOR INTERNAL USE ONLY

Create a Task

You can use your Calendar to create tasks. Tasks are items you add to the calendar to be accomplished on a certain day. A task appears as a checklist item and is removed once you mark the task as complete.

1. From a Home screen, tap **Apps** > **Calendar**.
2. Tap **Tasks** (by default, Month is shown).
3. Tap the **Enter new task** field to enter a new task.
4. You can choose to set the task for **Today**, **Tomorrow**, or tap **Expand** to set the following options:
   - **Set date**: Choose a date on the calendar for the task.
   - **My task**: Change the calendar on which the task is saved. You can change the task to an event by tapping **My calendars**.
   - **Reminder**: Set a reminder alert.
   - **Notes**: Save a note with your task.
   - **Priority**: Assign a priority to the task.
5. Tap **Save** to save the task.

Delete a Task

You can delete tasks you create from your Calendar.

1. From a Home screen, tap **Apps** > **Calendar**.
2. Tap a day on the calendar to view the tasks for the day, or tap **Tasks**.
3. Tap the **Checkbox** by the task to mark it as complete and remove it from the calendar.
   - To delete the task permanently, tap the task to open it, and then tap **Delete**. Confirm when prompted.

Calendar Settings

These settings allow you to modify settings associated with using the Calendar.

1. From a Home screen, tap **Apps** > **Calendar**.
2. Tap **More** > **Settings**.
3. Tap an option and follow the prompts.

DRAFT
FOR INTERNAL USE ONLY

Camera and Video

Take pictures and record videos with the Camera app.

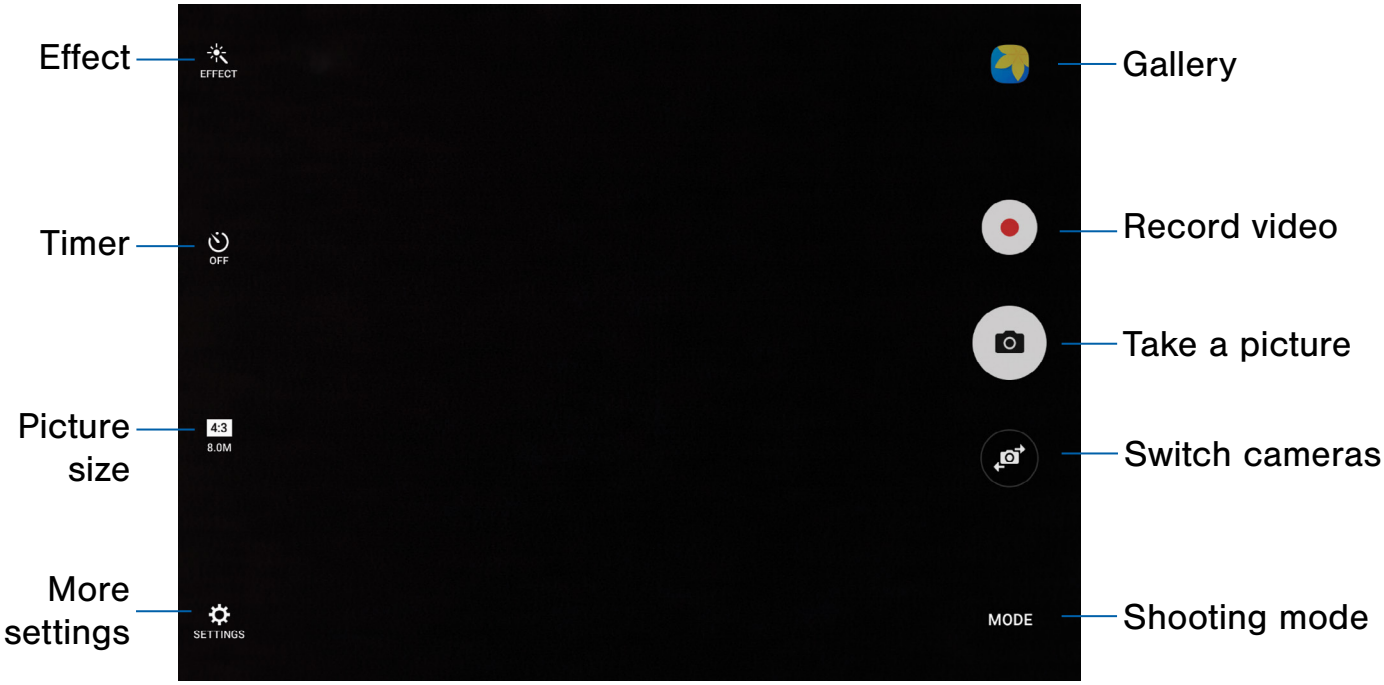

- **Gallery**: Open the Gallery to view photos and videos.
- **Record video**: Record a video.
- **Take a picture**: Take a picture.
- **Switch cameras**: Switch between the rear and front cameras.
- **Shooting mode**: Change the shooting mode.
- **More settings**: Configure other camera settings.
- **Picture size**: Change the picture size (resolution and screen ratio).
- **Timer**: Set the camera timer.
- **Effect**: Add an effect before taking a photo or video.

DRAFT
FOR INTERNAL USE ONLY

Take Pictures

Take pictures with your device's front or rear camera, or combine shots with Dual camera mode.

Note: Prior to using the camera, remove the plastic protective covering from the camera lens.

1. From a Home screen, tap **Apps** > **Camera**.
2. Using the display screen as a viewfinder, compose your shot by aiming the camera at the subject. While composing your picture, use the available options or these gestures:
   - Touch the screen with two fingers and pinch or spread them on the screen to zoom in or out.
   - Tap the screen to focus on the area you touched. When you tap the screen, a brightness scale is displayed. Slide the light bulb up or down to adjust the brightness.
3. Before taking the photo, you can tap the icons to access various camera options and settings.
4. Tap **Take a picture** to take the picture.

Note: You can also press the **Volume** key up or down to take a picture. This is the default action of the Volume key while the camera is active. You can also set the Volume key to act as the video record key or as a zoom key.

Shooting Mode

Several visual effects are available. Some modes are not available when taking self-portraits.

1. From a Home screen, tap **Apps** > **Camera**.
2. Tap **Mode** for the following options. Each section indicates which camera (front or rear) the modes are available for.

Both cameras

- **Virtual shot**: Create multi-directional views of objects.
- **Download**: Download additional shooting modes from the Galaxy Apps store.
- **Info**: Read information about each available camera mode.

Rear camera

- **Auto**: Allow the camera to evaluate the surroundings and determine the ideal mode for the picture.
- **Pro**: Manually adjust the ISO sensitivity, exposure value, white balance, and color tone while taking pictures.
- **Panorama**: Create a linear image by taking pictures in either a horizontal or vertical direction.
- **HDR (Rich tone)**: Enables the light sensitivity and color depth features of the device to produce a brighter and richer picture.
- **Shot & more**: Use various functions with your burst shots after you take them, such as best photo, best face, drama, eraser, and panning shot.
- **Dual camera**: Take pictures and record videos in a variety of styles using the front and rear cameras at the same time.

Front camera

- **Selfie**: Take selfie shots and apply various effects, such as an airbrushed effect.
- **Interval shot**: Select the best pictures from a series of continuous shots taken at set intervals.

DRAFT
FOR INTERNAL USE ONLY

Camera Settings

You can adjust your camera's settings using the icons on the main camera screen and the full camera settings menu.

1. From a Home screen, tap **Apps** > **Camera**.
2. Quick settings are listed across one side of the camera view finder. Available options vary depending on the camera or recording mode used. Default settings include:
   - **Effect**: Add special graphical effects.
   - **Timer**: Take time-delayed pictures or videos.
   - **Beauty**: Take a picture with lightened faces for gentler images. (Available only on the front camera.)
   - **Picture size**: Select a resolution. Use higher resolution for higher quality. Higher resolution pictures take up more memory.
3. Tap **Settings** to configure settings for the Camera. Available options vary depending on the camera or recording mode used.

Both cameras

- **Video size**: Select a resolution. Use higher resolution for higher quality. Higher resolution videos take up more memory.
- **View mode**: Choose between standard and full screen view mode.
- **Grid lines**: Display viewfinder grid lines to help composition when selecting subjects.
- **Location tags**: Attach a GPS location tag to the picture.
- **Review pictures**: Set to show pictures after taking them.
- **Storage location**: Choose to store your photos to your device, or optional memory card.
- **Volume keys function**: Use the Volume key as the camera key, the record key, or as a zoom key.
- **Shutter sound**: Enable or disable a shutter sound when pictures are taken.
- **Reset settings**: Reset the camera settings.
- **Help**: View information on using the camera.

Rear camera

- **Video stabilization**: Activate anti-shake. Anti-shake helps to keep the focus steady when the camera is moving.

Front camera

- **Gesture control**: Detect your palm and automatically take a picture two seconds later.
- **Save pictures as previewed**: Save the self-portrait or self-recording as viewed on the camera screen, not as flipped images.

Note: Higher resolution pictures and videos use more memory.

Dual Camera Mode

Take pictures and record videos using the front and rear cameras at the same time. A variety of picture-in-picture styles are available.

1. From a Home screen, tap **Apps** > **Camera**.
2. Tap **Mode** > **Dual camera**.
3. Touch and drag the inset picture to another position on the screen.
4. Tap the inset picture, and then touch and drag the corners to enlarge or reduce the size of the inset.
5. Tap **Effects**, and then tap a style for the inset picture.

DRAFT
FOR INTERNAL USE ONLY

Clock

The Clock app offers features for keeping track of time and setting alarms.

1. From a Home screen, tap **Apps** > **Clock**.
2. Tap a tab to use a feature:
   - **Alarm**: Set an alarm to ring at a specific time.
   - **World clock**: View the time of day or night in other parts of the world. World clock displays time in hundreds of different cities, within all 24 time zones around the world.
   - **Stopwatch**: Measure intervals of time.
   - **Timer**: Use a timer to count down to an event based on a preset time length (hours, minutes, and seconds).

Alarm

Set an alarm to ring at a specific time.

Create an Alarm

Create an alarm event. You can set one-time or recurring alarms, and choose options for how to be notified.

1. From a Home screen, tap **Apps** > **Clock**.
2. Tap the following items to configure an alarm:
   - **Date**: Choose the day for this alarm.
   - **Time**: Set a time for the alarm.
   - **Repeat**: Choose when to repeat the alarm.
   - **Options**: Tap to view and set the following options:
     - **Alarm type**: Choose whether the alarm uses sound, vibration, or sound and vibration to alert you.
     - **Volume**: Drag the slider to set the volume of the alarm.
     - **Alarm tone**: Choose a sound to play for the alarm.
     - **Snooze**: Allow snoozing. Set interval and repeat values for the alarm while snoozing.
     - **Increasing volume**: Start playing the alarm tone at a low volume at an interval before the alarm time, and slowly increase in volume. This option is available only when you have chosen an alarm type that includes sound.
     - **Alarm name**: Enter a name for the alarm.
3. Tap **Save** to save the alarm.

Delete an Alarm

You can delete an alarm that you have created.

1. From a Home screen, tap **Apps** > **Clock**.
2. Find the alarm in the alarm list (under the Alarm tab), and then tap **Delete** in the upper right corner of the alarm entry.

DRAFT
FOR INTERNAL USE ONLY

World Clock

The World clock lets you keep track of the current time in multiple cities around the globe.

To list a city on the main World clock screen:

1. From a Home screen, tap **Apps** > **Clock**.
2. Tap **World clock**.
   - A map of the world displays with the locations you have added.
3. Tap a city or tap **Search**.
4. Tap **Add city**.
5. Repeat to add more cities.

To remove a city from the World clock screen:

1. From a Home screen, tap **Apps** > **Clock**.
2. Tap **World clock**.
3. Find the city to remove, and then tap **Delete** in the upper right corner of the city entry.

Stopwatch

The Stopwatch lets you time events down to a hundredth of a second.

1. From a Home screen, tap **Apps** > **Clock**.
2. Tap **Stopwatch** and use the following options:
   - **Start**: Begin timing.
   - **Stop**: Stop timing.
   - **Lap**: Keep track of lap times.
   - **Resume**: Continue timing after stopping the clock.
   - **Reset**: Reset the Stopwatch to zero.

Timer

The Timer provides a countdown timer for up to 99 hours, 59 minutes, and 59 seconds.

1. From a Home screen, tap **Apps** > **Clock**.
2. Tap **Timer**.
3. Use the keypad and tap **Hours**, **Minutes**, and **Seconds** to set the length of the Timer. The following options are available:
   - **Start**: Begin the Timer.
   - **Pause**: Pause the Timer.
   - **Resume**: Resume the Timer.
   - **Cancel**: Stop the Timer.
   - **Reset**: Reset the Timer.

DRAFT
FOR INTERNAL USE ONLY

Contacts

Store and manage your contacts with the Contacts app, which can be synchronized with a variety of your existing personal accounts, including Google, Email, and your Samsung account.

For more information on connecting with and managing your accounts through your device, see Accounts.

Manage Contacts

Access your list of contacts by using the Contacts app. To access your Contacts list:

▶ From a Home screen, tap **Apps** > **Contacts**.

Find a Contact

You can search for a contact or swipe the list to find one by name.

1. From a Home screen, tap **Apps** > **Contacts**.
2. Tap the **Search** field, and then enter characters to find contacts that match.

   – or –

   Tap a letter on the side of the list to jump directly to that letter in the alphabetical list. You can also slide your finger across the alphabetical list to select a letter with better precision.

Add a Contact

Use the following procedure to add a new contact.

1. From a Home screen, tap **Apps** > **Contacts**.
2. Tap **Create contact**, and then tap contact fields to enter information.
   - Choose a storage account for the contact. You can store the contact on the device, your SIM card, or sync it with an account.
   - Tap **Contact photo** to assign a picture to the new contact.
   - Enter a name, phone number, email address, and assign the contact to a group.
     - Tap **Add** to enter additional entries.
     - Tap **Remove** to remove an entry.
     - Tap **More** for additional fields.
     - Tap the label to the right of an entry to choose a label for the field (for example, Home or Work).
3. Tap **Save**.

Edit a Contact

When editing a contact, you can tap a field and change or delete the information, or you can add more fields to the contact's list of information.

1. From a Home screen, tap **Apps** > **Contacts**.
2. Tap the contact to display it, and then tap **Edit**.
3. Tap any of the fields to add, change, or delete information.
4. Tap **Save**.

DRAFT
FOR INTERNAL USE ONLY

Share a Contact

When you share a contact, the contact's information is sent as a vCard file (.vcf) or text file. You can share a vCard using Bluetooth or Wi-Fi Direct, attach it to a message, or save it to a storage location.

1. From a Home screen, tap **Apps** > **Contacts**.
2. Tap a contact to display it, and then tap **More** > **Share contact**.
3. Choose whether to send the contact as a vCard file (.vcf) or text file.
4. Choose a sharing method and follow the prompts.

Link Contacts

When you have contacts from various accounts, you may have multiple similar entries for a single contact. Contacts lets you link multiple entries into a single contact.

1. From a Home screen, tap **Apps** > **Contacts**.
2. Tap the contact to display it.
3. Tap **More** > **Link contacts**.
4. Tap contacts to choose them.
5. Tap **Link**.

Unlink Contacts

You can unlink a contact that you previously linked.

1. From a Home screen, tap **Apps** > **Contacts**.
2. Tap the contact to display it.
3. Tap **More** > **Manage linked contacts**.
4. Tap **Separate** beside contacts to unlink them from the main contact.

Delete Contacts

You can delete a single contact or choose multiple contacts to delete.

1. From a Home screen, tap **Apps** > **Contacts**.
2. Touch and hold a contact to select it. You can also tap other contacts or tap the **All** checkbox at the top of the screen to select all contacts.
3. Tap **Delete**, and then confirm when prompted.

Favorites

When you mark contacts as favorites, they are easily accessible from other apps. Favorites display together under the Favorites tab in Contacts.

Mark Contacts as Favorites

You can mark contacts as Favorites.

1. From a Home screen, tap **Apps** > **Contacts**.
2. Tap a contact to display it, and then tap **Add to Favorites** (the star brightens).

Remove Contacts from Favorites

You can remove contacts from Favorites.

1. From a Home screen, tap **Apps** > **Contacts**.
2. Tap a contact to display it, and then tap **Remove from Favorites** (the star dims).

DRAFT
FOR INTERNAL USE ONLY

Groups

You can use groups to organize your contacts. Your device comes with preloaded groups, and you can create your own. You might create a group for your family, for coworkers, or a team. Groups make it easy to find contacts, and you can send messages to the members of a group.

Create a Group

You can create your own contact groups.

1. From a Home screen, tap **Apps** > **Contacts**.
2. Tap **Groups**, and then tap **Create**.
3. Tap fields to enter information about the group:
   - **Group name**: Enter a name for the new group.
   - **Add member**: Select contacts to add to the new group, and then tap **Done**.
4. Tap **Save**.

Rename a Group

You can rename a contact group.

1. From a Home screen, tap **Apps** > **Contacts**.
2. Tap **Groups**, and then tap a group.
3. Tap **Edit** and enter a new name.
4. Tap **Save**.

Add Contacts to a Group

You can add contacts to a group.

1. From a Home screen, tap **Apps** > **Contacts**.
2. Tap **Groups**, and then tap a group.
3. Tap **Edit** > **Add member**, and then tap the contacts you want to add. When finished, tap **Done**.
4. Tap **Save**.

Send an Email to a Group

You can send an email to members of a group.

1. From a Home screen, tap **Apps** > **Contacts**.
2. Tap **Groups**, and then tap a group.
3. Tap **More** > **Send email**.
4. Tap contacts to select them, or tap the **All** checkbox at the top of the screen to select all, and then tap **Done**.
   - Only group members that have an email address in their records are displayed.
5. Choose an email account and follow the prompts.
6. Type your message and tap **Send**.

Delete a Group

Preset groups cannot be deleted.

1. From a Home screen, tap **Apps** > **Contacts**.
2. Tap **Groups**, and then tap the group to delete.
3. Tap **More** > **Delete**.
4. Tap **Group only** to only delete the group or tap **Group and members** to delete the group and the contacts in the groups.

Contacts Settings

These settings allow you to modify settings associated with using the Contacts app.

1. From a Home screen, tap **Apps** > **Contacts**.
2. Tap **More** > **Settings**.
3. Tap an option and follow the prompts.

DRAFT
FOR INTERNAL USE ONLY

Email

Use the Email app to view and manage all your email accounts in one app.

To access Email:

► From a Home screen, tap **Apps** > **Email**.

Configure Email Accounts

You can configure Email for most accounts in just a few steps.

1. From a Home screen, tap **Apps** > **Email**.
2. Follow the prompts to set up your email account.

To add an Email account:

1. From a Home screen, tap **Apps** > **Email**.
2. Tap **More** > **Settings** > **Add account**.
3. Enter your email address and password.

The device communicates with the appropriate server to set up your account and synchronize your email. When complete, your email is displayed in the Inbox for the account.

Note: To configure email account settings at any time, tap **More** > **Settings**. Tap the email account to display its settings.

View Multiple Email Accounts

You can view email you receive for multiple accounts on the Combined inbox screen or you can view email accounts individually.

1. From a Home screen, tap **Apps** > **Email**.
2. Tap **Menu** at the top left of the screen to view the current account mailbox.
3. Tap the account name to view:
   - **Combined inbox**: View all email in a combined inbox.
   - [**Account Name**]: View email for only one email account.

Manage Your Inbox

There are several tools available from the Inbox screen.

► From a Home screen, tap **Apps** > **Email**.

- Tap a message to read and reply or forward it.
- Tap **Search** to search for key words in your email inbox.
- Tap **More** for additional message options like sorting, deleting, sharing and more.

DRAFT
FOR INTERNAL USE ONLY

Create and Send an Email

This section describes how to create and send an email using the Email app.

1. From a Home screen, tap **Apps** > **Email** > **Compose**.
2. Tap the **To** field to manually add an email address or tap **Add recipient** to select a recipient from Contacts or Groups.
   - If manually entering recipients, enter additional recipients by separating each entry with a semicolon (;). More recipients can be added at any time before the message is sent.
   - If adding a recipient from your Contacts, tap the contact to place a checkmark, and then tap **Done**. The contact is displayed in the recipients field.
   - Tap **More** to add Cc and Bcc fields.
3. Tap the **Subject** and **Message** fields to enter text.
   - Tap **Attach** to add Files, Images, Audio, and more to your email.
   - Tap **More** for additional email options.
4. Review your message and tap **Send**.

Remove Email Accounts

To remove an email account:

1. From a Home screen, tap **Apps** > **Email**.
2. Tap **More** > **Settings**.
3. Tap the account you want to remove.
4. Tap **Remove**. Confirm when prompted.

Email Settings

These settings allow you to modify settings associated with using the Email app.

1. From a Home screen, tap **Apps** > **Email**.
2. Tap **More** > **Settings**.
3. Under **General**, tap an option, and then follow the prompts.
4. Tap an account to configure specific settings for only that account.

DRAFT
FOR INTERNAL USE ONLY

Galaxy Apps

Samsung Galaxy Apps provides a quick and easy way to find and download free premium apps that are compatible with your Galaxy device.

To access the Samsung Galaxy Apps website:

► From a Home screen, tap **Apps** > **Galaxy Apps**.

Galaxy Essentials

Galaxy Essentials is a collection of specially chosen apps available through Samsung Apps.

From Galaxy Essentials, you can access and download a collection of premium content, free of charge.

To access Galaxy Essentials:

1. Swipe across the Home screens and locate and tap the **Galaxy Essentials** widget.
2. Follow the prompts to download Galaxy Essentials apps.

Note: A Samsung account is required to purchase and download apps.

DRAFT
FOR INTERNAL USE ONLY

Gallery

View, edit, and manage pictures and videos.

Note: Some functions described in this section are only available if there are images or videos in the Gallery.

View Images and Videos

Launching Gallery displays available folders. When another app, such as Email, saves an image, a Download folder is automatically created to contain the image. Likewise, capturing a screenshot automatically creates a Screenshots folder.

1. From a Home screen, tap **Apps** > **Gallery**.
2. Tap **Menu** in the upper left corner, and then tap an option to choose the way items are displayed.
   - In Albums view, you can create albums to organize your images. On the drop-down menu, tap **Albums**, and then tap **More** > **Create album**.
3. Depending on the view mode selected, either tap an image or video to view it, or first tap an album or folder and then tap an image or video.
   - When viewing an image or video, you can swipe left or right to view the next or previous image or video.

Zoom In or Out

Use one of the following methods to zoom in or out on an image:

- Double-tap anywhere on the screen to zoom in or zoom out.
- Spread two fingers apart on any place to zoom in. Pinch the screen to zoom out.

Play Videos

You can play videos stored on your device.

1. From a Home screen, tap **Apps** > **Gallery**.
2. Tap a folder or category to open it.
3. Tap a video to view it.
4. Tap **Play** to play the video.

Trim Segments of a Video

You can trim segments of a video.

1. Select a video, and then tap the screen once to see the video options.
2. Tap **Edit**, and then tap **Trim**.
3. Use the sliders at the bottom of the screen to trim the video. Move the left bracket to the desired starting point, and then move the right bracket to the desired ending point.
4. Tap **Export** to save the video. Modify the File name or Resolution, and then tap **Export** to confirm the changes.

DRAFT
FOR INTERNAL USE ONLY

Edit Images

You can edit images stored on your device.

► While viewing an image, tap the screen once to see the following options:

- **Auto adjust**: Apply adjustments determined by built-in correction software.
- **Share**: Send the image to your contacts by email, messaging, social media, cloud accounts, or other methods.
- **Edit**: View and use the editing tools.
- **Delete**: Delete the image from your device.
- **Favorite**: Mark the image as a favorite, and then access it from the Favorites view.
- **More**:
  - **Rotate left**: Rotate the picture counter-clockwise.
  - **Rotate right**: Rotate the picture clockwise.
  - **Details**: View and edit information about the image, including the date created, location, and properties.
  - **Slideshow**: Start a slideshow with the images and videos in the current folder.
  - **Set as contact picture**: Set the image as the photo for a contact.
  - **Set as wallpaper**: Set the image as a wallpaper for the Home and Lock screens.

Share Images and Videos

You can share images and videos from your Gallery.

1. From a Home screen, tap **Apps** > **Gallery**.
2. Tap a folder to open it.
3. In a folder, tap **More** > **Share**, select images and videos, and then tap **Share** to send them to others or share them with social network services.

   – or –

   While viewing a single image or video, tap **Share** to send it to others or share it with social network services.

Delete Images and Videos

You can delete images and videos stored on your device.

1. From a Home screen, tap **Apps** > **Gallery**.
2. Tap a folder to open it.
3. Tap **More** > **Edit**.
4. Tap images and videos to select them, or tap the **All** checkbox at the top of the screen to select all images and videos.
5. Tap **Delete**, and confirm when prompted.

   – or –

   When viewing a single image or video, tap **Delete**.

DRAFT
FOR INTERNAL USE ONLY

Internet

Access the Internet with a fully-featured web browser.

Access the Internet

► From a Home screen, tap **Apps** > **Internet**.

Command Keys

The following commands are available:

- **Back** or **Back**: Return to the previous page.
- **Forward**: Go forward to a recent page.
- **Home**: Display your Internet Home screen.
- **Bookmarks**: Manage bookmarked pages, saved pages, and history.
- **More**: Share, save, or bookmark a web page, open a new secret tab, display Internet app settings, and more.
- **Refresh**: Refresh or reload the current web page.

View a Web Site

To view a web site:

► Tap the address field, enter the web address, and then tap **Go** on the keyboard.

To zoom in or out:

► Tap the screen twice or pinch the screen to zoom out. Stretch the screen to zoom in.

Browser Tabs

Use tabs to view multiple web pages at the same time.

To open a new tab:

► Tap **New tab**.

- If all tabs are closed, tap **New tab**.
- Tap a different tab to view it.

To close a tab:

► Tap **Close tab**.

Bookmarks

The Bookmarks page stores Bookmarks, Saved pages, and History.

Save and Open Bookmarks

Bookmarking a web page saves the web address so that you can access it quickly.

To bookmark the current web page:

1. Tap **Bookmarks** > **Add**.
2. Type a title for the bookmark and tap **Save**.

To open a bookmarked web page:

► Tap **Bookmarks**, and then tap an entry.

DRAFT
FOR INTERNAL USE ONLY

Saved Pages

Saving a web page stores the web page content on your device so that you can access it offline.

To save the current web page:

► Tap **More** > **Save web page**.

To view saved web pages:

1. Tap **Bookmarks** > **Saved pages**.
2. Tap a saved page to open it in the browser.

View History

To view a list of recently visited web pages:

► Tap **Bookmarks** > **History**.

Share Pages

To share a web page address with others:

► Tap **More** > **Share**, and follow the prompts.

Secret Mode

Pages viewed in Secret mode are not listed in your browser history or search history, and leave no traces (such as cookies) on your device. Secret tabs are a darker shade than the normal tab windows.

Note: Any downloaded files remain on your device after you close the secret tab.

To turn on Secret mode:

1. From a Home screen, tap **Apps** > **Internet**.
2. Tap **More** > **Turn on Secret mode**.
3. Tap **Create password** to protect your Secret mode data with a password.

   – or –

   Tap **Do not use password**.

To turn off Secret mode:

1. From a Home screen, tap **Apps** > **Internet**.
2. Tap **More** > **Turn off Secret mode**.

DRAFT
FOR INTERNAL USE ONLY

Memo

Use Memo to write and save notes on your device.

Compose a Memo

You can create memos using the Memo app.

1. From a Home screen, tap **Apps** > **Memo**.
2. Tap **Create memo** and type a memo. Available options include:
   - **Category**: Add or change the category.
   - **Tasks**: Add tasks.
   - **Image**: Insert an image into the memo.
   - **Drawing**: Create a drawing and add it to the memo.
   - **Voice**: Use your voice to insert text into the memo.
3. Tap **Save** when finished.

Edit Memos

You can make edits to memos you create.

1. From a Home screen, tap **Apps** > **Memo**.
2. Tap a memo to view it.
3. Tap the content and make edits.
4. When you are finished, tap **Save**.

Browse Memos

You can browse memos you create.

► From a Home screen, tap **Apps** > **Memo**.

- Browse memo entries by swiping up or down.
- To search for a memo, tap **Search**.

Memo Options

You can edit, share, or manage memos.

1. From a Home screen, tap **Apps** > **Memo**.
2. While browsing memos, tap **More** for the following options:
   - **Edit**: Select notes to delete or move.
   - **Manage categories**: Create and manage categories to organize your memos.

DRAFT
FOR INTERNAL USE ONLY

Messages

Learn how to send and receive different messages using the Samsung Messages app on your device.

Types of Messages

The Samsung Messages app provides the following message types:

- Text Messages (SMS)
- Multimedia Messages (MMS)

The Short Message Service (SMS) lets you send and receive text messages to and from other mobile devices or email addresses. To use this feature, you may need to subscribe to your service provider's message service.

The Multimedia Messaging Service (MMS) lets you send and receive multimedia messages (such as picture, video, and audio messages) to and from other mobile devices or email addresses. To use this feature, you may need to subscribe to your service provider's multimedia message service.

Messaging icons are displayed at the top of the screen and indicate when messages are received and their type.

Create and Send Messages

This section describes how to create and send a message using the Messages app.

1. From a Home screen, tap **Apps** > **Messages**.
2. Tap **Compose**.
3. Tap the **Enter recipients** field to manually enter a recipient or tap **Add recipient** to select a recipient from your Contacts. You can also select the recipient based on Groups or Favorites.
   - If manually entering recipients, enter additional If adding a recipient from your Contacts, tap the contact to place a checkmark, and then tap **Done**. The contact is placed in the recipients field.
   - Enter additional recipients by separating each entry with a semicolon (;) and then using the previous procedure. More recipients can be added at any time before the message is sent.
4. Tap the **Enter message** field to enter a message.
   - **Attach**: Add images, audio, and more to your message.
   - **Add emoticon**: Choose an available emoticon from the list and add it into your message at the cursor location.
5. Review the message and tap SEND **Send**.

Note: If you exit a message before you send it, the message is automatically saved as a draft.

DRAFT
FOR INTERNAL USE ONLY

View New Messages

When you receive a new message, **New message** appears on the Status bar.

To view the message:

► Open the Notification panel and tap the message. For more information, see Notification Panel.

– or –

From a Home screen, tap **Apps** > **Messages**, and then tap the new message to view it.

- To play a multimedia message attachment (audio or video), tap **Play**.
- To scroll through the list of messages, swipe up or down the page.

Delete Messages

To delete messages, follow these steps:

1. From a Home screen, tap **Apps** > **Messages**.
2. Tap **More** > **Delete**.
3. Tap each message you want to delete or tap the **All** checkbox at the top of the screen to select all messages.
4. Tap **Delete** and confirm if prompted.

Message Search

You can search through your messages by using the Message Search feature.

1. From a Home screen, tap **Apps** > **Messages**.
2. Tap **Search**.
3. Enter a word or phrase to search for, and then tap **Search** on the keyboard.

Messages Settings

Configure the settings for text messages, multimedia messages, push messages, and more.

► From a Home screen, tap **Apps** > **Messages** > **More** > **Settings**.

DRAFT
FOR INTERNAL USE ONLY

Music Player

Listen to your favorite songs with the Music player. Navigate through your music library, play songs, and create customized playlists.

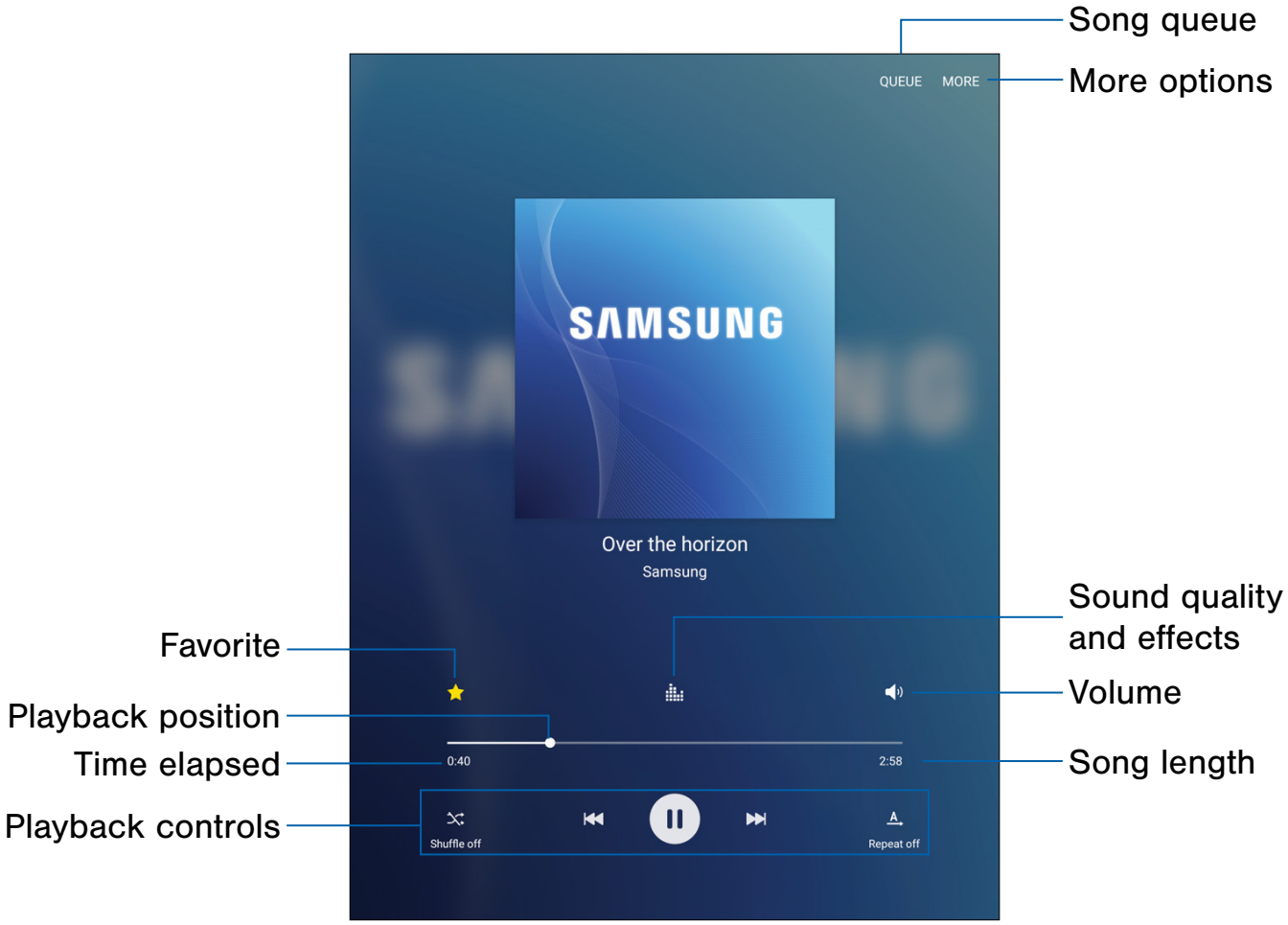

- **Song queue**: View the current song list being played.
- **More options**: View more options.
- **Sound quality and effects**: Customize options to adjust sound effects.
- **Volume**: Adjust the volume.
- **Song length**: View the total length of the current song.
- **Playback controls**: Change shuffle or repeat modes, fast-forward or rewind, or play or pause the current song.
- **Time elapsed**: View the time elapsed for the current song.
- **Playback position**: Skip to another part of the current song.
- **Favorite**: Tag this song as a favorite.

DRAFT
FOR INTERNAL USE ONLY

Listen to Music

1. From a Home screen, tap **Apps** > **Music**.
2. Tap a library category at the top of the screen to view your music files.
3. Swipe through the list of songs and tap an entry to begin playback.
4. While playing music, use these controls:
   - Tap **Pause** to pause playback. To start playback again, tap **Play**.
   - Tap **Rewind** to move to the previous song. Tap **Fast-forward** to move to the next song.
   - Tap the repeat button to control playback. Choose **Repeat off** to play all songs once. Choose **Repeat all** to repeat all songs. Choose **Repeat 1** to repeat the current song.
   - Tap the shuffle button to control the order songs are played. Choose **Shuffle off** to play songs in the order they appear in the list. Choose **Shuffle on** to play songs in random order.
   - Tap **Favorite** to mark a song as a favorite. Whenever a song is a favorite, the star is gold. Favorite songs are included in the Favorites playlist.
   - Tap **Volume** to set the volume. You can also set volume by pressing the **Volume** key on the side of the tablet.

Note: When you close the Music screen, playback continues in the background, allowing you to listen to music while using other features of your tablet. When music is playing in the background, you can access playback controls from the Notification panel.

DRAFT
FOR INTERNAL USE ONLY

My Files

Access files stored on your device, including images, videos, music, and sound clips.

To view files in My Files:

1. From a Home screen, tap **Apps** > **My Files**.
2. Tap a category to view the relevant files or folders.
3. Tap a file or folder to open it.

File Groups

Files stored in the device are organized into the following groups:

- **Recent files**: View recently saved files.
- **Device storage**: View folders and files located on the device.
- **SD card**: View folders and files located on the optional SD card (not included).
  - This option appears if an optional SD card is installed.
- **Download history**: View all apps and files that have been downloaded to the device.
- **Documents**: View document files.
- **Images**: View image files.
- **Audio**: View audio files.
- **Videos**: View video files.
- **Google drive**: Use a Google Account for cloud storage.

Note: Cloud drives vary depending on the services you sign in to.

My Files Options

Use My File options to search, edit, clear file history, and more.

► From a Home screen, tap **Apps** > **My Files**. The following options are available:

- **Search**: Search for a file or folder.
- **View as**: Choose how you want to view file information.
- **More**: Tap for the following options:
  - **Edit**: Edit files shown in Recent files.
  - **Share**: Share files.
  - **Create folder**: Create a new folder.
  - **Add shortcut**: Add a shortcut to a folder.
  - **Delete shortcut**: Delete a shortcut you created.
  - **Sort by**: Change the sort order of the files.
  - **Show/Conceal hidden files**: Show or conceal hidden files.
  - **Access cloud**: Access your cloud server data in Gallery and My Files on your device.
- **Storage usage**: Tap to view memory information for your device.

Note: Options vary by category.

DRAFT
FOR INTERNAL USE ONLY

Video Player

Play and manage videos stored on your device.

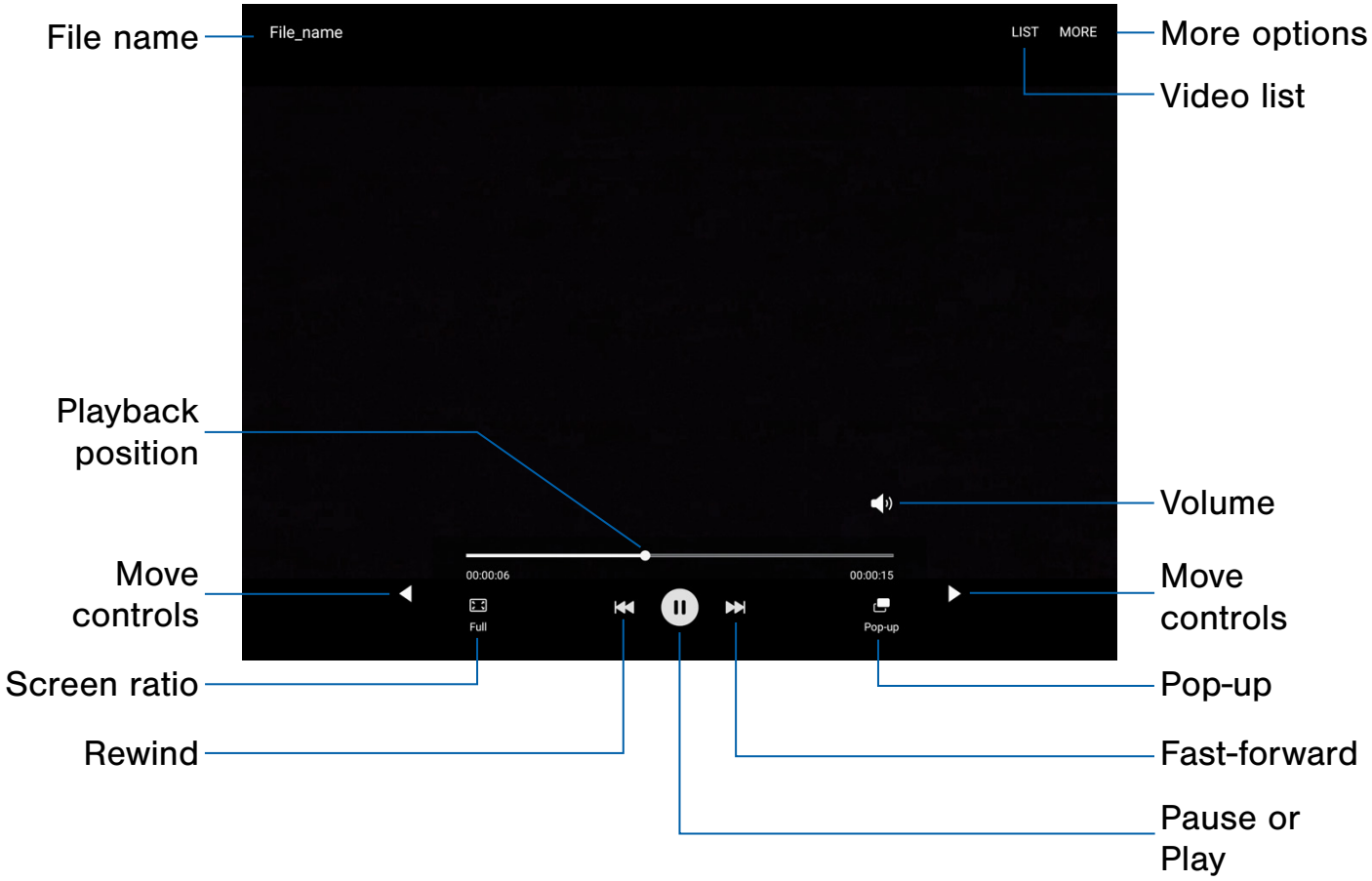

- **More options**: View more options.
- **Video list**: View the current video playlist.
- **Volume**: Adjust the volume.
- **Move controls**: Tap to move the Video player controls to the right or to the left (landscape orientation only).
- **Pop-up**: Open the video in a pop-up window.
- **Fast-forward**: Skip to the next video or fast-forward through the current video.
- **Pause** or **Play**: Pause or play the current video.
- **Rewind**: Restart the video, skip to a previous video, or rewind the video.
- **Screen ratio**: Change the screen ratio.
- **Playback position**: Skip to another part of the video.
- **File name**: View the name of the video file.

DRAFT
FOR INTERNAL USE ONLY

Access the Video Player

1. From a Home screen, tap **Apps** > **Video**.
2. Swipe through the videos stored on your device. After a few seconds, each video thumbnail begins playing a preview of the clip.
3. Tap a video to view it.

Manage Videos

Once you have recorded and saved at least one video, the following options are available:

1. From a Home screen, tap **Apps** > **Video**.
2. Tap **Edit**, and then select one or more videos to edit or delete.
3. Tap **More** to share videos, search for videos, or sort for videos.

Use Pop-Up Play

Multitask with Pop-up player by transforming your video player into a pop-up window. The video continues to play, and the pop-up window can be resized or moved anywhere on the screen.

1. From a Home screen, tap **Apps** > **Video**.
2. Tap a video to view it.
3. Tap **Pop-up** to continue playing the video in a floating window.
   - Drag the window to any location on the screen.
   - Use two fingers to pinch or spread to resize the floating window.

Change the Video Screen Size

You can change the size of the video is several ways during video playback.

1. From a Home screen, tap **Apps** > **Video**.
2. Tap a video to view it.
3. Tap the screen ratio icon to cycle through the screen size options:
   - **Full**: The entire screen is used, which may cause some minor distortion.
   - **Fit to screen**: The video is played in its original size.
   - **Keep ratio**: The video is enlarged to fit the screen without becoming distorted.

DRAFT
FOR INTERNAL USE ONLY

Settings

Configure your device's connections and settings, add accounts, and customize Home screens, apps, and features.

DRAFT
FOR INTERNAL USE ONLY

How to Use Settings

Access Settings

There are a couple of ways to access your device settings.

► From a Home screen, tap **Apps** > **Settings**.

– or –

Drag down from the Status bar to display the Notification panel, and then tap **Settings**.

Search for Settings

If you are not sure exactly where to find a certain setting, you can use the Search feature.

1. From a Home screen, tap **Apps** > **Settings**.
2. Tap **Search**.
   - Enter a word or words in the Search field. As you type, settings that match are displayed on the screen.
   - Tap an entry to go to that setting.

DRAFT
FOR INTERNAL USE ONLY

Wi-Fi

Wi-Fi is a term used for certain types of Wireless Local Area Networks (WLAN). Wi-Fi communication requires access to a wireless Access Point (AP).

Turn Wi-Fi On or Off

Turning Wi-Fi on makes your device able to discover and connect to compatible in-range wireless APs.

1. From a Home screen, tap **Apps** > **Settings**.
2. Tap **Wi-Fi**, and then tap **On/Off** to turn Wi-Fi on or off.

Wi-Fi Status Indicators

Status bar icons indicate your current Wi-Fi connection status:

- When Wi-Fi is connected, active, and communicating with a wireless Access Point, **Wi-Fi active** is displayed in the Status bar.
- If a Wi-Fi access point is available, but your device is not connected to it, **Wi-Fi available** is displayed. It may also display if there is a communication issue with the target wireless Access Point.

Wi-Fi Networks

To scan for a Wi-Fi network and connect to it:

1. From a Home screen, tap **Apps** > **Settings**.
2. Tap **Wi-Fi**, and then tap **On/Off** to turn Wi-Fi on.
   - When Wi-Fi is turned on, your device automatically scans for available networks and displays them.
3. Tap the network you want to connect to.
   - When you select an open network, you are automatically connected to the network. Otherwise, enter a password to connect.

Manually Connect to a Wi-Fi Network

You can connect your device to a Wi-Fi network manually.

1. From a Home screen, tap **Apps** > **Settings**.
2. Tap **Wi-Fi**, and then tap **On/Off** to turn Wi-Fi on.
3. Tap **More** > **Add network**.
4. Enter information about the Wi-Fi network:
   - **Network name**: Enter the name of the Wi-Fi network.
   - **Security**: Select a security option and enter your password.
   - **Show advanced options**: Add advanced options such as IP settings and Proxy settings.
5. Tap **Connect** to store the new information and connect to your target wireless Access Point.

DRAFT
FOR INTERNAL USE ONLY

Wi-Fi Options

The Wi-Fi settings menu allows you to set up many of your device's advanced Wi-Fi services.

1. From a Home screen, tap **Apps** > **Settings**.
2. Tap **Wi-Fi**, and then tap **On/Off** to turn Wi-Fi on.
3. Tap **More** for options:
   - **Add network**: Manually add a Wi-Fi network.
   - **WPS push button**: Set up a connection to a WPS (Wi-Fi Protected Setup) router or other equipment.
   - **WPS PIN entry**: View the PIN used by your device to set up a PIN-secured connection to a Wi-Fi router or other equipment (not configurable).
   - **Smart network switch**: Connect automatically to a mobile network connection when the Wi-Fi connection is unstable.
   - **Advanced**:
     - **Network notification**: Receive notifications when open networks in range are detected.
     - **Hotspot 2.0**: Automatically connect to Wi-Fi access points that support Hotspot 2.0.
     - **Keep Wi-Fi on during sleep**: Specify when to disconnect from Wi-Fi.
     - **Install network certificates**: Install authentication certificates.
     - **MAC address**: View your device's MAC address, which is required when connecting to some secured networks (not configurable).
     - **IP address**: View your device's IP address (not configurable).
   - **Help**: Learn about setting up and using Wi-Fi networks, and other settings.

Wi-Fi Direct

Wi-Fi Direct allows direct device-to-device connections using Wi-Fi, without having to connect to a Wi-Fi network.

1. From a Home screen, tap **Apps** > **Settings**.
2. Tap **Wi-Fi**, and then tap **On/Off** to turn Wi-Fi on.
   - Wi-Fi must be on to configure settings.
3. Tap **Wi-Fi Direct**. Your device automatically scans for nearby Wi-Fi Direct devices.
4. Select a device, and then follow the prompts to complete the connection.

Wi-Fi Direct Status Indicator

Status bar icons indicate your current Wi-Fi Direct connection status:

- When your device is connected to another device using Wi-Fi Direct, **Wi-Fi Direct** is displayed in the Status bar.

DRAFT
FOR INTERNAL USE ONLY

Bluetooth

Bluetooth is a short-range communications technology that connects your device wirelessly to a number of Bluetooth devices, such as headsets and hands-free car Bluetooth systems, and Bluetooth-enabled computers, printers, and wireless devices.

Note: The Bluetooth communication range is approximately 30 feet.

Turn Bluetooth On or Off

Use the settings menu to turn your device's Bluetooth on or off.

1. From a Home screen, tap **Apps** > **Settings**.
2. Tap **Bluetooth**, and then tap **On/Off** to turn Bluetooth on or off.

Bluetooth Status Indicator

Status bar icons indicate your current Bluetooth connection status:

- When Bluetooth is turned on, **Bluetooth** is displayed in the Status bar.

Scan for Bluetooth Devices

When you want to pair with another Bluetooth device, you can scan for nearby devices that are visible.

1. From a Home screen, tap **Apps** > **Settings**.
2. Tap **Bluetooth**, and then tap **On/Off** to turn on Bluetooth.
   - When Bluetooth is first turned on, it scans for nearby Bluetooth devices and displays them.
   - To manually perform a new scan, tap **Scan**.

Pair Bluetooth Devices

The Bluetooth pairing process allows you to establish trusted connections between your device and another Bluetooth device.

Pairing between two Bluetooth devices is a one-time process. Once a pairing is created, the devices continue to recognize their partnership and exchange information without having to re-enter a passcode.

1. From a Home screen, tap **Apps** > **Settings**.
2. Tap **Bluetooth**, and then tap **On/Off** to turn on Bluetooth.
   - Make sure that the target device is discoverable so that your device can find it. Refer to the instructions that came with the device to find out how to set it to discoverable mode.
3. Tap the name of the target device when you see it displayed in the Bluetooth devices section.
   - Your device automatically tries to pair with the target device. If automatic pairing fails, enter the passcode supplied with the target device.

Note: Due to different specifications and features of other Bluetooth-compatible devices, display and operations may be different, and functions such as transfer or exchange may not be possible with all Bluetooth compatible devices.

DRAFT
FOR INTERNAL USE ONLY

Rename a Paired Device

Once you have paired your device to another device, you can rename the paired device to make it easier to recognize.

1. From a Home screen, tap **Apps** > **Settings**.
2. Tap **Bluetooth**, and then tap **On/Off** to turn on Bluetooth.
3. Tap **Settings** next to the previously paired device, and then tap **Rename**.
4. Enter a new name, and tap **Rename**.

Delete a Paired Device (Unpair)

When you unpair from a Bluetooth device, the two devices no longer recognize each other. To connect again, you have to pair the devices.

1. From a Home screen, tap **Apps** > **Settings**.
2. Tap **Bluetooth**, and then tap **On/Off** to turn on Bluetooth.
3. Tap **Settings** next to the paired device, and then tap **Unpair** to delete the paired device.

DRAFT
FOR INTERNAL USE ONLY

Airplane Mode

Airplane mode disconnects your device from all networks and turns off connectivity features, such as Wi-Fi and Bluetooth.

While in Airplane mode, you can use other features such as playing music, watching videos, and other offline applications.

Enable Airplane Mode

To enable or disable Airplane mode:

1. From a Home screen, tap **Apps** > **Settings**.
2. Tap **Airplane mode**, and then tap **On/Off** to enable or disable the option.

DRAFT
FOR INTERNAL USE ONLY

Mobile HotSpot and Tethering

Use Mobile HotSpot and Tethering to share your device's Internet connection with other devices.

Enable Mobile HotSpot

Activate Mobile HotSpot to allow other devices to use your device's Internet connection.

Note: You must have a tethering plan on your service account in order to use Mobile HotSpot.

Warning: Mobile HotSpot consumes battery power and uses data service.

1. From a Home screen, tap **Apps** > **Settings**.
2. Tap **Mobile HotSpot and Tethering** > **Mobile HotSpot**.
3. Tap **On/Off** to turn Mobile HotSpot on or off.

Connect a Device to Your Mobile HotSpot

Use the other device's Wi-Fi control to connect to Mobile HotSpot.

1. From a Home screen, tap **Apps** > **Settings**.
2. Tap **Mobile HotSpot and Tethering** > **Mobile HotSpot**.
3. Tap **On/Off** to turn on Mobile HotSpot.
4. Activate Wi-Fi on the target device.
5. Scan for Wi-Fi HotSpots and select the target device from the list.
6. Enter your device's Mobile HotSpot password on the target device.

Change the Mobile HotSpot Password

You can change your Mobile HotSpot password.

1. From a Home screen, tap **Apps** > **Settings**.
2. Tap **Mobile HotSpot and Tethering** > **Mobile HotSpot**.
3. Tap **On/Off** to turn on Mobile HotSpot.
4. Tap the password and enter a new password.
5. Tap **Save**.

Allowed Devices List

Control whether devices connect to your Mobile HotSpot with the Allowed devices list. After you add devices to the list, they can scan for your device and connect using your device's Mobile HotSpot name and password.

Note: Using your device as a Mobile HotSpot consumes battery power and uses data service. While Mobile HotSpot is active, your device's applications use the Mobile HotSpot data service. Roaming while using your device as a Mobile HotSpot incurs extra data charges.

1. From a Home screen, tap **Apps** > **Settings**.
2. Tap **Mobile HotSpot and Tethering** > **Mobile HotSpot**.
3. Tap **On/Off** to turn on Mobile HotSpot.
4. Tap **More** > **Allowed devices**, and then tap **Add** to enter the other device's Device name and MAC address.
5. Tap **Add** to add the device.

DRAFT
FOR INTERNAL USE ONLY

Configure Mobile HotSpot Settings

Manage your Mobile HotSpot security and connecting settings.

1. From a Home screen, tap **Apps** > **Settings**.
2. Tap **Mobile HotSpot and Tethering** > **Mobile HotSpot**.
3. Tap **More** > **Configure Mobile HotSpot** for the following settings:
   - **Network name**: View and change the name of your Mobile HotSpot.
   - **Broadcast network name (SSID)**: Enable to make your Mobile HotSpot visible to other Wi-Fi devices during a scan. When disabled, other devices can still connect to your Mobile HotSpot, but have to set up the connection manually with your Network SSID and Password.
   - **Security**: Choose the security level for your Mobile HotSpot.
   - **Password**: If you choose a security level that uses a password, enter the password. A default password is displayed on the Mobile HotSpot screen.
   - **Show password**: Display your password instead of masking it.
   - **Show advanced options**: Access advanced options, including Broadcast channel, the number of devices that can connect to your Mobile HotSpot, and timeout settings.

Tethering Your Device

You can use USB tethering to share your device's Internet connection with a computer.

1. From a Home screen, tap **Apps** > **Settings**.
2. Tap **Mobile HotSpot and Tethering**.
3. Connect the computer to the device using the USB cable, and then tap **USB tethering** to turn tethering on.

DRAFT
FOR INTERNAL USE ONLY

Data Usage

Monitor how your data is being used, and set limits and restrictions to conserve it.

Note: Your service provider may account for data usage differently.

1. From a Home screen, tap **Apps** > **Settings**.
2. Tap **Data usage** for options:
   - **Data usage cycle**: Tap the drop-down menu, and then choose a time period for data usage. Data usage for the period is displayed on the graph, along with usage by application at the bottom of the screen.
   - **Mobile data**: Enable mobile data. You can also control Mobile Data at the Notification panel.
   - **Set mobile data limit**: Your mobile data connection is turned off when the specified limit is reached.
   - **Upgrade data service**: Explore data plan upgrade options for your rate plan.
   - **By application**: View data usage by application.
3. Tap **More** for the following options:
   - **Restrict background data**: Restrict some apps and services from working unless you are connected to a Wi-Fi network.
   - **Show/Hide Wi-Fi usage**: Display or hide a Wi-Fi tab that shows Wi-Fi usage.
   - **Restrict networks**: Select Wi-Fi networks that are mobile hotspots. You can restrict apps from using these networks, and you can configure apps to warn you before using these networks for large downloads.
   - **Help**: View help topics for data usage.

DRAFT
FOR INTERNAL USE ONLY

Mobile Networks

Control your device's access to networks and mobile data service.

1. From a Home screen, tap **Apps** > **Settings**.
2. Tap **Mobile networks** for options:
   - **Data roaming**: Allow your device to connect to data services while roaming. Significantly higher charges may result.
   - **Access Point Names**: Add and edit APNs.
   - **Network mode**: Choose a preferred network mode.
   - **Network operators**: Search, select and setup available networks.

DRAFT
FOR INTERNAL USE ONLY

More Connection Settings

The More connection settings allow you to configure a variety of connectivity settings for your device.

Nearby Device Scanning

Scan for nearby devices to connect to and set them up easily. You receive a notification when there are available devices to connect to.

Note: This function uses Bluetooth Low Energy scanning even if Bluetooth is turned off on your device.

To enable nearby device scanning:

1. From a Home screen, tap **Apps** > **Settings**.
2. Tap **More connection settings** > **Nearby device scanning**.
3. Tap **On/Off** to enable the feature.

Printing

Print images and documents to Samsung printers and other compatible printers (not included).

1. From a Home screen, tap **Apps** > **Settings**.
2. Tap **More connection settings** > **Printing**.
3. Tap a print service and follow the prompts.

Note: Tap **Download plug-in** to install additional print service drivers.

Virtual Private Networks (VPN)

Set up and manage your Virtual Private Networks (VPNs).

Note: You must set a secured screen lock before setting up a VPN. For more information, see Set a Screen Lock.

Add a VPN

Use the VPN settings menu to add a VPN connection to your device.

1. From a Home screen, tap **Apps** > **Settings**.
2. Tap **More connection settings** > **VPN**.
3. Tap **Add VPN**, and follow the prompts to set up your VPN.

Connect to a VPN

To connect to a VPN:

1. From a Home screen, tap **Apps** > **Settings**.
2. Tap **More connection settings** > **VPN**.
3. Tap the VPN, enter your log in information, and tap **Connect**.

Disconnect from a VPN

To disconnect from a VPN:

1. From a Home screen, tap **Apps** > **Settings**.
2. Tap **More connection settings** > **VPN**.
3. Tap the VPN, and tap **Disconnect**.

DRAFT
FOR INTERNAL USE ONLY

Edit or Delete a VPN

Once you have set up a VPN connection, you can edit or delete the connection.

1. From a Home screen, tap **Apps** > **Settings**.
2. Tap **More connection settings** > **VPN**.
3. Tap **Settings** next to the VPN that you want to edit or delete.
4. Edit the VPN and tap **Save**.

   – or –

   Tap **Delete** to delete the VPN.

Ethernet

Manage your Ethernet connections.

1. From a Home screen, tap **Apps** > **Settings**.
2. Tap **More connection settings**.
3. Tap **Ethernet** and follow the prompts to connect to an Ethernet network.

DRAFT
FOR INTERNAL USE ONLY

Smart Manager

Smart manager provides an overview of the status of your device's battery, storage, RAM, and device security. You can also automatically optimize your device's system resources.

Access Smart Manager

To access Smart Manager:

1. From a Home screen, tap **Apps** > **Settings**.
2. Tap **Smart Manager**.

Quick Optimization

The quick optimization feature improves device performance through the following actions:

- Identifying apps that use excessive battery power and clearing unneeded items from memory.
- Deleting unnecessary files and closing apps running in the background.
- Scanning for malware.

To use the quick optimization feature:

1. From a Home screen, tap **Apps** > **Settings**.
2. Tap **Smart Manager**.
3. Tap **Clean all**.

Use Smart Manager

To use the Smart Manager options:

1. From a Home screen, tap **Apps** > **Settings**.
2. Tap **Smart Manager**.
3. Tap each of the following for options:
   - **Battery**: Check the battery power and time remaining to use the device. For devices with low battery levels, conserve battery power by activating power saving features and closing apps that are consuming an excessive amount of battery power.
     - The usage time remaining shows the time remaining before the battery power runs out. Usage time remaining may vary depending on your device settings and operating conditions.
   - **Storage**: Check the status of used and available memory capacity. You can delete unused or unneeded files, and uninstall apps that you no longer use.
   - **RAM**: Check the amount of available RAM. You can close background apps and reduce the amount of RAM you are using to speed up your device.
   - **Device security**: Check the device's security status. This feature scans your device for malware.
     - Tap **Install My KNOX** to activate KNOX active protection on your device.

DRAFT
FOR INTERNAL USE ONLY

Applications Settings

Manage settings for applications on your device.

Application Manager

You can download and install new applications on your device. Use Application manager settings to manage your downloaded and preloaded applications.

Warning: Because this device can be configured with system software not provided by or supported by Google or any other company, you operate this software at your own risk.

Application Manager Options

If you have disabled apps, you can choose whether to display them.

1. From a Home screen, tap **Apps** > **Settings**.
2. Tap **Applications** > **Application manager**.
3. If you have disabled applications:
   - Tap **All apps** at the top left of the screen.
   - Tap **All apps**, **Turned on**, or **Disabled**.
4. Tap **More** for the following options:
   - **Show/Hide system apps**: Show or hide system (background) apps.
   - **Apps that can appear on top**: Choose apps that can run on top of other running apps.
   - **Change system settings**: Select which apps can change system settings.
   - **Reset app preferences**: Reset options that have been changed. Existing app data is not deleted.

Note: Options vary by application.

Manage Apps

You can view and update information about an application, including memory usage, default settings, and permissions.

1. From a Home screen, tap **Apps** > **Settings**.
2. Tap **Applications** > **Application manager**.
3. Tap an application to view and update information about the application. The following options are displayed:
   - **Uninstall/Disable**: Uninstall or disable the application. Preloaded apps can only be disabled.
   - **Force stop**: Stop an app that is misbehaving. Restart your device if stopping an app, process, or service causes your device to stop working correctly.
   - **Storage**: Manage the app's storage usage.
   - **Data usage**: View mobile data usage.
   - **Permissions**: View permissions granted to the app for access to your device's information.
   - **Notifications**: Configure notifications from the app.
   - **Set as default**: Set the app as a default for a certain category of apps.
   - **Battery**: View battery usage since the last full charge.
   - **Memory**: View memory usage.

DRAFT
FOR INTERNAL USE ONLY

Default Applications

If you have multiple applications of the same type, such as email apps, you can select one app to be the default.

You can also use a simpler Home screen that provides an easier user experience for first-time users.

1. From a Home screen, tap **Apps** > **Settings**.
2. Tap **Applications** > **Default applications**.
3. Tap the following to choose default apps:
   - **Browser app**: Choose a default browser app.
   - **Messaging app**: Choose a default messaging (text and multimedia) app.
   - **Set as default**: Choose default apps for other functions.
   - **Home screen**: Choose a Home screen type.
   - **Device assistance app**: Choose an app that provides assistance for using your device.

Application Settings

Shortcuts to the settings for various apps are available in one convenient location.

1. From a Home screen, tap **Apps** > **Settings**.
2. Tap **Applications**.
3. Tap one of the following to display the settings for the selected app:
   - Calendar
   - Camera
   - Contacts
   - Email
   - Internet
   - Messages
   - Music
   - Weather
   - Google

DRAFT
FOR INTERNAL USE ONLY

Sounds and Vibrations

Configure the sounds and vibrations used to indicate notifications, screen touches, and other interactions.

Sound Mode

You can switch between sound modes, while preserving the individual sound settings you have made.

1. From a Home screen, tap **Apps** > **Settings**.
2. Tap **Sounds and vibrations** > **Sound mode**, and then choose a mode:
   - **Sound**: Use the sounds, vibrations, and volume levels you have chosen in Sound settings for notifications and alerts.
   - **Vibrate**: Vibrate for notifications and alerts. This uses the Vibration intensity you choose in Sound settings.
   - **Mute**: Mute all sounds and notifications.

Volume

Set the system volume level and default volume for call ringtones, notifications, and other audio.

Tip: You can also set the Ringtone volume from a Home screen by pressing the **Volume** key.

1. From a Home screen, tap **Apps** > **Settings**.
2. Tap **Sounds and vibrations** > **Volume** and drag the sliders to set the default volume for:
   - Notifications
   - Media
   - System

Vibration Intensity

Set the amount of vibration for incoming calls, notifications, and haptic feedback.

1. From a Home screen, tap **Apps** > **Settings**.
2. Tap **Sounds and vibrations** > **Vibration intensity**.
3. Drag the sliders to set the various vibration intensities.

Notification Sounds

Choose a sound for notifications, such as for new messages and event reminders.

1. From a Home screen, tap **Apps** > **Settings**.
2. Tap **Sounds and vibrations** > **Notification sounds** and configure the following options:
   - **Default notification sound**: Choose a default sound for all notifications.
   - **Messages notifications**: Choose a sound for message notifications, and enable or disable vibration alert.
   - **Calendar notifications**: Choose a sound for calendar notifications, and enable or disable vibration alert.
   - **Email notifications**: Configure email account notifications. An email account must be configured for this option to be available.

DRAFT
FOR INTERNAL USE ONLY

Do Not Disturb

This setting allows you to block all notifications and alerts. The options below determine what notifications can make sounds, and during what time periods you want to enter this mode.

To activate Do not disturb mode:

1. From a Home screen, tap **Apps** > **Settings**.
2. Tap **Sounds and vibrations** > **Do not disturb**.
3. Tap **Turn on now** to enable this option.

Scheduling

This option allows you to turn Do not disturb mode on or off automatically at scheduled times.

Note: Scheduling is not available if Do not disturb mode has been turned on manually.

1. From a Home screen, tap **Apps** > **Settings**.
2. Tap **Sounds and vibrations** > **Do not disturb**.
3. Tap **Turn on as scheduled**, and set the Days, Start time, and End time.

Allow Exceptions

This option lets you customize which notifications are allowed while your device is in Do not disturb mode.

1. From a Home screen, tap **Apps** > **Settings**.
2. Tap **Sounds and vibrations** > **Do not disturb**.
3. Tap **Allow exceptions**, and tap one of the following options:
   - No exceptions
   - Alarms only
   - Custom

System Sounds

Set various other system sound options.

1. From a Home screen, tap **Apps** > **Settings**.
2. Tap **Sounds and vibrations**, and tap to enable each option:
   - **Touch sounds**: Play tones when you touch or tap the screen to make selections.
   - **Screen lock sounds**: Play a sound when you unlock the screen.
   - **Charging sound**: Play a sound when a charger is connected.
   - **Vibration feedback**: Vibrate when **Back** or **Recent** are tapped, and for other actions.

Key-Tap Feedback

Play tones when the dialing keypad or the keyboard is tapped.

1. From a Home screen, tap **Apps** > **Settings**.
2. Tap **Sounds and vibrations**, and tap to enable each option:
   - **Keyboard sound**: Play a sound when the Samsung keyboard is tapped.
   - **Keyboard vibration**: Vibrate when the Samsung keyboard is tapped.

DRAFT
FOR INTERNAL USE ONLY

Sound Quality and Effects

You can enable sound effects when connected to a headset.

Note: Sound effects are only available when headphones or a compatible Bluetooth headset (not included) is connected.

Choose from advanced sound options to customize your audio experience.

1. From a Home screen, tap **Apps** > **Settings**.
2. Tap **Sounds and vibrations** > **Sound quality and effects**.
3. Tap **Adapt sound** and follow the prompts to customize your sound settings.
4. Tap **On/Off** to enable each option:
   - **SoundAlive+**: Recreate the effects of rich surround sound.
   - **Tube Amp**: Simulate the soft timbre of a tube amplifier.

DRAFT
FOR INTERNAL USE ONLY

Notifications

Select which apps you want to receive alerts from. Alerts include notifications, sounds, and vibrations.

1. From a Home screen, tap **Apps** > **Settings**.
2. Tap **Notifications**.
3. Tap **On/Off** next to an app to enable or disable notifications.
   - Tap **Advanced** to configure more notification options for individual apps.

DRAFT
FOR INTERNAL USE ONLY

Display Settings

Configure your display's brightness, screen timeout delay, and other display settings.

Brightness

Adjust the screen brightness to suit your surroundings or personal preference. You may also want to adjust screen brightness to conserve battery power.

1. From a Home screen, tap **Apps** > **Settings**.
2. Tap **Display**.
3. Customize options under Brightness:
   - Drag the **Brightness** slider to set a custom brightness level.
   - Tap **Auto** to allow the device to adjust brightness automatically.

Note: You can also control Brightness from the Notification panel.

Font Size and Style

You can set the font size and style for all text that is displayed on the screen.

1. From a Home screen, tap **Apps** > **Settings**.
2. Tap **Display** > **Font** to choose a font size and style.
   - Drag the slider to adjust the font size.
   - Tap a font style to select a font, or tap **Download fonts** to find new fonts from Galaxy Apps.
3. Tap **OK** to set the font size and style.

Icon Backgrounds

You can show icons with a shaded background to make them stand out on the Home screen and Apps list screen.

1. From a Home screen, tap **Apps** > **Settings**.
2. Tap **Display** > **Icon backgrounds** and choose one of the following options:
   - **Icons only**: Show icons only.
   - **Icons with backgrounds**: Show icons with shaded backgrounds.
3. Tap **Done**, and confirm when prompted.

Screen Timeout

Turn the screen off after a set amount of time.

1. From a Home screen, tap **Apps** > **Settings**.
2. Tap **Display** > **Screen timeout** and choose a time period.

Smart Stay

The screen does not time out as long as you are facing the front camera.

1. From a Home screen, tap **Apps** > **Settings**.
2. Tap **Display** > **Smart stay**, and tap **On/Off** to turn the feature on.

DRAFT
FOR INTERNAL USE ONLY

Select a Screen Mode

Choose a screen mode to match your type of viewing.

1. From a Home screen, tap **Apps** > **Settings**.
2. Tap **Display** > **Screen mode** and choose a screen mode:
   - Tap **Adaptive display** if you want your device to automatically optimize the display to match the type of image displayed and other criteria, such as battery level.

     – or –

     Choose a specific type of screen mode based on what you are viewing.

Screen Saver

The Screen saver setting controls what is displayed on the screen when the device is docked (dock not included) or while charging. You can choose to display colors or display photos.

1. From a Home screen, tap **Apps** > **Settings**.
2. Tap **Display** > **Screen saver**.
3. Tap **On/Off** to enable the Screen saver.
4. Configure options:
   - **Colors**: Tap the selector to display a changing screen of colors.
   - **Photo Table**: Display pictures in a photo table. Tap **Settings** for options.
   - **Photo frame**: Display pictures in a photo frame. Tap **Settings** for options.
   - **Photos**: Display pictures from your Google Photos account. Tap **Settings** for options.
5. Tap **More** for additional options:
   - **Preview**: See a demonstration of Screen saver.
   - **Select when to use**: Select when your device can go into Screen saver mode.

DRAFT
FOR INTERNAL USE ONLY

Advanced Features

Configure features on your device that make it easier to use.

You can control certain device actions by picking up the device and by touching the screen with the palm of your hand or turning over the device.

1. From a Home screen, tap **Apps** > **Settings**.
2. Tap **Advanced features**.
3. Tap **On/Off** to enable each of the following:
   - **Pop-up view gesture**: View an app in pop-up view by swiping downwards diagonally from either corner at the top of the screen while the app is open and shown on the screen.
   - **Smart capture**: Capture an image of any scrollable areas of the screen that are currently hidden, as well as the area that is visible, and crop and share the screenshot immediately.
   - **Palm swipe to capture**: Capture an image of the screen by swiping the edge of your hand across it, from side to side, keeping in contact with the screen.
   - **Easy mute**: Mute sounds and video by covering the screen or turning over the device.

DRAFT
FOR INTERNAL USE ONLY

Users

Share this tablet with multiple people by creating User accounts.

Users have their own space, which they can customize with their own apps, wallpaper, and settings. Users can also adjust tablet settings like Wi-Fi, which affects everyone.

Restricted profiles allow only limited access to apps and content.

Set Up User Profiles

Set up user profiles and then select one when unlocking the device to use personalized settings.

1. From a Home screen, tap **Apps** > **Settings**.
2. Tap **Users**.
3. Tap **Add user or profile** and follow the instructions to set up a new user or profile.

Delete a User or Profile

To delete a user or profile:

1. From a Home screen, tap **Apps** > **Settings**.
2. Tap **Users**.
3. Tap **Delete user** next to a User profile to delete it.

Note: Only the device owner can delete other users or profiles. Deleting a user's profile removes the user account from the device entirely. This includes the user's Google Account, Samsung account, and any other local accounts associated with the user.

Switch User Profiles

To access the device with a user profile:

► From a Lock screen, tap **Manage users** for the user or profile.

Change User Account Nicknames and Photo IDs

The photo and name each user uses in their personal Contact entry (listed under **My profile** at the top of their Contacts list) is used as their User ID and name.

To change their ID photo and name, each user can edit their personal Contact entry. For more information, see Edit a Contact.

DRAFT
FOR INTERNAL USE ONLY

Wallpaper

Change the look of the Home and Lock screens with wallpaper.

You can display a favorite picture or choose from preloaded wallpapers.

To change wallpaper:

1. From a Home screen, tap **Apps** > **Settings**.
2. Tap **Wallpaper**.
3. Tap **Home screen**, **Lock screen**, or **Home and lock screen**.
4. Tap an image to preview it, and then tap **Set as wallpaper**.
   - Tap **From Gallery** for additional wallpapers.

DRAFT
FOR INTERNAL USE ONLY

Home Screen Settings

Customize your Home screen by adding application shortcuts, widgets, folders, and using wallpapers.

To customize Home screen:

► From a Home screen, tap **Apps** > **Settings** > **Home screen**.

- or -

From a Home screen, either touch and hold an empty space on a screen or pinch the screen.

For more information, see Home Screen.

DRAFT
FOR INTERNAL USE ONLY

Lock Screen and Security

Secure your device and protect your data with Lock Screen and Security settings.

Set a Screen Lock

It is recommended that you secure your device using a Screen lock.

1. From a Home screen, tap **Apps** > **Settings**.
2. Tap **Lock screen and security** > **Screen lock type** to select a screen lock and level of security:
   - **Swipe**: Swipe the screen to unlock it. This option provides no security.
   - **Pattern**: Create a pattern that you draw on the screen to unlock your device. This option provides medium security.
   - **PIN**: Select a PIN to use for unlocking the screen. This option provides medium to high security.
   - **Password**: Create a password for unlocking the screen. This option provides high security.
   - **None**: Do not lock the screen.
   - **Fingerprints**: Use fingerprint recognition to unlock the screen. This option provides medium to high security.
3. Select your notification preferences, if you choose a secured lock screen option:
   - Show content
   - Hide content
   - Do not show notifications
4. Tap **Set up** to set up and use fingerprints to unlock the device in addition to a PIN, pattern, or password. Tap **Later** to skip fingerprints setup.
5. Choose a screen lock option:
   - **Info and app shortcuts**: Display a dual clock, owner information, or app shortcuts on the Lock screen.
   - **Notifications on lock screen**: Show notifications on the Lock screen.
   - **Secure lock settings**: Set your secure lock functions such as Secured lock time and Smart lock. This option is not available with Swipe.

Note: Options vary based on the screen lock type.

Fingerprints

Use fingerprint recognition as an alternative to entering passwords in certain apps.

You can also use your fingerprint to verify your identity when logging in to your Samsung account.

Note: Fingerprint recognition uses the unique characteristics of each fingerprint to enhance the security of your device. The likelihood of the fingerprint sensor confusing even small areas of two different fingerprints is very low. **But in rare cases, the sensor may recognize a fingerprint that is similar to a registered fingerprint.**

DRAFT
FOR INTERNAL USE ONLY

Register a Fingerprint

You can register up to three fingerprints. A password is also be set up as an alternative to your fingerprint.

1. From a Home screen, tap **Apps** > **Settings**.
2. Tap **Lock screen and security** > **Fingerprints**.
3. Set up a Pattern, PIN, or Password to unlock your device in addition to using your fingerprint.
4. Follow the prompts to register a fingerprint.
   - You can register up to three fingerprints.

Fingerprint Verification

Fingerprint verification can be used for other accounts accessed from your device.

1. From a Home screen, tap **Apps** > **Settings**.
2. Tap **Lock screen and security** > **Fingerprints**.
   - **Web sign-in**: Access your online accounts using your fingerprint.
   - **Verify Samsung account**: Verify your identity using your fingerprint when logging in to your Samsung account.
   - **Fingerprint unlock**: Tap **On/Off** to enable or disable fingerprint security.

Find My Mobile

Protect your device from loss or theft allowing your device to be locked, tracked, and for your data to be deleted remotely.

► To access your device remotely, visit findmymobile.samsung.com.

Note: You must sign up for a Samsung account and enable Google location service to use Find My Mobile.

1. From a Home screen, tap **Apps** > **Settings**.
2. Tap **Lock screen and security** > **Find My Mobile**.
3. Enter your Samsung account password or, if you are not logged in to your Samsung account, tap **Add account** and follow the prompts. The following options are available:
   - **Remote controls**: Activate or deactivate Remote controls, which allows you to access your device remotely.
   - **Google location service**: Activate or deactivate Google location service. This service must be on in order to find your device.
   - **SIM change alert**: Prevent unauthorized changes to your SIM card by being alerted whenever an app or service attempts to change data on your SIM card.

DRAFT
FOR INTERNAL USE ONLY

Unknown Sources

Enable installation of non-Google Play applications.

1. From a Home screen, tap **Apps** > **Settings**.
2. Tap **Lock screen and security** > **Unknown sources** to enable this option.

Warning: Enabling installation of third-party applications can cause your device and personal data to be more vulnerable to attacks by unknown sources.

Encrypt Device

Require a numeric PIN or password to decrypt your device each time you power it on.

1. From a Home screen, tap **Apps** > **Settings**.
2. Tap **Lock screen and security** > **Encrypt device**.
3. Tap **Encrypt device** and follow the prompts to encrypt all data on your device.

Encrypt SD Card

Require a numeric PIN or password to decrypt your SD card (not included) when you first access it after powering on your device.

1. From a Home screen, tap **Apps** > **Settings**.
2. Tap **Lock screen and security** > **Encrypt SD card**.
3. Tap **Encrypt SD card** and follow the prompts to encrypt all data on your memory card.

Other Security Settings

Set Up SIM Card Lock

Require both your SIM card PIN and your ordinary screen lock type when unlocking the device.

1. From a Home screen, tap **Apps** > **Settings**.
2. Tap **Lock screen and security** > **Other security settings** > **Set up SIM card lock** and follow the prompts.
   - To change your SIM card PIN, tap **Change SIM card PIN**.

View Passwords

Display password characters briefly as you type them.

1. From a Home screen, tap **Apps** > **Settings**.
2. Tap **Lock screen and security** > **Other security settings** > **Make passwords visible** to turn the feature on.

Security Update Service

Automatically receive security updates.

1. From a Home screen, tap **Apps** > **Settings**.
2. Tap **Lock screen and security** > **Other security settings** for the following Security update service options:
   - **Security policy updates**: Automatically or manually check for security policy updates.
     - Automatic updates can also be limited to only when your device is connected to a Wi-Fi network.
   - **Send security reports**: Use Wi-Fi to send security reports to Samsung for threat analysis.

DRAFT
FOR INTERNAL USE ONLY

Device Administration

Manage your device administrators and application installation privileges.

1. From a Home screen, tap **Apps** > **Settings**.
2. Tap **Lock screen and security** > **Other security settings** > **Device administrators**.
3. Tap **Android Device Manager** to allow it to lock or erase a lost device.

Credential Storage

Manage your security certificates. If a certificate authority (CA) certificate gets compromised or for some other reason you do not trust it, you can disable or remove it.

1. From a Home screen, tap **Apps** > **Settings**.
2. Tap **Lock screen and security** > **Other security settings** for the following Credential storage options:
   - **Storage type**: Select a storage location for credential contents.
   - **View security certificates**: Display certificates in your device's ROM and other certificates you have installed.
   - **User certificates**: View user certificates.
   - **Install from device storage**: Install a new certificate from storage.
   - **Clear credentials**: Erase the credential contents from the device and reset the password.

Advanced Security Settings

Use these options to configure advanced security settings.

1. From a Home screen, tap **Apps** > **Settings**.
2. Tap **Lock screen and security** > **Other security settings** for the following advanced options:
   - **Trust agents**: Perform selected actions when trusted devices are connected.
     - To view Trust agents, set up a secured screen lock (Password, PIN, Pattern, or Fingerprints). For more information, see Set a Screen Lock.
   - **Pin windows**: Pin an app on your device screen, preventing access to other features of your device.
   - **Usage data access**: View the applications that can access your device's usage history.
   - **Notification access**: View the applications that can access notifications you receive on your device.
   - **Do not disturb permission**: View which apps have permission to change the Do not disturb settings.

DRAFT
FOR INTERNAL USE ONLY

Privacy

Choose from various modes designed to hide personal content from being accessed by anyone else using your device, or to aid you in an emergency.

Note: A secure screen lock (Pattern, PIN, Fingerprint, or Password) is required to use Private Mode.

Location

Some apps, such as Google Maps, may require one or more location services be turned on for full functionality.

Locating Method

Before using any features that require location assistance, you must enable your device's location services.

1. From a Home screen, tap **Apps** > **Settings**.
2. Tap **Privacy** > **Location**.
3. Tap **On/Off** to turn on Location services.
4. Tap **Locating method** to select how your location is determined:
   - **GPS, Wi-Fi, and mobile networks**: Uses GPS, Wi-Fi, and mobile networks.
   - **Wi-Fi and mobile networks**: Uses Wi-Fi and mobile networks (no GPS).
   - **GPS only**: Uses GPS only.
5. Tap **Improve accuracy** to use other connections for determining your location:
   - **Wi-Fi scanning**: Allow apps and services to scan for Wi-Fi networks automatically, even when Wi-Fi is turned off.
   - **Bluetooth scanning**: Allow apps to scan for and connect to nearby devices automatically through Bluetooth, even when Bluetooth is turned off.

Recent Location Requests

Apps that have requested your location are listed under Recent location requests.

1. From a Home screen, tap **Apps** > **Settings**.
2. Tap **Privacy** > **Location**.
3. Tap **On/Off** to turn on Location services.
4. Tap an entry under **Recent location requests** to view the app's settings.

Location Services

Google Location History™ stores and uses your device's most recent location data. Google apps, such as Google Maps, can use this data to improve your search results based on places that you have visited.

1. From a Home screen, tap **Apps** > **Settings**.
2. Tap **Privacy** > **Location**.
3. Tap **On/Off** to turn on Location services.
4. Tap **Google Location History** and sign in to your Google Account for more options.

DRAFT
FOR INTERNAL USE ONLY

App Permissions

Control which apps have permissions to use certain features of your device.

1. From a Home screen, tap **Apps** > **Settings**.
2. Tap **Privacy** > **App permissions**.
3. Tap the following features to see which apps have permission to access them:
   - Body sensors
   - Calendar
   - Camera
   - Contacts
   - Location
   - Microphone
   - Phone
   - SMS
   - Storage
   - Additional permissions
4. Tap **On/Off** next to each app to enable or disable permissions for that feature.

Private Mode

Hide personal content from being accessed by anyone else using your device. Private mode is only available for certain applications.

Note: A secure screen lock (Pattern, PIN, Password, or Fingerprint) is required to use Private mode.

1. From a Home screen, tap **Apps** > **Settings**.
2. Tap **Privacy** > **Private mode**.
3. Tap **On/Off** to enable Private mode.
4. Follow the prompts to learn about and set up Private mode.

Report Diagnostic Info

This feature sends diagnostic information about your device when you are having technical problems.

1. From a Home screen, tap **Apps** > **Settings**.
2. Tap **Privacy** > **Report diagnostic info**.
3. Read the consent information, and then tap **Yes** to enable this feature or tap **No thanks**.

DRAFT
FOR INTERNAL USE ONLY

Accessibility

Accessibility services are special features that make using the device easier for those with certain physical disabilities.

Note: You can download additional accessibility applications from the Google Play store.

1. From a Home screen, tap **Apps** > **Settings**.
2. Tap **Accessibility** for options:

Vision

- **Voice Assistant**: Give spoken feedback aloud to assist blind and low-vision users.
  - Voice Assistant can collect all of the text you enter, except passwords, including personal data and credit card numbers. It may also log your user interface interactions with the device.
- **Voice Assistant help**: View help on using Voice Assistant.
- **Dark screen**: Keep the screen turned off at all times for privacy.
- **Rapid key input**: Release your finger to enter selection instead of double tapping.
- **Speak passwords**: Read the characters aloud as you enter your passwords.
- **Text-to-speech**: Set your preferred TTS engine and options. For more information, see Text-To-Speech Options.
- **Accessibility shortcut**: Quickly enable accessibility features in two quick steps.
- **Font size**: Set the font size.
- **High contrast fonts**: Adjust the color and outline of fonts to increase the contrast with the background.
- **High contrast keyboard**: Adjust the size of the Samsung keyboard and change its colors to increase the contrast between the keys and the background.
- **Show button shapes**: Show buttons with shaded backgrounds to make them stand out.
- **Magnifier window**: Magnify content shown on the screen.
- **Magnification gestures**: Use exaggerated gestures such as triple-tapping, double pinching, and dragging two fingers across the screen.
- **Grayscale**: Change all colors to gray.
- **Negative colors**: Reverse the display of colors from white text on a black background to black text on a white background.
- **Color adjustment**: Adjust the color of the screen if you are color blind or have difficulty reading the display because of the screen color.

Hearing

- **Turn off all sounds**: Turn off all notifications and audio for privacy.
- **Samsung subtitles (CC)**: Use Samsung subtitles with multimedia files when available.
- **Google subtitles (CC)**: Use Google subtitles with multimedia files when available.
- **Left/right sound balance**: Use the slider to set the left and right balance when using a stereo device.
- **Mono audio**: Switch audio from stereo to mono for use with one earphone.

DRAFT
FOR INTERNAL USE ONLY

Dexterity and interaction

- **Universal switch**: Control your device with your customized switches.
- **Assistant menu**: Improve the device accessibility for users with reduced dexterity.
- **Press and hold delay**: Select a time interval for this action.
- **Interaction control**: Block areas of the screen from touch interaction. Disable auto screen rotation and hard key functions. Only show application notifications in the Notification panel and the Status bar.

More settings

- **Direction lock**: Unlock the screen by swiping in a series of four to eight directions.
- **Direct access**: Open your accessibility settings by pressing the Home key quickly three times in succession.
- **Notification reminder**: Beep at set intervals to remind you of any unread notifications.
- **Single tap mode**: Dismiss or snooze alarms, calendar events, and timer alerts.
- **Manage accessibility**: Import and export your accessibility settings, or share them with other devices.

Services

Additional accessibility apps may be downloaded from the Google Play store. Certain accessibility services you install may be configured here.

DRAFT
FOR INTERNAL USE ONLY

Accounts

Set up and manage accounts, including your Google Account, Samsung account, email, and social networking accounts.

Depending on the account, you can choose to synchronize your calendar, contacts, and other types of content.

Add an Account

You can add and manage all your email, social networking, and picture and video sharing accounts.

1. From a Home screen, tap **Apps** > **Settings**.
2. Tap **Accounts** > **Add account**.
3. Tap one of the account types.
4. Follow the prompts to enter your credentials and set up the account.

Synchronize Accounts

You can synchronize your calendar, contacts, and other types of accounts.

1. From a Home screen, tap **Apps** > **Settings**.
2. Tap **Accounts** > **[Account type]**.
3. Tap an account to view the sync settings for that account.
4. Tap individual data items to sync.
5. Tap **More** > **Sync all** or **Sync now** to synchronize the account.

Note: Sync options and the location of the sync command differ depending on the account type.

Account Settings

Each account has its own set of settings. In addition, you can configure common settings for all accounts of the same type.

Note: Account settings and available features vary between account types and service providers. Contact your service provider for more information on your account's settings.

1. From a Home screen, tap **Apps** > **Settings**.
2. Tap **Accounts** > **[Account type]**.
3. Tap an account to configure that account's sync settings.
4. Tap other available options for the account type.

Remove an Account

You can remove accounts from your device.

1. From a Home screen, tap **Apps** > **Settings**.
2. Tap **Accounts** > **[Account type]**.
3. Tap the account and then tap **More** > **Remove account**.

DRAFT
FOR INTERNAL USE ONLY

Google Settings

Configure your device's Google settings.

Customize Google

To customize your Google settings:

1. From a Home screen, tap **Apps** > **Settings**.
2. Tap **Google**, and select an option to customize:
   - **Sign-in & security**: Configure how you sign in to your Google Account, device access and notifications, and connected apps and sites.
   - **Personal info & privacy**: Manage your personal information, activity controls, ads settings, account overview, and control your content.
   - **Account preferences**: Configure your Google account language, Google Drive storage, accounts and services.
   - **Location**: Configure your Google location settings.
   - **Ads**: Configure your Google advertising profile.
   - **Connected apps**: Configure apps which use your Google account.
   - **Data management**: Configure your Google Drive app.
   - **Google Fit**: Configure Google Fit apps and devices (not included).
   - **Nearby**: Use your device's sensors to connect with nearby devices.
   - **Search & Now**: Configure your Google search settings and Google Now settings.
   - **Security**: Configure the Android Device Manager and apps security settings.
   - **Set up nearby device**: Set up another device using Wi-Fi and Bluetooth.
   - **Smart Lock for Passwords**: Configure your saved Google passwords and auto sign-in settings.

Note: These options may change if you are signed in to your Google Account.

DRAFT
FOR INTERNAL USE ONLY

Backup and Reset

Back up your data to Google servers. You can also reset your device to its factory defaults.

Backup and Restore

Enable backup of your information to your Samsung account or Google servers.

1. From a Home screen, tap **Apps** > **Settings**.
2. Tap **Backup and reset** for options:

Samsung account

- **Back up my data**: Enable back up of your messages and more through your Samsung account.
- **Restore**: Use your Samsung account to restore your backup data.

Google Account

- **Back up my data**: Enable back up of application data, Wi-Fi passwords, and other settings to Google servers.
- **Backup account**: Select a Google Account to be used as your backup account.
- **Automatic restore**: Enable automatic restoration of settings from Google servers. When enabled, backed-up settings are restored when you reinstall an application.

Auto Restart

Optimize your device by restarting it automatically at set times. The device only restarts if it is not in use and battery power is more than 30%.

Note: Any unsaved data is lost when the device restarts.

To enable Auto restart:

1. From a Home screen, tap **Apps** > **Settings**.
2. Tap **Backup and reset** > **Auto restart**.
3. Tap **On/Off** to activate Auto restart, and then set the following parameters:
   - **Time**: Set the time of day to restart your device.
   - **Days**: Select the day of the week to automatically restart your device.

Reset

Restore your device to its default settings.

Reset Settings

You can reset your device to its factory default settings, which resets everything except the security, language, and account settings. Personal data is not affected.

1. From a Home screen, tap **Apps** > **Settings**.
2. Tap **Backup and reset** > **Reset settings**.
3. Tap **Reset settings**, and confirm when prompted.

DRAFT
FOR INTERNAL USE ONLY

Reset Network Settings

You can reset Wi-Fi, Mobile data, and Bluetooth settings with Reset network settings.

1. From a Home screen, tap **Apps** > **Settings**.
2. Tap **Backup and reset** > **Reset network settings**.
3. Tap **Reset settings**, and confirm when prompted.

Factory Data Reset

You can reset your device to factory defaults, erasing all data from your device.

This action permanently erases ALL data from the device, including Google or other account settings, system and application data and settings, downloaded applications, as well as your music, photos, videos, and other files. Any data stored on an external SD card is not affected.

Note: When you sign in to a Google Account on your device, Factory Reset Protection is activated. This protects your device in the event it is lost or stolen. For more information, see Factory Reset Protection.

If you reset your device to factory default settings with the Factory Reset Protection (FRP) feature turned on, you must enter the user name and password for a registered Google Account to regain access to the device. You will not be able to access the device without the correct credentials.

Warning: If you reset your Google Account password, you must wait 72 hours after changing your password to perform a factory data reset on your device.

Before resetting your device:

1. Verify that the information you want to keep has transferred to your storage area.
2. Log in to your Google Account and confirm your user name and password.

To reset your device:

1. From a Home screen, tap **Apps** > **Settings**.
2. Tap **Backup and reset** > **Factory data reset**.
3. Tap **Reset device** and follow the prompts to perform the reset.
4. When the device restarts, follow the prompts to set up your device.

DRAFT
FOR INTERNAL USE ONLY

Language and Input

Configure your device's language and input settings.

Language

You can select a default language for your device's menus and keyboards.

1. From a Home screen, tap **Apps** > **Settings**.
2. Tap **Language and input** > **Language**.
3. Select a language from the list.

Default Keyboard

You can select a default keyboard for your device's menus and keyboards.

1. From a Home screen, tap **Apps** > **Settings**.
2. Tap **Language and input** > **Default keyboard**.
3. Select a keyboard.

Note: Additional keyboards can be downloaded from the Google Play store.

Samsung Keyboard

Configure options for using the Samsung keyboard.

1. From a Home screen, tap **Apps** > **Settings**.
2. Tap **Language and input** > **Samsung keyboard** for options:
   - **Languages and types**: Set the keyboard type and language.
     - **English(US)**: Set the keyboard type: Qwerty keyboard or 3x4 keyboard.
     - **Add input languages**: Choose which languages are available on the keyboard. To switch between languages, slide the Space bar sideways.
   - **Smart typing**: Use predictive text and correct common typing mistakes to improve input.
     - **Predictive text**: Predictive text suggests words that match your text entries, and can automatically complete common words. Predictive text can learn your personal writing style from your contacts, messages, Gmail, and social networking sites—improving its accuracy of predicting your text entries.
     - Additional keyboard settings provide assistance with capitalization, punctuation, and much more.
   - **Key-tap feedback**: Play a tone or see character previews while typing.
   - **Customization**: Use alternative characters, text shortcuts, change the keyboard size, or use a high contrast keyboard.
   - **Other settings**: Reset keyboard settings, clear personalized data, and view information about the Samsung keyboard.

DRAFT
FOR INTERNAL USE ONLY

Google Voice Typing

Speak rather than type your text entries using Google voice typing.

1. From a Home screen, tap **Apps** > **Settings**.
2. Tap **Language and input** > **Google voice typing** for options:
   - **Languages**: Select languages for Google voice typing.
   - **"Ok Google" detection**: Launch a Google search whenever you say "OK Google".
   - **Hands-free**: Allow requests with the device locked.
   - **Speech output**: Select options for spoken feedback.
   - **Offline speech recognition**: Download and install speech recognition engines, allowing you to use voice input while not connected to the network.
   - **Block offensive words**: Hide search results that contain offensive words.
   - **Bluetooth headset**: Use audio input from a Bluetooth headset (not included) if one is connected.

Text-To-Speech Options

Configure your Text-to-Speech (TTS) options. TTS is used for various accessibility features, such as Voice Assistant. For more information, see Accessibility.

1. From a Home screen, tap **Apps** > **Settings**.
2. Tap **Language and input** > **Text-to-speech** for options:
   - **Preferred TTS engine**: Choose either the Samsung or Google text-to-speech engine. Tap **Settings** next to each TTS engine for options.
   - **Speech rate**: Set the speed at which the text is spoken.
   - **Default language status**: Display the default language in use.

Pointer Speed

Configure pointer speed for an optional mouse or trackpad (not included).

1. From a Home screen, tap **Apps** > **Settings**.
2. Tap **Language and input**.
3. Under **Pointer speed**, drag the slider to the right to go faster or to the left to go slower.

DRAFT
FOR INTERNAL USE ONLY

Battery

View how battery power is used for device activities.

1. From a Home screen, tap **Apps** > **Settings**.
2. Tap **Battery** for options:
   - **Power saving mode**: Save battery power by limiting your device's performance, limiting vibration feedback, and restricting location services and most background data.
   - **Ultra power saving mode**: Save battery power by using a minimal Home screen layout and limiting the number of usable apps.
   - **Percentage on status bar**: Display the battery charge percentage next to the battery icon on the Status bar.
   - **Past and predicted usage**: View estimated usage time remaining based on your usage over the last 7 days.
   - **Recent battery usage**: Tap an item to view details of its battery usage.
3. Tap **More** for the following options:
   - **Refresh**: Update the listing.
   - **Optimize battery usage**: Choose apps to optimize their individual battery usage.

DRAFT
FOR INTERNAL USE ONLY

Storage

View the device memory and usage, or mount, unmount, or format an optional memory card (not included).

Device Memory

View and manage the memory used by the device.

1. From a Home screen, tap **Apps** > **Settings**.
2. Tap **Storage**.
3. Tap **Internal storage**, if an optional SD card is installed. Device storage used out of the total space available is displayed.

   The amounts of memory used are further divided into:

   - **Total space**: The total space in your device's memory.
   - **Available space**: The amount of storage space currently available.
   - **System memory**: The minimum amount of storage space required to run the system.
   - **Used space**: The amount of storage space currently being used.
   - **Other**: The space used by app data, downloaded files, and Android system files.
   - **Cached data**: The amount of data currently cached.
4. Tap **Explore** to launch My Files to view content stored on your device.

To increase available memory:

1. From a Home screen, tap **Apps** > **Settings**.
2. Tap **Storage**.
3. Tap **Internal storage**, if an optional SD card is installed.
4. Tap **Cached data** to clear cached data for all apps.
5. Tap **Delete** to confirm.

Memory Card (SD Card)

Once an optional memory card (not included) has been installed in your device, the card memory is displayed as part of Total space and Available space.

Note: The SD card menu only appears when an optional memory card is installed.

For more information, see Install an Optional Memory Card.

Mount a Memory Card

When you install an optional memory card, it is automatically mounted (connected to the device) and prepared for use. However, should you unmount the card without removing it from the device, you must mount it before it can be accessed.

1. From a Home screen, tap **Apps** > **Settings**.
2. Tap **Storage** > **SD card**.
3. Tap **Mount**.

DRAFT
FOR INTERNAL USE ONLY

Remove a Memory Card

Warning: To prevent damage to information stored on the memory card, unmount the card before removing it from the device.

1. From a Home screen, tap **Apps** > **Settings**.
2. Tap **Storage** > **SD card**.
3. Tap **Unmount**.
4. Insert the removal tool into the hole on the Memory card tray, and push until the tray pops out.
5. Remove the Memory card from the tray, and slide the tray back into the slot.

Format a Memory Card

Warning: When formatting an SD card, you should back up your music and photo files that are stored on the card because formatting the SD card deletes all of the stored data.

1. From a Home screen, tap **Apps** > **Settings**.
2. Tap **Storage** > **SD card**.
3. Tap **Format** and follow the prompts.

DRAFT
FOR INTERNAL USE ONLY

Accessories

Configure options when using a book cover (not included).

Flip the cover open to unlock the screen when secure lock is turned off.

1. From a Home screen, tap **Apps** > **Settings**.
2. Tap **Accessories** > **Automatic unlock** to enable this feature.

DRAFT
FOR INTERNAL USE ONLY

Date and Time

By default, your device receives date and time information from the wireless network.

When you are outside network coverage, you may want to set date and time information manually using the date and time settings.

1. From a Home screen, tap **Apps** > **Settings**.
2. Tap **Date and time**.

   The following options are available:

   - **Automatic date and time**: Receive date and time updates from the wireless network.
   - **Set date**: Enter the current date (only available when Automatic date and time is disabled).
   - **Set time**: Enter the current time (only available when Automatic date and time is disabled).
   - **Select time zone**: Choose your local time zone (only available when Automatic date and time is disabled).
   - **Use 24-hour format**: Set the format for displaying time.

DRAFT
FOR INTERNAL USE ONLY

Help

View tips and guidelines for using your device.

1. From a Home screen, tap **Apps** > **Settings**.
2. Tap **Help** for information about:
   - New features
   - Getting started
   - Applications
   - Settings

DRAFT
FOR INTERNAL USE ONLY

About Device

View information about your device, including current status, legal information, hardware and software versions, and more.

1. From a Home screen, tap **Apps** > **Settings**.
2. Tap **About device**, and then tap items for more details:
   - **Download updates manually**: Check for and install available software updates.
   - **Scheduled software updates**: Set a time to automatically check for and install available software updates.
   - **Status**: View the status of the battery, network, and other information about your device.
   - **Legal information**: View legal notices and other legal information, including your embedded Samsung legal information.
   - **Device name**: View and change your device's name.
   - Additional device information includes the Model number, Android version, Build number, and more.

DRAFT
FOR INTERNAL USE ONLY