GSM 850

Frequency: 836.5 MHz; Duty Cycle: 1:1; Room Ambient Temperature: 23.0°C; Liquid Temperature: 22.0°C
Medium parameters used (interpolated): f = 836.5 MHz; σ = 0.943 S/m; ε_r = 41.745; ρ = 1000 kg/m^3
DASY5 Configuration:
- Area Scan Setting: Find Secondary Maximum Within: 2.0 dB and with a peak SAR value greater than 0.012W/kg
- Electronics: DAE4 Sn1591; Calibrated: 2021-03-26
- Probe: EX3DV4 - SN7330; ConvF(10.8, 10.8, 10.8) @ 836.5 MHz; Calibrated: 2021-09-29
- Sensor-Surface: 1.4mm (Mechanical Surface Detection)
- Phantom: ELI V6.0 (20deg probe tilt) (Left); Type: QD OVA 003 AA; Serial: 2111

Volume Scan/GPRS 2 slots ch.190/Volume Scan (61x23x7): Measurement grid: dx=4mm, dy=4mm, dz=1.4mm

Reference Value = 24.13 V/m; Power Drift = -0.07 dB
Peak SAR (extrapolated) = 0.786 W/kg
SAR(1 g) = 0.500 W/kg; SAR(10 g) = 0.321 W/kg
Maximum value of SAR (measured) = 0.676 W/kg

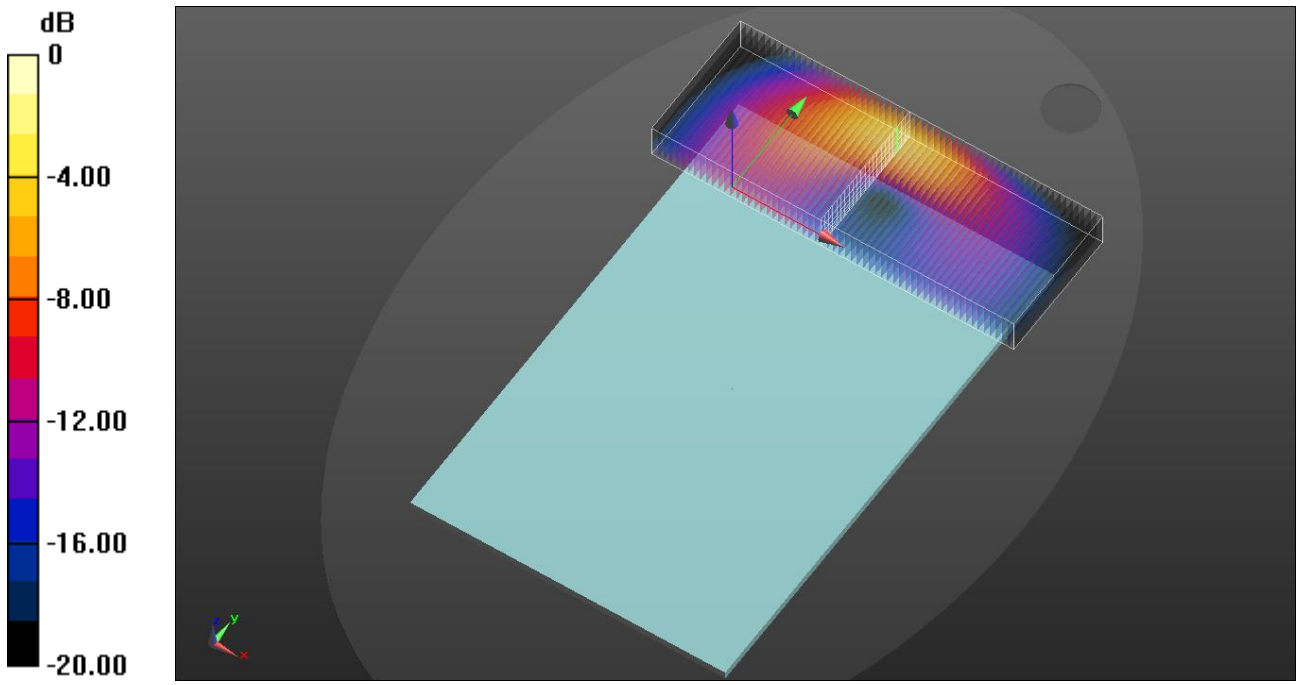

0 dB = 0.676 W/kg = −1.70 dBW/kg

Bluetooth Ant1

Frequency: 2441 MHz; Duty Cycle: 1:1.29033; Room Ambient Temperature: 23.0°C; Liquid Temperature: 22.0°C
Medium parameters used (interpolated): f = 2441 MHz; σ = 1.836 S/m; ε_r = 39.761; ρ = 1000 kg/m^3
DASY5 Configuration:
- Area Scan Setting: Find Secondary Maximum Within: 2.0 dB and with a peak SAR value greater than 0.012W/kg
- Electronics: DAE4 Sn1468; Calibrated: 2021-09-27
- Probe: EX3DV4 - SN7645; ConvF(8.26, 8.26, 8.26) @ 2441 MHz; Calibrated: 2021-04-15
- Sensor-Surface: 1.4mm (Mechanical Surface Detection)
- Phantom: ELI v6.0; Type: QDOVA003AA; Serial: TP:2005

Volume scan/GFSK ch.39/Volume Scan (61x23x7): Measurement grid: dx=4mm, dy=4mm, dz=1.4mm

Reference Value = 8.741 V/m; Power Drift = 0.10 dB
Peak SAR (extrapolated) = 0.658 W/kg
SAR(1 g) = 0.131 W/kg; SAR(10 g) = 0.058 W/kg
Maximum value of SAR (measured) = 0.231 W/kg

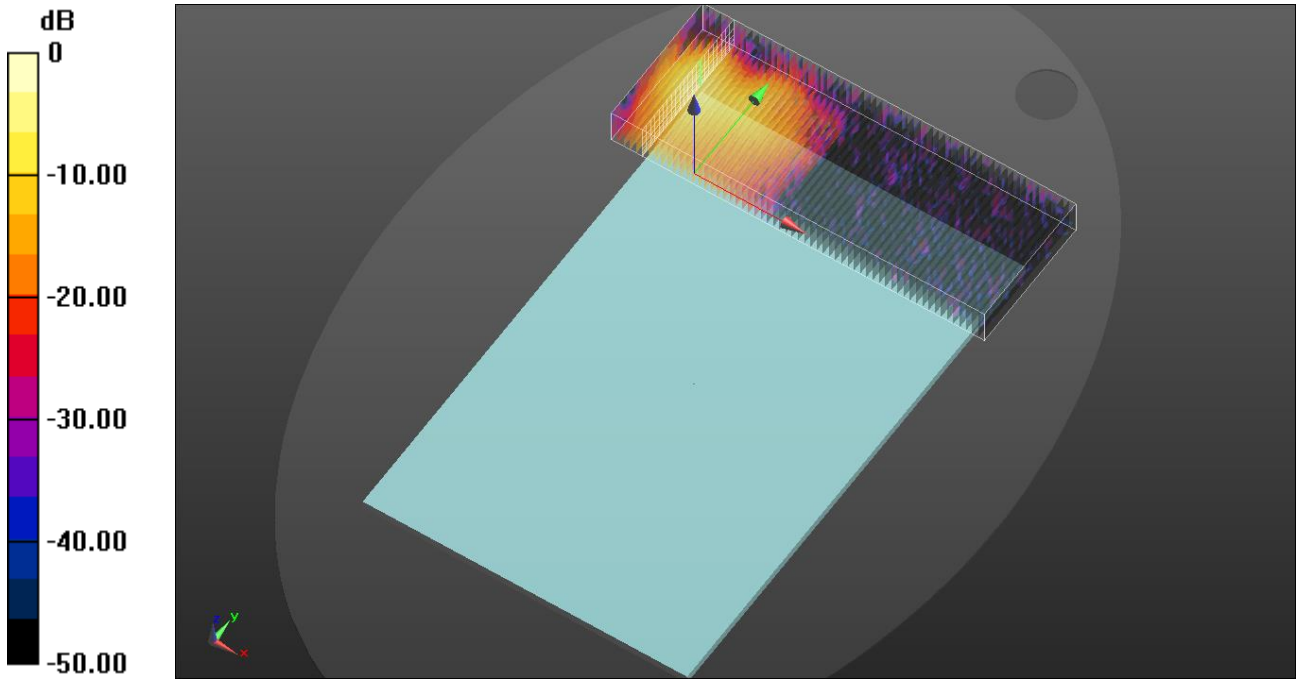

0 dB = 0.231 W/kg = −6.36 dBW/kg

UNII MIMO

Frequency: 5290 MHz; Duty Cycle: 1:1; Room Ambient Temperature: 23.0°C; Liquid Temperature: 22.0°C
Medium parameters used: f = 5290 MHz; σ = 4.708 S/m; ε_r = 35.208; ρ = 1000 kg/m^3
DASY5 Configuration:
- Area Scan Setting: Find Secondary Maximum Within: 2.0 dB and with a peak SAR value greater than 0.012W/kg
- Electronics: DAE4 Sn1468; Calibrated: 2021-09-27
- Probe: EX3DV4 - SN7645; ConvF(5.94, 5.94, 5.94) @ 5290 MHz; Calibrated: 2021-04-15
- Sensor-Surface: 1.4mm (Mechanical Surface Detection)
- Phantom: ELI v6.0; Type: QDOVA003AA; Serial: TP:2005

Volume scan/802.11 ac mode ch.58 MIMO/Volume Scan (61x23x7): Measurement grid: dx=4mm, dy=4mm, dz=1.4mm
Reference Value = 1.372 V/m; Power Drift = -0.04 dB
Peak SAR (extrapolated) = 4.45 W/kg
SAR(1 g) = 0.643 W/kg; SAR(10 g) = 0.137 W/kg
Maximum value of SAR (measured) = 2.47 W/kg

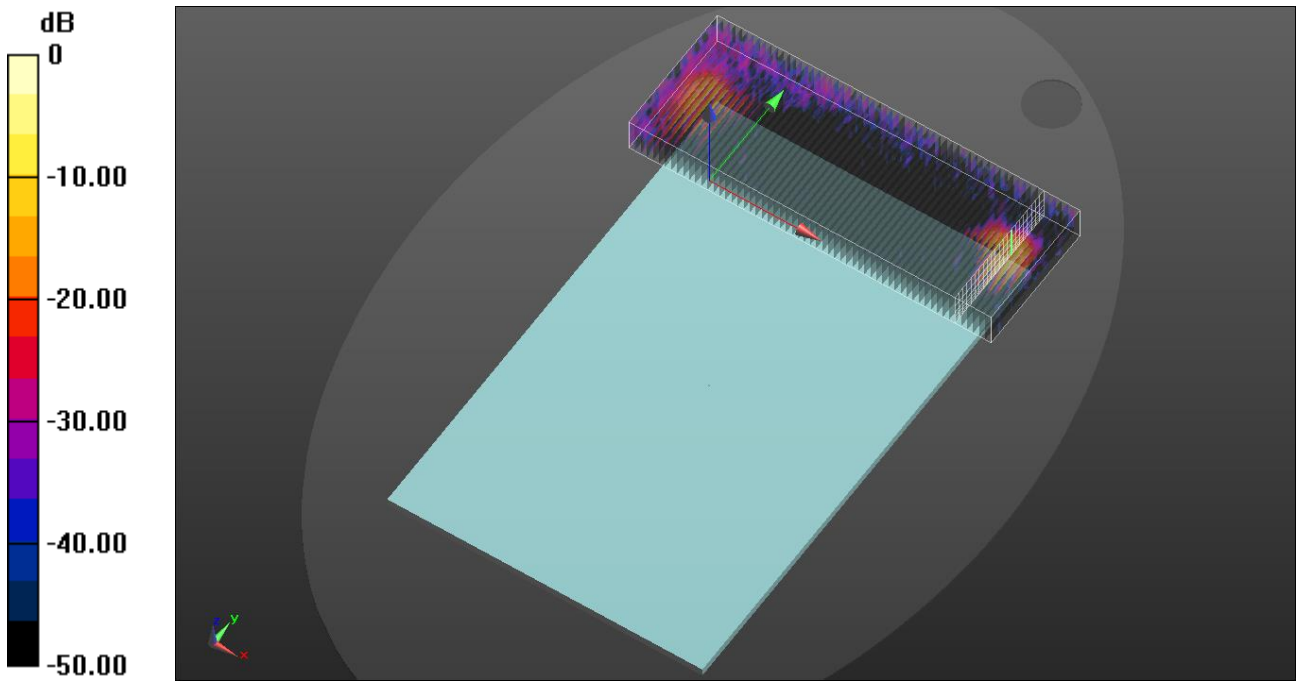

0 dB = 2.47 W/kg = 3.93 dBW/kg

Bluetooth Ant 2

Frequency: 2441 MHz; Duty Cycle: 1:1.29033; Room Ambient Temperature: 23.0°C; Liquid Temperature: 22.0°C
Medium parameters used (interpolated): f = 2441 MHz; σ = 1.836 S/m; ε_r = 39.761; ρ = 1000 kg/m^3
DASY5 Configuration:
- Area Scan Setting: Find Secondary Maximum Within: 2.0 dB and with a peak SAR value greater than 0.012W/kg
- Electronics: DAE4 Sn1468; Calibrated: 2021-09-27
- Probe: EX3DV4 - SN7645; ConvF(8.26, 8.26, 8.26) @ 2441 MHz; Calibrated: 2021-04-15
- Sensor-Surface: 1.4mm (Mechanical Surface Detection)
- Phantom: ELI v6.0; Type: QDOVA003AA; Serial: TP:2005

Volume scan/GFSK ch.39/Volume Scan (61x23x7): Measurement grid: dx=4mm, dy=4mm, dz=1.4mm

Reference Value = 13.02 V/m; Power Drift = -0.13 dB
Peak SAR (extrapolated) = 0.708 W/kg
SAR(1 g) = 0.292 W/kg; SAR(10 g) = 0.147 W/kg
Maximum value of SAR (measured) = 0.509 W/kg

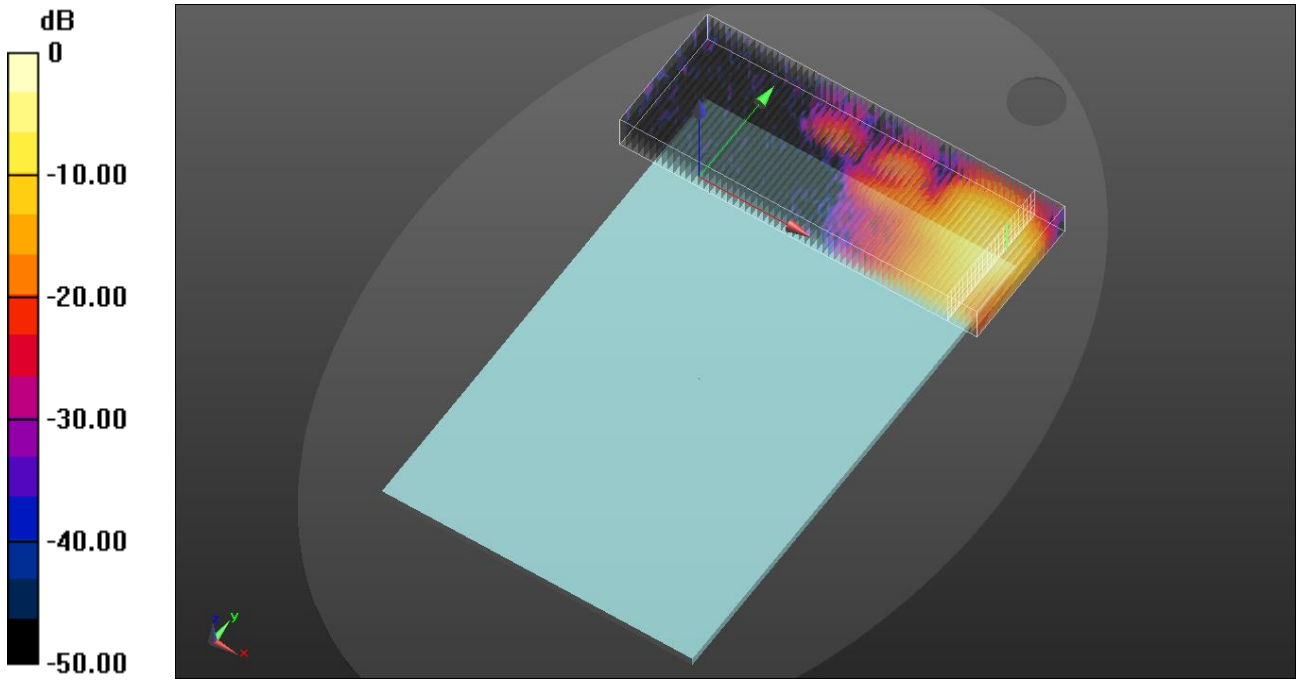

0 dB = 0.509 W/kg = −2.93 dBW/kg

DTS Ant 1

Frequency: 2437 MHz; Duty Cycle: 1:1; Room Ambient Temperature: 23.0°C; Liquid Temperature: 22.0°C
Medium parameters used (interpolated): f = 2437 MHz; σ = 1.788 S/m; ε_r = 38.425; ρ = 1000 kg/m^3
DASY5 Configuration:
- Area Scan Setting: Find Secondary Maximum Within: 2.0 dB and with a peak SAR value greater than 0.012W/kg
- Electronics: DAE4 Sn1343; Calibrated: 2021-08-23
- Probe: EX3DV4 - SN7314; ConvF(7.47, 7.47, 7.47) @ 2437 MHz; Calibrated: 2021-05-31
- Sensor-Surface: 1.4mm (Mechanical Surface Detection)
- Phantom: ELI V6.0 (20deg probe tilt); Type: QD OVA 003 AA; Serial: 2013

Volume scan/802.11b mode ch.6 SISO Ant1/Volume Scan (61x23x7): Measurement grid: dx=4mm, dy=4mm, dz=1.4mm

Reference Value = 9.984 V/m; Power Drift = 0.09 dB
Peak SAR (extrapolated) = 0.414 W/kg
SAR(1 g) = 0.168 W/kg; SAR(10 g) = 0.074 W/kg
Maximum value of SAR (measured) = 0.299 W/kg

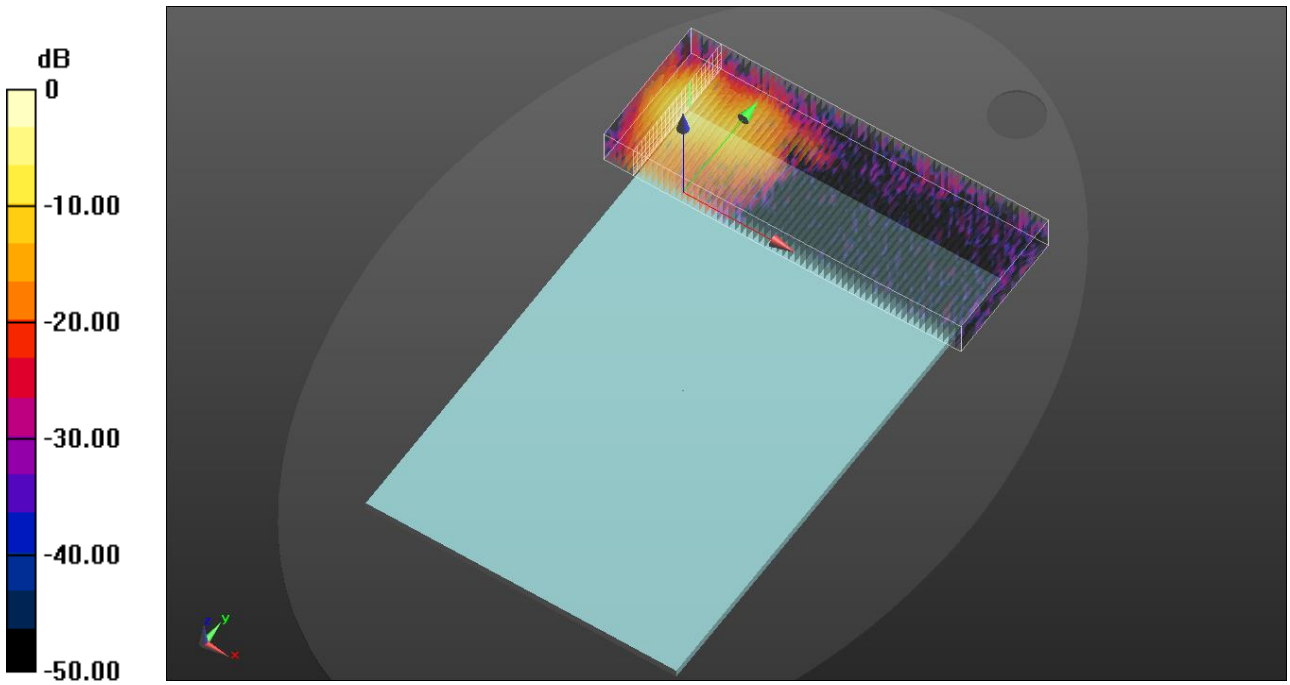

0 dB = 0.299 W/kg = −5.24 dBW/kg

DTS MIMO

Frequency: 2412 MHz; Duty Cycle: 1:1; Room Ambient Temperature: 23.0°C; Liquid Temperature: 22.0°C
Medium parameters used (interpolated): f = 2412 MHz; σ = 1.814 S/m; ε_r = 39.822; ρ = 1000 kg/m^3
DASY5 Configuration:
- Area Scan Setting: Find Secondary Maximum Within: 2.0 dB and with a peak SAR value greater than 0.012W/kg
- Electronics: DAE4 Sn1468; Calibrated: 2021-09-27
- Probe: EX3DV4 - SN7645; ConvF(8.26, 8.26, 8.26) @ 2412 MHz; Calibrated: 2021-04-15
- Sensor-Surface: 1.4mm (Mechanical Surface Detection)
- Phantom: ELI v6.0; Type: QDOVA003AA; Serial: TP:2005

Volume scan/802.11b mode ch.1 MIMO/Volume Scan (61x23x7): Measurement grid: dx=4mm, dy=4mm, dz=1.4mm

Reference Value = 11.64 V/m; Power Drift = -0.14 dB
Peak SAR (extrapolated) = 0.753 W/kg
SAR(1 g) = 0.231 W/kg; SAR(10 g) = 0.109 W/kg
Maximum value of SAR (measured) = 0.383 W/kg

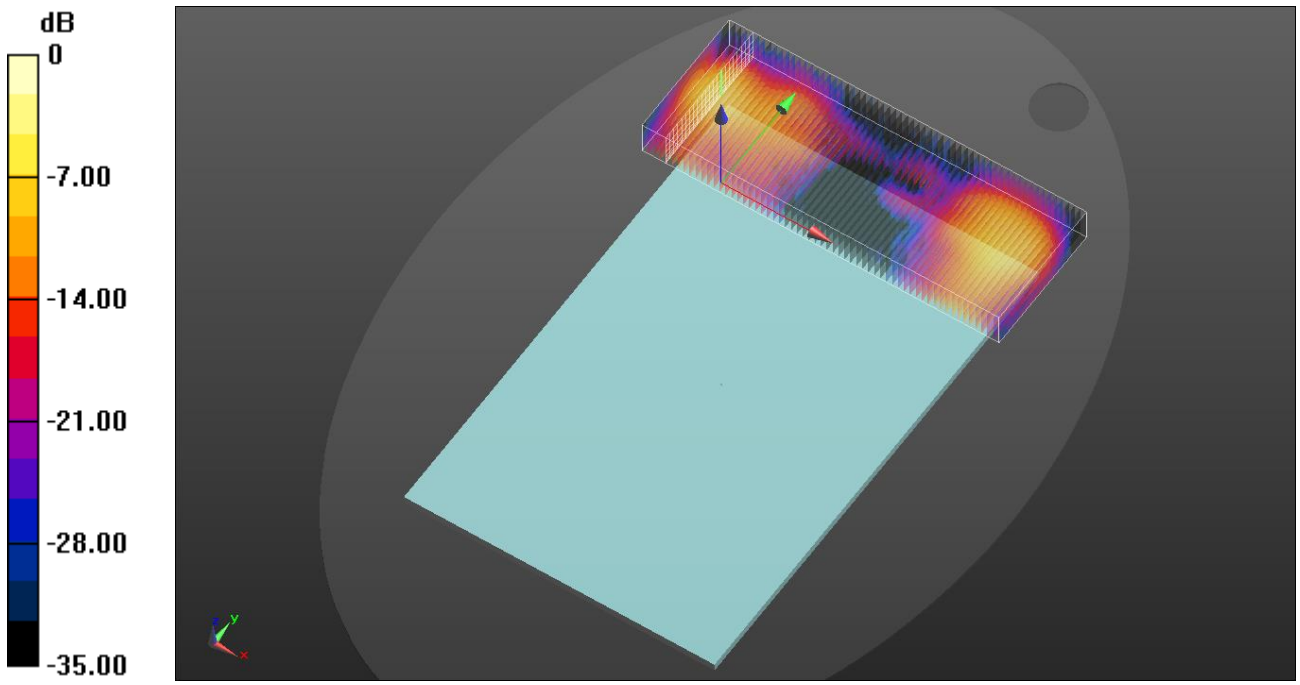

0 dB = 0.383 W/kg = −4.17 dBW/kg

DTS Ant 2

Frequency: 2412 MHz; Duty Cycle: 1:1; Room Ambient Temperature: 23.0°C; Liquid Temperature: 22.0°C
Medium parameters used (interpolated): f = 2412 MHz; σ = 1.814 S/m; ε_r = 39.822; ρ = 1000 kg/m^3
DASY5 Configuration:
- Area Scan Setting: Find Secondary Maximum Within: 2.0 dB and with a peak SAR value greater than 0.012W/kg
- Electronics: DAE4 Sn1468; Calibrated: 2021-09-27
- Probe: EX3DV4 - SN7645; ConvF(8.26, 8.26, 8.26) @ 2412 MHz; Calibrated: 2021-04-15
- Sensor-Surface: 1.4mm (Mechanical Surface Detection)
- Phantom: ELI v6.0; Type: QDOVA003AA; Serial: TP:2005

Volume scan/802.11b mode ch.1 SISO Ant2/Volume Scan (61x23x7): Measurement grid: dx=4mm, dy=4mm, dz=1.4mm

Reference Value = 10.59 V/m; Power Drift = 0.01 dB
Peak SAR (extrapolated) = 0.688 W/kg
SAR(1 g) = 0.218 W/kg; SAR(10 g) = 0.110 W/kg
Maximum value of SAR (measured) = 0.414 W/kg

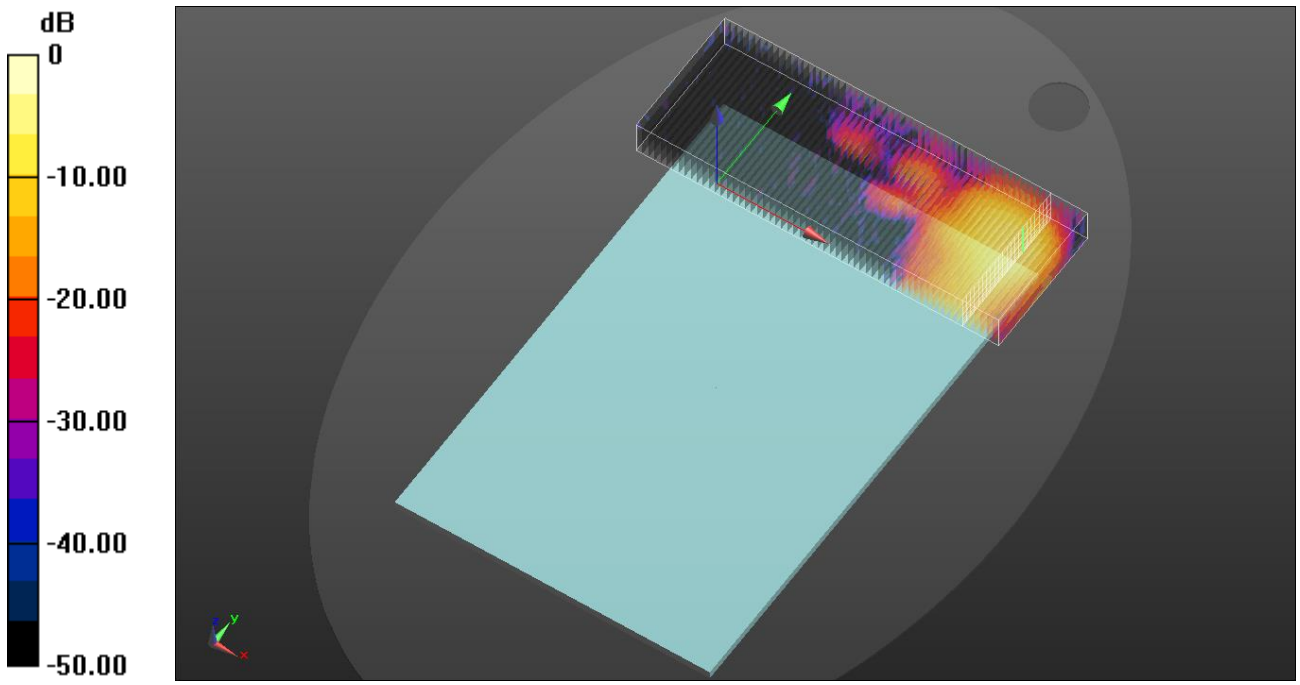

0 dB = 0.414 W/kg = −3.83 dBW/kg

UNII MIMO

Frequency: 5775 MHz; Duty Cycle: 1:1; Room Ambient Temperature: 23.0°C; Liquid Temperature: 22.0°C
Medium parameters used: f = 5775 MHz; σ = 5.35 S/m; ε_r = 35.013; ρ = 1000 kg/m^3
DASY5 Configuration:
- Area Scan Setting: Find Secondary Maximum Within: 2.0 dB and with a peak SAR value greater than 0.012W/kg
- Electronics: DAE4 Sn1343; Calibrated: 2021-08-23
- Probe: EX3DV4 - SN7314; ConvF(4.9, 4.9, 4.9) @ 5775 MHz; Calibrated: 2021-05-31
- Sensor-Surface: 1.4mm (Mechanical Surface Detection)
- Phantom: ELI V6.0 (20deg probe tilt); Type: QD OVA 003 AA; Serial: 2013

Volume scan/802.11ac mode ch.155 MIMO/Volume Scan (61x23x7): Measurement grid: dx=4mm, dy=4mm, dz=1.4mm
Reference Value = 8.768 V/m; Power Drift = 0.01 dB
Peak SAR (extrapolated) = 6.85 W/kg
SAR(1 g) = 0.438 W/kg; SAR(10 g) = 0.104 W/kg
Maximum value of SAR (measured) = 1.67 W/kg

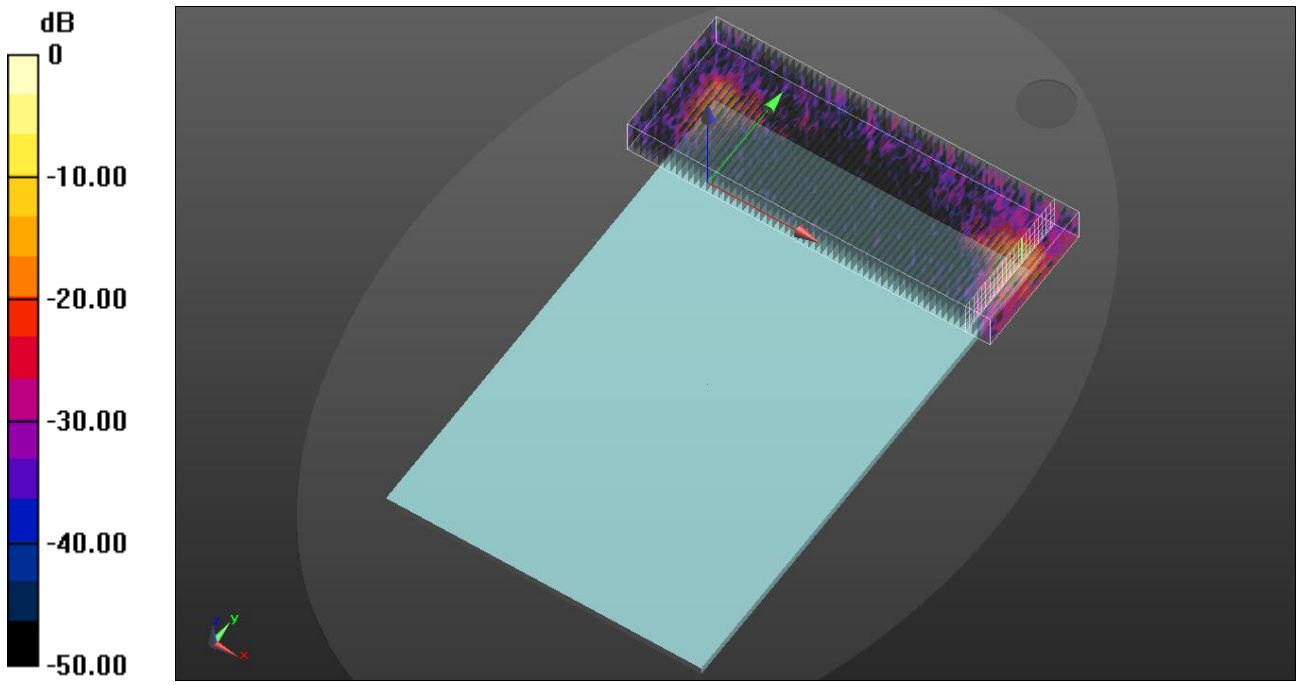

0 dB = 1.67 W/kg = 2.23 dBW/kg

GSM 1900

Frequency: 1880 MHz; Duty Cycle: 1:4.00037; Room Ambient Temperature: 23.0°C; Liquid Temperature: 22.0°C
Medium parameters used: f = 1880 MHz; σ = 1.439 S/m; ε_r = 41.131; ρ = 1000 kg/m^3
DASY5 Configuration:
- Area Scan Setting: Find Secondary Maximum Within: 2.0 dB and with a peak SAR value greater than 0.012W/kg
- Electronics: DAE4 Sn1468; Calibrated: 2021-09-27
- Probe: EX3DV4 - SN7645; ConvF(8.9, 8.9, 8.9) @ 1880 MHz; Calibrated: 2021-04-15
- Sensor-Surface: 1.4mm (Mechanical Surface Detection)
- Phantom: ELI v6.0; Type: QDOVA003AA; Serial: TP:2005

Volume scan/GPRS 2 slots ch.661/Volume Scan (61x23x7): Measurement grid: dx=4mm, dy=4mm, dz=1.4mm
Reference Value = 17.68 V/m; Power Drift = 0.06 dB
Peak SAR (extrapolated) = 0.887 W/kg
SAR(1 g) = 0.433 W/kg; SAR(10 g) = 0.242 W/kg
Maximum value of SAR (measured) = 0.673 W/kg

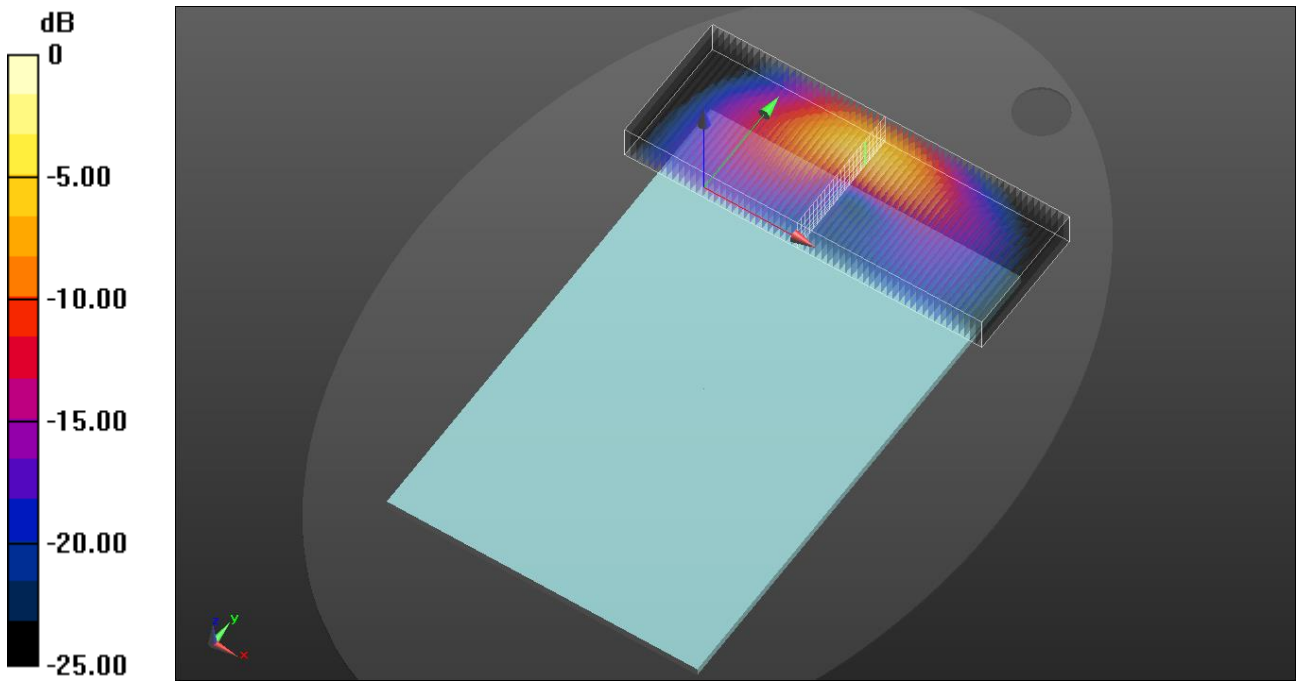

0 dB = 0.673 W/kg = −1.72 dBW/kg

WCDMA 2

Frequency: 1880 MHz; Duty Cycle: 1:1; Room Ambient Temperature: 23.0°C; Liquid Temperature: 22.0°C
Medium parameters used: f = 1880 MHz; σ = 1.439 S/m; ε_r = 41.131; ρ = 1000 kg/m^3
DASY5 Configuration:
- Area Scan Setting: Find Secondary Maximum Within: 2.0 dB and with a peak SAR value greater than 0.012W/kg
- Electronics: DAE4 Sn1468; Calibrated: 2021-09-27
- Probe: EX3DV4 - SN7645; ConvF(8.9, 8.9, 8.9) @ 1880 MHz; Calibrated: 2021-04-15
- Sensor-Surface: 1.4mm (Mechanical Surface Detection)
- Phantom: ELI v6.0; Type: QDOVA003AA; Serial: TP:2005

Volume scan/Rel.99 ch.9400/Volume Scan (61x23x7): Measurement grid: dx=4mm, dy=4mm, dz=1.4mm
Reference Value = 19.16 V/m; Power Drift = -0.02 dB
Peak SAR (extrapolated) = 1.47 W/kg
SAR(1 g) = 0.518 W/kg; SAR(10 g) = 0.221 W/kg
Maximum value of SAR (measured) = 0.947 W/kg

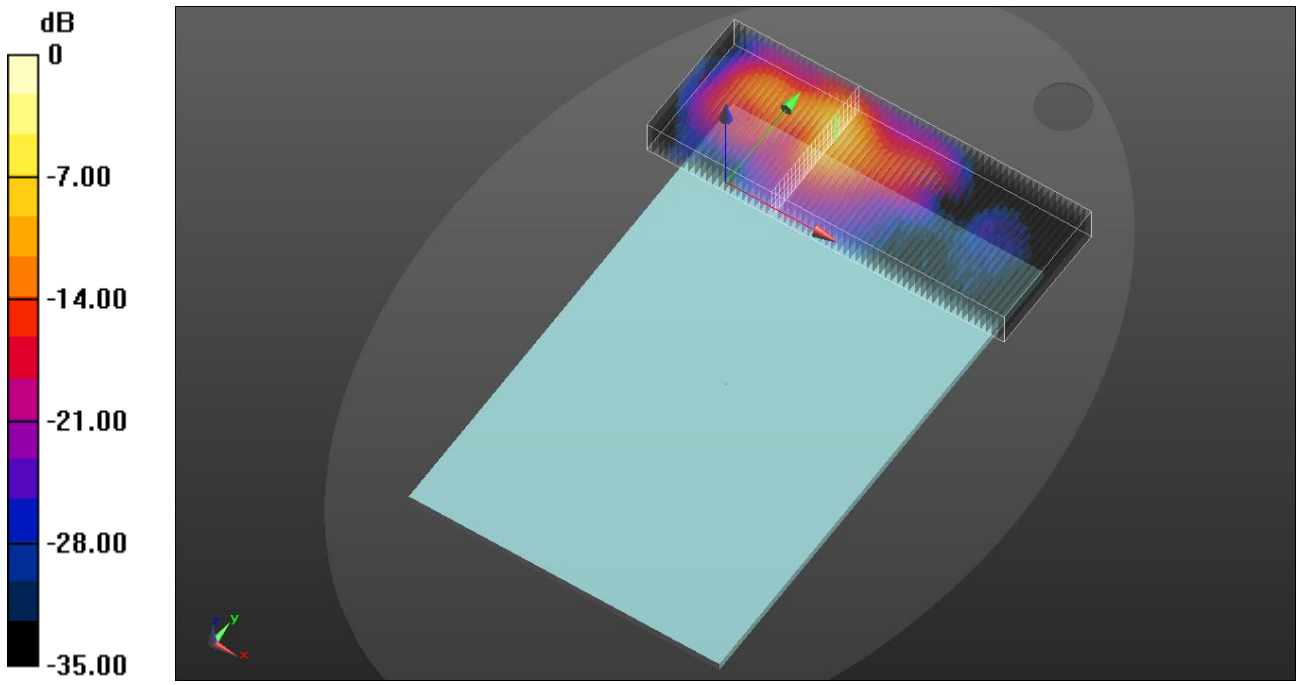

0 dB = 0.947 W/kg = −0.24 dBW/kg

WCDMA 4

Frequency: 1732.6 MHz; Duty Cycle: 1:1; Room Ambient Temperature: 23.0°C; Liquid Temperature: 22.0°C
Medium parameters used (interpolated): f = 1732.6 MHz; σ = 1.376 S/m; ε_r = 41.395; ρ = 1000 kg/m^3
DASY5 Configuration:
- Area Scan Setting: Find Secondary Maximum Within: 2.0 dB and with a peak SAR value greater than 0.012W/kg
- Electronics: DAE4 Sn1468; Calibrated: 2021-09-27
- Probe: EX3DV4 - SN7645; ConvF(9.3, 9.3, 9.3) @ 1732.6 MHz; Calibrated: 2021-04-15
- Sensor-Surface: 1.4mm (Mechanical Surface Detection)
- Phantom: ELI v6.0; Type: QDOVA003AA; Serial: TP:2005

Volume scan/Rel.99 ch.1413/Volume Scan (61x23x7): Measurement grid: dx=4mm, dy=4mm, dz=1.4mm
Reference Value = 19.49 V/m; Power Drift = 0.05 dB
Peak SAR (extrapolated) = 1.52 W/kg
SAR(1 g) = 0.513 W/kg; SAR(10 g) = 0.219 W/kg
Maximum value of SAR (measured) = 0.965 W/kg

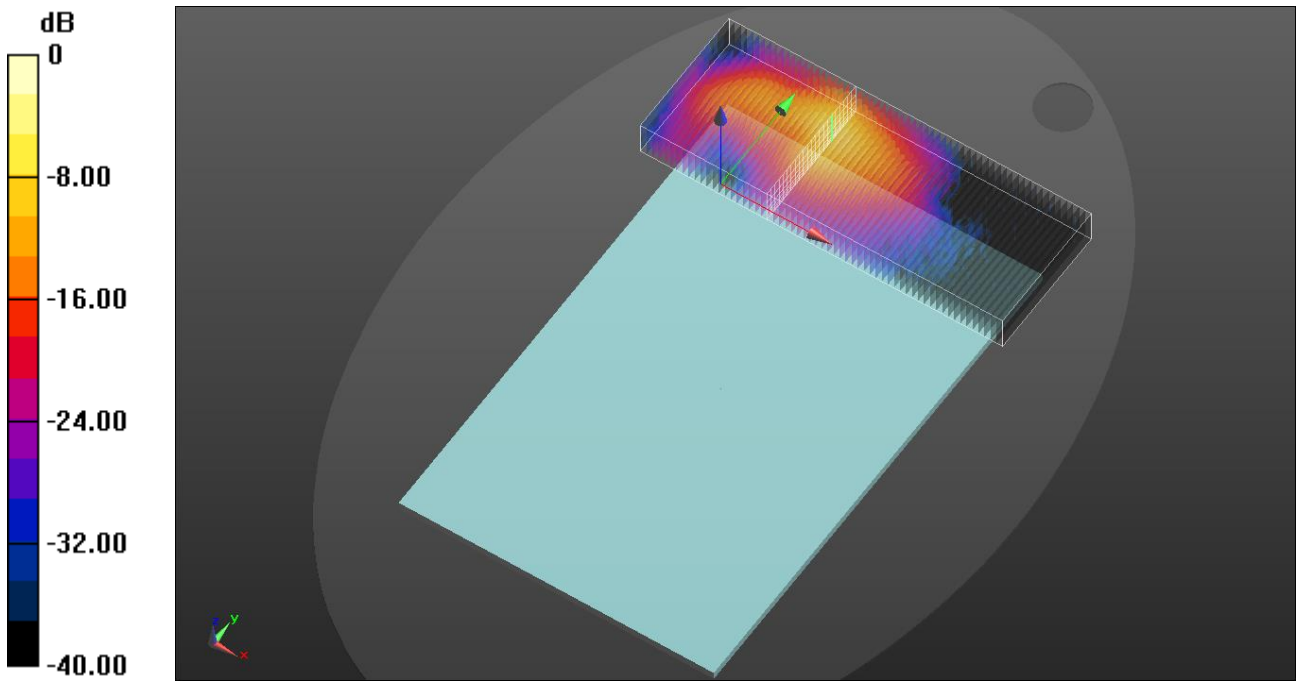

0 dB = 0.965 W/kg = −0.15 dBW/kg

W-CDMA Band V

Frequency: 836.6 MHz; Duty Cycle: 1:1; Room Ambient Temperature: 23.0°C; Liquid Temperature: 22.0°C
Medium parameters used (interpolated): f = 836.6 MHz; σ = 0.943 S/m; ε_r = 41.745; ρ = 1000 kg/m^3
DASY5 Configuration:
- Area Scan Setting: Find Secondary Maximum Within: 2.0 dB and with a peak SAR value greater than 0.012W/kg
- Electronics: DAE4 Sn1591; Calibrated: 2021-03-26
- Probe: EX3DV4 - SN7330; ConvF(10.8, 10.8, 10.8) @ 836.6 MHz; Calibrated: 2021-09-29
- Sensor-Surface: 1.4mm (Mechanical Surface Detection)
- Phantom: ELI V6.0 (20deg probe tilt) (Left); Type: QD OVA 003 AA; Serial: 2111

Volume Scan/Rel.99 ch.4183/Volume Scan (61x23x7): Measurement grid: dx=4mm, dy=4mm, dz=1.4mm
Reference Value = 26.64 V/m; Power Drift = 0.01 dB
Peak SAR (extrapolated) = 2.24 W/kg
SAR(1 g) = 0.713 W/kg; SAR(10 g) = 0.343 W/kg
Maximum value of SAR (measured) = 1.32 W/kg

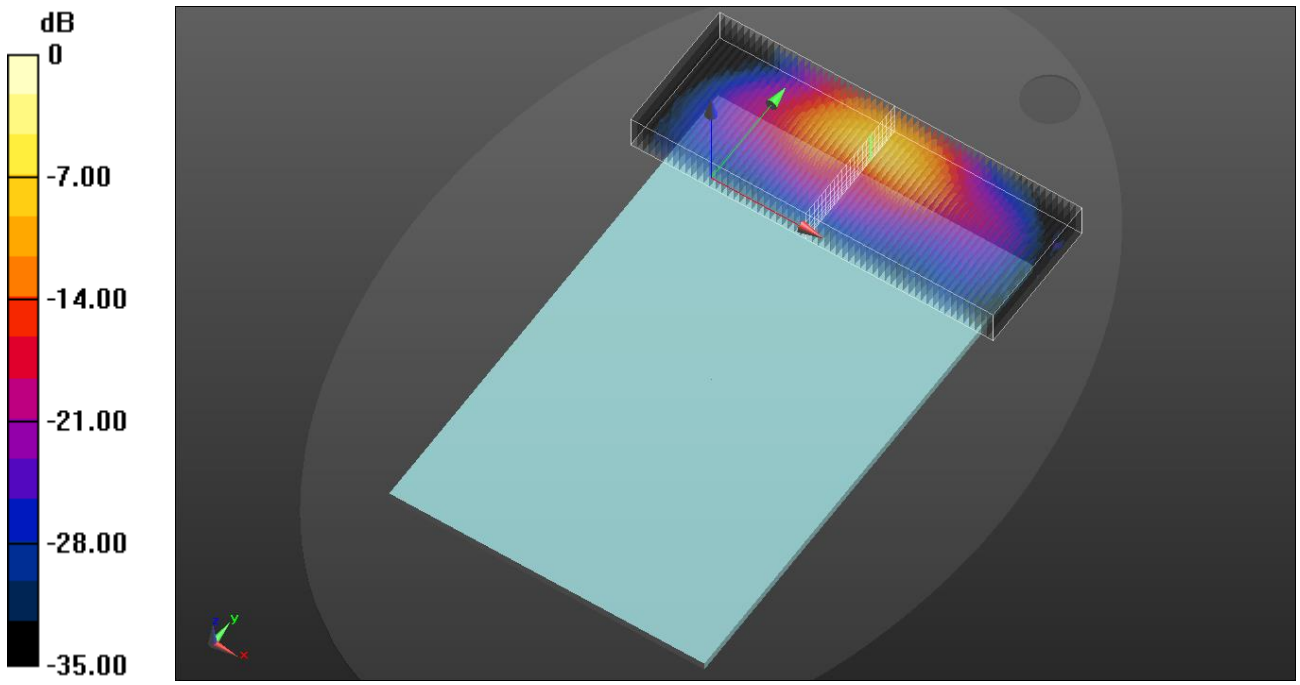

0 dB = 1.32 W/kg = 1.21 dBW/kg

LTE Band 12

Frequency: 707.5 MHz; Duty Cycle: 1:1; Room Ambient Temperature: 23.0°C; Liquid Temperature: 22.0°C
Medium parameters used (interpolated): f = 707.5 MHz; σ = 0.899 S/m; ε_r = 42.223; ρ = 1000 kg/m^3
DASY5 Configuration:
- Area Scan Setting: Find Secondary Maximum Within: 2.0 dB and with a peak SAR value greater than 0.012W/kg
- Electronics: DAE4 Sn1343; Calibrated: 2021-08-23
- Probe: EX3DV4 - SN7314; ConvF(9.6, 9.6, 9.6) @ 707.5 MHz; Calibrated: 2021-05-31
- Sensor-Surface: 1.4mm (Mechanical Surface Detection)
- Phantom: ELI V6.0 (20deg probe tilt); Type: QD OVA 003 AA; Serial: 2013

Volume scan/QPSK RB 25/12 ch.23095/Volume Scan (61x23x7): Measurement grid: dx=4mm, dy=4mm, dz=1.4mm

Reference Value = 24.81 V/m; Power Drift = -0.16 dB
Peak SAR (extrapolated) = 1.42 W/kg
SAR(1 g) = 0.494 W/kg; SAR(10 g) = 0.239 W/kg
Maximum value of SAR (measured) = 0.893 W/kg

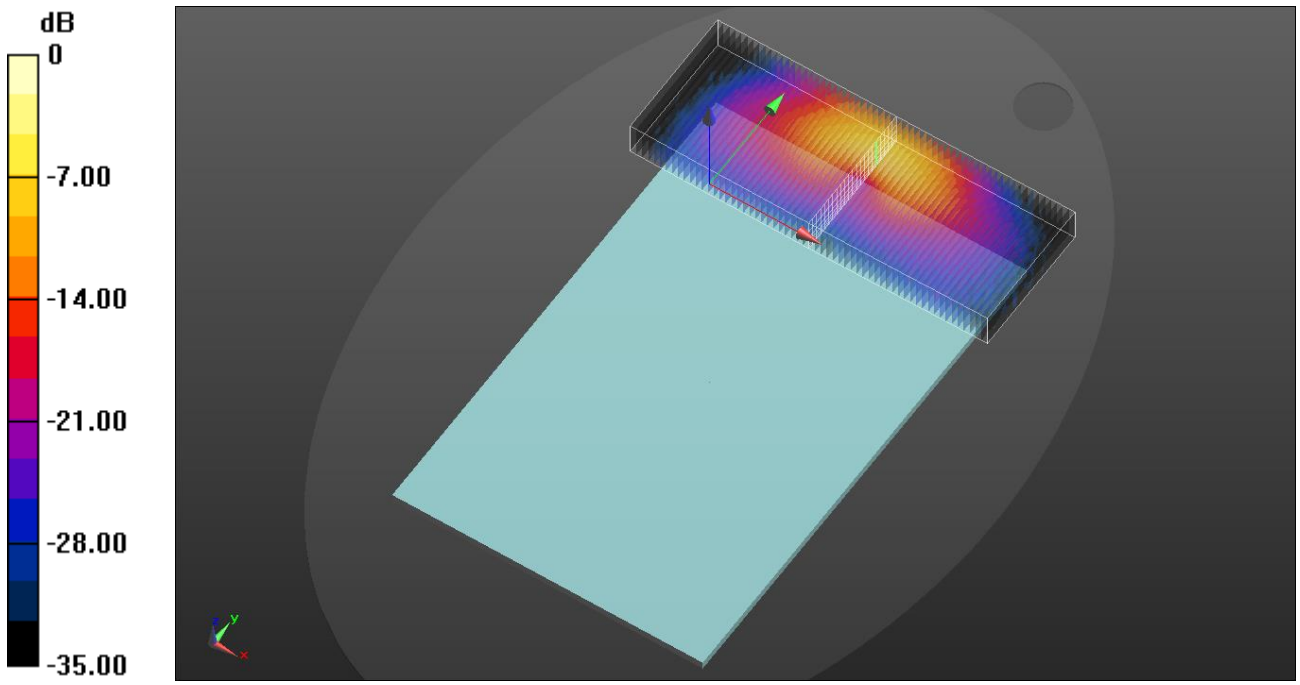

0 dB = 0.893 W/kg = −0.49 dBW/kg

LTE Band 13

Frequency: 831.5 MHz; Duty Cycle: 1:1; Room Ambient Temperature: 23.0°C; Liquid Temperature: 22.0°C
Medium parameters used (interpolated): f = 831.5 MHz; σ = 0.94 S/m; ε_r = 41.814; ρ = 1000 kg/m^3
DASY5 Configuration:
- Area Scan Setting: Find Secondary Maximum Within: 2.0 dB and with a peak SAR value greater than 0.012W/kg
- Electronics: DAE4 Sn1343; Calibrated: 2021-08-23
- Probe: EX3DV4 - SN7314; ConvF(9.43, 9.43, 9.43) @ 831.5 MHz; Calibrated: 2021-05-31
- Sensor-Surface: 1.4mm (Mechanical Surface Detection)
- Phantom: ELI V6.0 (20deg probe tilt); Type: QD OVA 003 AA; Serial: 2013

Volume scan/QPSK RB 1/25 ch.23230/Volume Scan (61x23x7): Measurement grid: dx=4mm, dy=4mm, dz=1.4mm

Reference Value = 23.98 V/m; Power Drift = -0.01 dB
Peak SAR (extrapolated) = 0.852 W/kg
SAR(1 g) = 0.524 W/kg; SAR(10 g) = 0.337 W/kg
Maximum value of SAR (measured) = 0.711 W/kg

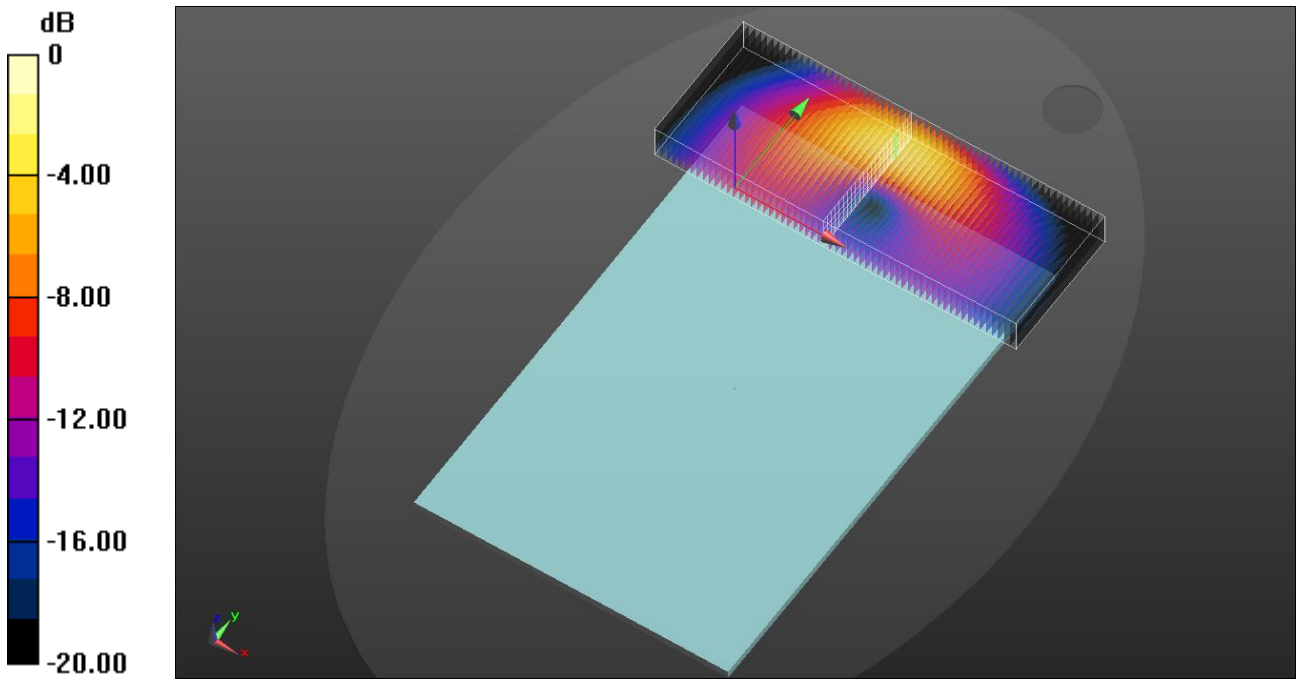

0 dB = 0.711 W/kg = −1.48 dBW/kg

LTE Band 25

Frequency: 1860 MHz; Duty Cycle: 1:1; Room Ambient Temperature: 23.0°C; Liquid Temperature: 22.0°C
Medium parameters used: f = 1860 MHz; σ = 1.43 S/m; ε_r = 41.141; ρ = 1000 kg/m^3
DASY5 Configuration:
- Area Scan Setting: Find Secondary Maximum Within: 2.0 dB and with a peak SAR value greater than 0.012W/kg
- Electronics: DAE4 Sn1468; Calibrated: 2021-09-27
- Probe: EX3DV4 - SN7645; ConvF(8.9, 8.9, 8.9) @ 1860 MHz; Calibrated: 2021-04-15
- Sensor-Surface: 1.4mm (Mechanical Surface Detection)
- Phantom: ELI v6.0; Type: QDOVA003AA; Serial: TP:2005

Volume scan/QPSK RB 50/24 ch.21640/Volume Scan (61x23x7): Measurement grid: dx=4mm, dy=4mm, dz=1.4mm

Reference Value = 17.38 V/m; Power Drift = -0.12 dB
Peak SAR (extrapolated) = 2.40 W/kg
SAR(1 g) = 0.783 W/kg; SAR(10 g) = 0.321 W/kg
Maximum value of SAR (measured) = 1.49 W/kg

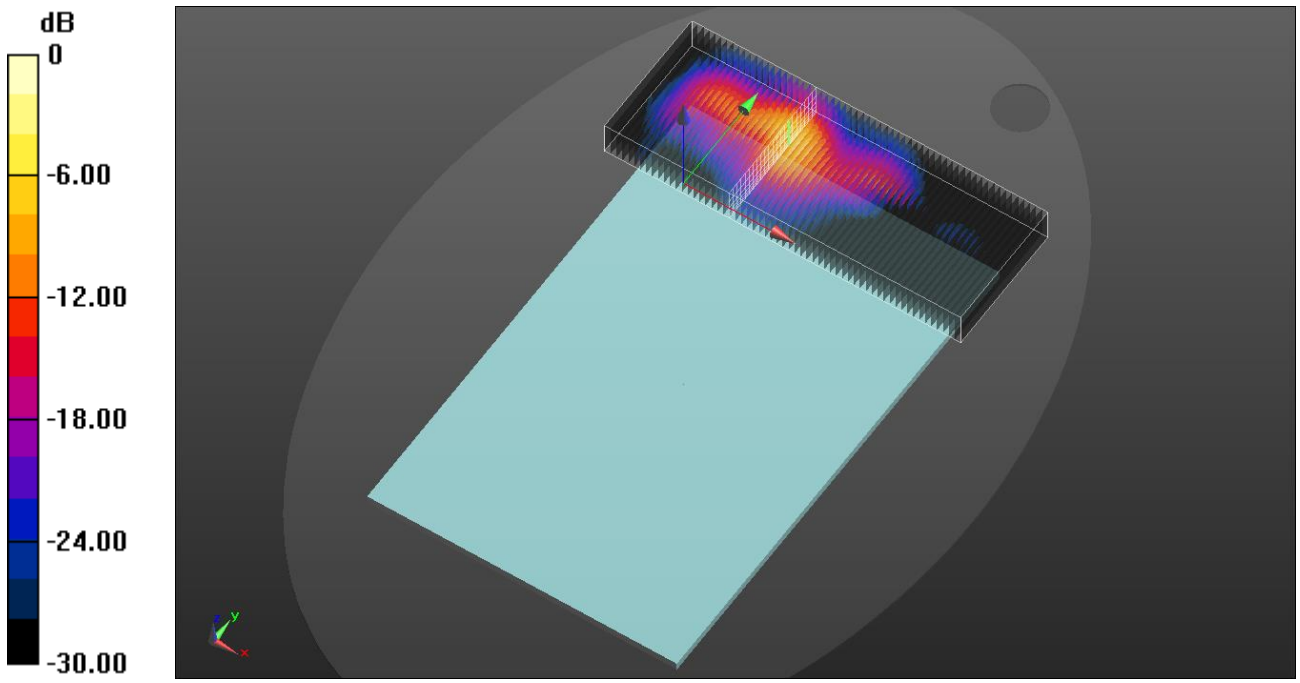

0 dB = 1.49 W/kg = 1.73 dBW/kg

LTE Band 26

Frequency: 831.5 MHz; Duty Cycle: 1:1; Room Ambient Temperature: 23.0°C; Liquid Temperature: 22.0°C
Medium parameters used (interpolated): f = 831.5 MHz; σ = 0.94 S/m; ε_r = 41.814; ρ = 1000 kg/m^3
DASY5 Configuration:
- Area Scan Setting: Find Secondary Maximum Within: 2.0 dB and with a peak SAR value greater than 0.012W/kg
- Electronics: DAE4 Sn1343; Calibrated: 2021-08-23
- Probe: EX3DV4 - SN7314; ConvF(9.43, 9.43, 9.43) @ 831.5 MHz; Calibrated: 2021-05-31
- Sensor-Surface: 1.4mm (Mechanical Surface Detection)
- Phantom: ELI V6.0 (20deg probe tilt); Type: QD OVA 003 AA; Serial: 2013

Volume scan/QPSK RB 1/37 ch.26865/Volume Scan (61x23x7): Measurement grid: dx=4mm, dy=4mm, dz=1.4mm

Reference Value = 28.22 V/m; Power Drift = 0.02 dB
Peak SAR (extrapolated) = 1.66 W/kg
SAR(1 g) = 0.691 W/kg; SAR(10 g) = 0.354 W/kg
Maximum value of SAR (measured) = 1.17 W/kg

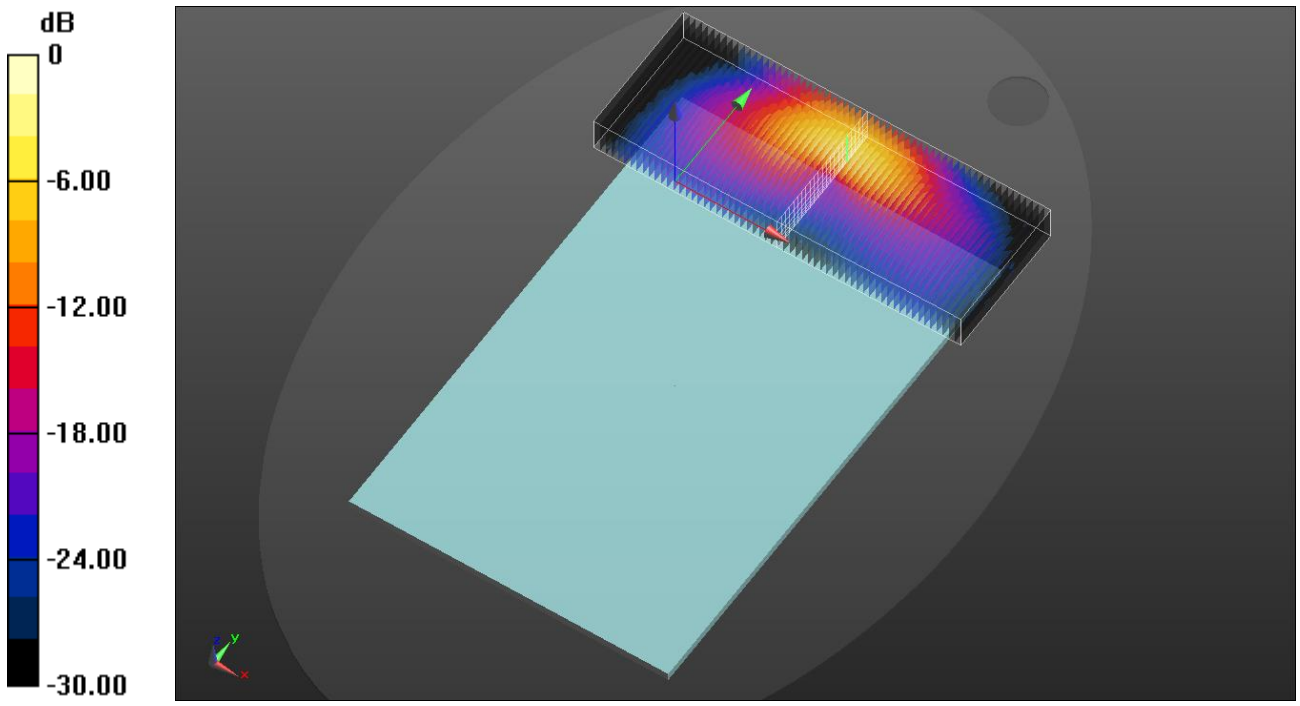

0 dB = 1.17 W/kg = 0.68 dBW/kg

LTE Band 41

Frequency: 2593 MHz; Duty Cycle: 1:1.59956; Room Ambient Temperature: 23.0°C; Liquid Temperature: 22.0°C
Medium parameters used (interpolated): f = 2593 MHz; σ = 1.911 S/m; ε_r = 38.257; ρ = 1000 kg/m^3
DASY5 Configuration:
- Area Scan Setting: Find Secondary Maximum Within: 2.0 dB and with a peak SAR value greater than 0.012W/kg
- Electronics: DAE4 Sn1343; Calibrated: 2021-08-23
- Probe: EX3DV4 - SN7314; ConvF(7.3, 7.3, 7.3) @ 2593 MHz; Calibrated: 2021-05-31
- Sensor-Surface: 1.4mm (Mechanical Surface Detection)
- Phantom: ELI V6.0 (20deg probe tilt); Type: QD OVA 003 AA; Serial: 2013

Volume scan/QPSK RB 1/49 ch.40620/Volume Scan (61x23x7): Measurement grid: dx=4mm, dy=4mm, dz=1.4mm

Reference Value = 21.16 V/m; Power Drift = -0.12 dB
Peak SAR (extrapolated) = 2.54 W/kg
SAR(1 g) = 0.770 W/kg; SAR(10 g) = 0.279 W/kg
Maximum value of SAR (measured) = 1.62 W/kg

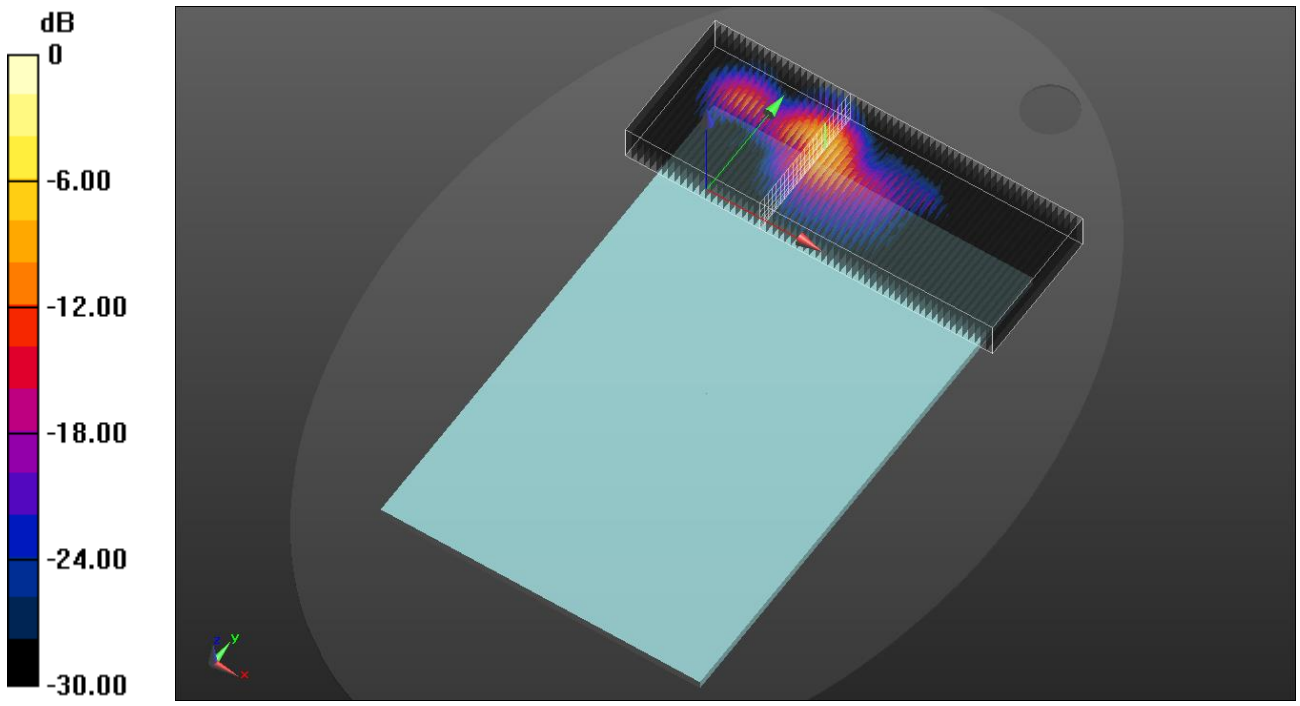

0 dB = 1.62 W/kg = 2.10 dBW/kg

LTE Band 66

Frequency: 1745 MHz; Duty Cycle: 1:1; Room Ambient Temperature: 23.0°C; Liquid Temperature: 22.0°C
Medium parameters used: f = 1745 MHz; σ = 1.383 S/m; ε_r = 41.342; ρ = 1000 kg/m^3
DASY5 Configuration:
- Area Scan Setting: Find Secondary Maximum Within: 2.0 dB and with a peak SAR value greater than 0.012W/kg
- Electronics: DAE4 Sn1468; Calibrated: 2021-09-27
- Probe: EX3DV4 - SN7645; ConvF(9.3, 9.3, 9.3) @ 1745 MHz; Calibrated: 2021-04-15
- Sensor-Surface: 1.4mm (Mechanical Surface Detection)
- Phantom: ELI v6.0; Type: QDOVA003AA; Serial: TP:2005

Volume scan/QPSK RB 50/24 ch.132322/Volume Scan (61x23x7): Measurement grid: dx=4mm, dy=4mm, dz=1.4mm

Reference Value = 23.68 V/m; Power Drift = -0.04 dB
Peak SAR (extrapolated) = 2.33 W/kg
SAR(1 g) = 0.732 W/kg; SAR(10 g) = 0.304 W/kg
Maximum value of SAR (measured) = 1.47 W/kg

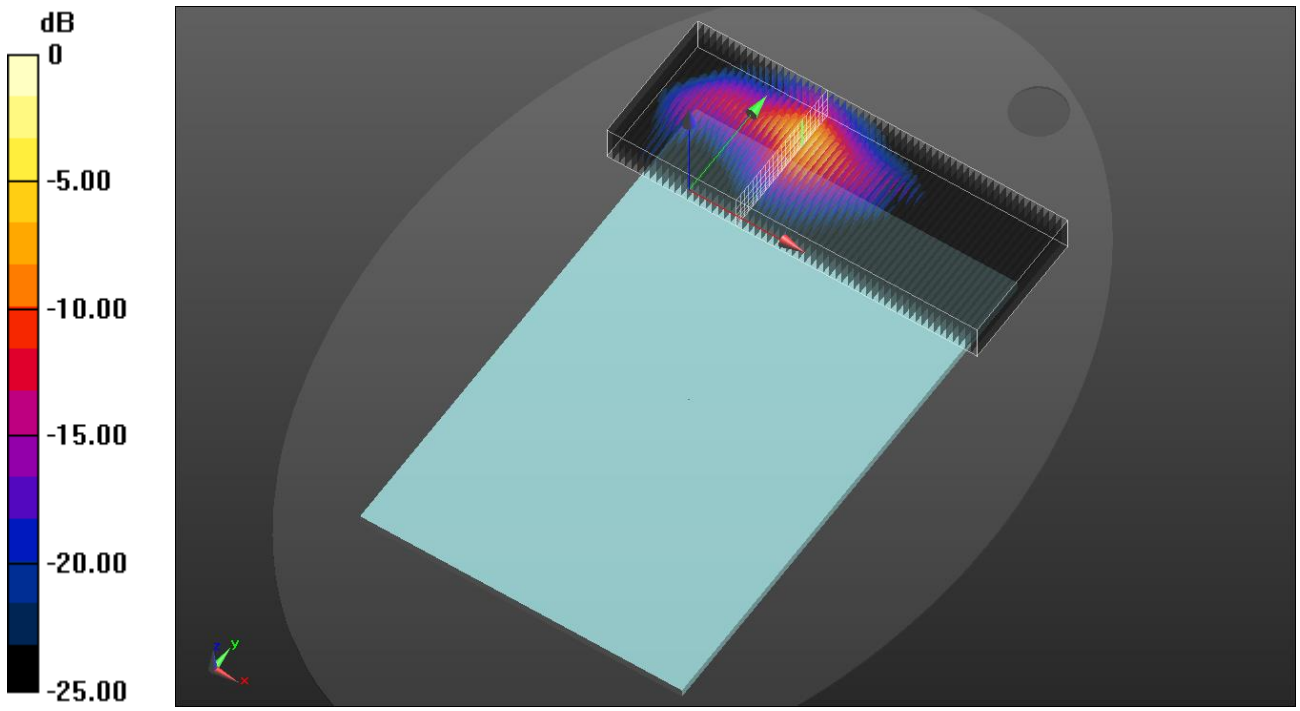

0 dB = 1.47 W/kg = 1.67 dBW/kg

NR Band n5

Frequency: 836.5 MHz; Duty Cycle: 1:1; Room Ambient Temperature: 23.0°C; Liquid Temperature: 22.0°C
Medium parameters used (interpolated): f = 836.5 MHz; σ = 0.943 S/m; ε_r = 41.745; ρ = 1000 kg/m^3
DASY5 Configuration:
- Area Scan Setting: Find Secondary Maximum Within: 2.0 dB and with a peak SAR value greater than 0.012W/kg
- Electronics: DAE4 Sn1591; Calibrated: 2021-03-26
- Probe: EX3DV4 - SN7330; ConvF(10.8, 10.8, 10.8) @ 836.5 MHz; Calibrated: 2021-09-29
- Sensor-Surface: 1.4mm (Mechanical Surface Detection)
- Phantom: ELI V6.0 (20deg probe tilt) (Left); Type: QD OVA 003 AA; Serial: 2111

Volume scan/QPSK RB 1/53 ch.167300/Volume Scan (61x23x7): Measurement grid: dx=4mm, dy=4mm, dz=1.4mm
Reference Value = 27.56 V/m; Power Drift = -0.06 dB
Peak SAR (extrapolated) = 2.11 W/kg
SAR(1 g) = 0.744 W/kg; SAR(10 g) = 0.363 W/kg
Maximum value of SAR (measured) = 1.27 W/kg

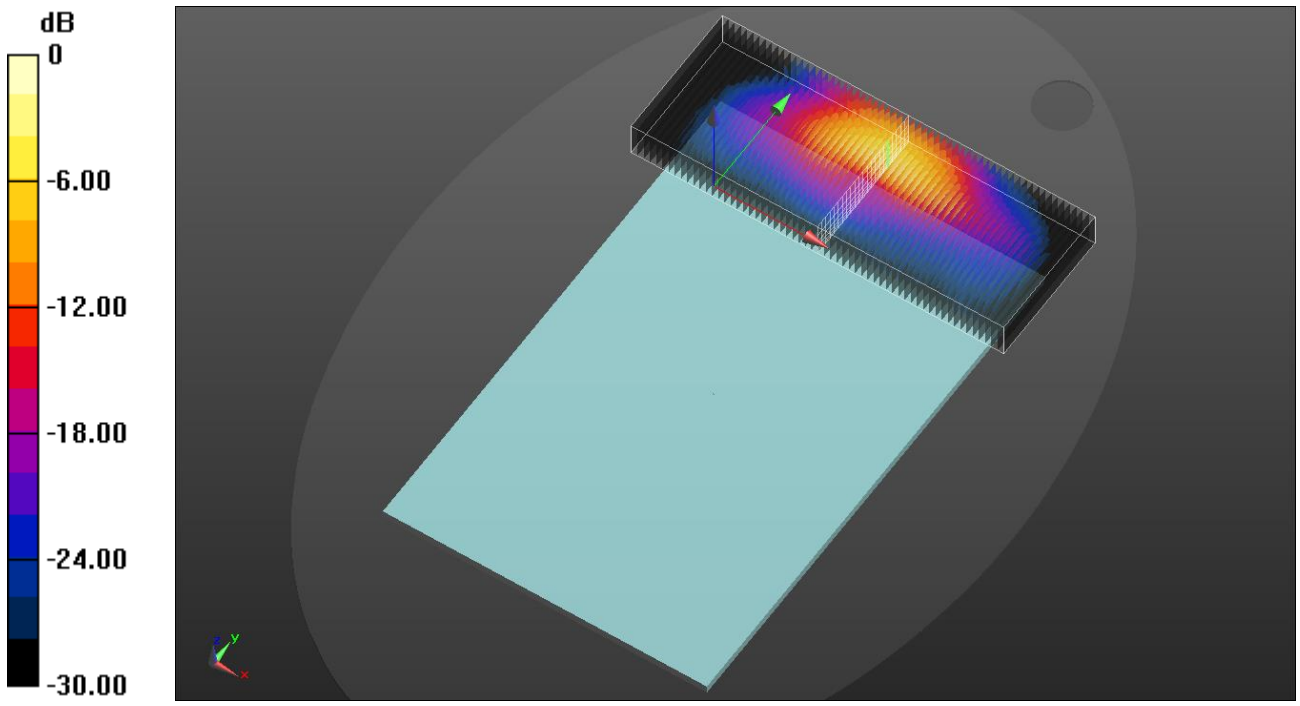

0 dB = 1.27 W/kg = 1.04 dBW/kg

NR Band n66

Frequency: 1745 MHz; Duty Cycle: 1:1; Room Ambient Temperature: 23.0°C; Liquid Temperature: 22.0°C
Medium parameters used: f = 1745 MHz; σ = 1.383 S/m; ε_r = 41.342; ρ = 1000 kg/m^3
DASY5 Configuration:
- Area Scan Setting: Find Secondary Maximum Within: 2.0 dB and with a peak SAR value greater than 0.012W/kg
- Electronics: DAE4 Sn1468; Calibrated: 2021-09-27
- Probe: EX3DV4 - SN7645; ConvF(9.3, 9.3, 9.3) @ 1745 MHz; Calibrated: 2021-04-15
- Sensor-Surface: 1.4mm (Mechanical Surface Detection)
- Phantom: ELI v6.0; Type: QDOVA003AA; Serial: TP:2005

Volume scan/QPSK RB 1/1 ch.349000/Volume Scan (61x23x7): Measurement grid: dx=4mm, dy=4mm, dz=1.4mm
Reference Value = 21.90 V/m; Power Drift = -0.04 dB
Peak SAR (extrapolated) = 1.86 W/kg
SAR(1 g) = 0.619 W/kg; SAR(10 g) = 0.261 W/kg
Maximum value of SAR (measured) = 1.23 W/kg

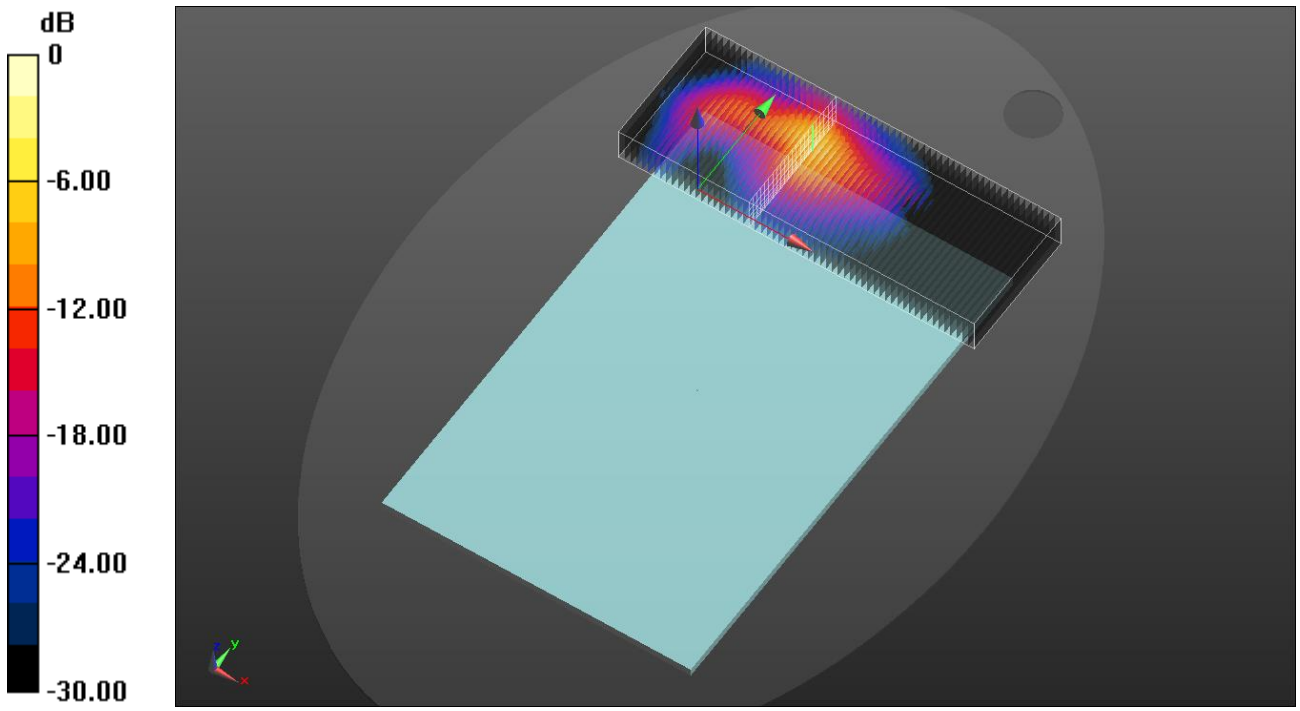

0 dB = 1.23 W/kg = 0.90 dBW/kg

LTE Band 2

Frequency: 1860 MHz; Duty Cycle: 1:1; Room Ambient Temperature: 23.0°C; Liquid Temperature: 22.0°C
Medium parameters used: f = 1860 MHz; σ = 1.401 S/m; ε_r = 39.247; ρ = 1000 kg/m^3
DASY5 Configuration:
- Area Scan Setting: Find Secondary Maximum Within: 2.0 dB and with a peak SAR value greater than 0.012W/kg
- Electronics: DAE4 Sn1468; Calibrated: 9/27/2021
- Probe: EX3DV4 - SN7645; ConvF(8.9, 8.9, 8.9) @ 1860 MHz; Calibrated: 4/15/2021
- Sensor-Surface: 1.4mm (Mechanical Surface Detection)
- Phantom: ELI v6.0; Type: QDOVA003AA; Serial: TP:2005

Volume scan/QPSK RB 50/24 ch.18700/Volume Scan (17x25x7): Measurement grid: dx=5mm, dy=5mm, dz=5mm
Reference Value = 7.105 V/m; Power Drift = 0.01 dB
Peak SAR (extrapolated) = 0.929 W/kg
SAR(1 g) = 0.350 W/kg; SAR(10 g) = 0.134 W/kg
Maximum value of SAR (measured) = 0.680 W/kg

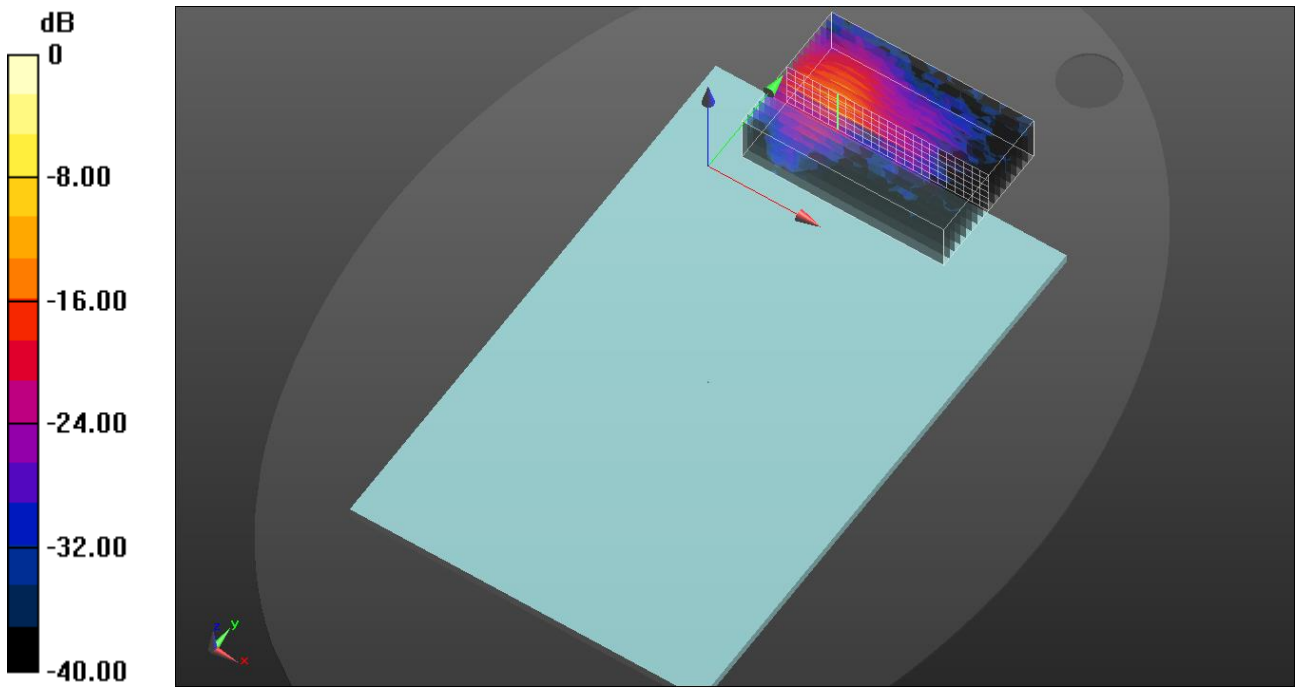

0 dB = 0.680 W/kg = −1.67 dBW/kg

NR Band n5

Frequency: 836.5 MHz; Duty Cycle: 1:1; Room Ambient Temperature: 23.0°C; Liquid Temperature: 22.0°C
Medium parameters used (interpolated): f = 836.5 MHz; σ = 0.896 S/m; ε_r = 41.343; ρ = 1000 kg/m^3
DASY5 Configuration:
- Area Scan Setting: Find Secondary Maximum Within: 2.0 dB and with a peak SAR value greater than 0.012W/kg
- Electronics: DAE4 Sn1468; Calibrated: 9/27/2021
- Probe: EX3DV4 - SN7645; ConvF(10.56, 10.56, 10.56) @ 836.5 MHz; Calibrated: 4/15/2021
- Sensor-Surface: 1.4mm (Mechanical Surface Detection)
- Phantom: ELI v6.0; Type: QDOVA003AA; Serial: TP:2005

Volume scan/QPSK RB 1/53 ch.167300/Volume Scan (17x25x7): Measurement grid: dx=5mm, dy=5mm, dz=5mm
Reference Value = 16.86 V/m; Power Drift = -0.02 dB
Peak SAR (extrapolated) = 0.661 W/kg
SAR(1 g) = 0.287 W/kg; SAR(10 g) = 0.144 W/kg
Maximum value of SAR (measured) = 0.466 W/kg

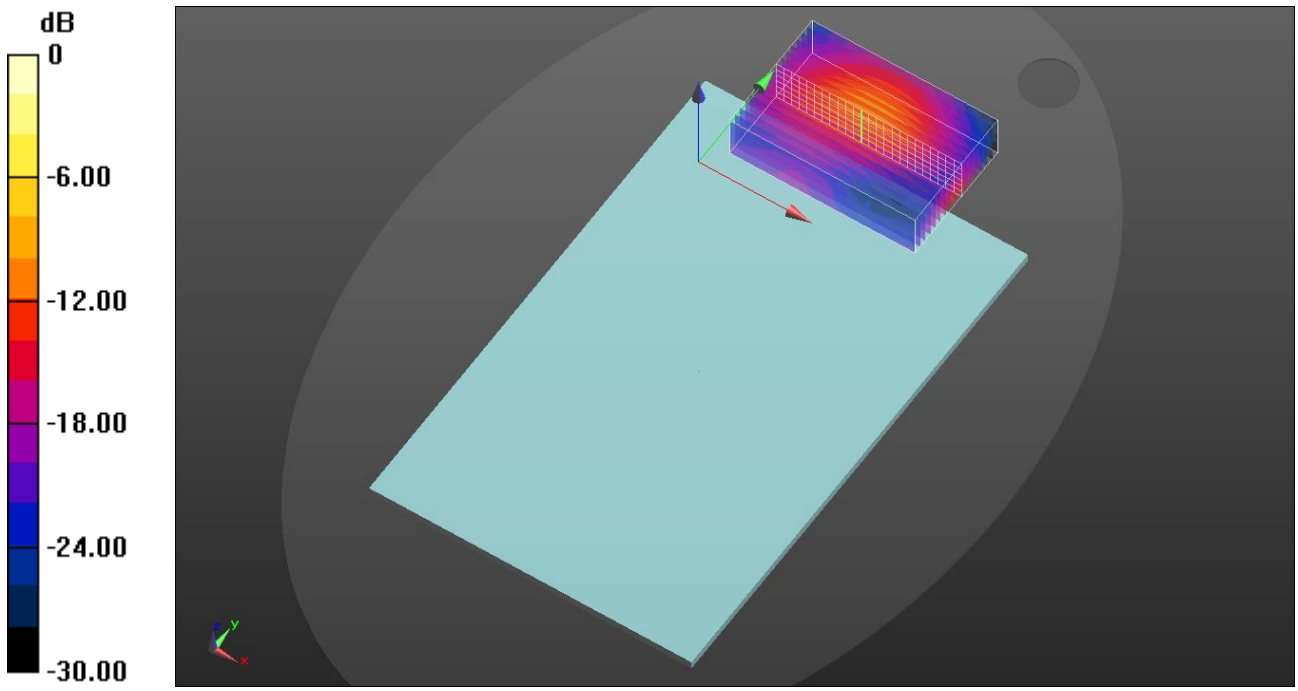

0 dB = 0.466 W/kg = −3.32 dBW/kg

LTE Band 66

Frequency: 1745 MHz; Duty Cycle: 1:1; Room Ambient Temperature: 23.0°C; Liquid Temperature: 22.0°C
Medium parameters used: f = 1745 MHz; σ = 1.354 S/m; ε_r = 39.468; ρ = 1000 kg/m^3
DASY5 Configuration:
- Area Scan Setting: Find Secondary Maximum Within: 2.0 dB and with a peak SAR value greater than 0.012W/kg
- Electronics: DAE4 Sn1468; Calibrated: 9/27/2021
- Probe: EX3DV4 - SN7645; ConvF(9.3, 9.3, 9.3) @ 1745 MHz; Calibrated: 4/15/2021
- Sensor-Surface: 1.4mm (Mechanical Surface Detection)
- Phantom: ELI v6.0; Type: QDOVA003AA; Serial: TP:2005

Volume scan/QPSK RB 1/49 ch.132322/Volume Scan (17x25x7): Measurement grid: dx=5mm, dy=5mm, dz=5mm

Reference Value = 14.25 V/m; Power Drift = 0.12 dB
Peak SAR (extrapolated) = 0.670 W/kg
SAR(1 g) = 0.258 W/kg; SAR(10 g) = 0.106 W/kg
Maximum value of SAR (measured) = 0.487 W/kg

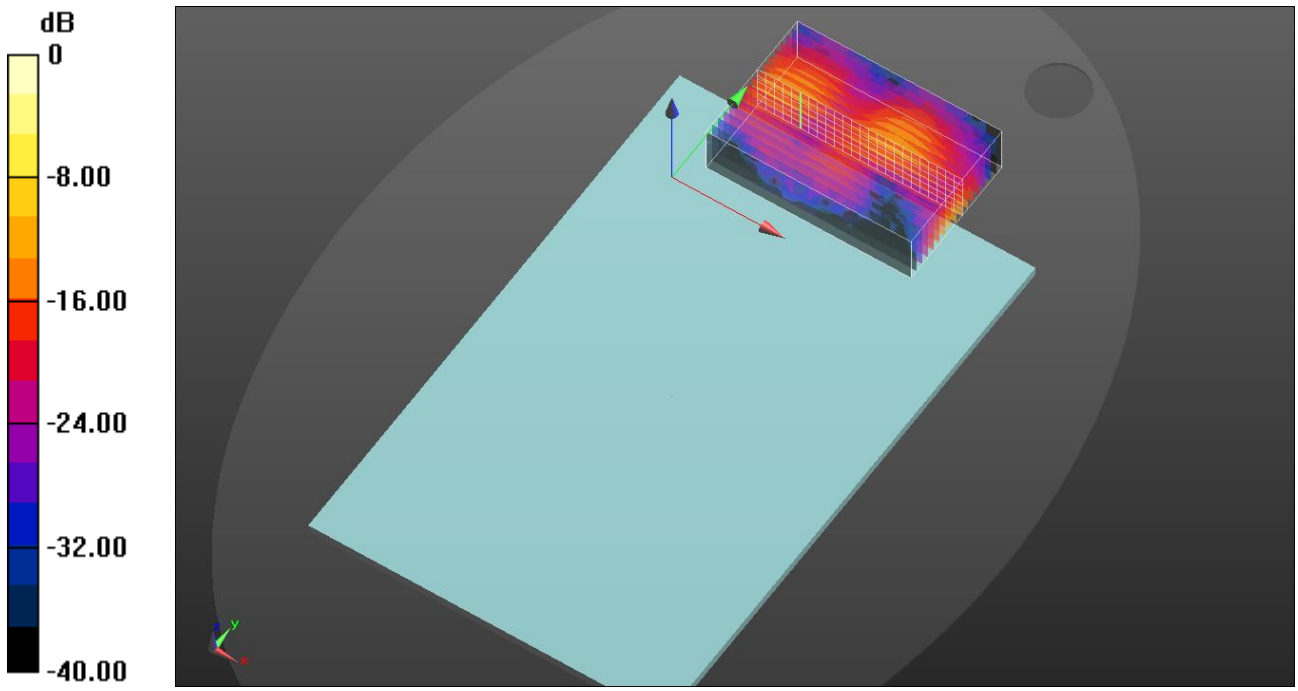

0 dB = 0.487 W/kg = −3.12 dBW/kg

LTE Band 5

Frequency: 836.5 MHz; Duty Cycle: 1:1; Room Ambient Temperature: 23.0°C; Liquid Temperature: 22.0°C
Medium parameters used (interpolated): f = 836.5 MHz; σ = 0.896 S/m; ε_r = 41.343; ρ = 1000 kg/m^3
DASY5 Configuration:
- Area Scan Setting: Find Secondary Maximum Within: 2.0 dB and with a peak SAR value greater than 0.012W/kg
- Electronics: DAE4 Sn1468; Calibrated: 9/27/2021
- Probe: EX3DV4 - SN7645; ConvF(10.56, 10.56, 10.56) @ 836.5 MHz; Calibrated: 4/15/2021
- Sensor-Surface: 1.4mm (Mechanical Surface Detection)
- Phantom: ELI v6.0; Type: QDOVA003AA; Serial: TP:2005

Volume scan/QPSK RB 1/25 ch.20525/Volume Scan (17x25x5): Measurement grid: dx=5mm, dy=5mm, dz=5mm

Reference Value = 14.61 V/m; Power Drift = -0.17 dB
Peak SAR (extrapolated) = 0.885 W/kg
SAR(1 g) = 0.271 W/kg; SAR(10 g) = 0.134 W/kg
Maximum value of SAR (measured) = 0.426 W/kg

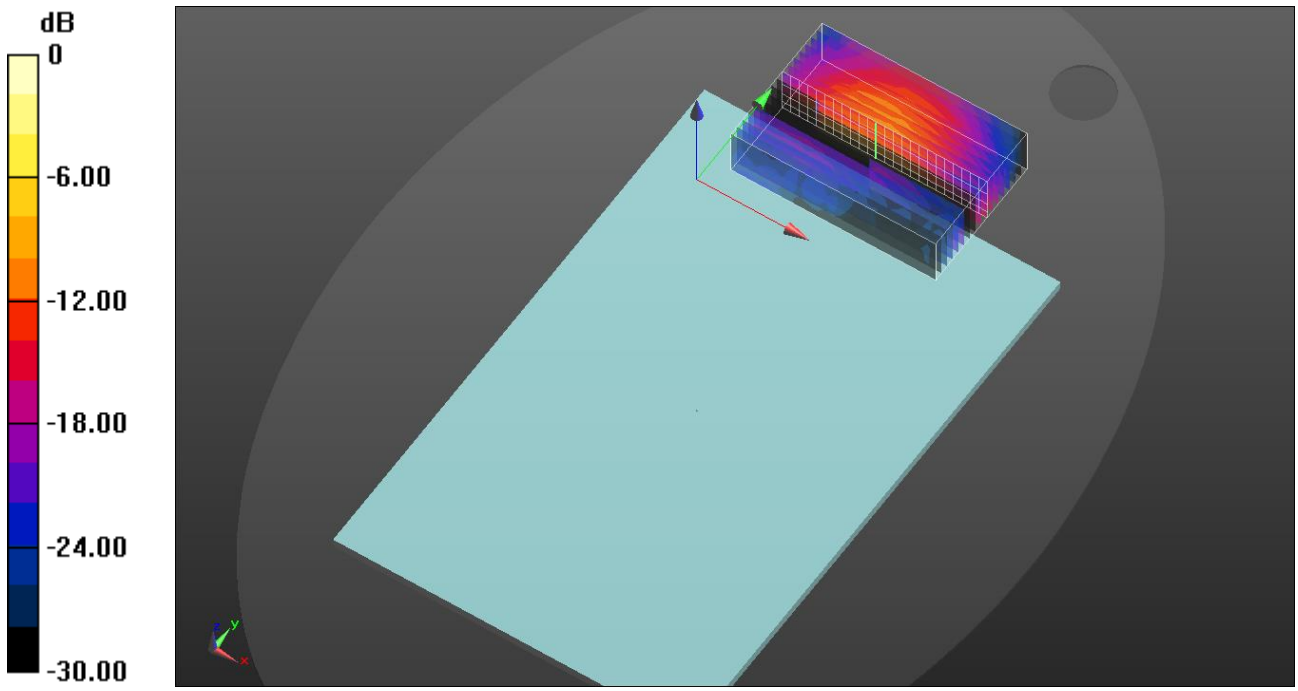

0 dB = 0.426 W/kg = −3.71 dBW/kg

NR Band n66

Frequency: 1745 MHz; Duty Cycle: 1:1; Room Ambient Temperature: 23.0°C; Liquid Temperature: 22.0°C
Medium parameters used: f = 1745 MHz; σ = 1.354 S/m; ε_r = 39.468; ρ = 1000 kg/m^3
DASY5 Configuration:
- Area Scan Setting: Find Secondary Maximum Within: 2.0 dB and with a peak SAR value greater than 0.012W/kg
- Electronics: DAE4 Sn1468; Calibrated: 9/27/2021
- Probe: EX3DV4 - SN7645; ConvF(9.3, 9.3, 9.3) @ 1745 MHz; Calibrated: 4/15/2021
- Sensor-Surface: 1.4mm (Mechanical Surface Detection)
- Phantom: ELI v6.0; Type: QDOVA003AA; Serial: TP:2005

Volume scan/QPSK RB 1/1 ch.349000/Volume Scan (17x25x7): Measurement grid: dx=5mm, dy=5mm, dz=5mm
Reference Value = 13.66 V/m; Power Drift = -0.06 dB
Peak SAR (extrapolated) = 0.583 W/kg
SAR(1 g) = 0.223 W/kg; SAR(10 g) = 0.093 W/kg
Maximum value of SAR (measured) = 0.440 W/kg

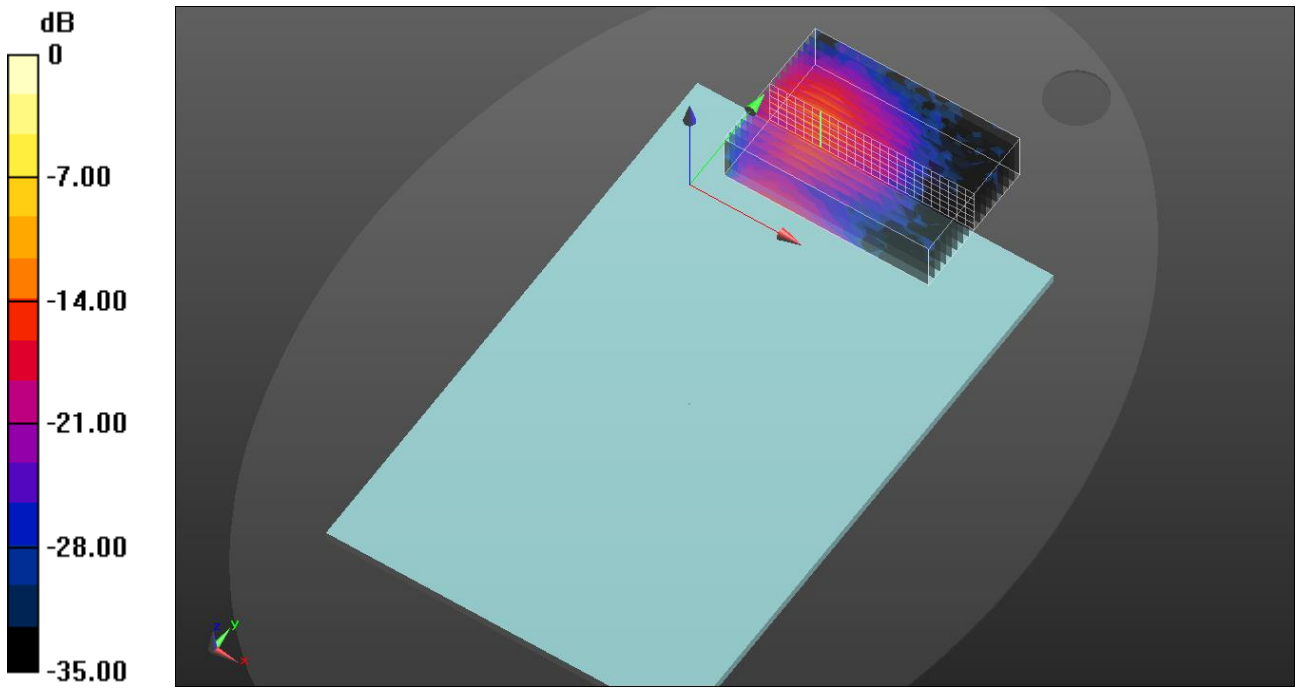

0 dB = 0.440 W/kg = −3.57 dBW/kg

LTE Band 12

Frequency: 707.5 MHz; Duty Cycle: 1:1; Room Ambient Temperature: 23.0°C; Liquid Temperature: 22.0°C
Medium parameters used (interpolated): f = 707.5 MHz; σ = 0.869 S/m; ε_r = 40.883; ρ = 1000 kg/m^3
DASY5 Configuration:
- Area Scan Setting: Find Secondary Maximum Within: 2.0 dB and with a peak SAR value greater than 0.012W/kg
- Electronics: DAE4 Sn1468; Calibrated: 9/27/2021
- Probe: EX3DV4 - SN7645; ConvF(10.76, 10.76, 10.76) @ 707.5 MHz; Calibrated: 4/15/2021
- Sensor-Surface: 1.4mm (Mechanical Surface Detection)
- Phantom: ELI v6.0; Type: QDOVA003AA; Serial: TP:2005

Volume scan/QPSK RB 25/12 ch.23095/Volume Scan (17x25x5): Measurement grid: dx=5mm, dy=5mm, dz=5mm

Reference Value = 17.78 V/m; Power Drift = -0.12 dB
Peak SAR (extrapolated) = 0.652 W/kg
SAR(1 g) = 0.273 W/kg; SAR(10 g) = 0.136 W/kg
Maximum value of SAR (measured) = 0.481 W/kg

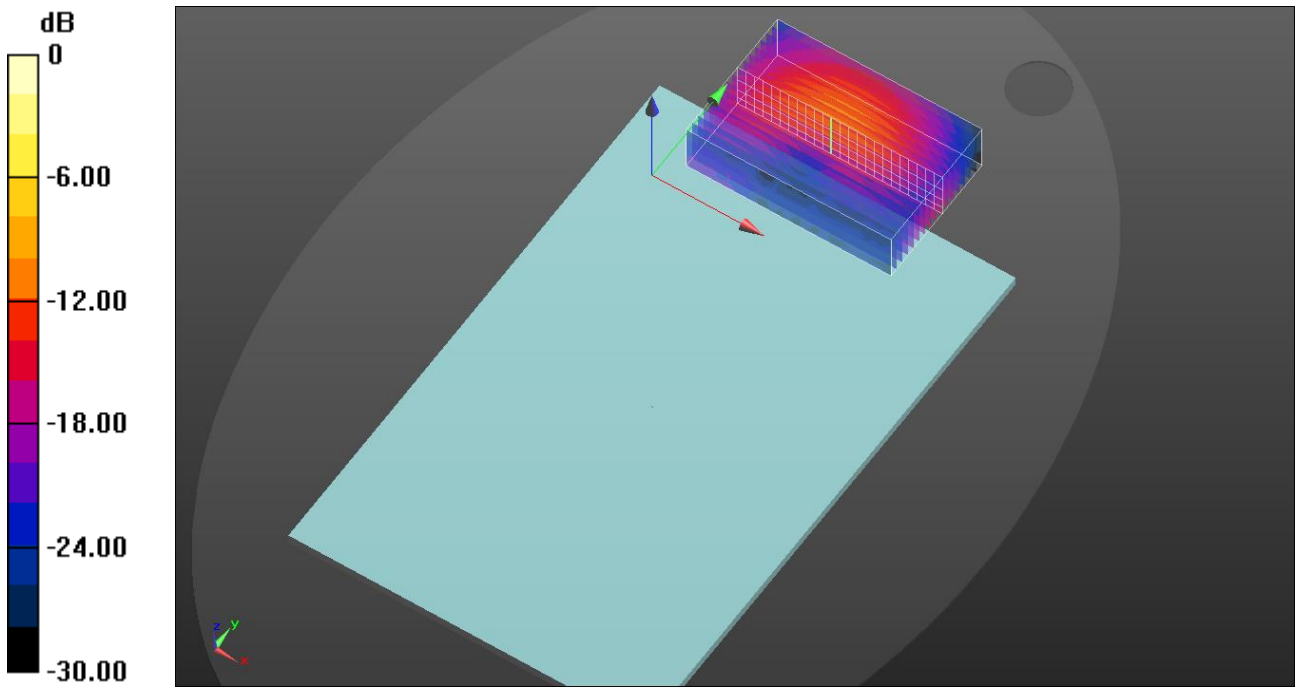

0 dB = 0.481 W/kg = −3.18 dBW/kg

LTE Band 13

Frequency: 782 MHz; Duty Cycle: 1:1; Room Ambient Temperature: 23.0°C; Liquid Temperature: 22.0°C
Medium parameters used (interpolated): f = 782 MHz; σ = 0.884 S/m; ε_r = 40.864; ρ = 1000 kg/m^3
DASY5 Configuration:
- Area Scan Setting: Find Secondary Maximum Within: 2.0 dB and with a peak SAR value greater than 0.012W/kg
- Electronics: DAE4 Sn1468; Calibrated: 9/27/2021
- Probe: EX3DV4 - SN7645; ConvF(10.76, 10.76, 10.76) @ 782 MHz; Calibrated: 4/15/2021
- Sensor-Surface: 1.4mm (Mechanical Surface Detection)
- Phantom: ELI v6.0; Type: QDOVA003AA; Serial: TP:2005

Volume scan/QPSK RB 1/25 ch.23230/Volume Scan (17x25x5): Measurement grid: dx=5mm, dy=5mm, dz=5mm

Reference Value = 13.00 V/m; Power Drift = -0.13 dB
Peak SAR (extrapolated) = 0.555 W/kg
SAR(1 g) = 0.243 W/kg; SAR(10 g) = 0.123 W/kg
Maximum value of SAR (measured) = 0.419 W/kg

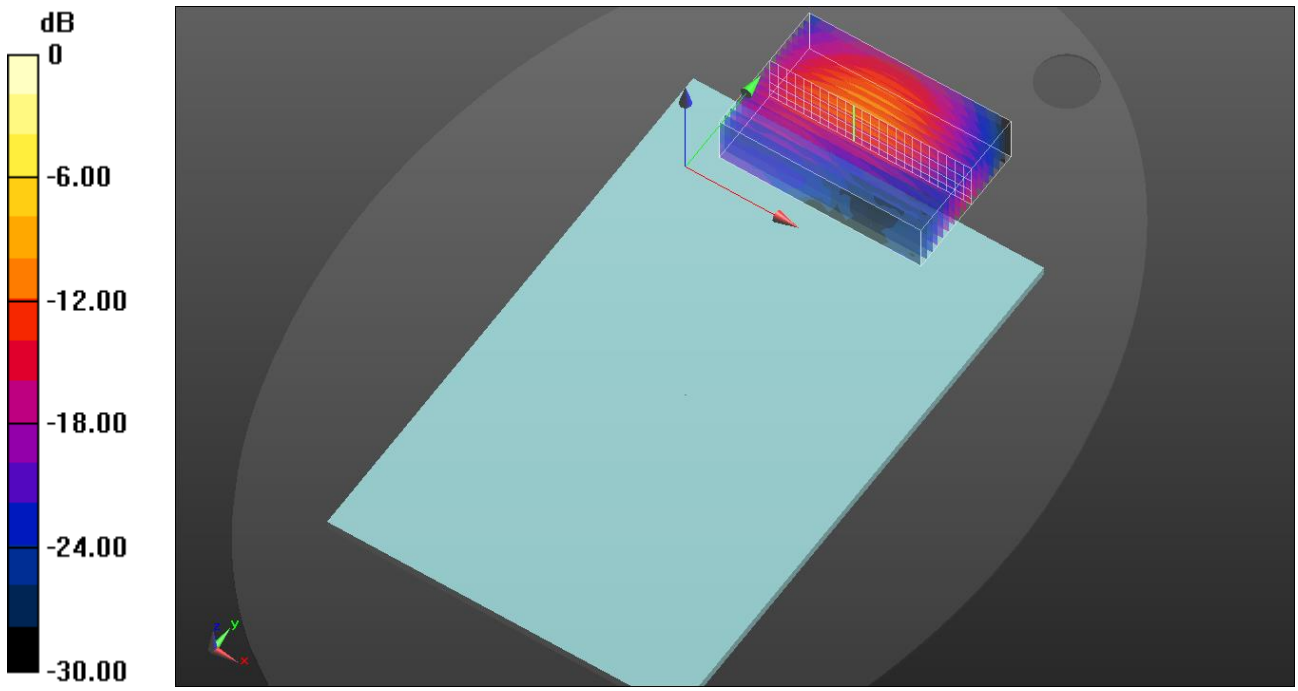

0 dB = 0.419 W/kg = −3.78 dBW/kg

LTE Band 25

Frequency: 1905 MHz; Duty Cycle: 1:1; Room Ambient Temperature: 23.0°C; Liquid Temperature: 22.0°C
Medium parameters used: f = 1905 MHz; σ = 1.414 S/m; ε_r = 39.241; ρ = 1000 kg/m^3
DASY5 Configuration:
- Area Scan Setting: Find Secondary Maximum Within: 2.0 dB and with a peak SAR value greater than 0.012W/kg
- Electronics: DAE4 Sn1468; Calibrated: 9/27/2021
- Probe: EX3DV4 - SN7645; ConvF(8.9, 8.9, 8.9) @ 1905 MHz; Calibrated: 4/15/2021
- Sensor-Surface: 1.4mm (Mechanical Surface Detection)
- Phantom: ELI v6.0; Type: QDOVA003AA; Serial: TP:2005

Volume scan/QPSK RB 1/49 ch.26590/Volume Scan (17x25x5): Measurement grid: dx=5mm, dy=5mm, dz=5mm
Reference Value = 14.37 V/m; Power Drift = 0.03 dB
Peak SAR (extrapolated) = 0.476 W/kg
SAR(1 g) = 0.268 W/kg; SAR(10 g) = 0.150 W/kg
Maximum value of SAR (measured) = 0.390 W/kg

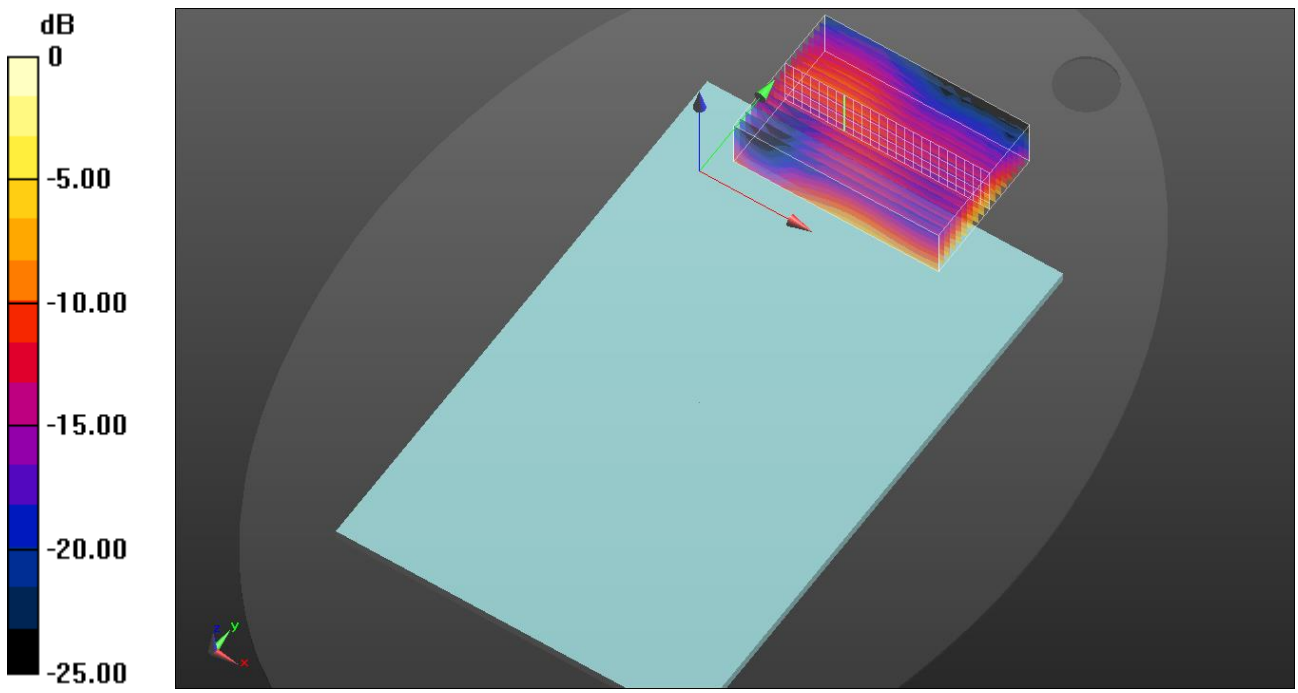

0 dB = 0.390 W/kg = −4.09 dBW/kg

NR Band n5

Frequency: 836.5 MHz; Duty Cycle: 1:1; Room Ambient Temperature: 23.0°C; Liquid Temperature: 22.0°C
Medium parameters used (interpolated): f = 836.5 MHz; σ = 0.896 S/m; ε_r = 41.343; ρ = 1000 kg/m^3
DASY5 Configuration:
- Area Scan Setting: Find Secondary Maximum Within: 2.0 dB and with a peak SAR value greater than 0.012W/kg
- Electronics: DAE4 Sn1468; Calibrated: 9/27/2021
- Probe: EX3DV4 - SN7645; ConvF(10.56, 10.56, 10.56) @ 836.5 MHz; Calibrated: 4/15/2021
- Sensor-Surface: 1.4mm (Mechanical Surface Detection)
- Phantom: ELI v6.0; Type: QDOVA003AA; Serial: TP:2005

Volume scan/QPSK RB 1/53 ch.167300/Volume Scan (17x25x5): Measurement grid: dx=5mm, dy=5mm, dz=5mm
Reference Value = 26.87 V/m; Power Drift = 0.00 dB
Peak SAR (extrapolated) = 0.959 W/kg
SAR(1 g) = 0.614 W/kg; SAR(10 g) = 0.388 W/kg
Maximum value of SAR (measured) = 0.839 W/kg

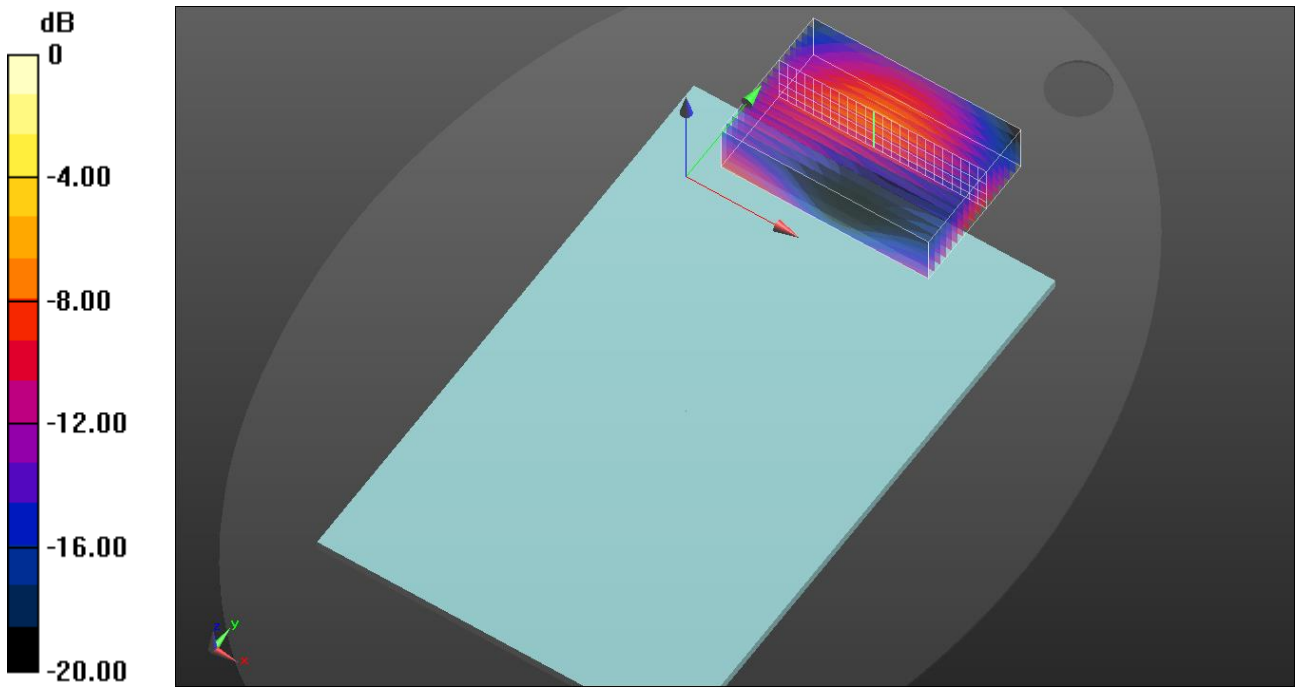

0 dB = 0.839 W/kg = −0.76 dBW/kg

LTE Band 66

Frequency: 1745 MHz; Duty Cycle: 1:1; Room Ambient Temperature: 23.0°C; Liquid Temperature: 22.0°C
Medium parameters used: f = 1745 MHz; σ = 1.328 S/m; ε_r = 39.527; ρ = 1000 kg/m^3
DASY5 Configuration:
- Area Scan Setting: Find Secondary Maximum Within: 2.0 dB and with a peak SAR value greater than 0.012W/kg
- Electronics: DAE4 Sn1468; Calibrated: 9/27/2021
- Probe: EX3DV4 - SN7645; ConvF(9.3, 9.3, 9.3) @ 1745 MHz; Calibrated: 4/15/2021
- Sensor-Surface: 1.4mm (Mechanical Surface Detection)
- Phantom: ELI v6.0; Type: QDOVA003AA; Serial: TP:2005

Volume scan/QPSK RB 1/49 ch.132322/Volume Scan (17x25x5): Measurement grid: dx=5mm, dy=5mm, dz=5mm

Reference Value = 16.50 V/m; Power Drift = -0.03 dB
Peak SAR (extrapolated) = 0.581 W/kg
SAR(1 g) = 0.333 W/kg; SAR(10 g) = 0.194 W/kg
Maximum value of SAR (measured) = 0.488 W/kg

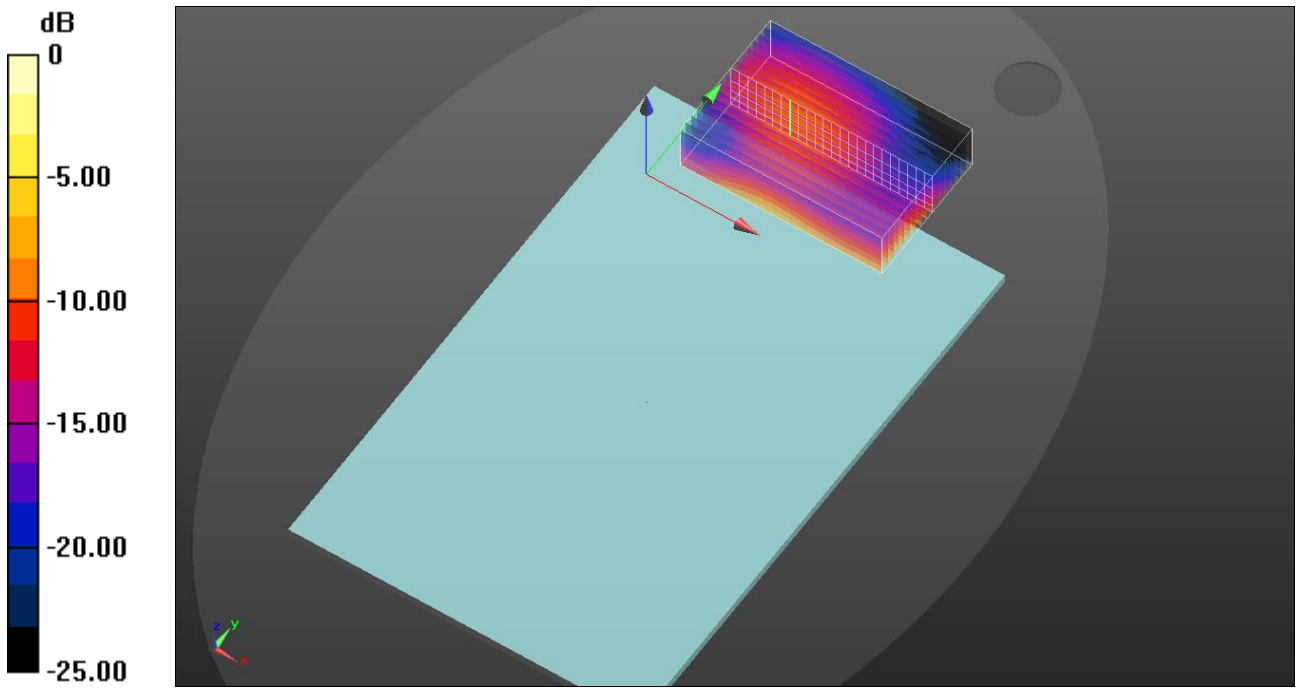

0 dB = 0.488 W/kg = −3.12 dBW/kg

LTE Band 26

Frequency: 831.5 MHz; Duty Cycle: 1:1; Room Ambient Temperature: 23.0°C; Liquid Temperature: 22.0°C
Medium parameters used (interpolated): f = 831.5 MHz; σ = 0.897 S/m; ε_r = 41.331; ρ = 1000 kg/m^3
DASY5 Configuration:
- Area Scan Setting: Find Secondary Maximum Within: 2.0 dB and with a peak SAR value greater than 0.012W/kg
- Electronics: DAE4 Sn1468; Calibrated: 9/27/2021
- Probe: EX3DV4 - SN7645; ConvF(10.56, 10.56, 10.56) @ 831.5 MHz; Calibrated: 4/15/2021
- Sensor-Surface: 1.4mm (Mechanical Surface Detection)
- Phantom: ELI v6.0; Type: QDOVA003AA; Serial: TP:2005

Volume scan/QPSK RB 1/37 ch.26865/Volume Scan (17x25x5): Measurement grid: dx=5mm, dy=5mm, dz=5mm

Reference Value = 21.17 V/m; Power Drift = -0.05 dB
Peak SAR (extrapolated) = 0.966 W/kg
SAR(1 g) = 0.631 W/kg; SAR(10 g) = 0.409 W/kg
Maximum value of SAR (measured) = 0.834 W/kg

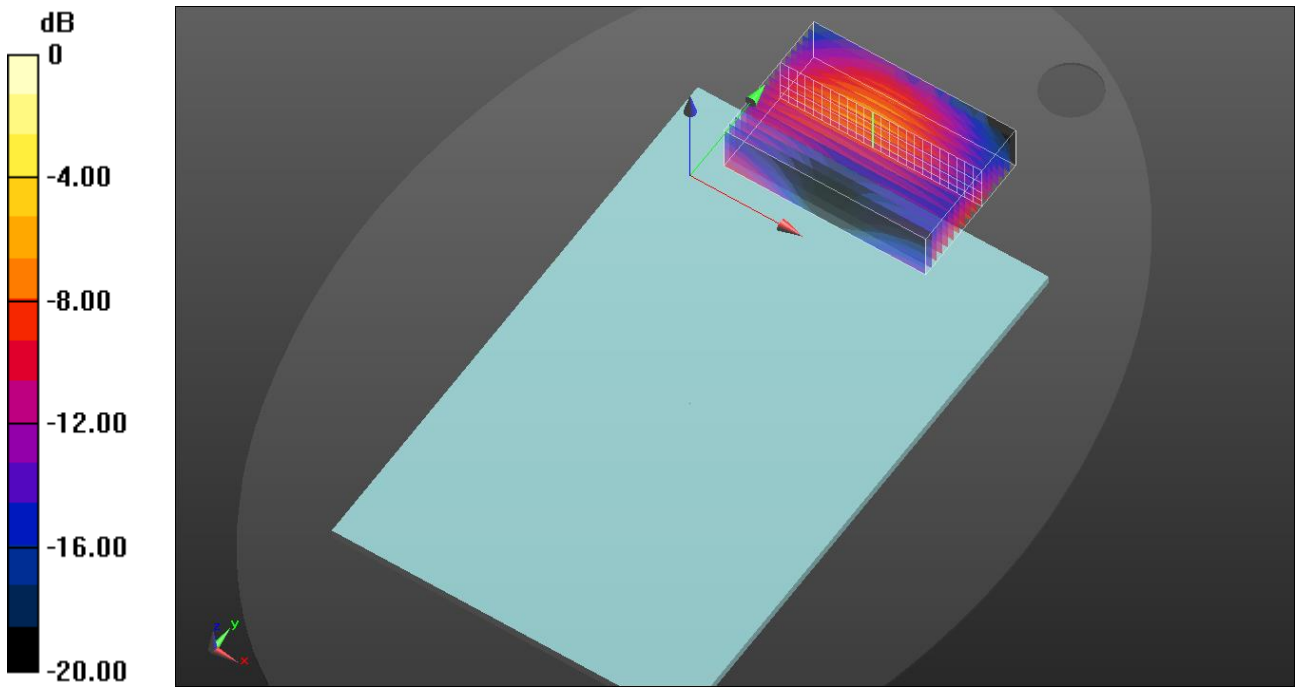

0 dB = 0.834 W/kg = −0.79 dBW/kg

NR Band n66

Frequency: 1745 MHz; Duty Cycle: 1:1; Room Ambient Temperature: 23.0°C; Liquid Temperature: 22.0°C
Medium parameters used: f = 1745 MHz; σ = 1.328 S/m; ε_r = 39.527; ρ = 1000 kg/m^3
DASY5 Configuration:
- Area Scan Setting: Find Secondary Maximum Within: 2.0 dB and with a peak SAR value greater than 0.012W/kg
- Electronics: DAE4 Sn1468; Calibrated: 9/27/2021
- Probe: EX3DV4 - SN7645; ConvF(9.3, 9.3, 9.3) @ 1745 MHz; Calibrated: 4/15/2021
- Sensor-Surface: 1.4mm (Mechanical Surface Detection)
- Phantom: ELI v6.0; Type: QDOVA003AA; Serial: TP:2005

Volume scan/QPSK RB 50/25 ch.349000/Volume Scan (17x25x5): Measurement grid: dx=5mm, dy=5mm, dz=5mm
Reference Value = 17.06 V/m; Power Drift = 0.09 dB
Peak SAR (extrapolated) = 0.642 W/kg
SAR(1 g) = 0.365 W/kg; SAR(10 g) = 0.210 W/kg
Maximum value of SAR (measured) = 0.535 W/kg

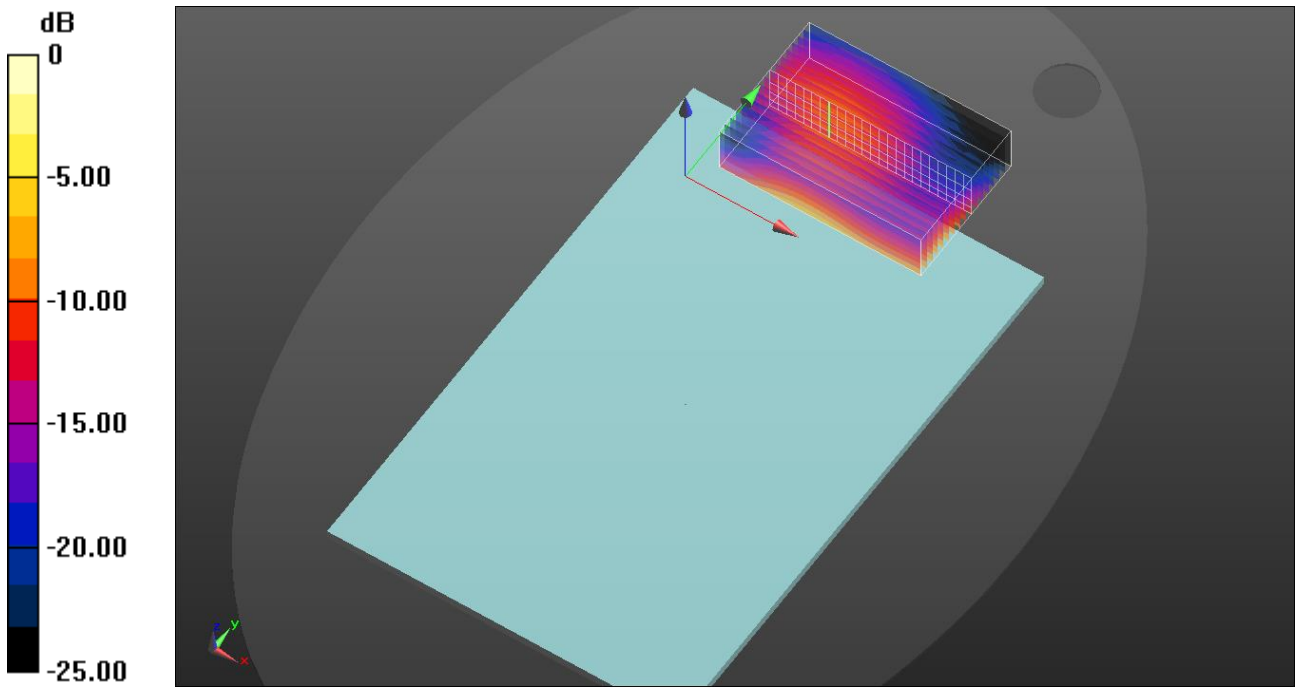

0 dB = 0.535 W/kg = −2.72 dBW/kg

LTE Band 12

Frequency: 707.5 MHz; Duty Cycle: 1:1; Room Ambient Temperature: 23.0°C; Liquid Temperature: 22.0°C
Medium parameters used (interpolated): f = 707.5 MHz; σ = 0.869 S/m; ε_r = 40.883; ρ = 1000 kg/m^3
DASY5 Configuration:
- Area Scan Setting: Find Secondary Maximum Within: 2.0 dB and with a peak SAR value greater than 0.012W/kg
- Electronics: DAE4 Sn1468; Calibrated: 9/27/2021
- Probe: EX3DV4 - SN7645; ConvF(10.76, 10.76, 10.76) @ 707.5 MHz; Calibrated: 4/15/2021
- Sensor-Surface: 1.4mm (Mechanical Surface Detection)
- Phantom: ELI v6.0; Type: QDOVA003AA; Serial: TP:2005

Volume scan/QPSK RB 1/0 ch.20395/Volume Scan (17x25x5): Measurement grid: dx=5mm, dy=5mm, dz=5mm

Reference Value = 24.96 V/m; Power Drift = 0.06 dB
Peak SAR (extrapolated) = 0.773 W/kg
SAR(1 g) = 0.510 W/kg; SAR(10 g) = 0.332 W/kg
Maximum value of SAR (measured) = 0.683 W/kg

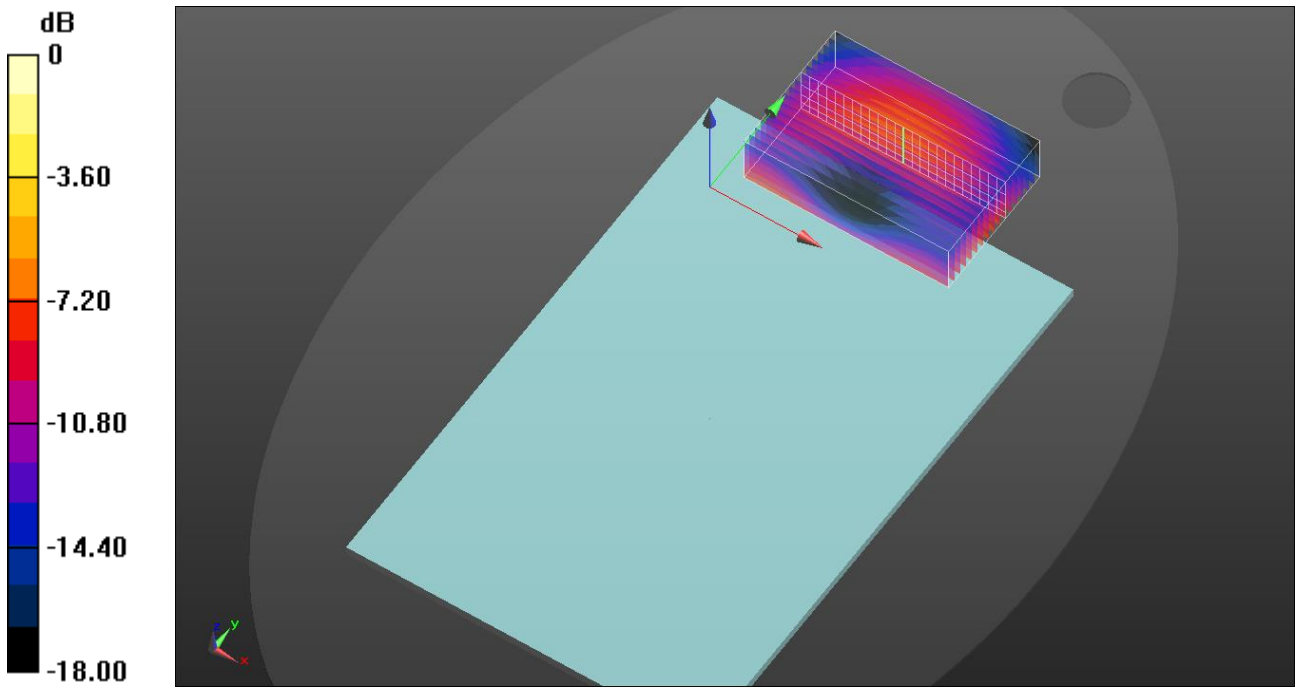

0 dB = 0.683 W/kg = −1.66 dBW/kg

LTE Band 13

Frequency: 782 MHz; Duty Cycle: 1:1; Room Ambient Temperature: 23.0°C; Liquid Temperature: 22.0°C
Medium parameters used (interpolated): f = 782 MHz; σ = 0.884 S/m; ε_r = 40.864; ρ = 1000 kg/m^3
DASY5 Configuration:
- Area Scan Setting: Find Secondary Maximum Within: 2.0 dB and with a peak SAR value greater than 0.012W/kg
- Electronics: DAE4 Sn1468; Calibrated: 9/27/2021
- Probe: EX3DV4 - SN7645; ConvF(10.76, 10.76, 10.76) @ 782 MHz; Calibrated: 4/15/2021
- Sensor-Surface: 1.4mm (Mechanical Surface Detection)
- Phantom: ELI v6.0; Type: QDOVA003AA; Serial: TP:2005

Volume scan/QPSK RB 1/25 ch.23230/Volume Scan (17x25x5): Measurement grid: dx=5mm, dy=5mm, dz=5mm

Reference Value = 26.18 V/m; Power Drift = -0.02 dB
Peak SAR (extrapolated) = 0.878 W/kg
SAR(1 g) = 0.577 W/kg; SAR(10 g) = 0.372 W/kg
Maximum value of SAR (measured) = 0.763 W/kg

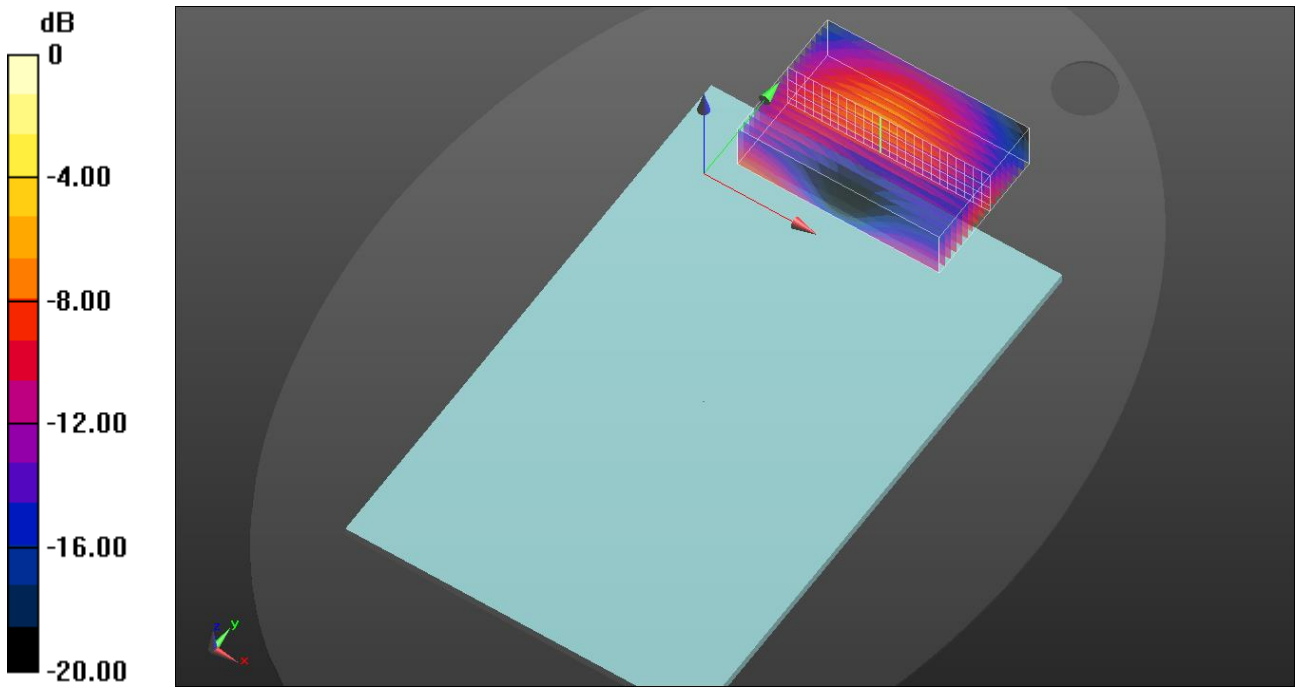

0 dB = 0.763 W/kg = −1.17 dBW/kg

UNII RSDB MIMO

Frequency: 5775 MHz; Duty Cycle: 1:1; Room Ambient Temperature: 23.0°C; Liquid Temperature: 22.0°C
Medium parameters used: f = 5775 MHz; σ = 5.35 S/m; ε_r = 35.013; ρ = 1000 kg/m^3
DASY5 Configuration:
- Area Scan Setting: Find Secondary Maximum Within: 2.0 dB and with a peak SAR value greater than 0.012W/kg
- Electronics: DAE4 Sn1343; Calibrated: 8/23/2021
- Probe: EX3DV4 - SN7314; ConvF(4.9, 4.9, 4.9) @ 5775 MHz; Calibrated: 5/31/2021
- Sensor-Surface: 1.4mm (Mechanical Surface Detection)
- Phantom: ELI V6.0 (20deg probe tilt); Type: QD OVA 003 AA; Serial: 2013

Volume scan/802.11 ac mode ch.155/Volume Scan (61x23x7): Measurement grid: dx=4mm, dy=4mm, dz=1.4mm

Reference Value = 8.768 V/m; Power Drift = 0.01 dB
Peak SAR (extrapolated) = 6.85 W/kg
SAR(1 g) = 0.438 W/kg; SAR(10 g) = 0.104 W/kg
Maximum value of SAR (measured) = 1.67 W/kg

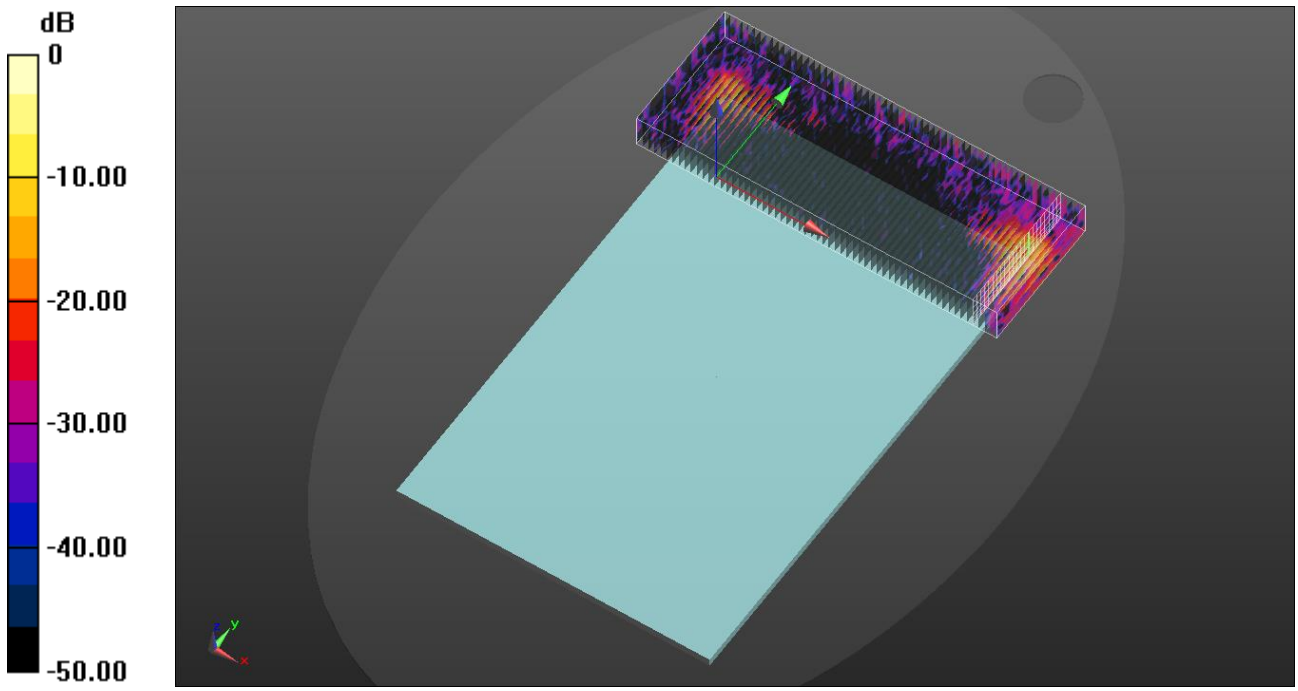

0 dB = 1.67 W/kg = 2.23 dBW/kg

GSM 850 + Bluetooth Ant1

Multi-Band Average SAR
Multi-Band Configurations:

DASY Configuration for Volume Scan/GPRS 2 slots ch.190/Volume Scan:

Date/Time: 2021-11-16, Test Laboratory: UL Korea, Ltd. Suwon Laboratory
Communication System: UID 0, LTE (FDD) (0); Frequency: 836.5 MHz; Duty Cycle: 1:1; PMF: 1
Medium: HSL835 Medium parameters used (interpolated): f = 836.5 MHz; σ = 0.943 S/m; ε_r = 41.745; ρ = 1000 kg/m^3
Measurement Standard: DASY5 (IEEE/IEC/ANSI C63.19-2011)

- Probe: EX3DV4 - SN7330; ConvF(10.8, 10.8, 10.8) @ 836.5 MHz; Calibrated: 2021-09-29
- Sensor-Surface: 1.4mm (Mechanical Surface Detection)
- Electronics: DAE4 Sn1591; Calibrated: 2021-03-26
- Phantom: ELI V6.0 (20deg probe tilt) (Left); Type: QD OVA 003 AA; Serial: 2111
- Measurement SW: DASY52, Version 52.10 (3)

DASY Configuration for Volume scan/GFSK ch.39/Volume Scan:

Date/Time: 2021-11-12, Test Laboratory: UL Korea, Ltd. Suwon Laboratory
Communication System: UID 0, Bluetooth (DH5) (0); Frequency: 2441 MHz; Duty Cycle: 1:1.29033; PMF: 1
Medium: HSL 2450 Medium parameters used (interpolated): f = 2441 MHz; σ = 1.836 S/m; ε_r = 39.761; ρ = 1000 kg/m^3
Measurement Standard: DASY5 (IEEE/IEC/ANSI C63.19-2011)

- Probe: EX3DV4 - SN7645; ConvF(8.26, 8.26, 8.26) @ 2441 MHz; Calibrated: 2021-04-15
- Sensor-Surface: 1.4mm (Mechanical Surface Detection)
- Electronics: DAE4 Sn1468; Calibrated: 2021-09-27
- Phantom: ELI v6.0; Type: QDOVA003AA; Serial: TP:2005
- Measurement SW: DASY52, Version 52.10 (4)

Multi Band Result:
SAR(1 g) = 0.623 W/kg; SAR(10 g) = 0.401 W/kg
Maximum value of SAR (interpolated) = 0.974 W/kg

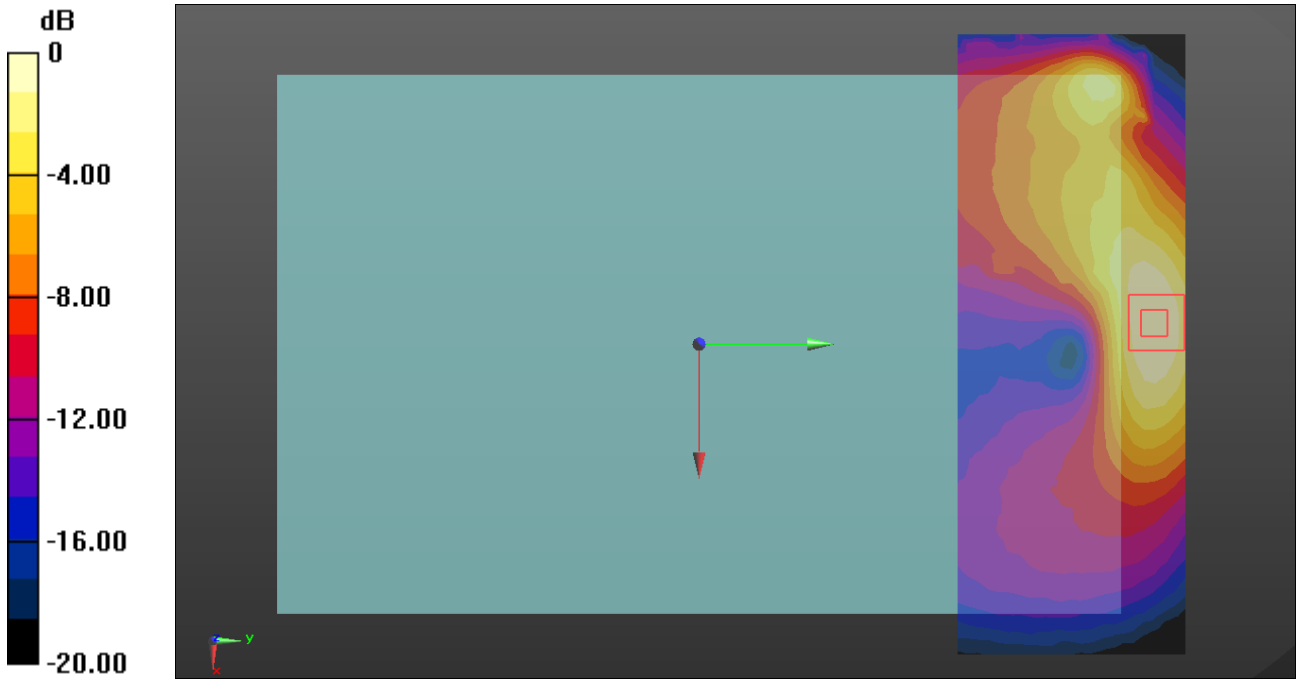

0 dB = 0.974 W/kg = -0.11 dBW/kg

UNII MIMO + Bluetooth Ant2

Multi-Band Average SAR
Multi-Band Configurations:

DASY Configuration for Configuration/802.11 ac mode ch.58 MIMO/Volume Scan:

Date/Time: 2021-11-17, Test Laboratory: UL Korea, Ltd. Suwon Laboratory
Communication System: UID 0, IEEE 802.11a/n/ac 5 GHz Band (0); Frequency: 5290 MHz; Duty Cycle: 1:1; PMF: 1
Medium: HSL 5GHz Medium parameters used: f = 5290 MHz; σ = 4.708 S/m; ε_r = 35.208; ρ = 1000 kg/m^3
Measurement Standard: DASY5 (IEEE/IEC/ANSI C63.19-2011)

- Probe: EX3DV4 - SN7645; ConvF(5.94, 5.94, 5.94) @ 5290 MHz; Calibrated: 2021-04-15
- Sensor-Surface: 1.4mm (Mechanical Surface Detection)
- Electronics: DAE4 Sn1468; Calibrated: 2021-09-27
- Phantom: ELI v6.0; Type: QDOVA003AA; Serial: TP:2005
- Measurement SW: DASY52, Version 52.10 (3)

DASY Configuration for Volume scan/GFSK ch.39/Volume Scan:

Date/Time: 2021-11-12, Test Laboratory: UL Korea, Ltd. Suwon Laboratory
Communication System: UID 0, Bluetooth (DH5) (0); Frequency: 2441 MHz; Duty Cycle: 1:1.29033; PMF: 1
Medium: HSL 2450 Medium parameters used (interpolated): f = 2441 MHz; σ = 1.836 S/m; ε_r = 39.761; ρ = 1000 kg/m^3
Measurement Standard: DASY5 (IEEE/IEC/ANSI C63.19-2011)

- Probe: EX3DV4 - SN7645; ConvF(8.26, 8.26, 8.26) @ 2441 MHz; Calibrated: 2021-04-15
- Sensor-Surface: 1.4mm (Mechanical Surface Detection)
- Electronics: DAE4 Sn1468; Calibrated: 2021-09-27
- Phantom: ELI v6.0; Type: QDOVA003AA; Serial: TP:2005
- Measurement SW: DASY52, Version 52.10 (3)

Multi Band Result:
SAR(1 g) = 1.23 W/kg; SAR(10 g) = 0.410 W/kg
Maximum value of SAR (interpolated) = 5.66 W/kg

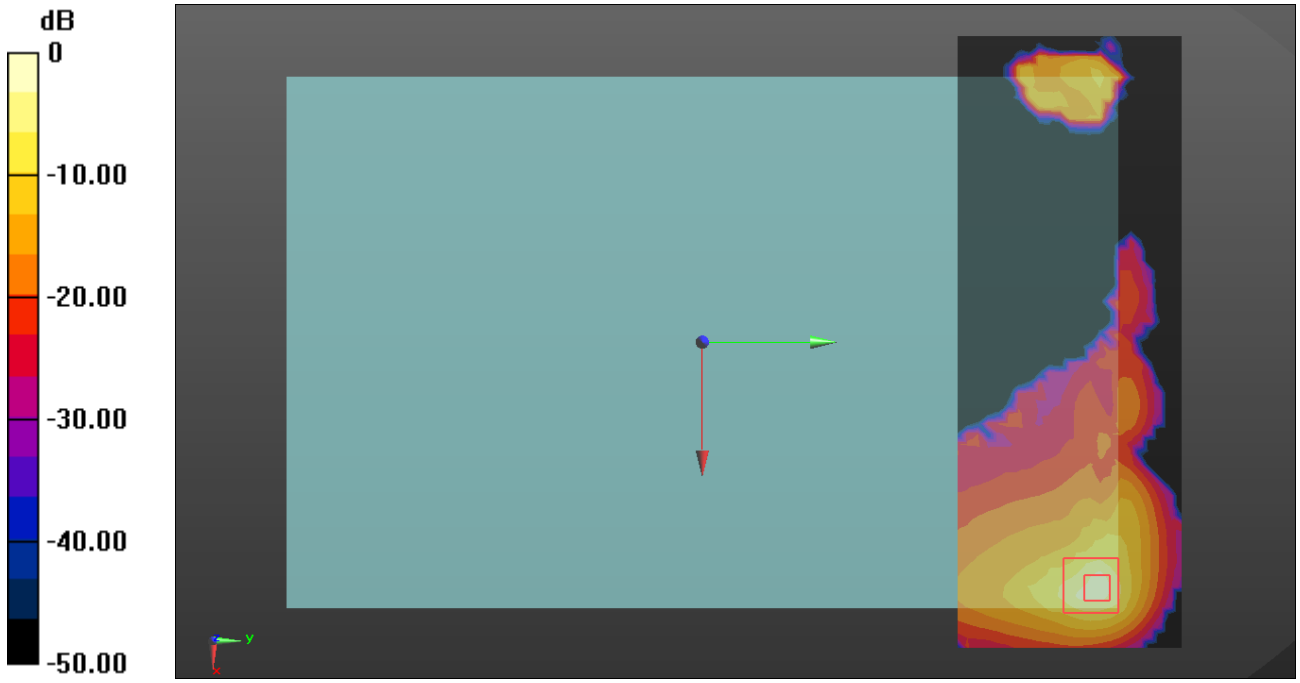

0 dB = 5.66 W/kg = 7.53 dBW/kg

GSM 850 + DTS Ant1

Multi-Band Average SAR
Multi-Band Configurations:

DASY Configuration for Volume Scan/GPRS 2 slots ch.190/Volume Scan:

Date/Time: 2021-11-16, Test Laboratory: UL Korea, Ltd. Suwon Laboratory
Communication System: UID 0, LTE (FDD) (0); Frequency: 836.5 MHz; Duty Cycle: 1:1; PMF: 1
Medium: HSL835 Medium parameters used (interpolated): f = 836.5 MHz; σ = 0.943 S/m; ε_r = 41.745; ρ = 1000 kg/m^3
Measurement Standard: DASY5 (IEEE/IEC/ANSI C63.19-2011)

- Probe: EX3DV4 - SN7330; ConvF(10.8, 10.8, 10.8) @ 836.5 MHz; Calibrated: 2021-09-29
- Sensor-Surface: 1.4mm (Mechanical Surface Detection)
- Electronics: DAE4 Sn1591; Calibrated: 2021-03-26
- Phantom: ELI V6.0 (20deg probe tilt) (Left); Type: QD OVA 003 AA; Serial: 2111
- Measurement SW: DASY52, Version 52.10 (3)

DASY Configuration for Volume scan/802.11b mode ch.6 SISO Ant 1/Volume Scan:

Date/Time: 2021-11-17, Test Laboratory: UL Korea, Ltd. Suwon Laboratory
Communication System: UID 0, IEEE 802.11b/g/n 2.4 GHz Band (0); Frequency: 2437 MHz; Duty Cycle: 1:1; PMF: 1
Medium: HSL 2450 Medium parameters used (interpolated): f = 2437 MHz; σ = 1.788 S/m; ε_r = 38.425; ρ = 1000 kg/m^3
Measurement Standard: DASY5 (IEEE/IEC/ANSI C63.19-2011)

- Probe: EX3DV4 - SN7314; ConvF(7.47, 7.47, 7.47) @ 2437 MHz; Calibrated: 2021-05-31
- Sensor-Surface: 1.4mm (Mechanical Surface Detection)
- Electronics: DAE4 Sn1343; Calibrated: 2021-08-23
- Phantom: ELI V6.0 (20deg probe tilt); Type: QD OVA 003 AA; Serial: 2013
- Measurement SW: DASY52, Version 52.10 (3)

Multi Band Result:
SAR(1 g) = 0.623 W/kg; SAR(10 g) = 0.401 W/kg
Maximum value of SAR (interpolated) = 0.974 W/kg

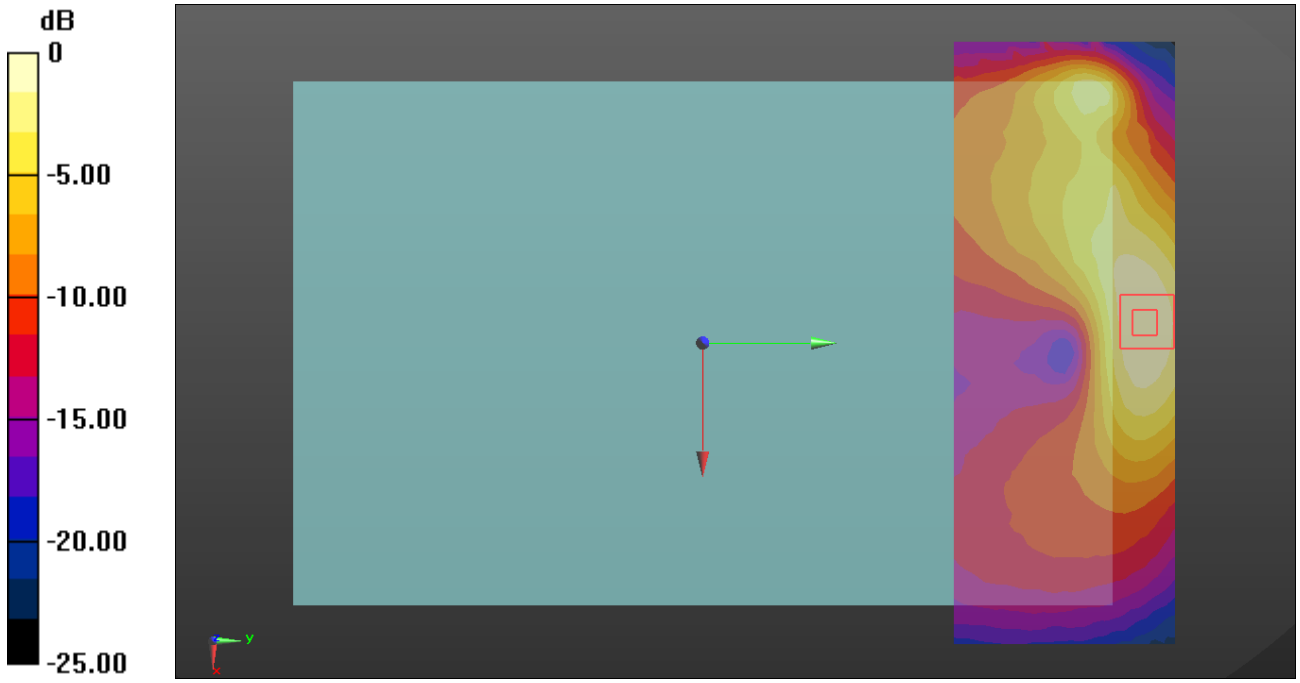

0 dB = 0.974 W/kg = -0.11 dBW/kg

GSM 850 + DTS MIMO

Multi-Band Average SAR
Multi-Band Configurations:

DASY Configuration for Volume Scan/GPRS 2 slots ch.190/Volume Scan:

Date/Time: 2021-11-16, Test Laboratory: UL Korea, Ltd. Suwon Laboratory
Communication System: UID 0, LTE (FDD) (0); Frequency: 836.5 MHz; Duty Cycle: 1:1; PMF: 1
Medium: HSL835 Medium parameters used (interpolated): f = 836.5 MHz; σ = 0.943 S/m; ε_r = 41.745; ρ = 1000 kg/m^3
Measurement Standard: DASY5 (IEEE/IEC/ANSI C63.19-2011)

- Probe: EX3DV4 - SN7330; ConvF(10.8, 10.8, 10.8) @ 836.5 MHz; Calibrated: 2021-09-29
- Sensor-Surface: 1.4mm (Mechanical Surface Detection)
- Electronics: DAE4 Sn1591; Calibrated: 2021-03-26
- Phantom: ELI V6.0 (20deg probe tilt) (Left); Type: QD OVA 003 AA; Serial: 2111
- Measurement SW: DASY52, Version 52.10 (3)

DASY Configuration for Volume scan/802.11b mode ch.1 MIMO/Volume Scan:

Date/Time: 2021-11-13, Test Laboratory: UL Korea, Ltd. Suwon Laboratory
Communication System: UID 0, IEEE 802.11b/g/n 2.4 GHz Band (0); Frequency: 2412 MHz; Duty Cycle: 1:1; PMF: 1
Medium: HSL 2450 Medium parameters used (interpolated): f = 2412 MHz; σ = 1.814 S/m; ε_r = 39.822; ρ = 1000 kg/m^3
Measurement Standard: DASY5 (IEEE/IEC/ANSI C63.19-2011)

- Probe: EX3DV4 - SN7645; ConvF(8.26, 8.26, 8.26) @ 2412 MHz; Calibrated: 2021-04-15
- Sensor-Surface: 1.4mm (Mechanical Surface Detection)
- Electronics: DAE4 Sn1468; Calibrated: 2021-09-27
- Phantom: ELI v6.0; Type: QDOVA003AA; Serial: TP:2005
- Measurement SW: DASY52, Version 52.10 (3)

Multi Band Result:
SAR(1 g) = 0.623 W/kg; SAR(10 g) = 0.402 W/kg
Maximum value of SAR (interpolated) = 0.974 W/kg

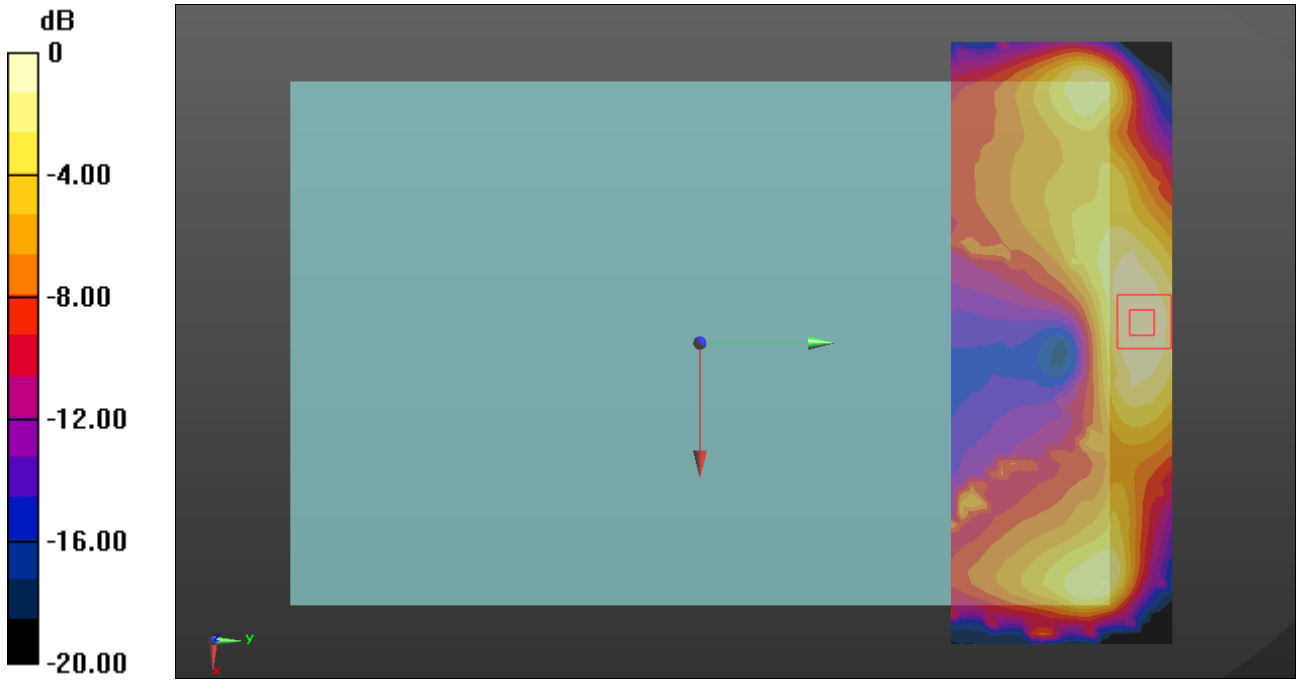

0 dB = 0.974 W/kg = -0.11 dBW/kg

DTS Ant 2 + UNII MIMO

Multi-Band Average SAR
Multi-Band Configurations:

DASY Configuration for Volume scan/802.11b mode ch.1 SISO Ant 2/Volume Scan:

Date/Time: 2021-11-12, Test Laboratory: UL Korea, Ltd. Suwon Laboratory
Communication System: UID 0, IEEE 802.11b/g/n 2.4 GHz Band (0); Frequency: 2412 MHz; Duty Cycle: 1:1; PMF: 1
Medium: HSL 2450 Medium parameters used (interpolated): f = 2412 MHz; σ = 1.814 S/m; ε_r = 39.822; ρ = 1000 kg/m^3
Measurement Standard: DASY5 (IEEE/IEC/ANSI C63.19-2011)

- Probe: EX3DV4 - SN7645; ConvF(8.26, 8.26, 8.26) @ 2412 MHz; Calibrated: 2021-04-15
- Sensor-Surface: 1.4mm (Mechanical Surface Detection)
- Electronics: DAE4 Sn1468; Calibrated: 2021-09-27
- Phantom: ELI v6.0; Type: QDOVA003AA; Serial: TP:2005
- Measurement SW: DASY52, Version 52.10 (3)

DASY Configuration for Volume scan/802.11ac mode ch.155/Volume Scan:

Date/Time: 2021-11-17, Test Laboratory: UL Korea, Ltd. Suwon Laboratory
Communication System: UID 0, IEEE 802.11a/n/ac 5 GHz Band (0); Frequency: 5775 MHz; Duty Cycle: 1:1; PMF: 1
Medium: HSL 3-6 GHz Medium parameters used: f = 5775 MHz; σ = 5.35 S/m; ε_r = 35.013; ρ = 1000 kg/m^3
Measurement Standard: DASY5 (IEEE/IEC/ANSI C63.19-2011)

- Probe: EX3DV4 - SN7314; ConvF(4.9, 4.9, 4.9) @ 5775 MHz; Calibrated: 2021-05-31
- Sensor-Surface: 1.4mm (Mechanical Surface Detection)
- Electronics: DAE4 Sn1343; Calibrated: 2021-08-23
- Phantom: ELI V6.0 (20deg probe tilt); Type: QD OVA 003 AA; Serial: 2013
- Measurement SW: DASY52, Version 52.10 (3)

Multi Band Result:
SAR(1 g) = 0.819 W/kg; SAR(10 g) = 0.296 W/kg
Maximum value of SAR (interpolated) = 3.46 W/kg

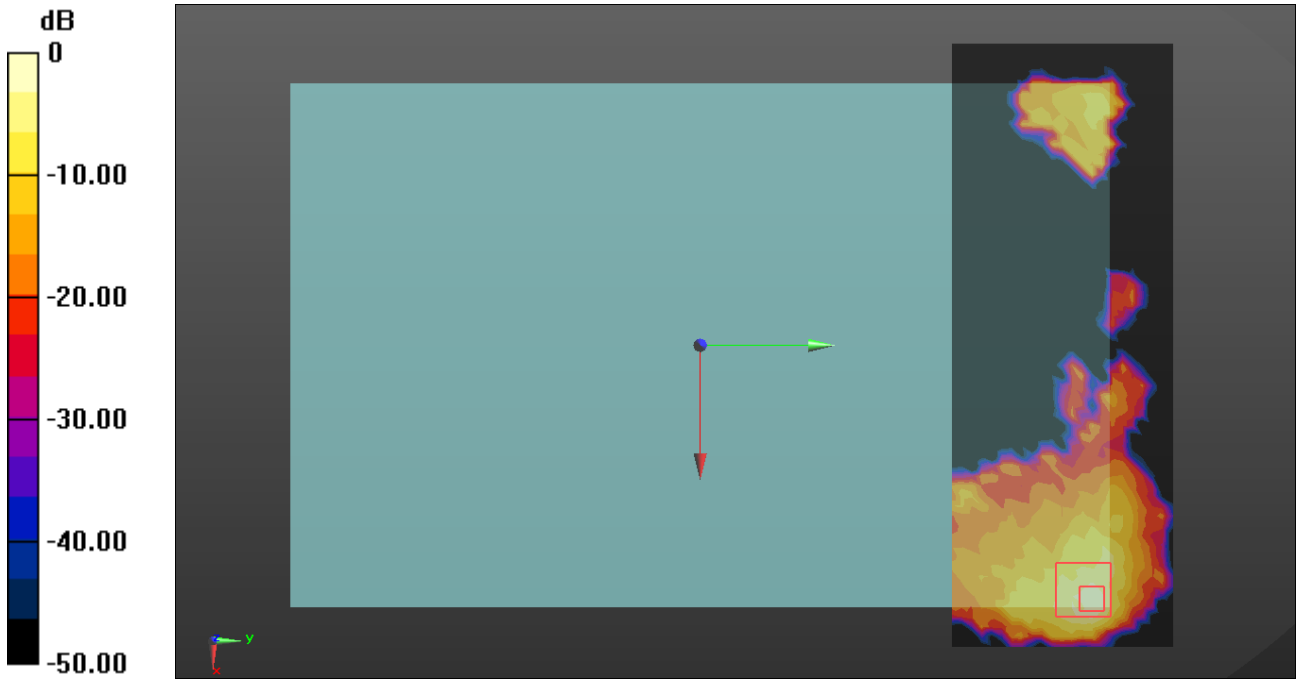

0 dB = 3.46 W/kg = 5.39 dBW/kg

GSM 1900 + Bluetooth Ant1

Multi-Band Average SAR
Multi-Band Configurations:

DASY Configuration for Volume scan/GPRS 2 slots ch.661/Volume Scan:

Date/Time: 2021-11-15, Test Laboratory: UL Korea, Ltd. Suwon Laboratory
Communication System: UID 0, GPRS-FDD (TDMA, GMSK, 2 slot) (0); Frequency: 1880 MHz; Duty Cycle: 1:4.00037; PMF: 1
Medium: HSL1900 Medium parameters used: f = 1880 MHz; σ = 1.439 S/m; ε_r = 41.131; ρ = 1000 kg/m^3
Measurement Standard: DASY5 (IEEE/IEC/ANSI C63.19-2011)

- Probe: EX3DV4 - SN7645; ConvF(8.9, 8.9, 8.9) @ 1880 MHz; Calibrated: 2021-04-15
- Sensor-Surface: 1.4mm (Mechanical Surface Detection)
- Electronics: DAE4 Sn1468; Calibrated: 2021-09-27
- Phantom: ELI v6.0; Type: QDOVA003AA; Serial: TP:2005
- Measurement SW: DASY52, Version 52.10 (3)

DASY Configuration for Volume scan/GFSK ch.39/Volume Scan:

Date/Time: 2021-11-12, Test Laboratory: UL Korea, Ltd. Suwon Laboratory
Communication System: UID 0, Bluetooth (DH5) (0); Frequency: 2441 MHz; Duty Cycle: 1:1.29033; PMF: 1
Medium: HSL 2450 Medium parameters used (interpolated): f = 2441 MHz; σ = 1.836 S/m; ε_r = 39.761; ρ = 1000 kg/m^3
Measurement Standard: DASY5 (IEEE/IEC/ANSI C63.19-2011)

- Probe: EX3DV4 - SN7645; ConvF(8.26, 8.26, 8.26) @ 2441 MHz; Calibrated: 2021-04-15
- Sensor-Surface: 1.4mm (Mechanical Surface Detection)
- Electronics: DAE4 Sn1468; Calibrated: 2021-09-27
- Phantom: ELI v6.0; Type: QDOVA003AA; Serial: TP:2005
- Measurement SW: DASY52, Version 52.10 (4)

Multi Band Result:
SAR(1 g) = 0.456 W/kg; SAR(10 g) = 0.255 W/kg
Maximum value of SAR (interpolated) = 0.921 W/kg

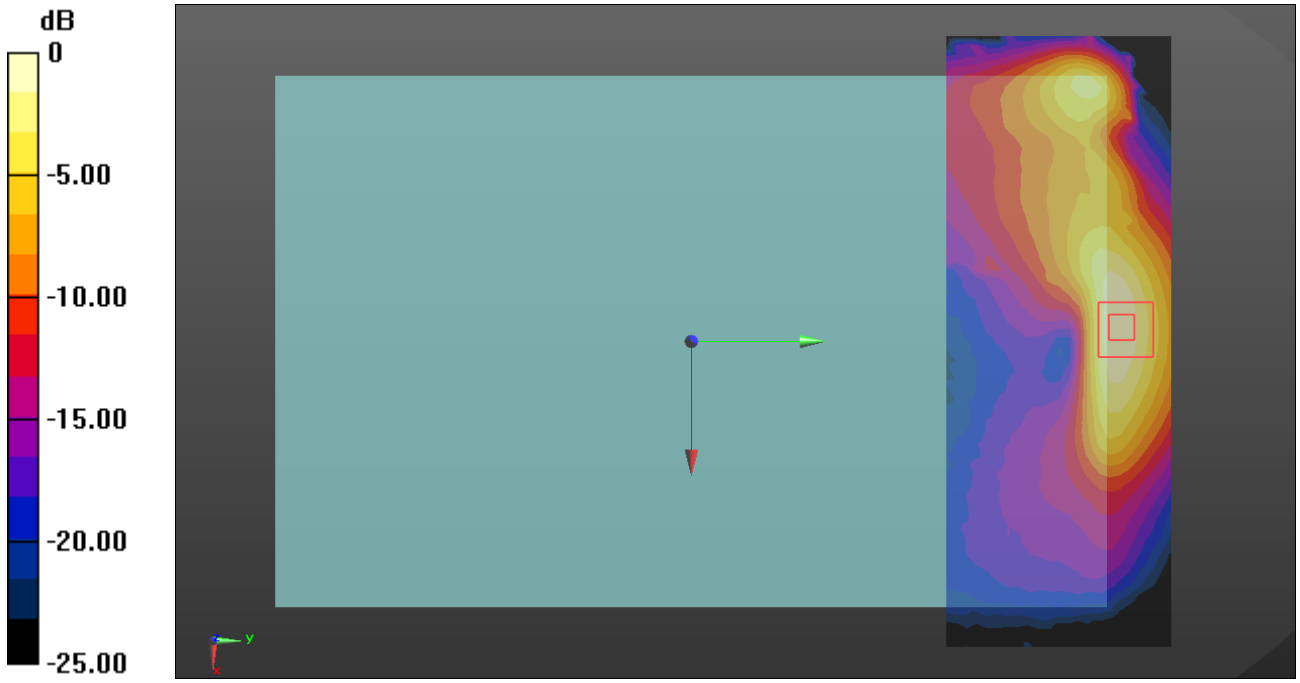

0 dB = 0.921 W/kg = -0.36 dBW/kg

WCDMA 2 + Bluetooth Ant1

Multi-Band Average SAR
Multi-Band Configurations:

DASY Configuration for Volume scan/Rel.99 ch.9400/Volume Scan:

Date/Time: 2021-11-14, Test Laboratory: UL Korea, Ltd. Suwon Laboratory
Communication System: UID 0, UMTS-FDD (WCDMA) (0); Frequency: 1880 MHz; Duty Cycle: 1:1; PMF: 1
Medium: HSL1900 Medium parameters used: f = 1880 MHz; σ = 1.439 S/m; ε_r = 41.131; ρ = 1000 kg/m^3
Measurement Standard: DASY5 (IEEE/IEC/ANSI C63.19-2011)

- Probe: EX3DV4 - SN7645; ConvF(8.9, 8.9, 8.9) @ 1880 MHz; Calibrated: 2021-04-15
- Sensor-Surface: 1.4mm (Mechanical Surface Detection)
- Electronics: DAE4 Sn1468; Calibrated: 2021-09-27
- Phantom: ELI v6.0; Type: QDOVA003AA; Serial: TP:2005
- Measurement SW: DASY52, Version 52.10 (3)

DASY Configuration for Volume scan/GFSK ch.39/Volume Scan:

Date/Time: 2021-11-12, Test Laboratory: UL Korea, Ltd. Suwon Laboratory
Communication System: UID 0, Bluetooth (DH5) (0); Frequency: 2441 MHz; Duty Cycle: 1:1.29033; PMF: 1
Medium: HSL 2450 Medium parameters used (interpolated): f = 2441 MHz; σ = 1.836 S/m; ε_r = 39.761; ρ = 1000 kg/m^3
Measurement Standard: DASY5 (IEEE/IEC/ANSI C63.19-2011)

- Probe: EX3DV4 - SN7645; ConvF(8.26, 8.26, 8.26) @ 2441 MHz; Calibrated: 2021-04-15
- Sensor-Surface: 1.4mm (Mechanical Surface Detection)
- Electronics: DAE4 Sn1468; Calibrated: 2021-09-27
- Phantom: ELI v6.0; Type: QDOVA003AA; Serial: TP:2005
- Measurement SW: DASY52, Version 52.10 (4)

Multi Band Result:
SAR(1 g) = 0.645 W/kg; SAR(10 g) = 0.276 W/kg
Maximum value of SAR (interpolated) = 1.70 W/kg

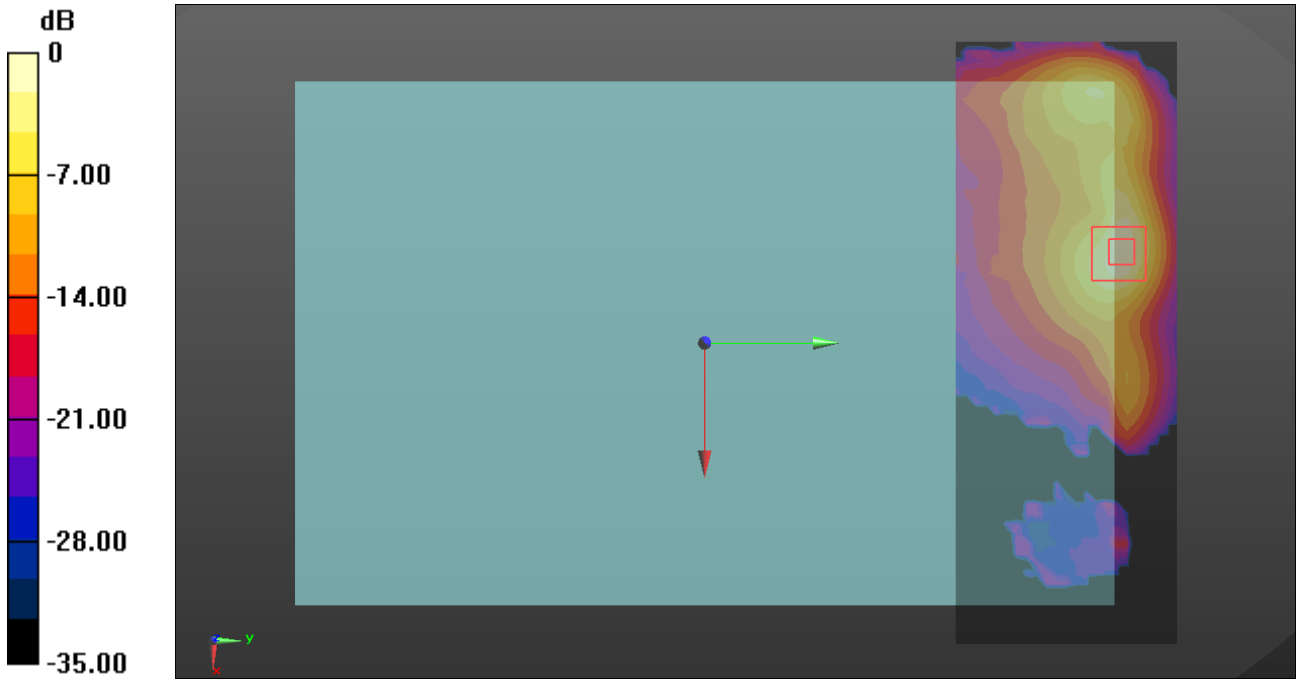

0 dB = 1.70 W/kg = 2.30 dBW/kg

WCDMA 2 + DTS MIMO

Multi-Band Average SAR
Multi-Band Configurations:

DASY Configuration for Volume scan/Rel.99 ch.9400/Volume Scan:

Date/Time: 11/14/2021, Test Laboratory: UL Korea, Ltd. Suwon Laboratory
Communication System: UID 0, UMTS-FDD (WCDMA) (0); Frequency: 1880 MHz; Duty Cycle: 1:1; PMF: 1
Medium: HSL1900 Medium parameters used: f = 1880 MHz; σ = 1.439 S/m; ε_r = 41.131; ρ = 1000 kg/m^3
Measurement Standard: DASY5 (IEEE/IEC/ANSI C63.19-2011)

- Probe: EX3DV4 - SN7645; ConvF(8.9, 8.9, 8.9) @ 1880 MHz; Calibrated: 4/15/2021
- Sensor-Surface: 1.4mm (Mechanical Surface Detection)
- Electronics: DAE4 Sn1468; Calibrated: 9/27/2021
- Phantom: ELI v6.0; Type: QDOVA003AA; Serial: TP:2005
- Measurement SW: DASY52, Version 52.10 (3)

DASY Configuration for Volume scan/802.11b mode ch.1 MIMO/Volume Scan:

Date/Time: 11/13/2021, Test Laboratory: UL Korea, Ltd. Suwon Laboratory
Communication System: UID 0, IEEE 802.11b/g/n 2.4 GHz Band (0); Frequency: 2412 MHz; Duty Cycle: 1:1; PMF: 1
Medium: HSL 2450 Medium parameters used (interpolated): f = 2412 MHz; σ = 1.814 S/m; ε_r = 39.822; ρ = 1000 kg/m^3
Measurement Standard: DASY5 (IEEE/IEC/ANSI C63.19-2011)

- Probe: EX3DV4 - SN7645; ConvF(8.26, 8.26, 8.26) @ 2412 MHz; Calibrated: 4/15/2021
- Sensor-Surface: 1.4mm (Mechanical Surface Detection)
- Electronics: DAE4 Sn1468; Calibrated: 9/27/2021
- Phantom: ELI v6.0; Type: QDOVA003AA; Serial: TP:2005
- Measurement SW: DASY52, Version 52.10 (3)

Multi Band Result:
SAR(1 g) = 0.657 W/kg; SAR(10 g) = 0.280 W/kg
Maximum value of SAR (interpolated) = 1.74 W/kg

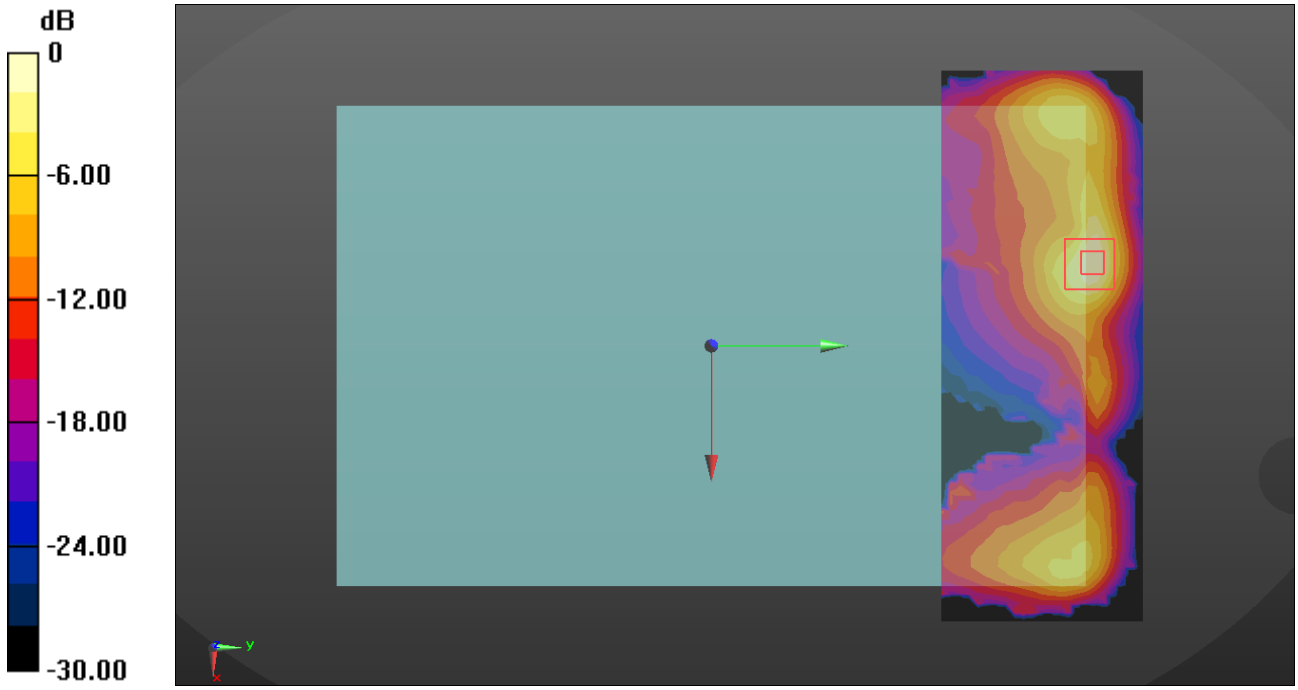

0 dB = 1.74 W/kg = 2.41 dBW/kg

WCDMA 4 + Bluetooth Ant1

Multi-Band Average SAR
Multi-Band Configurations:

DASY Configuration for Volume scan/GFSK ch.39/Volume Scan:

Date/Time: 2021-11-12, Test Laboratory: UL Korea, Ltd. Suwon Laboratory
Communication System: UID 0, Bluetooth (DH5) (0); Frequency: 2441 MHz; Duty Cycle: 1:1.29033; PMF: 1
Medium: HSL 2450 Medium parameters used (interpolated): f = 2441 MHz; σ = 1.836 S/m; ε_r = 39.761; ρ = 1000 kg/m^3
Measurement Standard: DASY5 (IEEE/IEC/ANSI C63.19-2011)

- Probe: EX3DV4 - SN7645; ConvF(8.26, 8.26, 8.26) @ 2441 MHz; Calibrated: 2021-04-15
- Sensor-Surface: 1.4mm (Mechanical Surface Detection)
- Electronics: DAE4 Sn1468; Calibrated: 2021-09-27
- Phantom: ELI v6.0; Type: QDOVA003AA; Serial: TP:2005
- Measurement SW: DASY52, Version 52.10 (4)

DASY Configuration for Volume scan/Rel.99 ch.1413/Volume Scan:

Date/Time: 2021-11-15, Test Laboratory: UL Korea, Ltd. Suwon Laboratory
Communication System: UID 0, UMTS-FDD (WCDMA) (0); Frequency: 1732.6 MHz; Duty Cycle: 1:1; PMF: 1
Medium: HSL 1700 Medium parameters used (interpolated): f = 1732.6 MHz; σ = 1.376 S/m; ε_r = 41.395; ρ = 1000 kg/m^3
Measurement Standard: DASY5 (IEEE/IEC/ANSI C63.19-2011)

- Probe: EX3DV4 - SN7645; ConvF(9.3, 9.3, 9.3) @ 1732.6 MHz; Calibrated: 2021-04-15
- Sensor-Surface: 1.4mm (Mechanical Surface Detection)
- Electronics: DAE4 Sn1468; Calibrated: 2021-09-27
- Phantom: ELI v6.0; Type: QDOVA003AA; Serial: TP:2005
- Measurement SW: DASY52, Version 52.10 (3)

Multi Band Result:
SAR(1 g) = 0.573 W/kg; SAR(10 g) = 0.245 W/kg
Maximum value of SAR (interpolated) = 1.62 W/kg

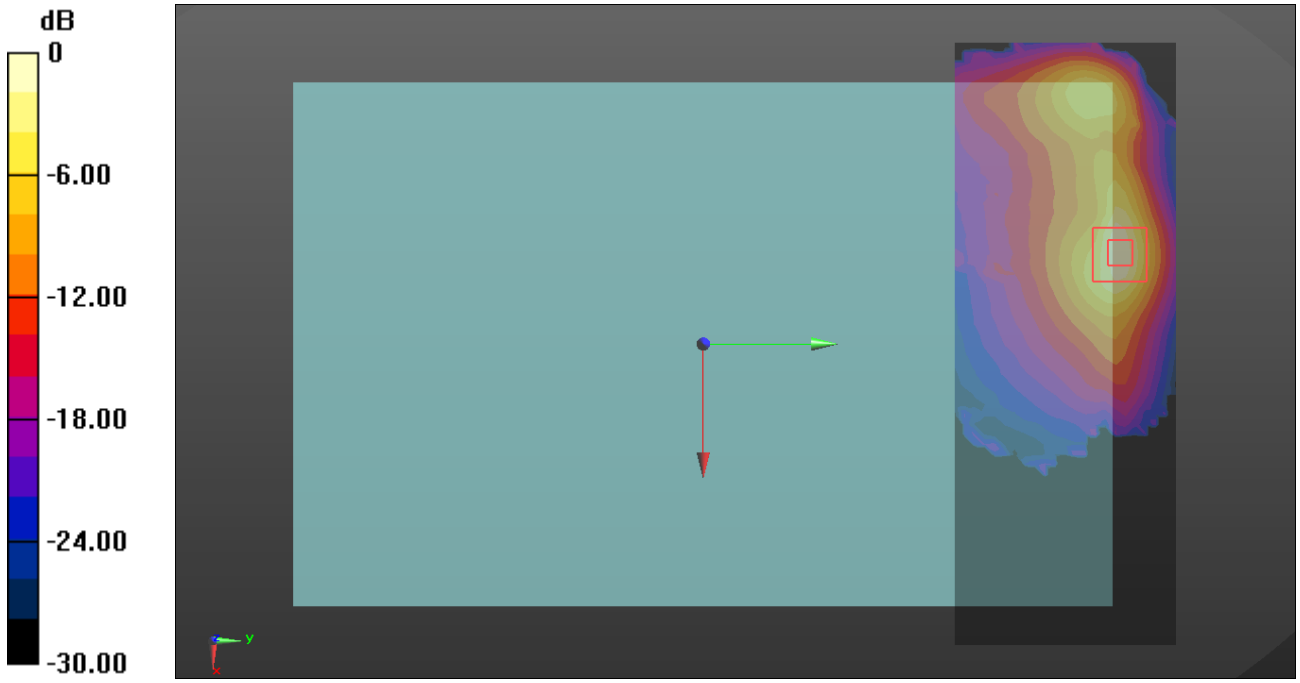

0 dB = 1.62 W/kg = 2.10 dBW/kg

WCDMA 4 + DTS MIMO

Multi-Band Average SAR
Multi-Band Configurations:

DASY Configuration for Volume scan/Rel.99 ch.1413/Volume Scan:

Date/Time: 11/15/2021, Test Laboratory: UL Korea, Ltd. Suwon Laboratory
Communication System: UID 0, UMTS-FDD (WCDMA) (0); Frequency: 1732.6 MHz; Duty Cycle: 1:1; PMF: 1
Medium: HSL 1700 Medium parameters used (interpolated): f = 1732.6 MHz; σ = 1.376 S/m; ε_r = 41.395; ρ = 1000 kg/m^3
Measurement Standard: DASY5 (IEEE/IEC/ANSI C63.19-2011)

- Probe: EX3DV4 - SN7645; ConvF(9.3, 9.3, 9.3) @ 1732.6 MHz; Calibrated: 4/15/2021
- Sensor-Surface: 1.4mm (Mechanical Surface Detection)
- Electronics: DAE4 Sn1468; Calibrated: 9/27/2021
- Phantom: ELI v6.0; Type: QDOVA003AA; Serial: TP:2005
- Measurement SW: DASY52, Version 52.10 (3)

DASY Configuration for Volume scan/802.11b mode ch.1 MIMO/Volume Scan:

Date/Time: 11/13/2021, Test Laboratory: UL Korea, Ltd. Suwon Laboratory
Communication System: UID 0, IEEE 802.11b/g/n 2.4 GHz Band (0); Frequency: 2412 MHz; Duty Cycle: 1:1; PMF: 1
Medium: HSL 2450 Medium parameters used (interpolated): f = 2412 MHz; σ = 1.814 S/m; ε_r = 39.822; ρ = 1000 kg/m^3
Measurement Standard: DASY5 (IEEE/IEC/ANSI C63.19-2011)

- Probe: EX3DV4 - SN7645; ConvF(8.26, 8.26, 8.26) @ 2412 MHz; Calibrated: 4/15/2021
- Sensor-Surface: 1.4mm (Mechanical Surface Detection)
- Electronics: DAE4 Sn1468; Calibrated: 9/27/2021
- Phantom: ELI v6.0; Type: QDOVA003AA; Serial: TP:2005
- Measurement SW: DASY52, Version 52.10 (3)

Multi Band Result:
SAR(1 g) = 0.583 W/kg; SAR(10 g) = 0.248 W/kg
Maximum value of SAR (interpolated) = 1.65 W/kg

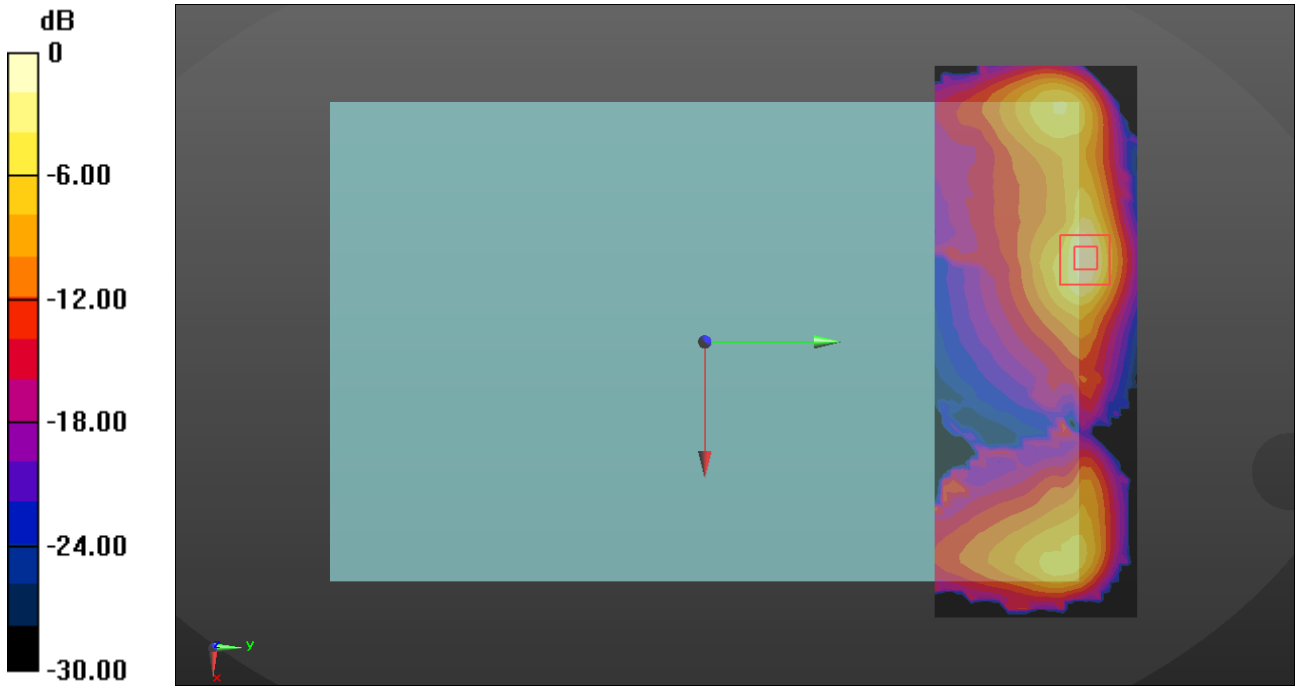

0 dB = 1.65 W/kg = 2.17 dBW/kg

WCDMA 5 + Bluetooth Ant1

Multi-Band Average SAR
Multi-Band Configurations:

DASY Configuration for Volume Scan/Rel.99 ch.4183/Volume Scan:

Date/Time: 2021-11-15, Test Laboratory: UL Korea, Ltd. Suwon Laboratory
Communication System: UID 0, UMTS-FDD (WCDMA) (0); Frequency: 836.6 MHz; Duty Cycle: 1:1; PMF: 1
Medium: HSL835 Medium parameters used (interpolated): f = 836.6 MHz; σ = 0.943 S/m; ε_r = 41.745; ρ = 1000 kg/m^3
Measurement Standard: DASY5 (IEEE/IEC/ANSI C63.19-2007)

- Probe: EX3DV4 - SN7330; ConvF(10.8, 10.8, 10.8) @ 836.6 MHz; Calibrated: 2021-09-29
- Sensor-Surface: 1.4mm (Mechanical Surface Detection)
- Electronics: DAE4 Sn1591; Calibrated: 2021-03-26
- Phantom: ELI V6.0 (20deg probe tilt) (Left); Type: QD OVA 003 AA; Serial: 2111
- Measurement SW: DASY52, Version 52.10 (3)

DASY Configuration for Volume scan/GFSK ch.39/Volume Scan:

Date/Time: 2021-11-12, Test Laboratory: UL Korea, Ltd. Suwon Laboratory
Communication System: UID 0, Bluetooth (DH5) (0); Frequency: 2441 MHz; Duty Cycle: 1:1.29033; PMF: 1
Medium: HSL 2450 Medium parameters used (interpolated): f = 2441 MHz; σ = 1.836 S/m; ε_r = 39.761; ρ = 1000 kg/m^3
Measurement Standard: DASY5 (IEEE/IEC/ANSI C63.19-2011)

- Probe: EX3DV4 - SN7645; ConvF(8.26, 8.26, 8.26) @ 2441 MHz; Calibrated: 2021-04-15
- Sensor-Surface: 1.4mm (Mechanical Surface Detection)
- Electronics: DAE4 Sn1468; Calibrated: 2021-09-27
- Phantom: ELI v6.0; Type: QDOVA003AA; Serial: TP:2005
- Measurement SW: DASY52, Version 52.10 (4)

Multi Band Result:
SAR(1 g) = 0.845 W/kg; SAR(10 g) = 0.409 W/kg
Maximum value of SAR (interpolated) = 2.16 W/kg

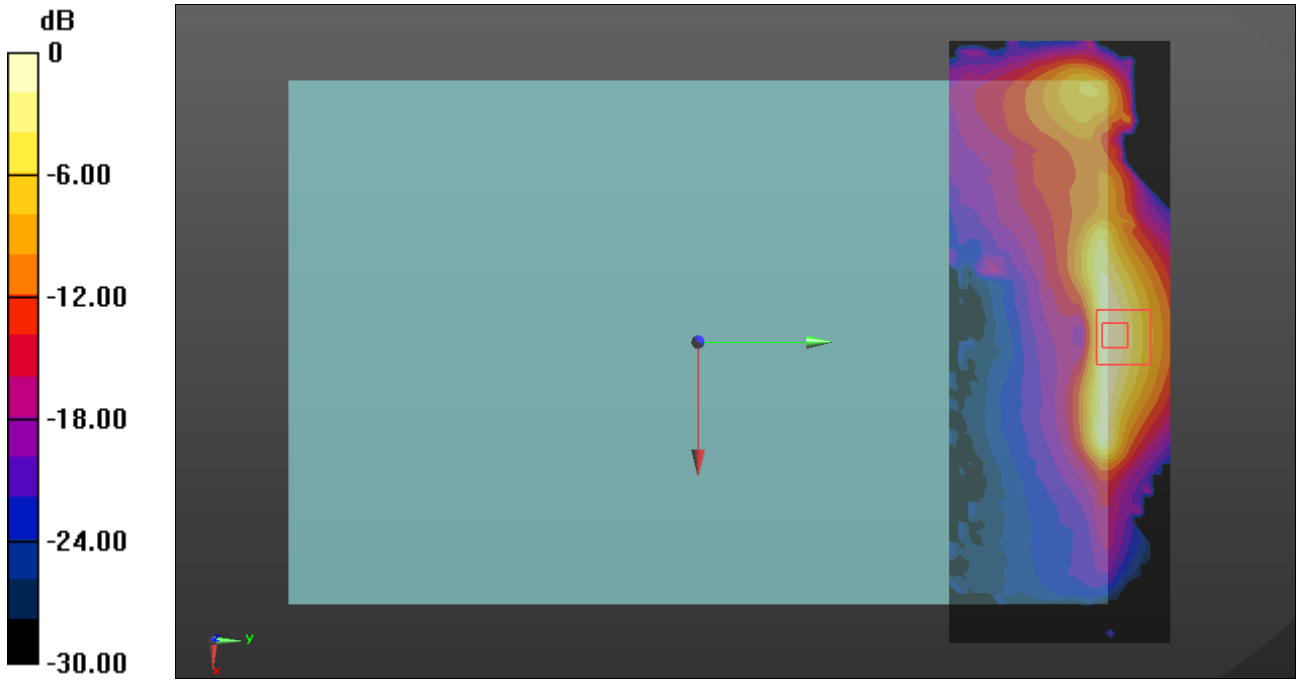

0 dB = 2.16 W/kg = 3.34 dBW/kg

WCDMA 5 + DTS Ant1

Multi-Band Average SAR
Multi-Band Configurations:

DASY Configuration for Volume Scan/Rel.99 ch.4183/Volume Scan:

Date/Time: 2021-11-15, Test Laboratory: UL Korea, Ltd. Suwon Laboratory
Communication System: UID 0, UMTS-FDD (WCDMA) (0); Frequency: 836.6 MHz; Duty Cycle: 1:1; PMF: 1
Medium: HSL835 Medium parameters used (interpolated): f = 836.6 MHz; σ = 0.943 S/m; ε_r = 41.745; ρ = 1000 kg/m^3
Measurement Standard: DASY5 (IEEE/IEC/ANSI C63.19-2007)

- Probe: EX3DV4 - SN7330; ConvF(10.8, 10.8, 10.8) @ 836.6 MHz; Calibrated: 2021-09-29
- Sensor-Surface: 1.4mm (Mechanical Surface Detection)
- Electronics: DAE4 Sn1591; Calibrated: 2021-03-26
- Phantom: ELI V6.0 (20deg probe tilt) (Left); Type: QD OVA 003 AA; Serial: 2111
- Measurement SW: DASY52, Version 52.10 (3)

DASY Configuration for Volume scan/802.11b mode ch.6 SISO Ant 1/Volume Scan:

Date/Time: 2021-11-17, Test Laboratory: UL Korea, Ltd. Suwon Laboratory
Communication System: UID 0, IEEE 802.11b/g/n 2.4 GHz Band (0); Frequency: 2437 MHz; Duty Cycle: 1:1; PMF: 1
Medium: HSL 2450 Medium parameters used (interpolated): f = 2437 MHz; σ = 1.788 S/m; ε_r = 38.425; ρ = 1000 kg/m^3
Measurement Standard: DASY5 (IEEE/IEC/ANSI C63.19-2011)

- Probe: EX3DV4 - SN7314; ConvF(7.47, 7.47, 7.47) @ 2437 MHz; Calibrated: 2021-05-31
- Sensor-Surface: 1.4mm (Mechanical Surface Detection)
- Electronics: DAE4 Sn1343; Calibrated: 2021-08-23
- Phantom: ELI V6.0 (20deg probe tilt); Type: QD OVA 003 AA; Serial: 2013
- Measurement SW: DASY52, Version 52.10 (3)

Multi Band Result:
SAR(1 g) = 0.845 W/kg; SAR(10 g) = 0.409 W/kg
Maximum value of SAR (interpolated) = 2.16 W/kg

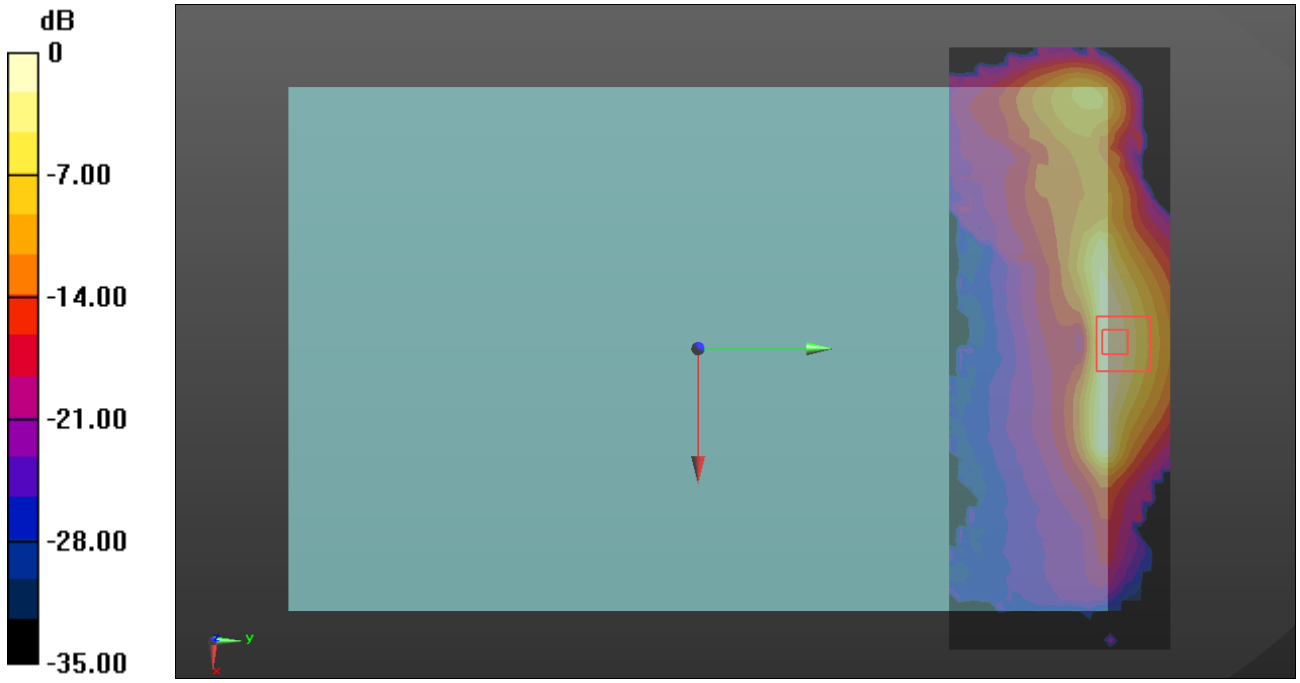

0 dB = 2.16 W/kg = 3.34 dBW/kg

WCDMA 5 + DTS MIMO

Multi-Band Average SAR
Multi-Band Configurations:

DASY Configuration for Volume Scan/Rel.99 ch.4183/Volume Scan:

Date/Time: 2021-11-15, Test Laboratory: UL Korea, Ltd. Suwon Laboratory
Communication System: UID 0, UMTS-FDD (WCDMA) (0); Frequency: 836.6 MHz; Duty Cycle: 1:1; PMF: 1
Medium: HSL835 Medium parameters used (interpolated): f = 836.6 MHz; σ = 0.943 S/m; ε_r = 41.745; ρ = 1000 kg/m^3
Measurement Standard: DASY5 (IEEE/IEC/ANSI C63.19-2007)

- Probe: EX3DV4 - SN7330; ConvF(10.8, 10.8, 10.8) @ 836.6 MHz; Calibrated: 2021-09-29
- Sensor-Surface: 1.4mm (Mechanical Surface Detection)
- Electronics: DAE4 Sn1591; Calibrated: 2021-03-26
- Phantom: ELI V6.0 (20deg probe tilt) (Left); Type: QD OVA 003 AA; Serial: 2111
- Measurement SW: DASY52, Version 52.10 (3)

DASY Configuration for Volume scan/802.11b mode ch.1 MIMO/Volume Scan:

Date/Time: 2021-11-13, Test Laboratory: UL Korea, Ltd. Suwon Laboratory
Communication System: UID 0, IEEE 802.11b/g/n 2.4 GHz Band (0); Frequency: 2412 MHz; Duty Cycle: 1:1; PMF: 1
Medium: HSL 2450 Medium parameters used (interpolated): f = 2412 MHz; σ = 1.814 S/m; ε_r = 39.822; ρ = 1000 kg/m^3
Measurement Standard: DASY5 (IEEE/IEC/ANSI C63.19-2011)

- Probe: EX3DV4 - SN7645; ConvF(8.26, 8.26, 8.26) @ 2412 MHz; Calibrated: 2021-04-15
- Sensor-Surface: 1.4mm (Mechanical Surface Detection)
- Electronics: DAE4 Sn1468; Calibrated: 2021-09-27
- Phantom: ELI v6.0; Type: QDOVA003AA; Serial: TP:2005
- Measurement SW: DASY52, Version 52.10 (3)

Multi Band Result:
SAR(1 g) = 0.856 W/kg; SAR(10 g) = 0.410 W/kg
Maximum value of SAR (interpolated) = 2.21 W/kg

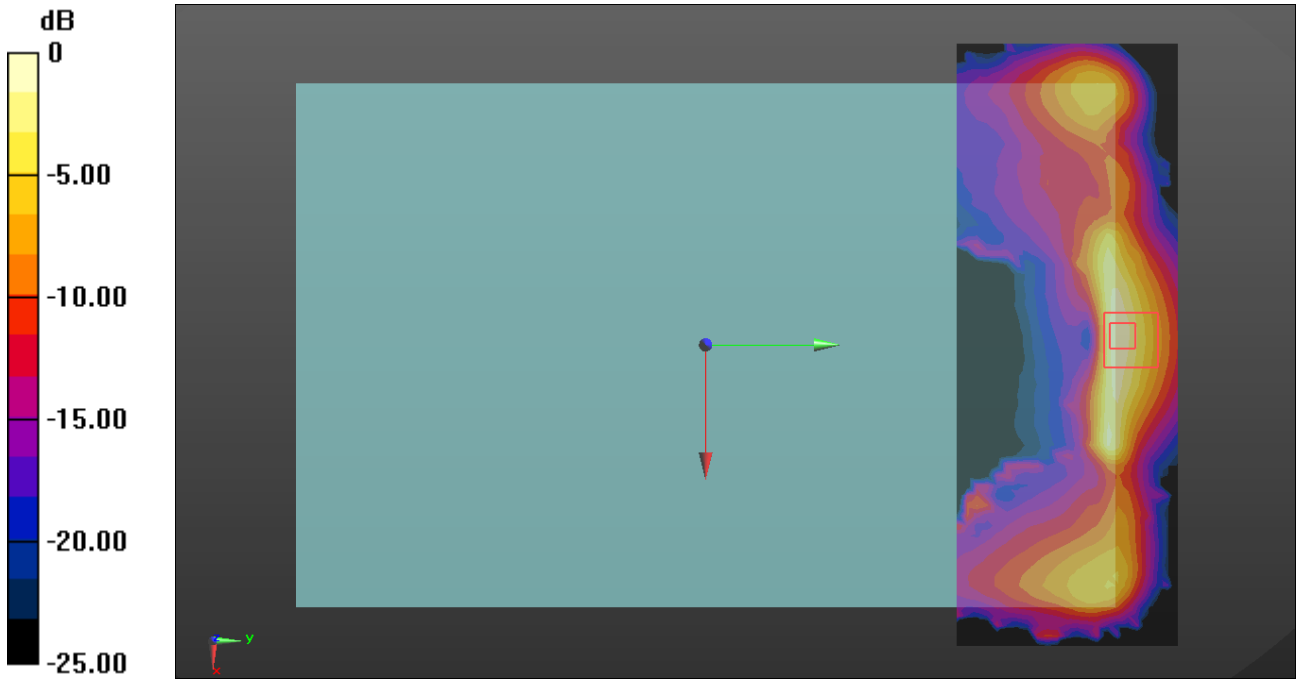

0 dB = 2.21 W/kg = 3.44 dBW/kg

LTE Band 12 + Bluetooth Ant 1

Multi-Band Average SAR
Multi-Band Configurations:

DASY Configuration for Volume scan/QPSK RB 25/12 ch.23095/Volume Scan:

Date/Time: 2021-11-12, Test Laboratory: UL Korea, Ltd. Suwon Laboratory
Communication System: UID 0, LTE (FDD) (0); Frequency: 707.5 MHz; Duty Cycle: 1:1; PMF: 1
Medium: HSL 750 Medium parameters used (interpolated): f = 707.5 MHz; σ = 0.899 S/m; ε_r = 42.223; ρ = 1000 kg/m^3
Measurement Standard: DASY5 (IEEE/IEC/ANSI C63.19-2011)

- Probe: EX3DV4 - SN7314; ConvF(9.6, 9.6, 9.6) @ 707.5 MHz; Calibrated: 2021-05-31
- Sensor-Surface: 1.4mm (Mechanical Surface Detection)
- Electronics: DAE4 Sn1343; Calibrated: 2021-08-23
- Phantom: ELI V6.0 (20deg probe tilt); Type: QD OVA 003 AA; Serial: 2013
- Measurement SW: DASY52, Version 52.10 (3)

DASY Configuration for Volume scan/GFSK ch.39/Volume Scan:

Date/Time: 2021-11-12, Test Laboratory: UL Korea, Ltd. Suwon Laboratory
Communication System: UID 0, Bluetooth (DH5) (0); Frequency: 2441 MHz; Duty Cycle: 1:1.29033; PMF: 1
Medium: HSL 2450 Medium parameters used (interpolated): f = 2441 MHz; σ = 1.836 S/m; ε_r = 39.761; ρ = 1000 kg/m^3
Measurement Standard: DASY5 (IEEE/IEC/ANSI C63.19-2011)

- Probe: EX3DV4 - SN7645; ConvF(8.26, 8.26, 8.26) @ 2441 MHz; Calibrated: 2021-04-15
- Sensor-Surface: 1.4mm (Mechanical Surface Detection)
- Electronics: DAE4 Sn1468; Calibrated: 2021-09-27
- Phantom: ELI v6.0; Type: QDOVA003AA; Serial: TP:2005
- Measurement SW: DASY52, Version 52.10 (4)

Multi Band Result:
SAR(1 g) = 0.522 W/kg; SAR(10 g) = 0.253 W/kg
Maximum value of SAR (interpolated) = 1.28 W/kg

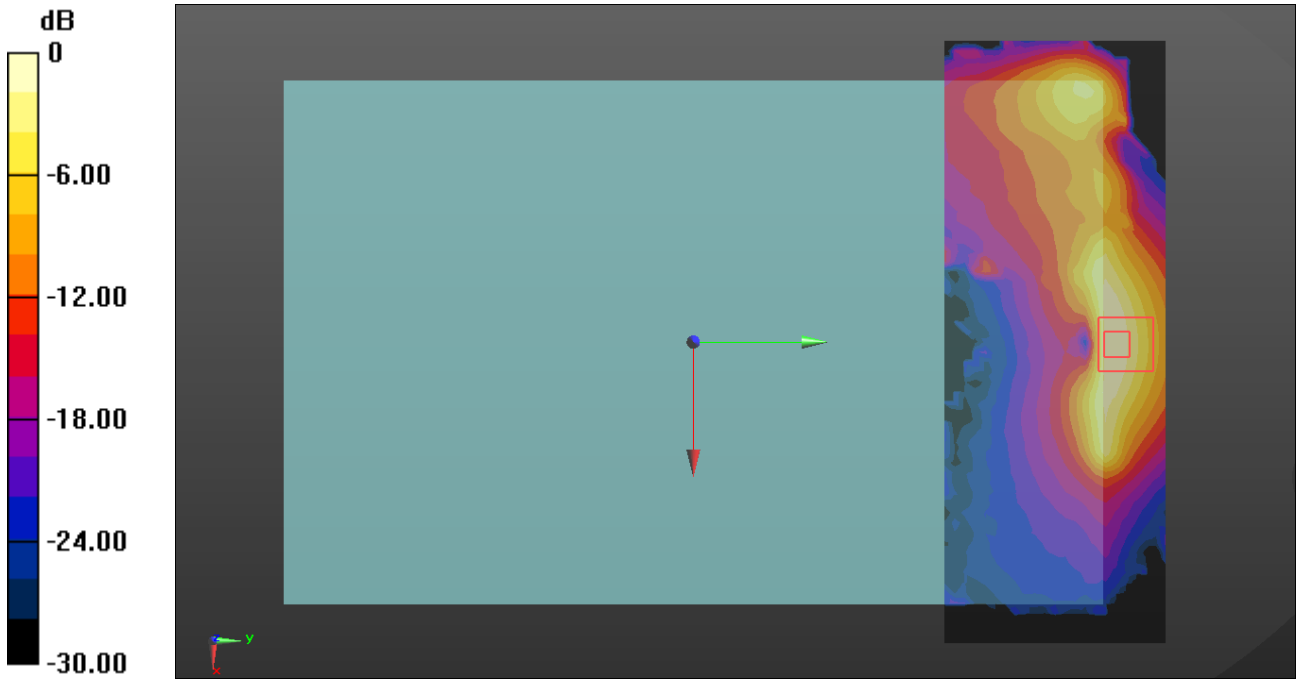

0 dB = 1.28 W/kg = 1.07 dBW/kg

LTE Band 12 + DTS Ant1

Multi-Band Average SAR
Multi-Band Configurations:

DASY Configuration for Volume scan/QPSK RB 25/12 ch.23095/Volume Scan:

Date/Time: 2021-11-12, Test Laboratory: UL Korea, Ltd. Suwon Laboratory
Communication System: UID 0, LTE (FDD) (0); Frequency: 707.5 MHz; Duty Cycle: 1:1; PMF: 1
Medium: HSL 750 Medium parameters used (interpolated): f = 707.5 MHz; σ = 0.899 S/m; ε_r = 42.223; ρ = 1000 kg/m^3
Measurement Standard: DASY5 (IEEE/IEC/ANSI C63.19-2011)

- Probe: EX3DV4 - SN7314; ConvF(9.6, 9.6, 9.6) @ 707.5 MHz; Calibrated: 2021-05-31
- Sensor-Surface: 1.4mm (Mechanical Surface Detection)
- Electronics: DAE4 Sn1343; Calibrated: 2021-08-23
- Phantom: ELI V6.0 (20deg probe tilt); Type: QD OVA 003 AA; Serial: 2013
- Measurement SW: DASY52, Version 52.10 (3)

DASY Configuration for Volume scan/802.11b mode ch.6 SISO Ant 1/Volume Scan:

Date/Time: 2021-11-17, Test Laboratory: UL Korea, Ltd. Suwon Laboratory
Communication System: UID 0, IEEE 802.11b/g/n 2.4 GHz Band (0); Frequency: 2437 MHz; Duty Cycle: 1:1; PMF: 1
Medium: HSL 2450 Medium parameters used (interpolated): f = 2437 MHz; σ = 1.788 S/m; ε_r = 38.425; ρ = 1000 kg/m^3
Measurement Standard: DASY5 (IEEE/IEC/ANSI C63.19-2011)

- Probe: EX3DV4 - SN7314; ConvF(7.47, 7.47, 7.47) @ 2437 MHz; Calibrated: 2021-05-31
- Sensor-Surface: 1.4mm (Mechanical Surface Detection)
- Electronics: DAE4 Sn1343; Calibrated: 2021-08-23
- Phantom: ELI V6.0 (20deg probe tilt); Type: QD OVA 003 AA; Serial: 2013
- Measurement SW: DASY52, Version 52.10 (3)

Multi Band Result:
SAR(1 g) = 0.522 W/kg; SAR(10 g) = 0.253 W/kg
Maximum value of SAR (interpolated) = 1.28 W/kg

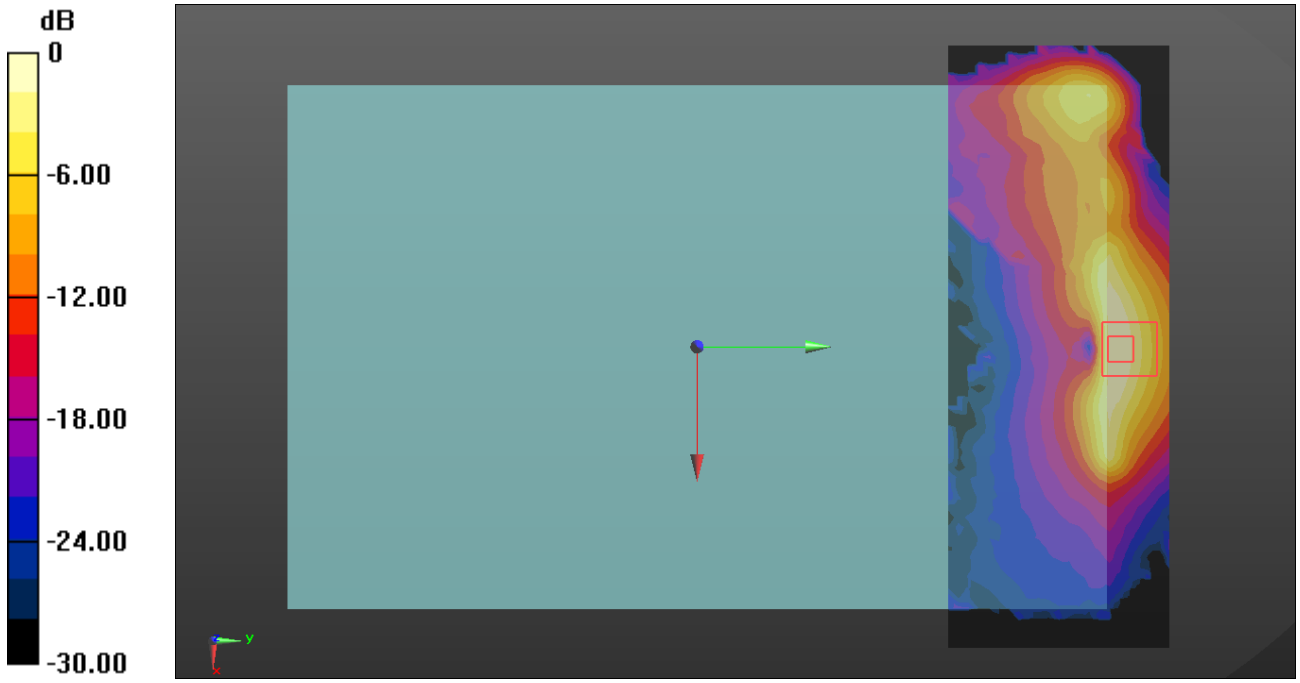

0 dB = 1.28 W/kg = 1.07 dBW/kg

LTE Band 12 +DTS MIMO

Multi-Band Average SAR
Multi-Band Configurations:

DASY Configuration for Volume scan/QPSK RB 25/12 ch.23095/Volume Scan:

Date/Time: 11/12/2021, Test Laboratory: UL Korea, Ltd. Suwon Laboratory
Communication System: UID 0, LTE (FDD) (0); Frequency: 707.5 MHz; Duty Cycle: 1:1; PMF: 1
Medium: HSL 750 Medium parameters used (interpolated): f = 707.5 MHz; σ = 0.899 S/m; ε_r = 42.223; ρ = 1000 kg/m^3
Measurement Standard: DASY5 (IEEE/IEC/ANSI C63.19-2011)

- Probe: EX3DV4 - SN7314; ConvF(9.6, 9.6, 9.6) @ 707.5 MHz; Calibrated: 5/31/2021
- Sensor-Surface: 1.4mm (Mechanical Surface Detection)
- Electronics: DAE4 Sn1343; Calibrated: 8/23/2021
- Phantom: ELI V6.0 (20deg probe tilt); Type: QD OVA 003 AA; Serial: 2013
- Measurement SW: DASY52, Version 52.10 (3)

DASY Configuration for Volume scan/802.11b mode ch.1 MIMO/Volume Scan:

Date/Time: 11/13/2021, Test Laboratory: UL Korea, Ltd. Suwon Laboratory
Communication System: UID 0, IEEE 802.11b/g/n 2.4 GHz Band (0); Frequency: 2412 MHz; Duty Cycle: 1:1; PMF: 1
Medium: HSL 2450 Medium parameters used (interpolated): f = 2412 MHz; σ = 1.814 S/m; ε_r = 39.822; ρ = 1000 kg/m^3
Measurement Standard: DASY5 (IEEE/IEC/ANSI C63.19-2011)

- Probe: EX3DV4 - SN7645; ConvF(8.26, 8.26, 8.26) @ 2412 MHz; Calibrated: 4/15/2021
- Sensor-Surface: 1.4mm (Mechanical Surface Detection)
- Electronics: DAE4 Sn1468; Calibrated: 9/27/2021
- Phantom: ELI v6.0; Type: QDOVA003AA; Serial: TP:2005
- Measurement SW: DASY52, Version 52.10 (3)

Multi Band Result:
SAR(1 g) = 0.528 W/kg; SAR(10 g) = 0.255 W/kg
Maximum value of SAR (interpolated) = 1.31 W/kg
\

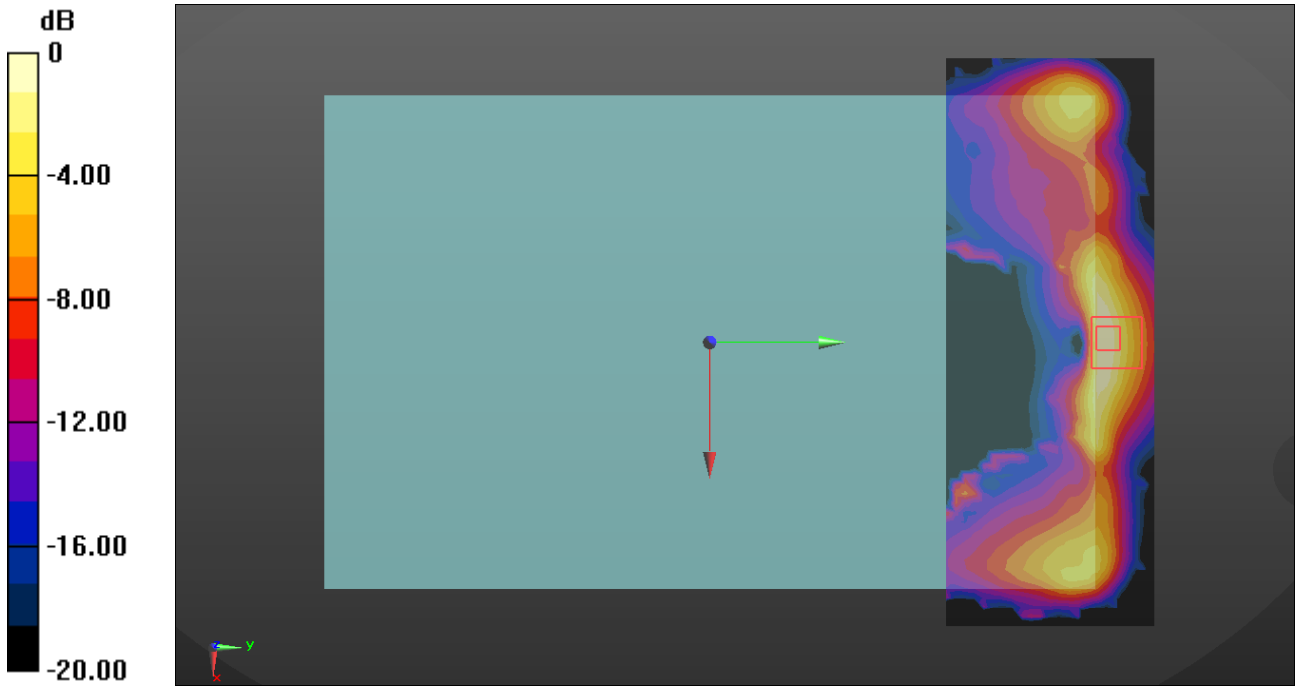

0 dB = 1.31 W/kg = 1.17 dBW/kg

LTE Band 13 + Bluetooth Ant 1

Multi-Band Average SAR
Multi-Band Configurations:

DASY Configuration for Volume scan/QPSK RB 1/25 ch.23230/Volume Scan:

Date/Time: 2021-11-13, Test Laboratory: UL Korea, Ltd. Suwon Laboratory
Communication System: UID 0, LTE (FDD) (0); Frequency: 831.5 MHz; Duty Cycle: 1:1; PMF: 1
Medium: HSL750 Medium parameters used (interpolated): f = 831.5 MHz; σ = 0.94 S/m; ε_r = 41.814; ρ = 1000 kg/m^3
Measurement Standard: DASY5 (IEEE/IEC/ANSI C63.19-2011)

- Probe: EX3DV4 - SN7314; ConvF(9.43, 9.43, 9.43) @ 831.5 MHz; Calibrated: 2021-05-31
- Sensor-Surface: 1.4mm (Mechanical Surface Detection)
- Electronics: DAE4 Sn1343; Calibrated: 2021-08-23
- Phantom: ELI V6.0 (20deg probe tilt); Type: QD OVA 003 AA; Serial: 2013
- Measurement SW: DASY52, Version 52.10 (3)

DASY Configuration for Volume scan/GFSK ch.39/Volume Scan:

Date/Time: 2021-11-12, Test Laboratory: UL Korea, Ltd. Suwon Laboratory
Communication System: UID 0, Bluetooth (DH5) (0); Frequency: 2441 MHz; Duty Cycle: 1:1.29033; PMF: 1
Medium: HSL 2450 Medium parameters used (interpolated): f = 2441 MHz; σ = 1.836 S/m; ε_r = 39.761; ρ = 1000 kg/m^3
Measurement Standard: DASY5 (IEEE/IEC/ANSI C63.19-2011)

- Probe: EX3DV4 - SN7645; ConvF(8.26, 8.26, 8.26) @ 2441 MHz; Calibrated: 2021-04-15
- Sensor-Surface: 1.4mm (Mechanical Surface Detection)
- Electronics: DAE4 Sn1468; Calibrated: 2021-09-27
- Phantom: ELI v6.0; Type: QDOVA003AA; Serial: TP:2005
- Measurement SW: DASY52, Version 52.10 (4)

Multi Band Result:
SAR(1 g) = 0.673 W/kg; SAR(10 g) = 0.433 W/kg
Maximum value of SAR (interpolated) = 1.08 W/kg

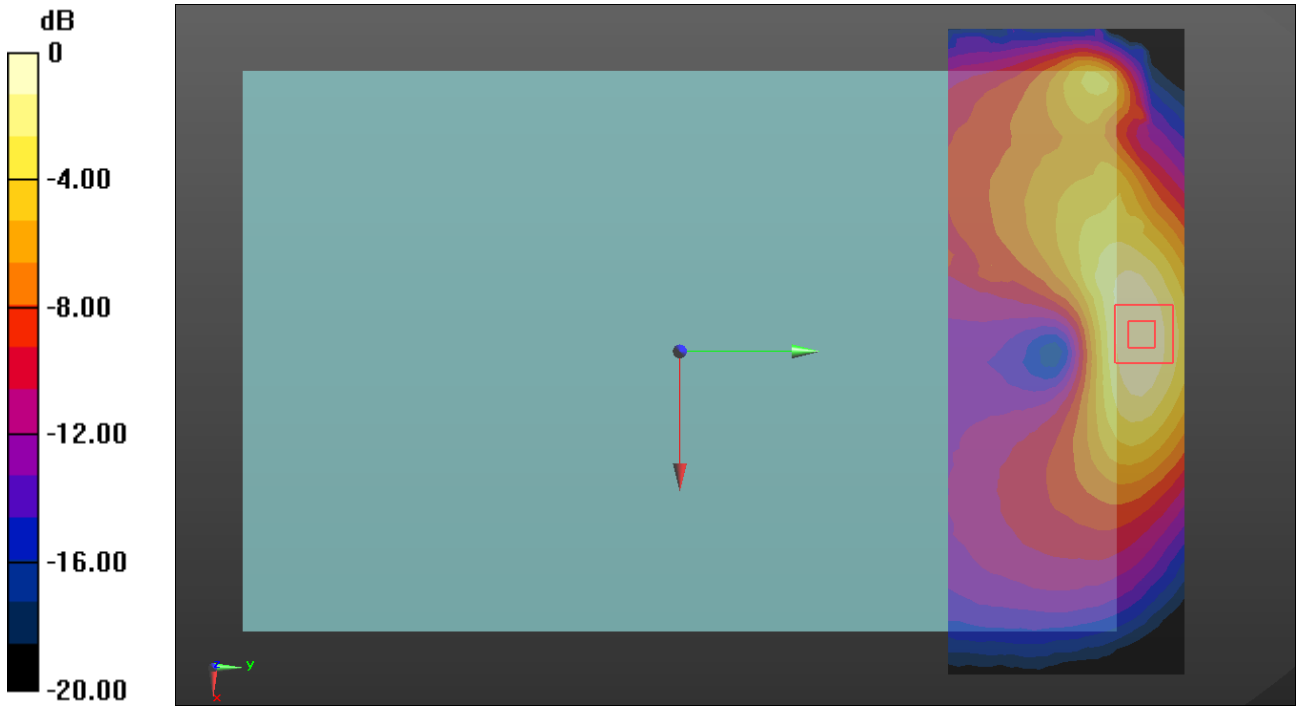

0 dB = 1.08 W/kg = 0.33 dBW/kg

LTE Band 13 + DTS Ant 1

Multi-Band Average SAR
Multi-Band Configurations:

DASY Configuration for Volume scan/QPSK RB 1/25 ch.23230/Volume Scan:

Date/Time: 2021-11-13, Test Laboratory: UL Korea, Ltd. Suwon Laboratory
Communication System: UID 0, LTE (FDD) (0); Frequency: 831.5 MHz; Duty Cycle: 1:1; PMF: 1
Medium: HSL750 Medium parameters used (interpolated): f = 831.5 MHz; σ = 0.94 S/m; ε_r = 41.814; ρ = 1000 kg/m^3
Measurement Standard: DASY5 (IEEE/IEC/ANSI C63.19-2011)

- Probe: EX3DV4 - SN7314; ConvF(9.43, 9.43, 9.43) @ 831.5 MHz; Calibrated: 2021-05-31
- Sensor-Surface: 1.4mm (Mechanical Surface Detection)
- Electronics: DAE4 Sn1343; Calibrated: 2021-08-23
- Phantom: ELI V6.0 (20deg probe tilt); Type: QD OVA 003 AA; Serial: 2013
- Measurement SW: DASY52, Version 52.10 (3)

DASY Configuration for Volume scan/802.11b mode ch.6 SISO Ant 1/Volume Scan:

Date/Time: 2021-11-17, Test Laboratory: UL Korea, Ltd. Suwon Laboratory
Communication System: UID 0, IEEE 802.11b/g/n 2.4 GHz Band (0); Frequency: 2437 MHz; Duty Cycle: 1:1; PMF: 1
Medium: HSL 2450 Medium parameters used (interpolated): f = 2437 MHz; σ = 1.788 S/m; ε_r = 38.425; ρ = 1000 kg/m^3
Measurement Standard: DASY5 (IEEE/IEC/ANSI C63.19-2011)

- Probe: EX3DV4 - SN7314; ConvF(7.47, 7.47, 7.47) @ 2437 MHz; Calibrated: 2021-05-31
- Sensor-Surface: 1.4mm (Mechanical Surface Detection)
- Electronics: DAE4 Sn1343; Calibrated: 2021-08-23
- Phantom: ELI V6.0 (20deg probe tilt); Type: QD OVA 003 AA; Serial: 2013
- Measurement SW: DASY52, Version 52.10 (3)

Multi Band Result:
SAR(1 g) = 0.673 W/kg; SAR(10 g) = 0.433 W/kg
Maximum value of SAR (interpolated) = 1.08 W/kg

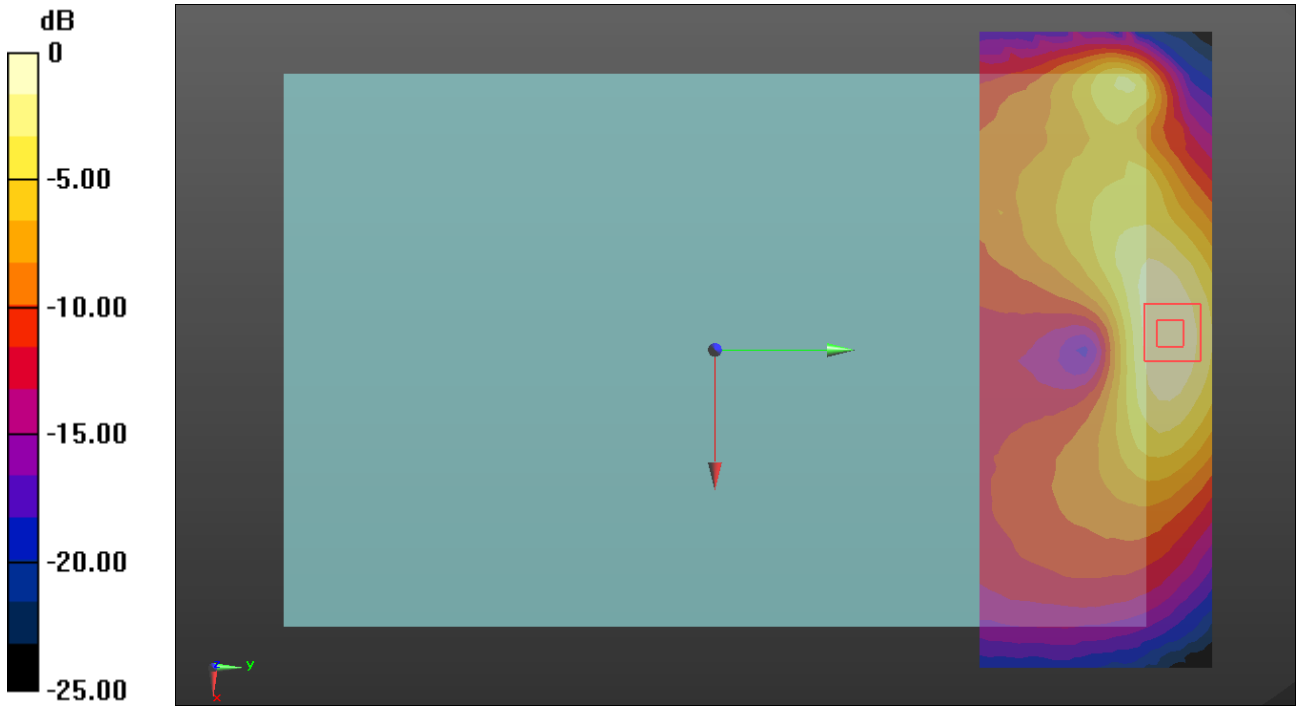

0 dB = 1.08 W/kg = 0.33 dBW/kg

LTE Band 13 + DTS MIMO

Multi-Band Average SAR
Multi-Band Configurations:

DASY Configuration for Volume scan/QPSK RB 1/25 ch.23230/Volume Scan:

Date/Time: 2021-11-13, Test Laboratory: UL Korea, Ltd. Suwon Laboratory
Communication System: UID 0, LTE (FDD) (0); Frequency: 831.5 MHz; Duty Cycle: 1:1; PMF: 1
Medium: HSL750 Medium parameters used (interpolated): f = 831.5 MHz; σ = 0.94 S/m; ε_r = 41.814; ρ = 1000 kg/m^3
Measurement Standard: DASY5 (IEEE/IEC/ANSI C63.19-2011)

- Probe: EX3DV4 - SN7314; ConvF(9.43, 9.43, 9.43) @ 831.5 MHz; Calibrated: 2021-05-31
- Sensor-Surface: 1.4mm (Mechanical Surface Detection)
- Electronics: DAE4 Sn1343; Calibrated: 2021-08-23
- Phantom: ELI V6.0 (20deg probe tilt); Type: QD OVA 003 AA; Serial: 2013
- Measurement SW: DASY52, Version 52.10 (3)

DASY Configuration for Volume scan/802.11b mode ch.1 MIMO/Volume Scan:

Date/Time: 2021-11-13 Test Laboratory: UL Korea, Ltd. Suwon Laboratory
Communication System: UID 0, IEEE 802.11b/g/n 2.4 GHz Band (0); Frequency: 2412 MHz; Duty Cycle: 1:1; PMF: 1
Medium: HSL 2450 Medium parameters used (interpolated): f = 2412 MHz; σ = 1.814 S/m; ε_r = 39.822; ρ = 1000 kg/m^3
Measurement Standard: DASY5 (IEEE/IEC/ANSI C63.19-2011)

- Probe: EX3DV4 - SN7645; ConvF(8.26, 8.26, 8.26) @ 2412 MHz; Calibrated: 2021-04-15
- Sensor-Surface: 1.4mm (Mechanical Surface Detection)
- Electronics: DAE4 Sn1468; Calibrated: 2021-09-27
- Phantom: ELI v6.0; Type: QDOVA003AA; Serial: TP:2005
- Measurement SW: DASY52, Version 52.10 (3)

Multi Band Result:
SAR(1 g) = 0.681 W/kg; SAR(10 g) = 0.435 W/kg
Maximum value of SAR (interpolated) = 1.14 W/kg

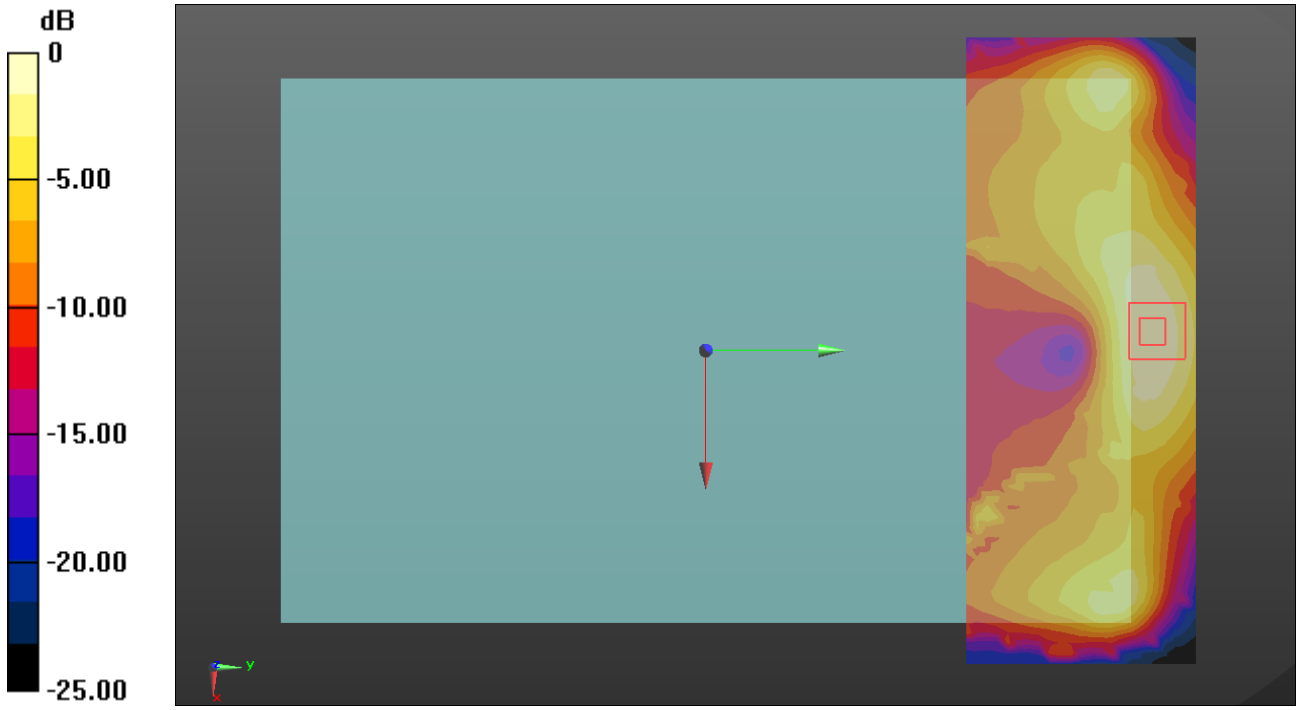

0 dB = 1.14 W/kg = 0.57 dBW/kg

LTE Band 25 + Bluetooth Ant1

Multi-Band Average SAR
Multi-Band Configurations:

DASY Configuration for Volume scan/QPSK RB 50/24 ch.21640/Volume Scan:

Date/Time: 2021-11-14, Test Laboratory: UL Korea, Ltd. Suwon Laboratory
Communication System: UID 0, LTE (FDD) (0); Frequency: 1860 MHz; Duty Cycle: 1:1; PMF: 1
Medium: HSL 1900 Medium parameters used: f = 1860 MHz; σ = 1.43 S/m; ε_r = 41.141; ρ = 1000 kg/m^3
Measurement Standard: DASY5 (IEEE/IEC/ANSI C63.19-2011)

- Probe: EX3DV4 - SN7645; ConvF(8.9, 8.9, 8.9) @ 1860 MHz; Calibrated: 2021-04-15
- Sensor-Surface: 1.4mm (Mechanical Surface Detection)
- Electronics: DAE4 Sn1468; Calibrated: 2021-09-27
- Phantom: ELI v6.0; Type: QDOVA003AA; Serial: TP:2005
- Measurement SW: DASY52, Version 52.10 (3)

DASY Configuration for Volume scan/GFSK ch.39/Volume Scan:

Date/Time: 2021-11-12, Test Laboratory: UL Korea, Ltd. Suwon Laboratory
Communication System: UID 0, Bluetooth (DH5) (0); Frequency: 2441 MHz; Duty Cycle: 1:1.29033; PMF: 1
Medium: HSL 2450 Medium parameters used (interpolated): f = 2441 MHz; σ = 1.836 S/m; ε_r = 39.761; ρ = 1000 kg/m^3
Measurement Standard: DASY5 (IEEE/IEC/ANSI C63.19-2011)

- Probe: EX3DV4 - SN7645; ConvF(8.26, 8.26, 8.26) @ 2441 MHz; Calibrated: 2021-04-15
- Sensor-Surface: 1.4mm (Mechanical Surface Detection)
- Electronics: DAE4 Sn1468; Calibrated: 2021-09-27
- Phantom: ELI v6.0; Type: QDOVA003AA; Serial: TP:2005
- Measurement SW: DASY52, Version 52.10 (4)

Multi Band Result:
SAR(1 g) = 0.982 W/kg; SAR(10 g) = 0.405 W/kg
Maximum value of SAR (interpolated) = 2.83 W/kg

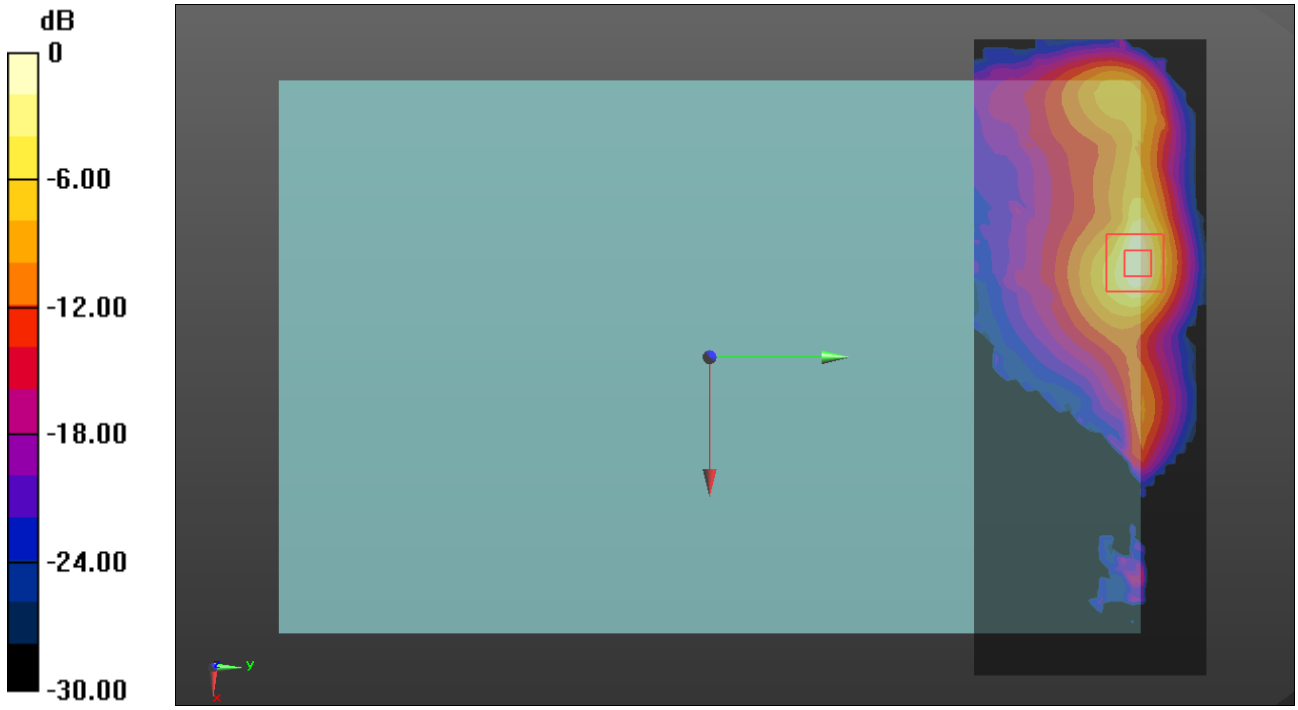

0 dB = 2.83 W/kg = 4.52 dBW/kg

LTE Band 25 + DTS MIMO

Multi-Band Average SAR
Multi-Band Configurations:

DASY Configuration for Volume scan/QPSK RB 50/24 ch.21640/Volume Scan:

Date/Time: 2021-11-14, Test Laboratory: UL Korea, Ltd. Suwon Laboratory
Communication System: UID 0, LTE (FDD) (0); Frequency: 1860 MHz; Duty Cycle: 1:1; PMF: 1
Medium: HSL 1900 Medium parameters used: f = 1860 MHz; σ = 1.43 S/m; ε_r = 41.141; ρ = 1000 kg/m^3
Measurement Standard: DASY5 (IEEE/IEC/ANSI C63.19-2011)

- Probe: EX3DV4 - SN7645; ConvF(8.9, 8.9, 8.9) @ 1860 MHz; Calibrated: 2021-04-15
- Sensor-Surface: 1.4mm (Mechanical Surface Detection)
- Electronics: DAE4 Sn1468; Calibrated: 2021-09-27
- Phantom: ELI v6.0; Type: QDOVA003AA; Serial: TP:2005
- Measurement SW: DASY52, Version 52.10 (3)

DASY Configuration for Volume scan/802.11b mode ch.1 MIMO/Volume Scan:

Date/Time: 2021-11-13, Test Laboratory: UL Korea, Ltd. Suwon Laboratory
Communication System: UID 0, IEEE 802.11b/g/n 2.4 GHz Band (0); Frequency: 2412 MHz; Duty Cycle: 1:1; PMF: 1
Medium: HSL 2450 Medium parameters used (interpolated): f = 2412 MHz; σ = 1.814 S/m; ε_r = 39.822; ρ = 1000 kg/m^3
Measurement Standard: DASY5 (IEEE/IEC/ANSI C63.19-2011)

- Probe: EX3DV4 - SN7645; ConvF(8.26, 8.26, 8.26) @ 2412 MHz; Calibrated: 2021-04-15
- Sensor-Surface: 1.4mm (Mechanical Surface Detection)
- Electronics: DAE4 Sn1468; Calibrated: 2021-09-27
- Phantom: ELI v6.0; Type: QDOVA003AA; Serial: TP:2005
- Measurement SW: DASY52, Version 52.10 (3)

Multi Band Result:
SAR(1 g) = 0.992 W/kg; SAR(10 g) = 0.408 W/kg
Maximum value of SAR (interpolated) = 2.85 W/kg

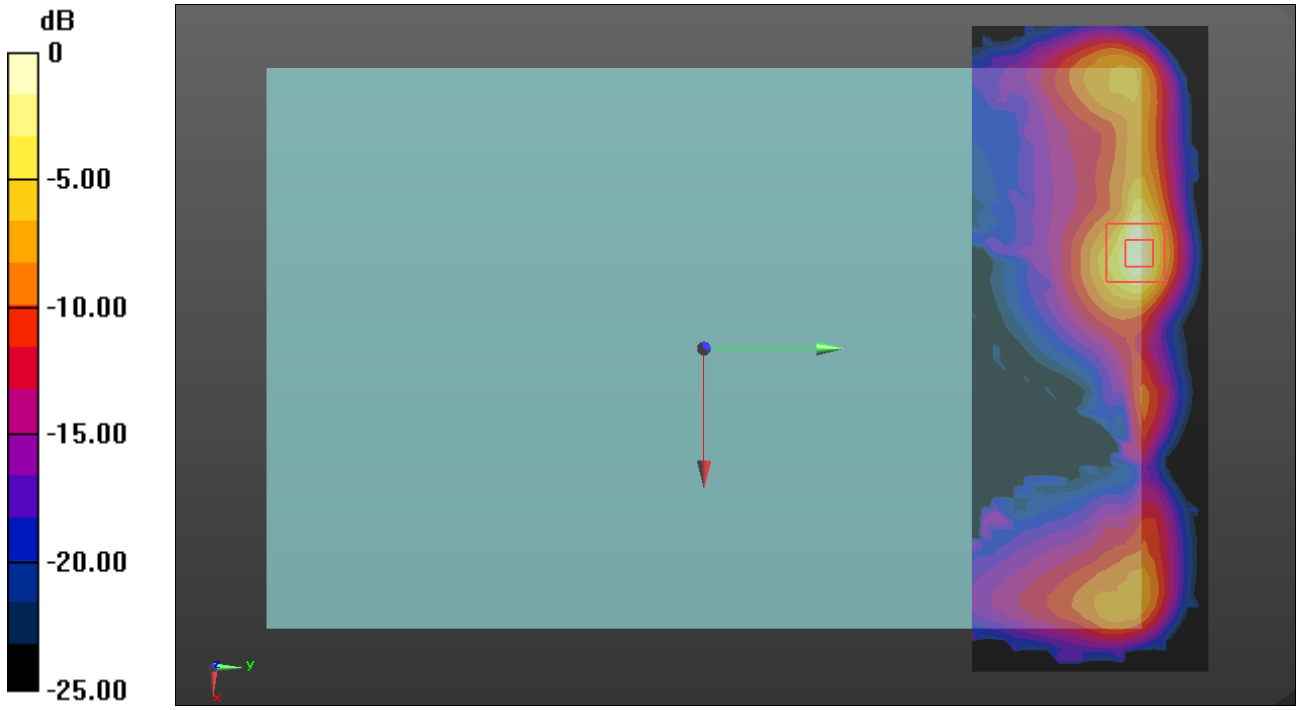

0 dB = 2.85 W/kg = 4.55 dBW/kg

LTE Band 26 + Bluetooth Ant1

Multi-Band Average SAR
Multi-Band Configurations:

DASY Configuration for Volume scan/QPSK RB 1/37 ch.26865/Volume Scan:

Date/Time: 2021-11-13, Test Laboratory: UL Korea, Ltd. Suwon Laboratory
Communication System: UID 0, LTE (FDD) (0); Frequency: 831.5 MHz; Duty Cycle: 1:1; PMF: 1
Medium: HSL 835 Medium parameters used (interpolated): f = 831.5 MHz; σ = 0.94 S/m; ε_r = 41.814; ρ = 1000 kg/m^3
Measurement Standard: DASY5 (IEEE/IEC/ANSI C63.19-2011)

- Probe: EX3DV4 - SN7314; ConvF(9.43, 9.43, 9.43) @ 831.5 MHz; Calibrated: 2021-05-31
- Sensor-Surface: 1.4mm (Mechanical Surface Detection)
- Electronics: DAE4 Sn1343; Calibrated: 2021-08-23
- Phantom: ELI V6.0 (20deg probe tilt); Type: QD OVA 003 AA; Serial: 2013
- Measurement SW: DASY52, Version 52.10 (3)

DASY Configuration for Volume scan/GFSK ch.39/Volume Scan:

Date/Time: 2021-11-12, Test Laboratory: UL Korea, Ltd. Suwon Laboratory
Communication System: UID 0, Bluetooth (DH5) (0); Frequency: 2441 MHz; Duty Cycle: 1:1.29033; PMF: 1
Medium: HSL 2450 Medium parameters used (interpolated): f = 2441 MHz; σ = 1.836 S/m; ε_r = 39.761; ρ = 1000 kg/m^3
Measurement Standard: DASY5 (IEEE/IEC/ANSI C63.19-2011)

- Probe: EX3DV4 - SN7645; ConvF(8.26, 8.26, 8.26) @ 2441 MHz; Calibrated: 2021-04-15
- Sensor-Surface: 1.4mm (Mechanical Surface Detection)
- Electronics: DAE4 Sn1468; Calibrated: 2021-09-27
- Phantom: ELI v6.0; Type: QDOVA003AA; Serial: TP:2005
- Measurement SW: DASY52, Version 52.10 (4)

Multi Band Result:
SAR(1 g) = 0.859 W/kg; SAR(10 g) = 0.440 W/kg
Maximum value of SAR (interpolated) = 1.97 W/kg

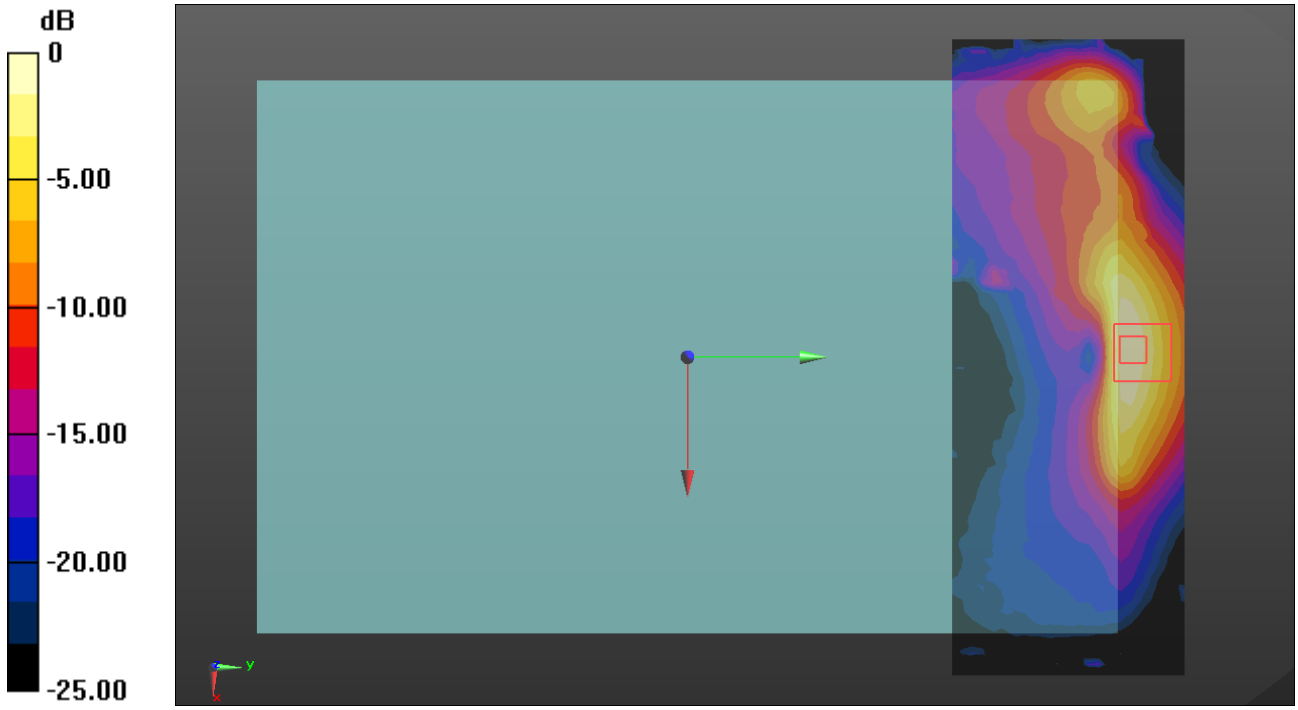

0 dB = 1.97 W/kg = 2.94 dBW/kg

LTE Band 26 + DTS Ant1

Multi-Band Average SAR
Multi-Band Configurations:

DASY Configuration for Volume scan/QPSK RB 1/37 ch.26865/Volume Scan:

Date/Time: 2021-11-13, Test Laboratory: UL Korea, Ltd. Suwon Laboratory
Communication System: UID 0, LTE (FDD) (0); Frequency: 831.5 MHz; Duty Cycle: 1:1; PMF: 1
Medium: HSL 835 Medium parameters used (interpolated): f = 831.5 MHz; σ = 0.94 S/m; ε_r = 41.814; ρ = 1000 kg/m^3
Measurement Standard: DASY5 (IEEE/IEC/ANSI C63.19-2011)

- Probe: EX3DV4 - SN7314; ConvF(9.43, 9.43, 9.43) @ 831.5 MHz; Calibrated: 2021-05-31
- Sensor-Surface: 1.4mm (Mechanical Surface Detection)
- Electronics: DAE4 Sn1343; Calibrated: 2021-08-23
- Phantom: ELI V6.0 (20deg probe tilt); Type: QD OVA 003 AA; Serial: 2013
- Measurement SW: DASY52, Version 52.10 (3)

DASY Configuration for Volume scan/802.11b mode ch.6 SISO Ant 1/Volume Scan:

Date/Time: 2021-11-17, Test Laboratory: UL Korea, Ltd. Suwon Laboratory
Communication System: UID 0, IEEE 802.11b/g/n 2.4 GHz Band (0); Frequency: 2437 MHz; Duty Cycle: 1:1; PMF: 1
Medium: HSL 2450 Medium parameters used (interpolated): f = 2437 MHz; σ = 1.788 S/m; ε_r = 38.425; ρ = 1000 kg/m^3
Measurement Standard: DASY5 (IEEE/IEC/ANSI C63.19-2011)

- Probe: EX3DV4 - SN7314; ConvF(7.47, 7.47, 7.47) @ 2437 MHz; Calibrated: 2021-05-31
- Sensor-Surface: 1.4mm (Mechanical Surface Detection)
- Electronics: DAE4 Sn1343; Calibrated: 2021-08-23
- Phantom: ELI V6.0 (20deg probe tilt); Type: QD OVA 003 AA; Serial: 2013
- Measurement SW: DASY52, Version 52.10 (3)

Multi Band Result:
SAR(1 g) = 0.859 W/kg; SAR(10 g) = 0.440 W/kg
Maximum value of SAR (interpolated) = 1.97 W/kg

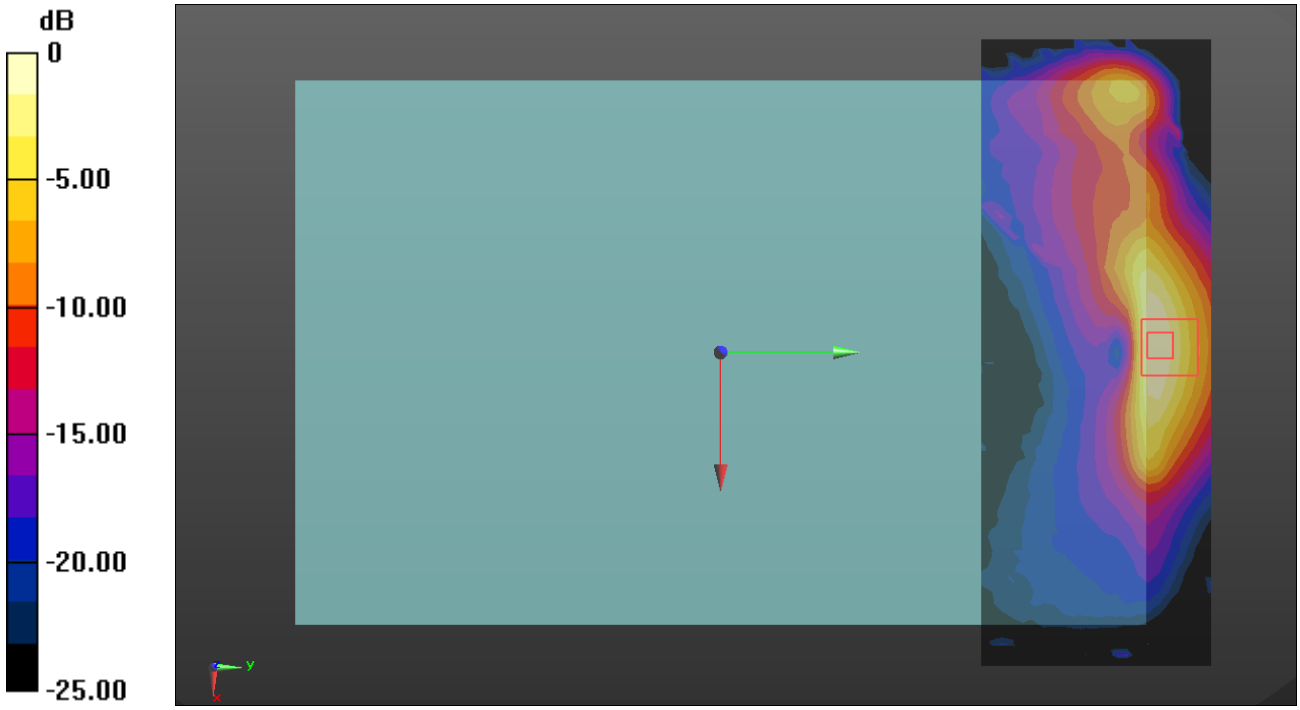

0 dB = 1.97 W/kg = 2.94 dBW/kg

LTE Band 26 + DTS MIMO

Multi-Band Average SAR
Multi-Band Configurations:

DASY Configuration for Volume scan/QPSK RB 1/37 ch.26865/Volume Scan:

Date/Time: 2021-11-13, Test Laboratory: UL Korea, Ltd. Suwon Laboratory
Communication System: UID 0, LTE (FDD) (0); Frequency: 831.5 MHz; Duty Cycle: 1:1; PMF: 1
Medium: HSL 835 Medium parameters used (interpolated): f = 831.5 MHz; σ = 0.94 S/m; ε_r = 41.814; ρ = 1000 kg/m^3
Measurement Standard: DASY5 (IEEE/IEC/ANSI C63.19-2011)

- Probe: EX3DV4 - SN7314; ConvF(9.43, 9.43, 9.43) @ 831.5 MHz; Calibrated: 2021-05-31
- Sensor-Surface: 1.4mm (Mechanical Surface Detection)
- Electronics: DAE4 Sn1343; Calibrated: 2021-08-23
- Phantom: ELI V6.0 (20deg probe tilt); Type: QD OVA 003 AA; Serial: 2013
- Measurement SW: DASY52, Version 52.10 (3)

DASY Configuration for Volume scan/802.11b mode ch.1 MIMO/Volume Scan:

Date/Time: 2021-11-13, Test Laboratory: UL Korea, Ltd. Suwon Laboratory
Communication System: UID 0, IEEE 802.11b/g/n 2.4 GHz Band (0); Frequency: 2412 MHz; Duty Cycle: 1:1; PMF: 1
Medium: HSL 2450 Medium parameters used (interpolated): f = 2412 MHz; σ = 1.814 S/m; ε_r = 39.822; ρ = 1000 kg/m^3
Measurement Standard: DASY5 (IEEE/IEC/ANSI C63.19-2011)

- Probe: EX3DV4 - SN7645; ConvF(8.26, 8.26, 8.26) @ 2412 MHz; Calibrated: 2021-04-15
- Sensor-Surface: 1.4mm (Mechanical Surface Detection)
- Electronics: DAE4 Sn1468; Calibrated: 2021-09-27
- Phantom: ELI v6.0; Type: QDOVA003AA; Serial: TP:2005
- Measurement SW: DASY52, Version 52.10 (3)

Multi Band Result:
SAR(1 g) = 0.871 W/kg; SAR(10 g) = 0.442 W/kg
Maximum value of SAR (interpolated) = 1.98 W/kg

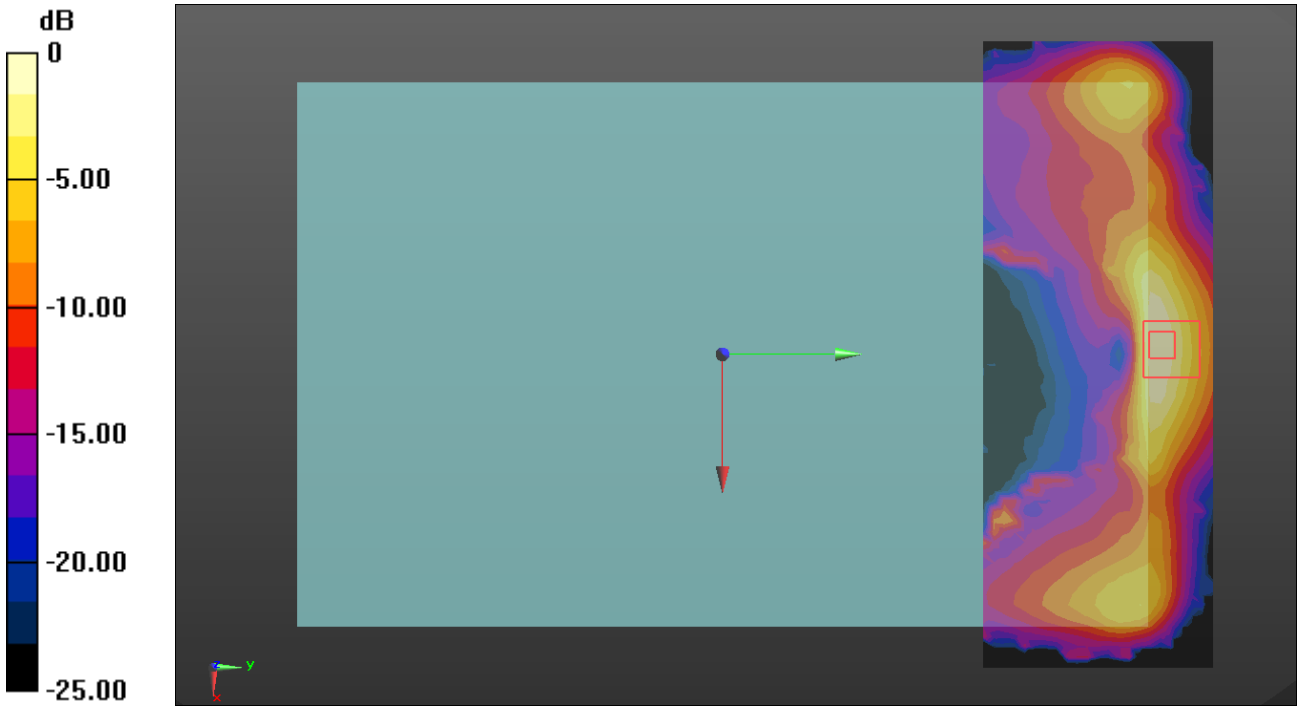

0 dB = 1.98 W/kg = 2.97 dBW/kg

LTE Band 41 + Bluetooth Ant1

Multi-Band Average SAR
Multi-Band Configurations:

DASY Configuration for Volume scan/QPSK RB 1/49 ch.40620/Volume Scan:

Date/Time: 2021-11-17, Test Laboratory: UL Korea, Ltd. Suwon Laboratory
Communication System: UID 0, LTE (TDD) (0); Frequency: 2593 MHz; Duty Cycle: 1:1.59956; PMF: 1
Medium: HSL 2600 Medium parameters used (interpolated): f = 2593 MHz; σ = 1.911 S/m; ε_r = 38.257; ρ = 1000 kg/m^3
Measurement Standard: DASY5 (IEEE/IEC/ANSI C63.19-2011)

- Probe: EX3DV4 - SN7314; ConvF(7.3, 7.3, 7.3) @ 2593 MHz; Calibrated: 2021-05-31
- Sensor-Surface: 1.4mm (Mechanical Surface Detection)
- Electronics: DAE4 Sn1343; Calibrated: 2021-08-23
- Phantom: ELI V6.0 (20deg probe tilt); Type: QD OVA 003 AA; Serial: 2013
- Measurement SW: DASY52, Version 52.10 (3)

DASY Configuration for Volume scan/GFSK ch.39/Volume Scan:

Date/Time: 2021-11-12, Test Laboratory: UL Korea, Ltd. Suwon Laboratory
Communication System: UID 0, Bluetooth (DH5) (0); Frequency: 2441 MHz; Duty Cycle: 1:1.29033; PMF: 1
Medium: HSL 2450 Medium parameters used (interpolated): f = 2441 MHz; σ = 1.836 S/m; ε_r = 39.761; ρ = 1000 kg/m^3
Measurement Standard: DASY5 (IEEE/IEC/ANSI C63.19-2011)

- Probe: EX3DV4 - SN7645; ConvF(8.26, 8.26, 8.26) @ 2441 MHz; Calibrated: 2021-04-15
- Sensor-Surface: 1.4mm (Mechanical Surface Detection)
- Electronics: DAE4 Sn1468; Calibrated: 2021-09-27
- Phantom: ELI v6.0; Type: QDOVA003AA; Serial: TP:2005
- Measurement SW: DASY52, Version 52.10 (4)

Multi Band Result:
SAR(1 g) = 1.06 W/kg; SAR(10 g) = 0.385 W/kg
Maximum value of SAR (interpolated) = 3.18 W/kg

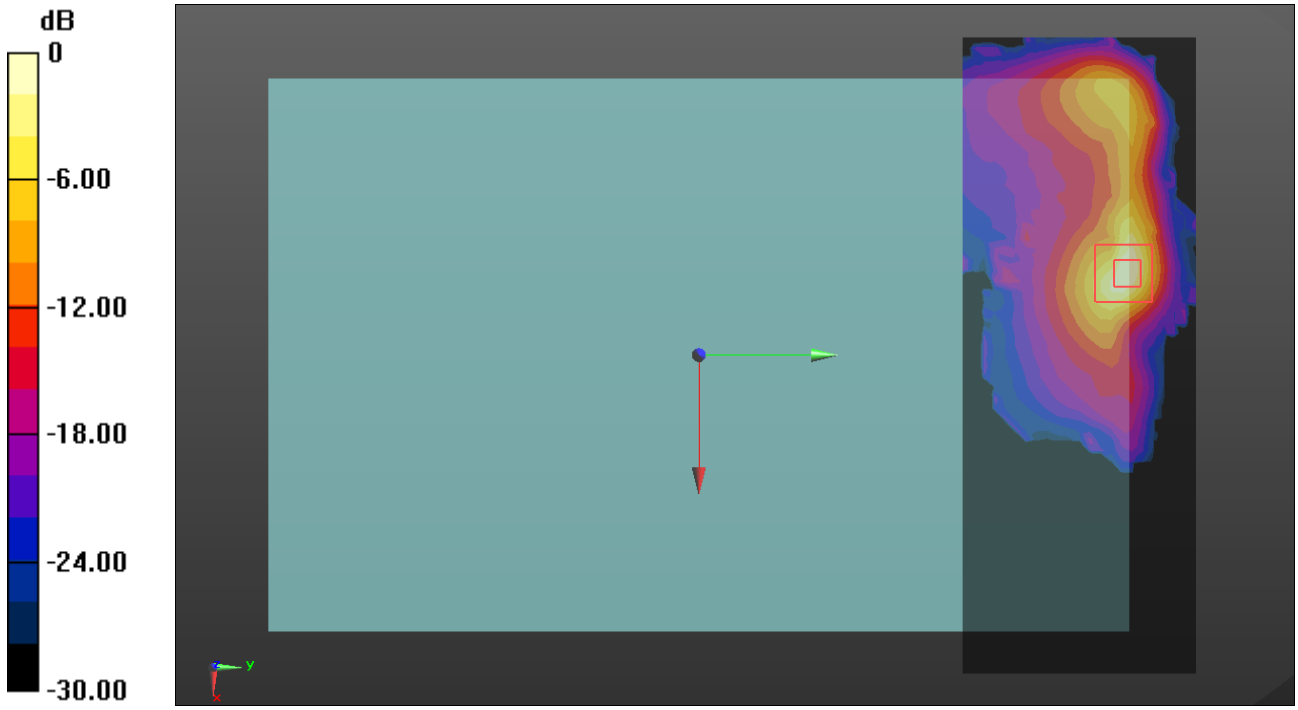

0 dB = 3.18 W/kg = 5.02 dBW/kg

LTE Band 41 + DTS Ant1

Multi-Band Average SAR
Multi-Band Configurations:

DASY Configuration for Volume scan/QPSK RB 1/49 ch.40620/Volume Scan:

Date/Time: 2021-11-17, Test Laboratory: UL Korea, Ltd. Suwon Laboratory
Communication System: UID 0, LTE (TDD) (0); Frequency: 2593 MHz; Duty Cycle: 1:1.59956; PMF: 1
Medium: HSL 2600 Medium parameters used (interpolated): f = 2593 MHz; σ = 1.911 S/m; ε_r = 38.257; ρ = 1000 kg/m^3
Measurement Standard: DASY5 (IEEE/IEC/ANSI C63.19-2011)

- Probe: EX3DV4 - SN7314; ConvF(7.3, 7.3, 7.3) @ 2593 MHz; Calibrated: 2021-05-31
- Sensor-Surface: 1.4mm (Mechanical Surface Detection)
- Electronics: DAE4 Sn1343; Calibrated: 2021-08-23
- Phantom: ELI V6.0 (20deg probe tilt); Type: QD OVA 003 AA; Serial: 2013
- Measurement SW: DASY52, Version 52.10 (3)

DASY Configuration for Volume scan/802.11b mode ch.6 SISO Ant 1/Volume Scan:

Date/Time: 2021-11-17, Test Laboratory: UL Korea, Ltd. Suwon Laboratory
Communication System: UID 0, IEEE 802.11b/g/n 2.4 GHz Band (0); Frequency: 2437 MHz; Duty Cycle: 1:1; PMF: 1
Medium: HSL 2450 Medium parameters used (interpolated): f = 2437 MHz; σ = 1.788 S/m; ε_r = 38.425; ρ = 1000 kg/m^3
Measurement Standard: DASY5 (IEEE/IEC/ANSI C63.19-2011)

- Probe: EX3DV4 - SN7314; ConvF(7.47, 7.47, 7.47) @ 2437 MHz; Calibrated: 2021-05-31
- Sensor-Surface: 1.4mm (Mechanical Surface Detection)
- Electronics: DAE4 Sn1343; Calibrated: 2021-08-23
- Phantom: ELI V6.0 (20deg probe tilt); Type: QD OVA 003 AA; Serial: 2013
- Measurement SW: DASY52, Version 52.10 (3)

Multi Band Result:
SAR(1 g) = 1.05 W/kg; SAR(10 g) = 0.382 W/kg
Maximum value of SAR (interpolated) = 3.22 W/kg

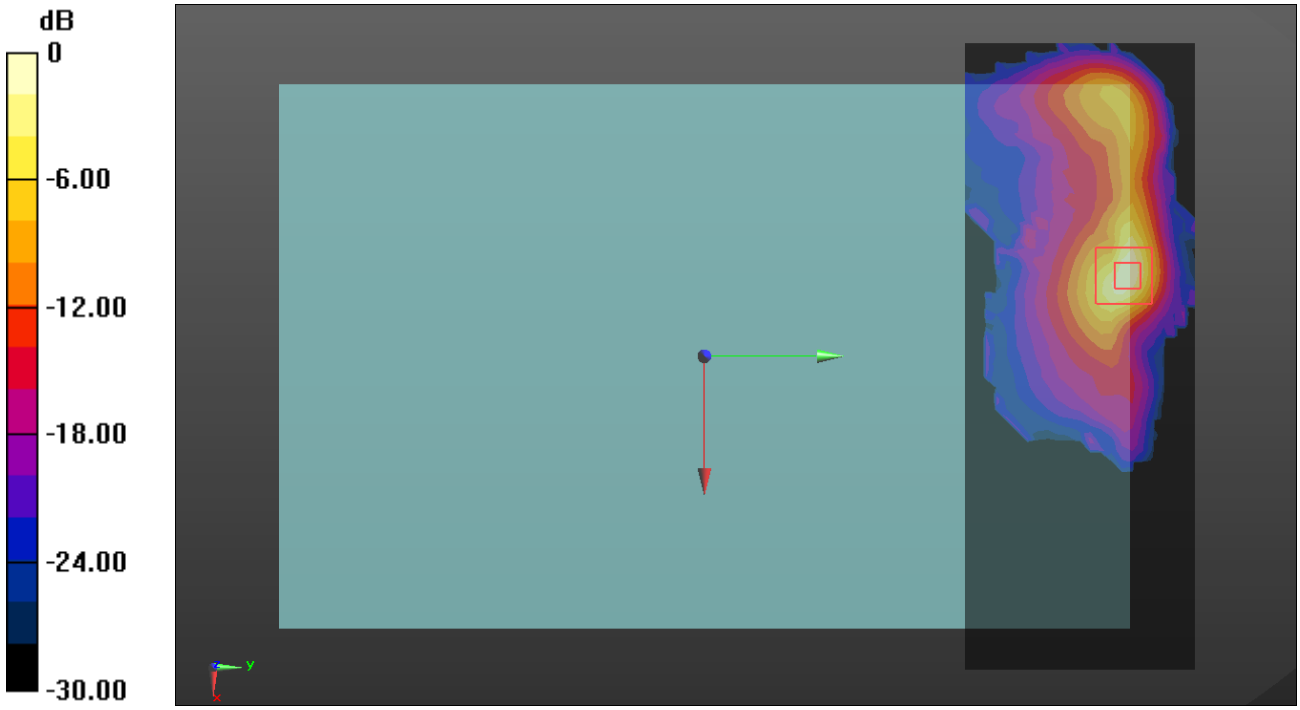

0 dB = 3.22 W/kg = 5.08 dBW/kg

LTE Band 41 + DTS MIMO

Multi-Band Average SAR
Multi-Band Configurations:

DASY Configuration for Volume scan/QPSK RB 1/49 ch.40620Volume Scan:

Date/Time: 2021-11-17, Test Laboratory: UL Korea, Ltd. Suwon Laboratory
Communication System: UID 0, LTE (TDD) (0); Frequency: 2593 MHz; Duty Cycle: 1:1.59956; PMF: 1
Medium: HSL 2600 Medium parameters used (interpolated): f = 2593 MHz; σ = 1.911 S/m; ε_r = 38.257; ρ = 1000 kg/m^3
Measurement Standard: DASY5 (IEEE/IEC/ANSI C63.19-2011)

- Probe: EX3DV4 - SN7314; ConvF(7.3, 7.3, 7.3) @ 2593 MHz; Calibrated: 2021-05-31
- Sensor-Surface: 1.4mm (Mechanical Surface Detection)
- Electronics: DAE4 Sn1343; Calibrated: 2021-08-23
- Phantom: ELI V6.0 (20deg probe tilt); Type: QD OVA 003 AA; Serial: 2013
- Measurement SW: DASY52, Version 52.10 (3)

DASY Configuration for Volume scan/802.11b mode ch.1 MIMO/Volume Scan:

Date/Time: 2021-11-13, Test Laboratory: UL Korea, Ltd. Suwon Laboratory
Communication System: UID 0, IEEE 802.11b/g/n 2.4 GHz Band (0); Frequency: 2412 MHz; Duty Cycle: 1:1; PMF: 1
Medium: HSL 2450 Medium parameters used (interpolated): f = 2412 MHz; σ = 1.814 S/m; ε_r = 39.822; ρ = 1000 kg/m^3
Measurement Standard: DASY5 (IEEE/IEC/ANSI C63.19-2011)

- Probe: EX3DV4 - SN7645; ConvF(8.26, 8.26, 8.26) @ 2412 MHz; Calibrated: 2021-04-15
- Sensor-Surface: 1.4mm (Mechanical Surface Detection)
- Electronics: DAE4 Sn1468; Calibrated: 2021-09-27
- Phantom: ELI v6.0; Type: QDOVA003AA; Serial: TP:2005
- Measurement SW: DASY52, Version 52.10 (3)

Multi Band Result:
SAR(1 g) = 1.07 W/kg; SAR(10 g) = 0.391 W/kg
Maximum value of SAR (interpolated) = 3.22 W/kg

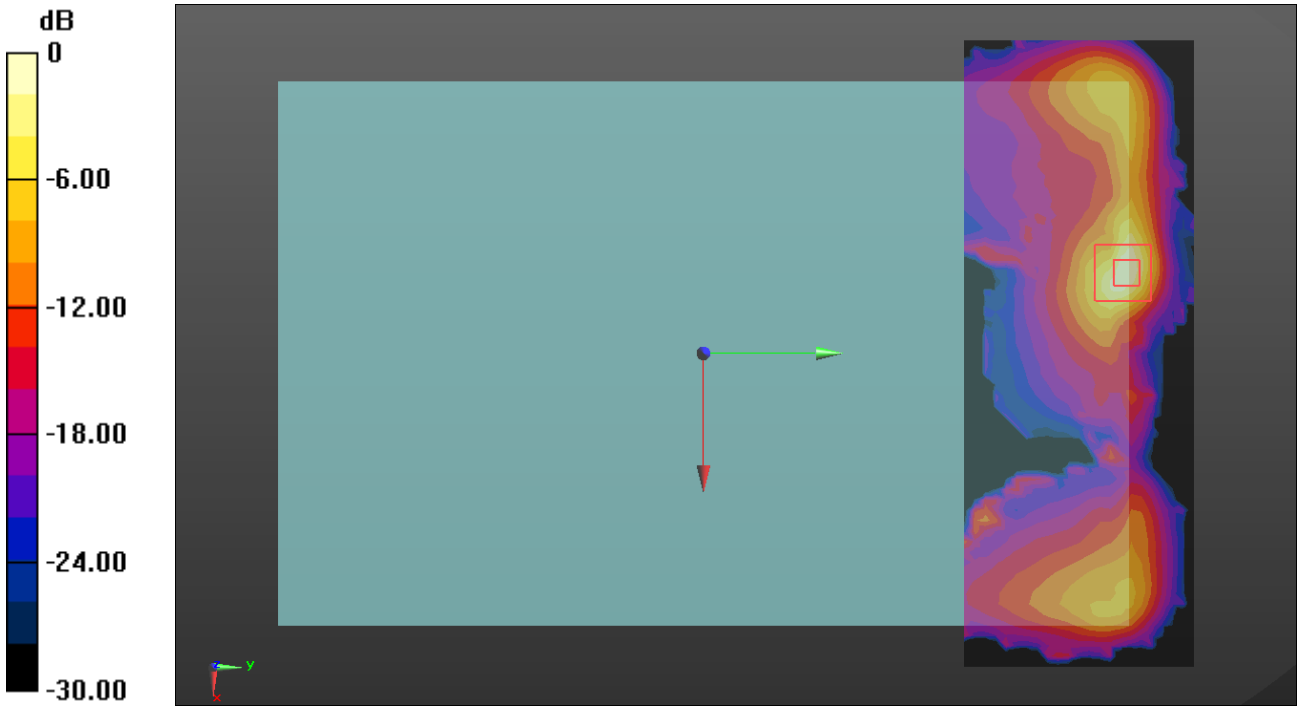

0 dB = 3.22 W/kg = 5.08 dBW/kg

LTE Band 66 + Bluetooth Ant1

Multi-Band Average SAR
Multi-Band Configurations:
DASY Configuration for Volume scan/QPSK RB 50/24 ch.132322/Volume Scan:
Date/Time: 2021-11-14, Test Laboratory: UL Korea, Ltd. Suwon Laboratory
Communication System: UID 0, LTE (FDD) (0); Frequency: 1745 MHz; Duty Cycle: 1:1; PMF: 1
Medium: HSL1750 Medium parameters used: f = 1745 MHz; σ = 1.383 S/m; ε_r = 41.342; ρ = 1000 kg/m^3
Measurement Standard: DASY5 (IEEE/IEC/ANSI C63.19-2011)

- Probe: EX3DV4 - SN7645; ConvF(9.3, 9.3, 9.3) @ 1745 MHz; Calibrated: 2021-04-15
- Sensor-Surface: 1.4mm (Mechanical Surface Detection)
- Electronics: DAE4 Sn1468; Calibrated: 2021-09-27
- Phantom: ELI v6.0; Type: QDOVA003AA; Serial: TP:2005
- Measurement SW: DASY52, Version 52.10 (3)

DASY Configuration for Volume scan/GFSK ch.39/Volume Scan:

Date/Time: 2021-11-12, Test Laboratory: UL Korea, Ltd. Suwon Laboratory
Communication System: UID 0, Bluetooth (DH5) (0); Frequency: 2441 MHz; Duty Cycle: 1:1.29033; PMF: 1
Medium: HSL 2450 Medium parameters used (interpolated): f = 2441 MHz; σ = 1.836 S/m; ε_r = 39.761; ρ = 1000 kg/m^3
Measurement Standard: DASY5 (IEEE/IEC/ANSI C63.19-2011)

- Probe: EX3DV4 - SN7645; ConvF(8.26, 8.26, 8.26) @ 2441 MHz; Calibrated: 2021-04-15
- Sensor-Surface: 1.4mm (Mechanical Surface Detection)
- Electronics: DAE4 Sn1468; Calibrated: 2021-09-27
- Phantom: ELI v6.0; Type: QDOVA003AA; Serial: TP:2005
- Measurement SW: DASY52, Version 52.10 (4)

Multi Band Result:
SAR(1 g) = 0.843 W/kg; SAR(10 g) = 0.352 W/kg
Maximum value of SAR (interpolated) = 2.62 W/kg

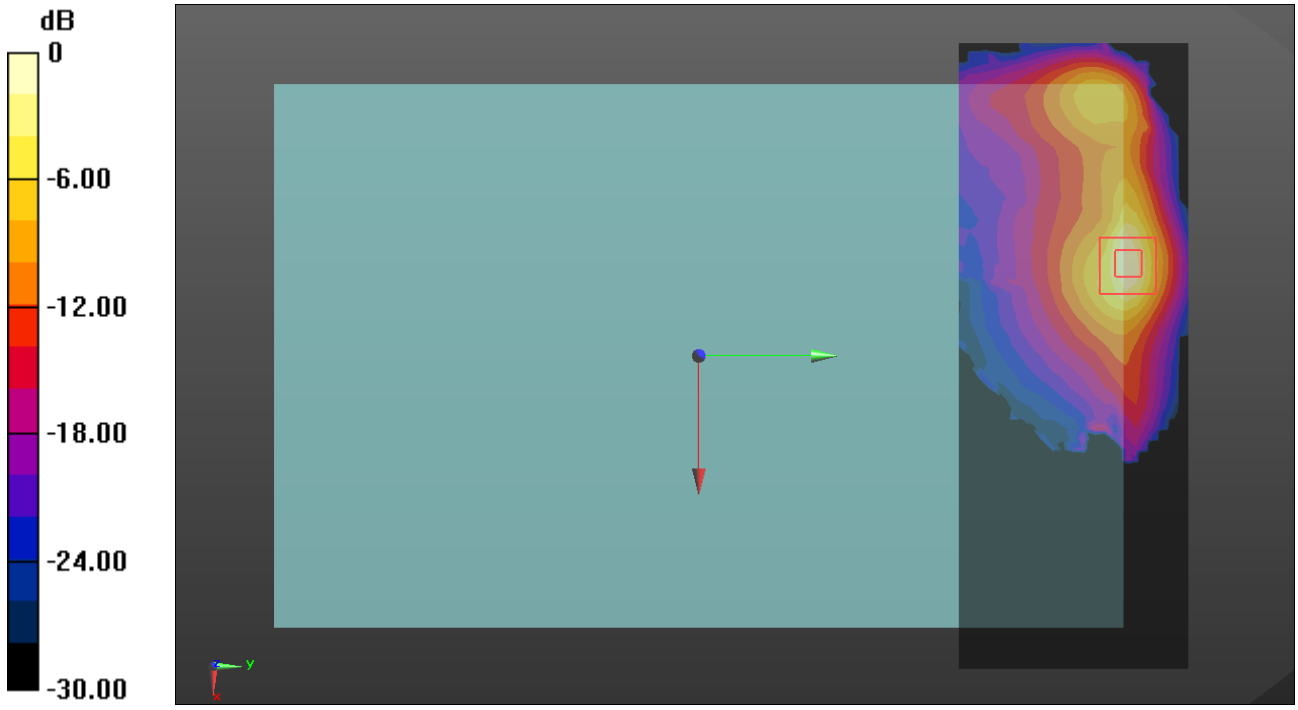

0 dB = 2.62 W/kg = 4.18 dBW/kg

LTE Band 66 + DTS MIMO

Multi-Band Average SAR
Multi-Band Configurations:

DASY Configuration for Volume scan/QPSK RB 50/24 ch.132322/Volume Scan:

Date/Time: 2021-11-14, Test Laboratory: UL Korea, Ltd. Suwon Laboratory
Communication System: UID 0, LTE (FDD) (0); Frequency: 1745 MHz; Duty Cycle: 1:1; PMF: 1
Medium: HSL1750 Medium parameters used: f = 1745 MHz; σ = 1.383 S/m; ε_r = 41.342; ρ = 1000 kg/m^3
Measurement Standard: DASY5 (IEEE/IEC/ANSI C63.19-2011)

- Probe: EX3DV4 - SN7645; ConvF(9.3, 9.3, 9.3) @ 1745 MHz; Calibrated: 2021-04-15
- Sensor-Surface: 1.4mm (Mechanical Surface Detection)
- Electronics: DAE4 Sn1468; Calibrated: 2021-09-27
- Phantom: ELI v6.0; Type: QDOVA003AA; Serial: TP:2005
- Measurement SW: DASY52, Version 52.10 (3)

DASY Configuration for Volume scan/802.11b mode ch.1 MIMO/Volume Scan:

Date/Time: 2021-11-13, Test Laboratory: UL Korea, Ltd. Suwon Laboratory
Communication System: UID 0, IEEE 802.11b/g/n 2.4 GHz Band (0); Frequency: 2412 MHz; Duty Cycle: 1:1; PMF: 1
Medium: HSL 2450 Medium parameters used (interpolated): f = 2412 MHz; σ = 1.814 S/m; ε_r = 39.822; ρ = 1000 kg/m^3
Measurement Standard: DASY5 (IEEE/IEC/ANSI C63.19-2011)

- Probe: EX3DV4 - SN7645; ConvF(8.26, 8.26, 8.26) @ 2412 MHz; Calibrated: 2021-04-15
- Sensor-Surface: 1.4mm (Mechanical Surface Detection)
- Electronics: DAE4 Sn1468; Calibrated: 2021-09-27
- Phantom: ELI v6.0; Type: QDOVA003AA; Serial: TP:2005
- Measurement SW: DASY52, Version 52.10 (3)

Multi Band Result:
SAR(1 g) = 0.854 W/kg; SAR(10 g) = 0.355 W/kg
Maximum value of SAR (interpolated) = 2.66 W/kg

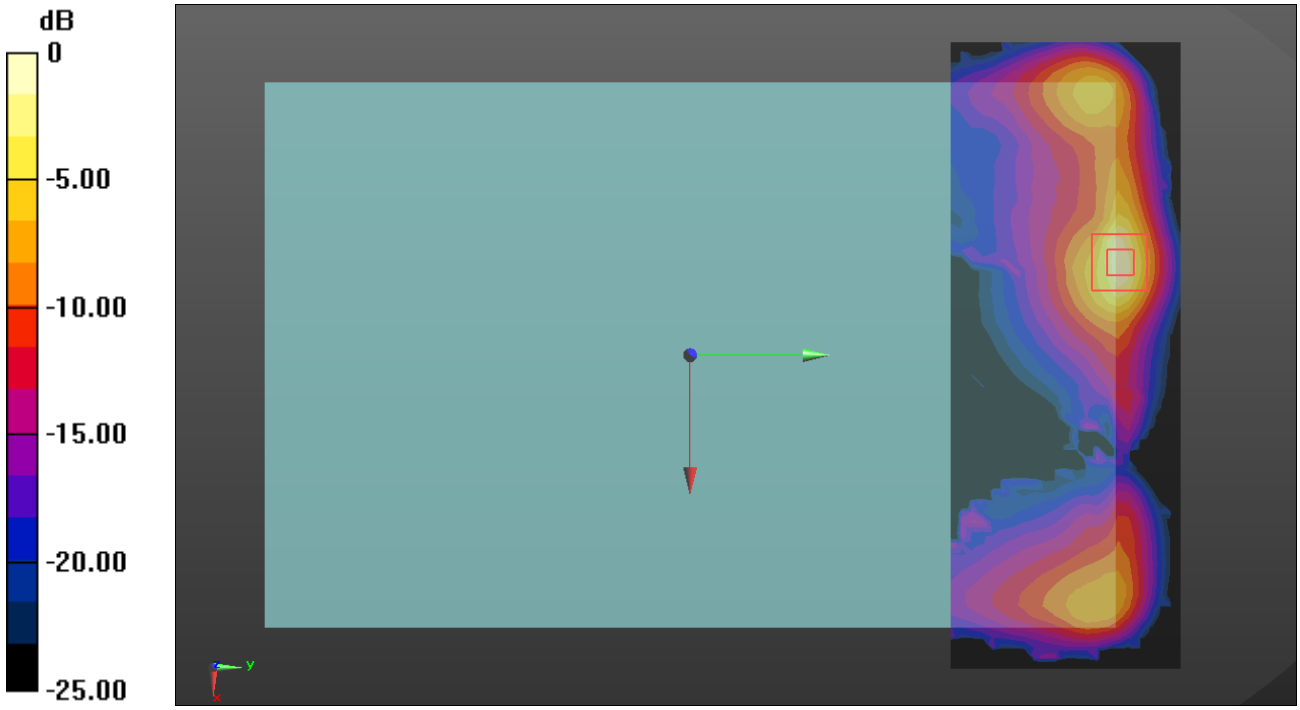

0 dB = 2.66 W/kg = 4.25 dBW/kg

NR Band n5 + Bluetooth Ant1

Multi-Band Average SAR
Multi-Band Configurations:

DASY Configuration for Volume scan/QPSK RB 1/53 ch.26865/Volume Scan:

Date/Time: 2021-11-14, Test Laboratory: UL Korea, Ltd. Suwon Laboratory
Communication System: UID 0, LTE (FDD) (0); Frequency: 836.5 MHz; Duty Cycle: 1:1; PMF: 1
Medium: HSL835 Medium parameters used (interpolated): f = 836.5 MHz; σ = 0.943 S/m; ε_r = 41.745; ρ = 1000 kg/m^3
Measurement Standard: DASY5 (IEEE/IEC/ANSI C63.19-2011)

- Probe: EX3DV4 - SN7330; ConvF(10.8, 10.8, 10.8) @ 836.5 MHz; Calibrated: 2021-09-29
- Sensor-Surface: 1.4mm (Mechanical Surface Detection)
- Electronics: DAE4 Sn1591; Calibrated: 2021-03-26
- Phantom: ELI V6.0 (20deg probe tilt) (Left); Type: QD OVA 003 AA; Serial: 2111
- Measurement SW: DASY52, Version 52.10 (3)

DASY Configuration for Volume scan/GFSK ch.39/Volume Scan:

Date/Time: 2021-11-12, Test Laboratory: UL Korea, Ltd. Suwon Laboratory
Communication System: UID 0, Bluetooth (DH5) (0); Frequency: 2441 MHz; Duty Cycle: 1:1.29033; PMF: 1
Medium: HSL 2450 Medium parameters used (interpolated): f = 2441 MHz; σ = 1.836 S/m; ε_r = 39.761; ρ = 1000 kg/m^3
Measurement Standard: DASY5 (IEEE/IEC/ANSI C63.19-2011)

- Probe: EX3DV4 - SN7645; ConvF(8.26, 8.26, 8.26) @ 2441 MHz; Calibrated: 2021-04-15
- Sensor-Surface: 1.4mm (Mechanical Surface Detection)
- Electronics: DAE4 Sn1468; Calibrated: 2021-09-27
- Phantom: ELI v6.0; Type: QDOVA003AA; Serial: TP:2005
- Measurement SW: DASY52, Version 52.10 (4)

Multi Band Result:
SAR(1 g) = 0.907 W/kg; SAR(10 g) = 0.444 W/kg
Maximum value of SAR (interpolated) = 2.14 W/kg

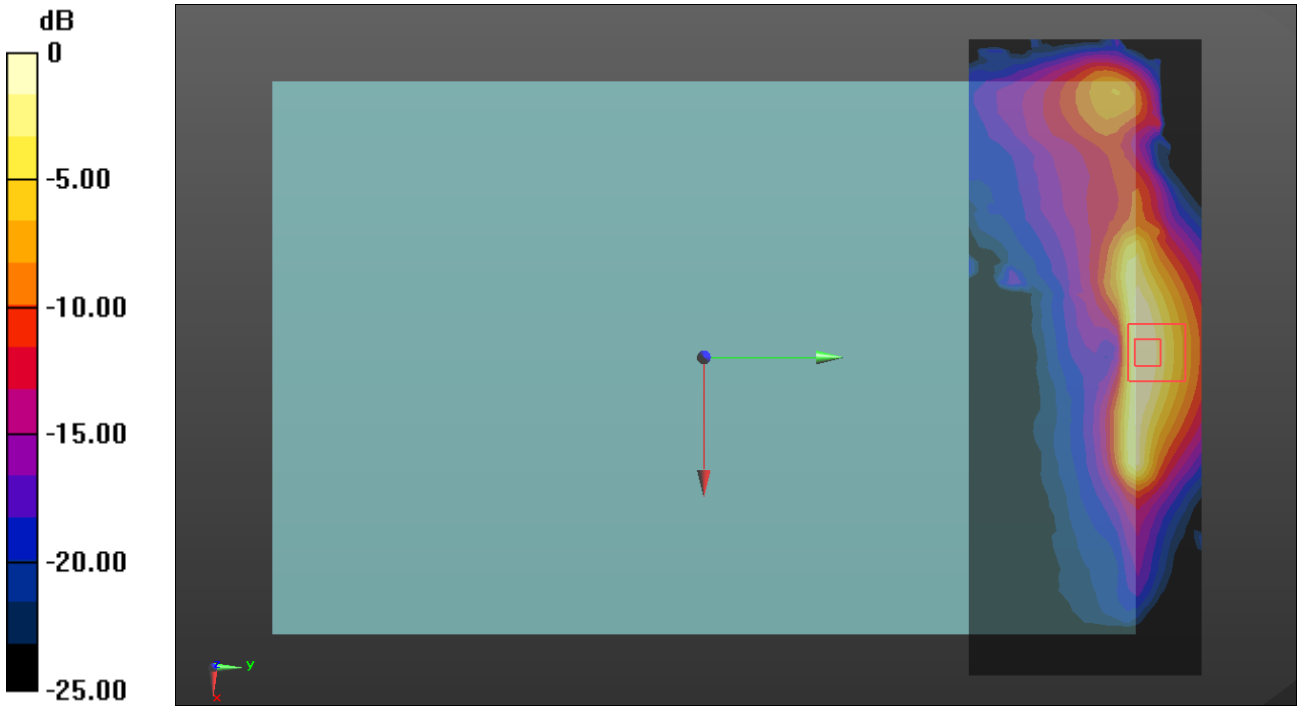

0 dB = 2.14 W/kg = 3.30 dBW/kg

NR Band n5 + DTS Ant1

Multi-Band Average SAR
Multi-Band Configurations:

DASY Configuration for Volume scan/QPSK RB 1/53 ch.167300/Volume Scan:

Date/Time: 2021-11-14, Test Laboratory: UL Korea, Ltd. Suwon Laboratory
Communication System: UID 0, LTE (FDD) (0); Frequency: 836.5 MHz; Duty Cycle: 1:1; PMF: 1
Medium: HSL835 Medium parameters used (interpolated): f = 836.5 MHz; σ = 0.943 S/m; ε_r = 41.745; ρ = 1000 kg/m^3
Measurement Standard: DASY5 (IEEE/IEC/ANSI C63.19-2011)

- Probe: EX3DV4 - SN7330; ConvF(10.8, 10.8, 10.8) @ 836.5 MHz; Calibrated: 2021-09-29
- Sensor-Surface: 1.4mm (Mechanical Surface Detection)
- Electronics: DAE4 Sn1591; Calibrated: 2021-03-26
- Phantom: ELI V6.0 (20deg probe tilt) (Left); Type: QD OVA 003 AA; Serial: 2111
- Measurement SW: DASY52, Version 52.10 (3)

DASY Configuration for Volume scan/GFSK ch.39/Volume Scan:

Date/Time: 2021-11-12, Test Laboratory: UL Korea, Ltd. Suwon Laboratory
Communication System: UID 0, Bluetooth (DH5) (0); Frequency: 2441 MHz; Duty Cycle: 1:1.29033; PMF: 1
Medium: HSL 2450 Medium parameters used (interpolated): f = 2441 MHz; σ = 1.836 S/m; ε_r = 39.761; ρ = 1000 kg/m^3
Measurement Standard: DASY5 (IEEE/IEC/ANSI C63.19-2011)

- Probe: EX3DV4 - SN7645; ConvF(8.26, 8.26, 8.26) @ 2441 MHz; Calibrated: 2021-04-15
- Sensor-Surface: 1.4mm (Mechanical Surface Detection)
- Electronics: DAE4 Sn1468; Calibrated: 2021-09-27
- Phantom: ELI v6.0; Type: QDOVA003AA; Serial: TP:2005
- Measurement SW: DASY52, Version 52.10 (4)

Multi Band Result:
SAR(1 g) = 0.907 W/kg; SAR(10 g) = 0.444 W/kg
Maximum value of SAR (interpolated) = 2.14 W/kg

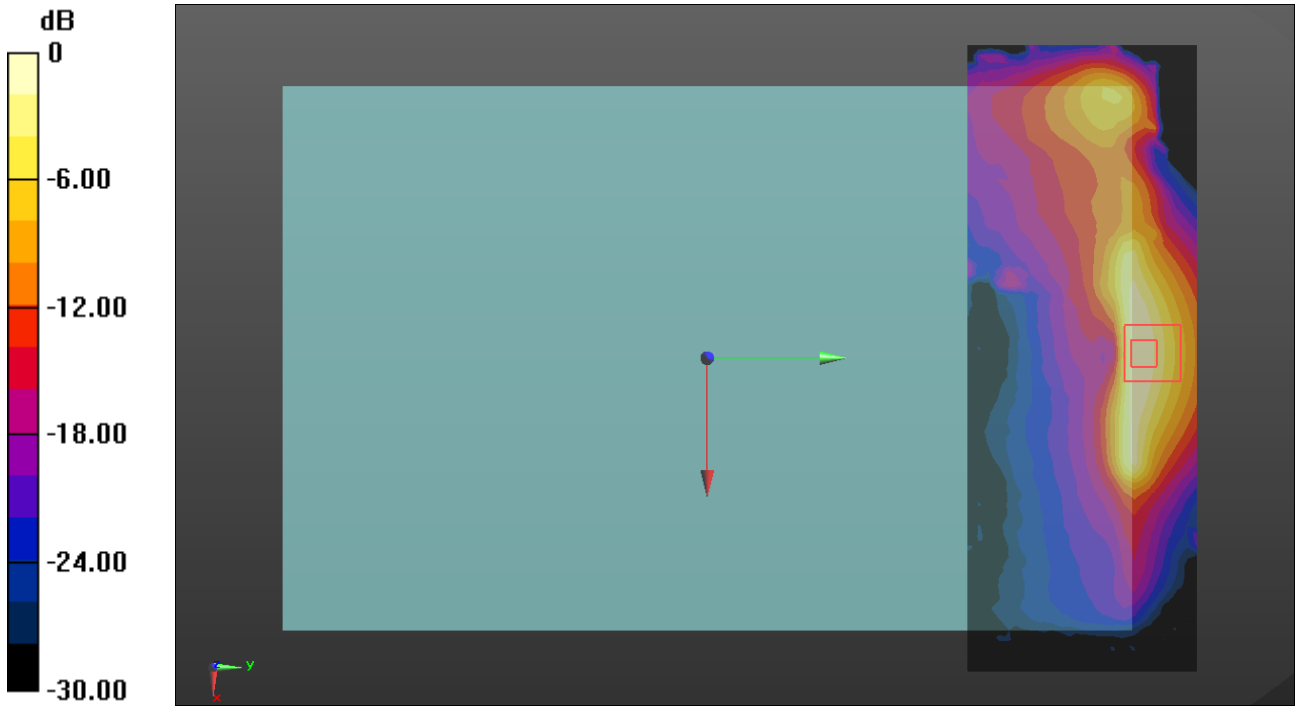

0 dB = 2.14 W/kg = 3.30 dBW/kg

NR Band n5 + DTS MIMO

Multi-Band Average SAR
Multi-Band Configurations:

DASY Configuration for Volume scan/QPSK RB 1/53 ch.167300/Volume Scan:

Date/Time: 2021-11-14, Test Laboratory: UL Korea, Ltd. Suwon Laboratory
Communication System: UID 0, LTE (FDD) (0); Frequency: 836.5 MHz; Duty Cycle: 1:1; PMF: 1
Medium: HSL835 Medium parameters used (interpolated): f = 836.5 MHz; σ = 0.943 S/m; ε_r = 41.745; ρ = 1000 kg/m^3
Measurement Standard: DASY5 (IEEE/IEC/ANSI C63.19-2011)

- Probe: EX3DV4 - SN7330; ConvF(10.8, 10.8, 10.8) @ 836.5 MHz; Calibrated: 2021-09-29
- Sensor-Surface: 1.4mm (Mechanical Surface Detection)
- Electronics: DAE4 Sn1591; Calibrated: 2021-03-26
- Phantom: ELI V6.0 (20deg probe tilt) (Left); Type: QD OVA 003 AA; Serial: 2111
- Measurement SW: DASY52, Version 52.10 (3)

DASY Configuration for Volume scan/802.11b mode ch.1 MIMO/Volume Scan:

Date/Time: 2021-11-13, Test Laboratory: UL Korea, Ltd. Suwon Laboratory
Communication System: UID 0, IEEE 802.11b/g/n 2.4 GHz Band (0); Frequency: 2412 MHz; Duty Cycle: 1:1; PMF: 1
Medium: HSL 2450 Medium parameters used (interpolated): f = 2412 MHz; σ = 1.814 S/m; ε_r = 39.822; ρ = 1000 kg/m^3
Measurement Standard: DASY5 (IEEE/IEC/ANSI C63.19-2011)

- Probe: EX3DV4 - SN7645; ConvF(8.26, 8.26, 8.26) @ 2412 MHz; Calibrated: 2021-04-15
- Sensor-Surface: 1.4mm (Mechanical Surface Detection)
- Electronics: DAE4 Sn1468; Calibrated: 2021-09-27
- Phantom: ELI v6.0; Type: QDOVA003AA; Serial: TP:2005
- Measurement SW: DASY52, Version 52.10 (3)

Multi Band Result:
SAR(1 g) = 0.916 W/kg; SAR(10 g) = 0.445 W/kg
Maximum value of SAR (interpolated) = 2.19 W/kg

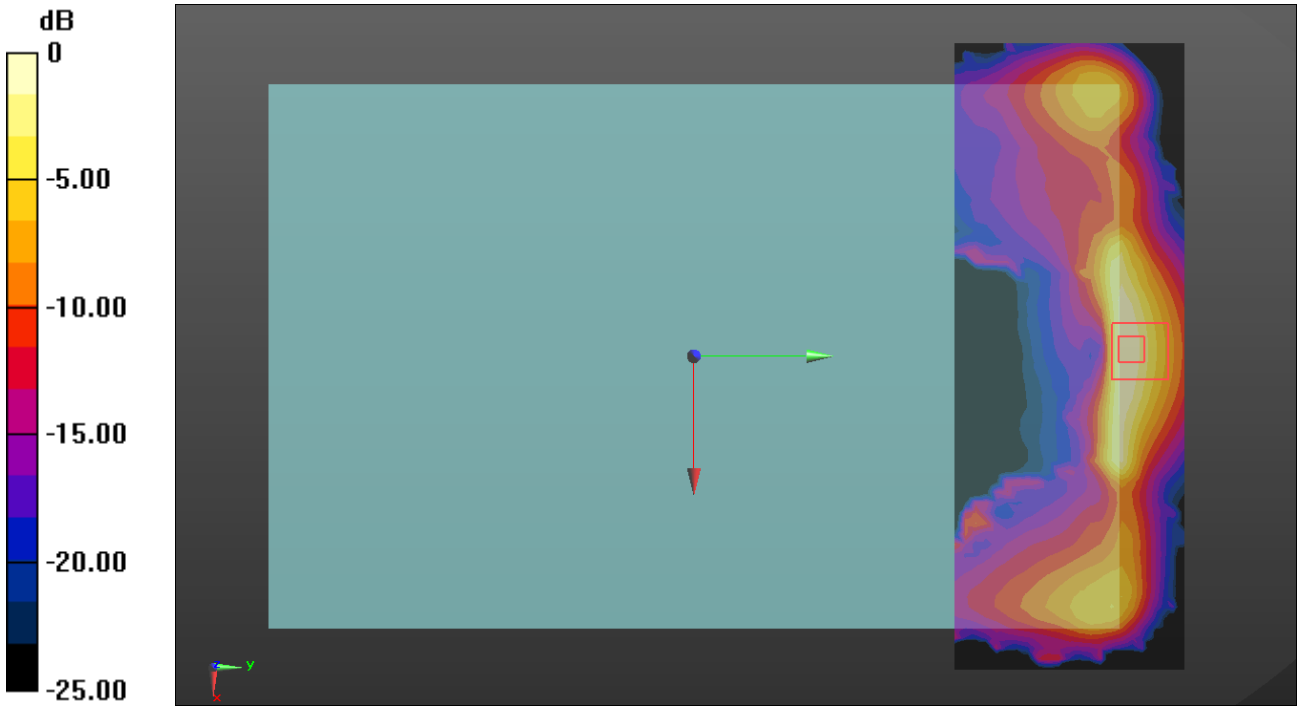

0 dB = 2.19 W/kg = 3.40 dBW/kg

NR Band n66 + Bluetooth Ant1

Multi-Band Average SAR
Multi-Band Configurations:

DASY Configuration for Volume scan/QPSK RB 1/1 ch.349000/Volume Scan:

Date/Time: 2021-11-15, Test Laboratory: UL Korea, Ltd. Suwon Laboratory
Communication System: UID 0, NR (0); Frequency: 1745 MHz; Duty Cycle: 1:1; PMF: 1.12202e-005
Medium: HSL 1700 Medium parameters used: f = 1745 MHz; σ = 1.383 S/m; ε_r = 41.342; ρ = 1000 kg/m^3
Measurement Standard: DASY5 (IEEE/IEC/ANSI C63.19-2011)

- Probe: EX3DV4 - SN7645; ConvF(9.3, 9.3, 9.3) @ 1745 MHz; Calibrated: 2021-04-15
- Sensor-Surface: 1.4mm (Mechanical Surface Detection)
- Electronics: DAE4 Sn1468; Calibrated: 2021-09-27
- Phantom: ELI v6.0; Type: QDOVA003AA; Serial: TP:2005
- Measurement SW: DASY52, Version 52.10 (3)

DASY Configuration for Volume scan/GFSK ch.39/Volume Scan:

Date/Time: 2021-11-12, Test Laboratory: UL Korea, Ltd. Suwon Laboratory
Communication System: UID 0, Bluetooth (DH5) (0); Frequency: 2441 MHz; Duty Cycle: 1:1.29033; PMF: 1
Medium: HSL 2450 Medium parameters used (interpolated): f = 2441 MHz; σ = 1.836 S/m; ε_r = 39.761; ρ = 1000 kg/m^3
Measurement Standard: DASY5 (IEEE/IEC/ANSI C63.19-2011)

- Probe: EX3DV4 - SN7645; ConvF(8.26, 8.26, 8.26) @ 2441 MHz; Calibrated: 2021-04-15
- Sensor-Surface: 1.4mm (Mechanical Surface Detection)
- Electronics: DAE4 Sn1468; Calibrated: 2021-09-27
- Phantom: ELI v6.0; Type: QDOVA003AA; Serial: TP:2005
- Measurement SW: DASY52, Version 52.10 (4)

Multi Band Result:
SAR(1 g) = 0.733 W/kg; SAR(10 g) = 0.310 W/kg
Maximum value of SAR (interpolated) = 2.18 W/kg

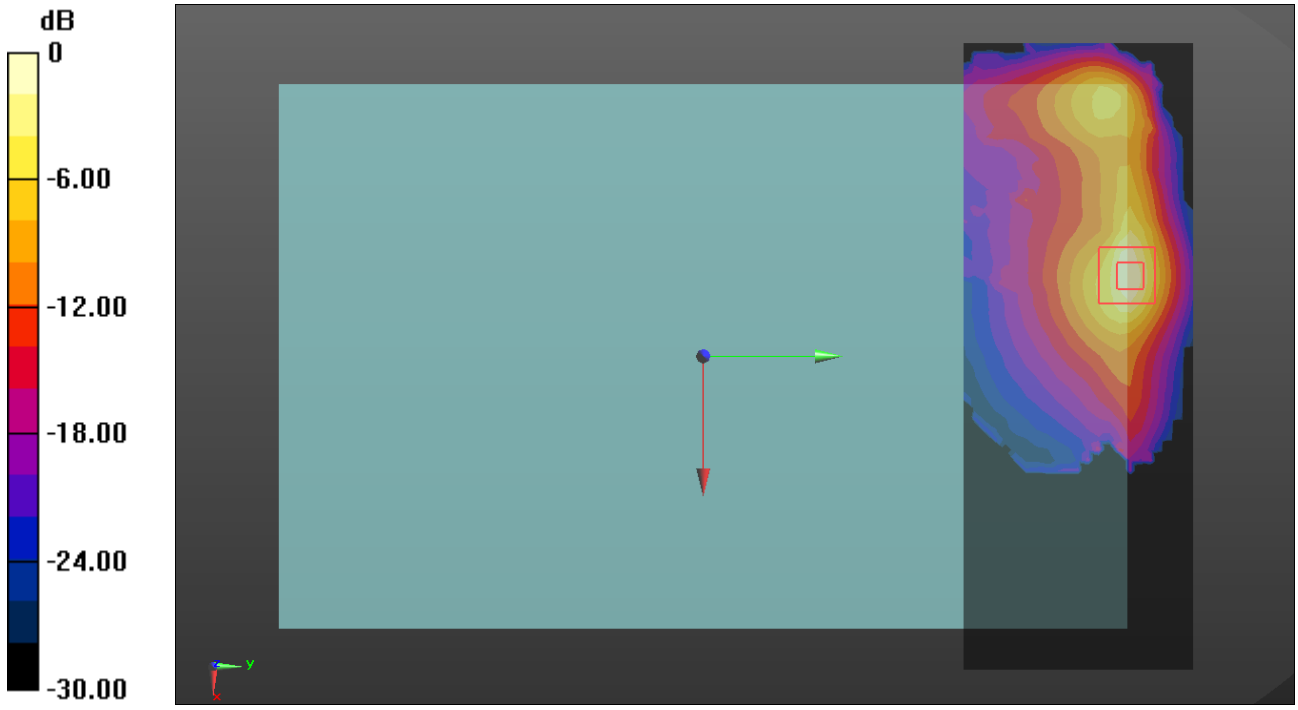

0 dB = 2.18 W/kg = 3.38 dBW/kg

NR Band n66 + DTS MIMO

Multi-Band Average SAR
Multi-Band Configurations:

DASY Configuration for Volume scan/QPSK RB 1/1 ch.349000/Volume Scan:

Date/Time: 11/15/2021, Test Laboratory: UL Korea, Ltd. Suwon Laboratory
Communication System: UID 0, NR (0); Frequency: 1745 MHz; Duty Cycle: 1:1; PMF: 1.12202e-005
Medium: HSL 1700 Medium parameters used: f = 1745 MHz; σ = 1.383 S/m; ε_r = 41.342; ρ = 1000 kg/m^3
Measurement Standard: DASY5 (IEEE/IEC/ANSI C63.19-2011)

- Probe: EX3DV4 - SN7645; ConvF(9.3, 9.3, 9.3) @ 1745 MHz; Calibrated: 4/15/2021
- Sensor-Surface: 1.4mm (Mechanical Surface Detection)
- Electronics: DAE4 Sn1468; Calibrated: 9/27/2021
- Phantom: ELI v6.0; Type: QDOVA003AA; Serial: TP:2005
- Measurement SW: DASY52, Version 52.10 (3)

DASY Configuration for Volume scan/802.11b mode ch.1 MIMO/Volume Scan:

Date/Time: 11/13/2021, Test Laboratory: UL Korea, Ltd. Suwon Laboratory
Communication System: UID 0, IEEE 802.11b/g/n 2.4 GHz Band (0); Frequency: 2412 MHz; Duty Cycle: 1:1; PMF: 1
Medium: HSL 2450 Medium parameters used (interpolated): f = 2412 MHz; σ = 1.814 S/m; ε_r = 39.822; ρ = 1000 kg/m^3
Measurement Standard: DASY5 (IEEE/IEC/ANSI C63.19-2011)

- Probe: EX3DV4 - SN7645; ConvF(8.26, 8.26, 8.26) @ 2412 MHz; Calibrated: 4/15/2021
- Sensor-Surface: 1.4mm (Mechanical Surface Detection)
- Electronics: DAE4 Sn1468; Calibrated: 9/27/2021
- Phantom: ELI v6.0; Type: QDOVA003AA; Serial: TP:2005
- Measurement SW: DASY52, Version 52.10 (3)

Multi Band Result:
SAR(1 g) = 0.743 W/kg; SAR(10 g) = 0.313 W/kg
Maximum value of SAR (interpolated) = 2.21 W/kg

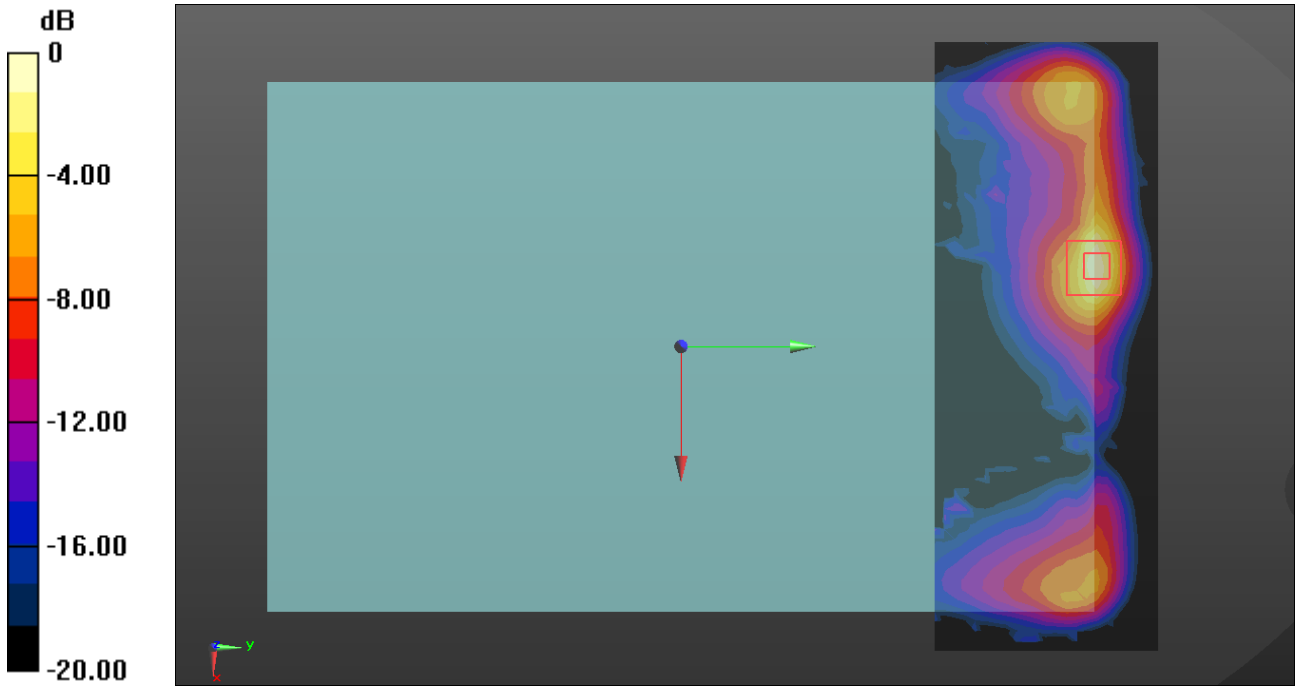

0 dB = 2.21 W/kg = 3.44 dBW/kg

LTE Band 2 + NR Band n5

Multi-Band Average SAR
Multi-Band Configurations:

DASY Configuration for Volume scan/QPSK RB 50/24 ch.18700/Volume Scan:

Date/Time: 11/21/2021, Test Laboratory: UL Korea, Ltd. Suwon Laboratory
Communication System: UID 0, LTE (FDD) (0); Frequency: 1860 MHz; Duty Cycle: 1:1; PMF: 1
Medium: HSL1900 Medium parameters used: f = 1860 MHz; σ = 1.401 S/m; ε_r = 39.247; ρ = 1000 kg/m^3
Measurement Standard: DASY5 (IEEE/IEC/ANSI C63.19-2011)

- Probe: EX3DV4 - SN7645; ConvF(8.9, 8.9, 8.9) @ 1860 MHz; Calibrated: 4/15/2021
- Sensor-Surface: 1.4mm (Mechanical Surface Detection)
- Electronics: DAE4 Sn1468; Calibrated: 9/27/2021
- Phantom: ELI v6.0; Type: QDOVA003AA; Serial: TP:2005
- Measurement SW: DASY52, Version 52.10 (3)

DASY Configuration for Volume scan/QPSK RB 1/53 ch.167300/Volume Scan:

Date/Time: 11/22/2021, Test Laboratory: UL Korea, Ltd. Suwon Laboratory
Communication System: UID 0, NR (0); Frequency: 836.5 MHz; Duty Cycle: 1:1; PMF: 1.12202e-005
Medium: HSL835 Medium parameters used (interpolated): f = 836.5 MHz; σ = 0.896 S/m; ε_r = 41.343; ρ = 1000 kg/m^3
Measurement Standard: DASY5 (IEEE/IEC/ANSI C63.19-2011)

- Probe: EX3DV4 - SN7645; ConvF(10.56, 10.56, 10.56) @ 836.5 MHz; Calibrated: 4/15/2021
- Sensor-Surface: 1.4mm (Mechanical Surface Detection)
- Electronics: DAE4 Sn1468; Calibrated: 9/27/2021
- Phantom: ELI v6.0; Type: QDOVA003AA; Serial: TP:2005
- Measurement SW: DASY52, Version 52.10 (3)

Multi Band Result:
SAR(1 g) = 0.600 W/kg; SAR(10 g) = 0.259 W/kg
Maximum value of SAR (interpolated) = 1.52 W/kg

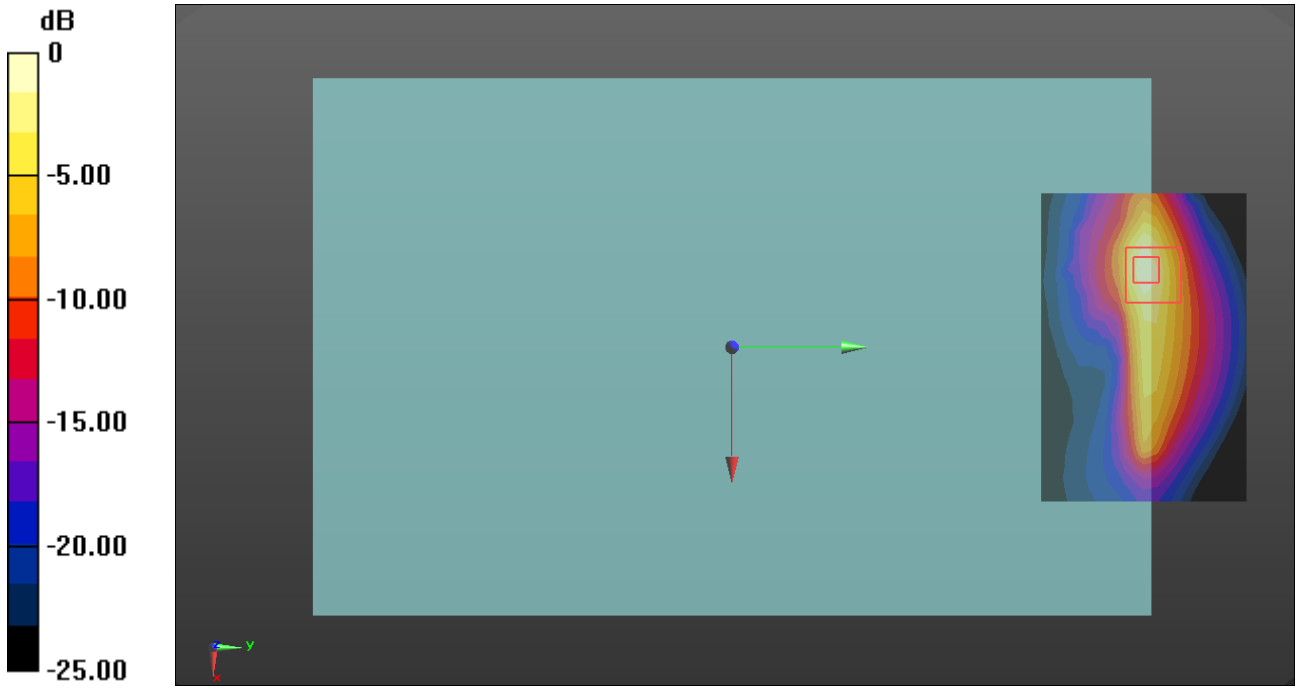

0 dB = 1.52 W/kg = 1.82 dBW/kg

LTE Band 66 + NR Band 5

Multi-Band Average SAR
Multi-Band Configurations:

DASY Configuration for Volume scan/QPSK RB 1/49 ch.132322/Volume Scan:
Date/Time: 11/22/2021, Test Laboratory: UL Korea, Ltd. Suwon Laboratory
Communication System: UID 0, LTE (FDD) (0); Frequency: 1745 MHz; Duty Cycle: 1:1; PMF: 1
Medium: HSL1750 Medium parameters used: f = 1745 MHz; σ = 1.354 S/m; ε_r = 39.468; ρ = 1000 kg/m^3
Measurement Standard: DASY5 (IEEE/IEC/ANSI C63.19-2011)

- Probe: EX3DV4 - SN7645; ConvF(9.3, 9.3, 9.3) @ 1745 MHz; Calibrated: 4/15/2021
- Sensor-Surface: 1.4mm (Mechanical Surface Detection)
- Electronics: DAE4 Sn1468; Calibrated: 9/27/2021
- Phantom: ELI v6.0; Type: QDOVA003AA; Serial: TP:2005
- Measurement SW: DASY52, Version 52.10 (3)

DASY Configuration for Volumes can/QPSK RB 1/53 ch.167300/Volume Scan:

Date/Time: 11/22/2021, Test Laboratory: UL Korea, Ltd. Suwon Laboratory
Communication System: UID 0, NR (0); Frequency: 836.5 MHz; Duty Cycle: 1:1; PMF: 1.12202e-005
Medium: HSL835 Medium parameters used (interpolated): f = 836.5 MHz; σ = 0.896 S/m; ε_r = 41.343; ρ = 1000 kg/m^3
Measurement Standard: DASY5 (IEEE/IEC/ANSI C63.19-2011)

- Probe: EX3DV4 - SN7645; ConvF(10.56, 10.56, 10.56) @ 836.5 MHz; Calibrated: 4/15/2021
- Sensor-Surface: 1.4mm (Mechanical Surface Detection)
- Electronics: DAE4 Sn1468; Calibrated: 9/27/2021
- Phantom: ELI v6.0; Type: QDOVA003AA; Serial: TP:2005
- Measurement SW: DASY52, Version 52.10 (3)

Multi Band Result:
SAR(1 g) = 0.460 W/kg; SAR(10 g) = 0.226 W/kg
Maximum value of SAR (interpolated) = 1.05 W/kg

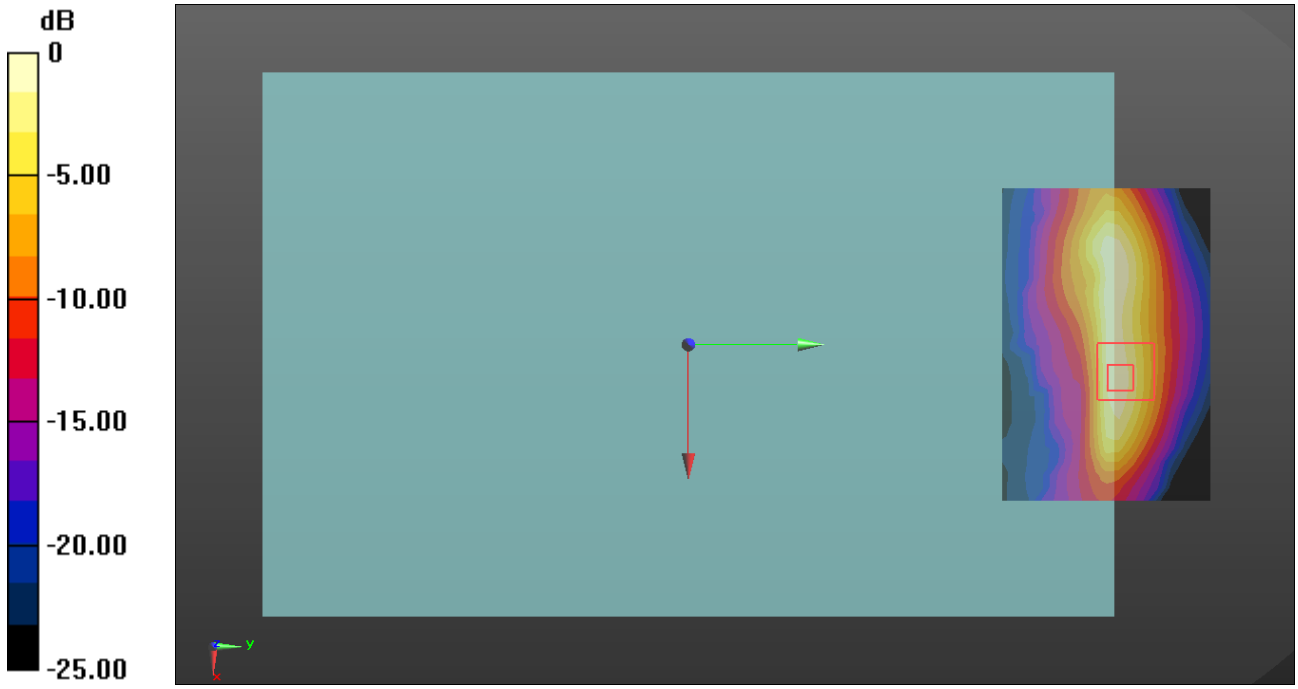

0 dB = 1.05 W/kg = 0.21 dBW/kg

LTE Band 5 + NR Band n66

Multi-Band Average SAR
Multi-Band Configurations:

DASY Configuration for Configuration/QPSK RB 1/25 ch.20525/Volume Scan:

Date/Time: 11/23/2021, Test Laboratory: UL Korea, Ltd. Suwon Laboratory
Communication System: UID 0, LTE (FDD) (0); Frequency: 836.5 MHz; Duty Cycle: 1:1; PMF: 1
Medium: HSL 750 Medium parameters used (interpolated): f = 836.5 MHz; σ = 0.896 S/m; ε_r = 41.343; ρ = 1000 kg/m^3
Measurement Standard: DASY5 (IEEE/IEC/ANSI C63.19-2011)

- Probe: EX3DV4 - SN7645; ConvF(10.56, 10.56, 10.56) @ 836.5 MHz; Calibrated: 4/15/2021
- Sensor-Surface: 1.4mm (Mechanical Surface Detection)
- Electronics: DAE4 Sn1468; Calibrated: 9/27/2021
- Phantom: ELI v6.0; Type: QDOVA003AA; Serial: TP:2005
- Measurement SW: DASY52, Version 52.10 (3)

DASY Configuration for Volume scan/QPSK RB 1/1 ch.349000/Volume Scan:

Date/Time: 11/23/2021, Test Laboratory: UL Korea, Ltd. Suwon Laboratory
Communication System: UID 0, NR (0); Frequency: 1745 MHz; Duty Cycle: 1:1; PMF: 1.12202e-005
Medium: HSL1750 Medium parameters used: f = 1745 MHz; σ = 1.354 S/m; ε_r = 39.468; ρ = 1000 kg/m^3
Measurement Standard: DASY5 (IEEE/IEC/ANSI C63.19-2011)

- Probe: EX3DV4 - SN7645; ConvF(9.3, 9.3, 9.3) @ 1745 MHz; Calibrated: 4/15/2021
- Sensor-Surface: 1.4mm (Mechanical Surface Detection)
- Electronics: DAE4 Sn1468; Calibrated: 9/27/2021
- Phantom: ELI v6.0; Type: QDOVA003AA; Serial: TP:2005
- Measurement SW: DASY52, Version 52.10 (3)

Multi Band Result:
SAR(1 g) = 0.486 W/kg; SAR(10 g) = 0.226 W/kg
Maximum value of SAR (interpolated) = 1.09 W/kg

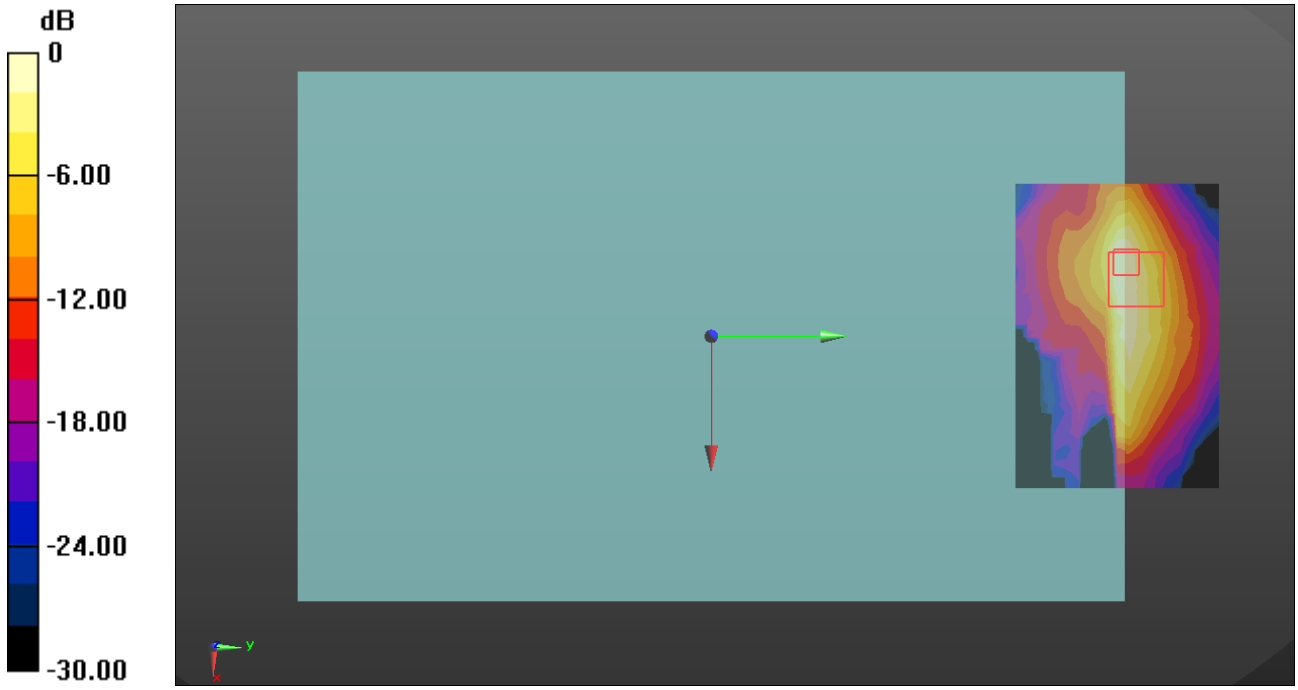

0 dB = 1.09 W/kg = 0.37 dBW/kg

LTE Band 12 + NR Band n66

Multi-Band Average SAR
Multi-Band Configurations:

DASY Configuration for Configuration/QPSK RB 25/12 ch.23095/Volume Scan:

Date/Time: 11/23/2021, Test Laboratory: UL Korea, Ltd. Suwon Laboratory
Communication System: UID 0, LTE (FDD) (0); Frequency: 707.5 MHz; Duty Cycle: 1:1; PMF: 1
Medium: HSL 750 Medium parameters used (interpolated): f = 707.5 MHz; σ = 0.869 S/m; ε_r = 40.883; ρ = 1000 kg/m^3
Measurement Standard: DASY5 (IEEE/IEC/ANSI C63.19-2011)

- Probe: EX3DV4 - SN7645; ConvF(10.76, 10.76, 10.76) @ 707.5 MHz; Calibrated: 4/15/2021
- Sensor-Surface: 1.4mm (Mechanical Surface Detection)
- Electronics: DAE4 Sn1468; Calibrated: 9/27/2021
- Phantom: ELI v6.0; Type: QDOVA003AA; Serial: TP:2005
- Measurement SW: DASY52, Version 52.10 (3)

DASY Configuration for Volume scan/QPSK RB 1/1 ch.349000/Volume Scan:

Date/Time: 11/23/2021, Test Laboratory: UL Korea, Ltd. Suwon Laboratory
Communication System: UID 0, NR (0); Frequency: 1745 MHz; Duty Cycle: 1:1; PMF: 1.12202e-005
Medium: HSL1750 Medium parameters used: f = 1745 MHz; σ = 1.354 S/m; ε_r = 39.468; ρ = 1000 kg/m^3
Measurement Standard: DASY5 (IEEE/IEC/ANSI C63.19-2011)

- Probe: EX3DV4 - SN7645; ConvF(9.3, 9.3, 9.3) @ 1745 MHz; Calibrated: 4/15/2021
- Sensor-Surface: 1.4mm (Mechanical Surface Detection)
- Electronics: DAE4 Sn1468; Calibrated: 9/27/2021
- Phantom: ELI v6.0; Type: QDOVA003AA; Serial: TP:2005
- Measurement SW: DASY52, Version 52.10 (3)

Multi Band Result:
SAR(1 g) = 0.449 W/kg; SAR(10 g) = 0.213 W/kg
Maximum value of SAR (interpolated) = 1.10 W/kg

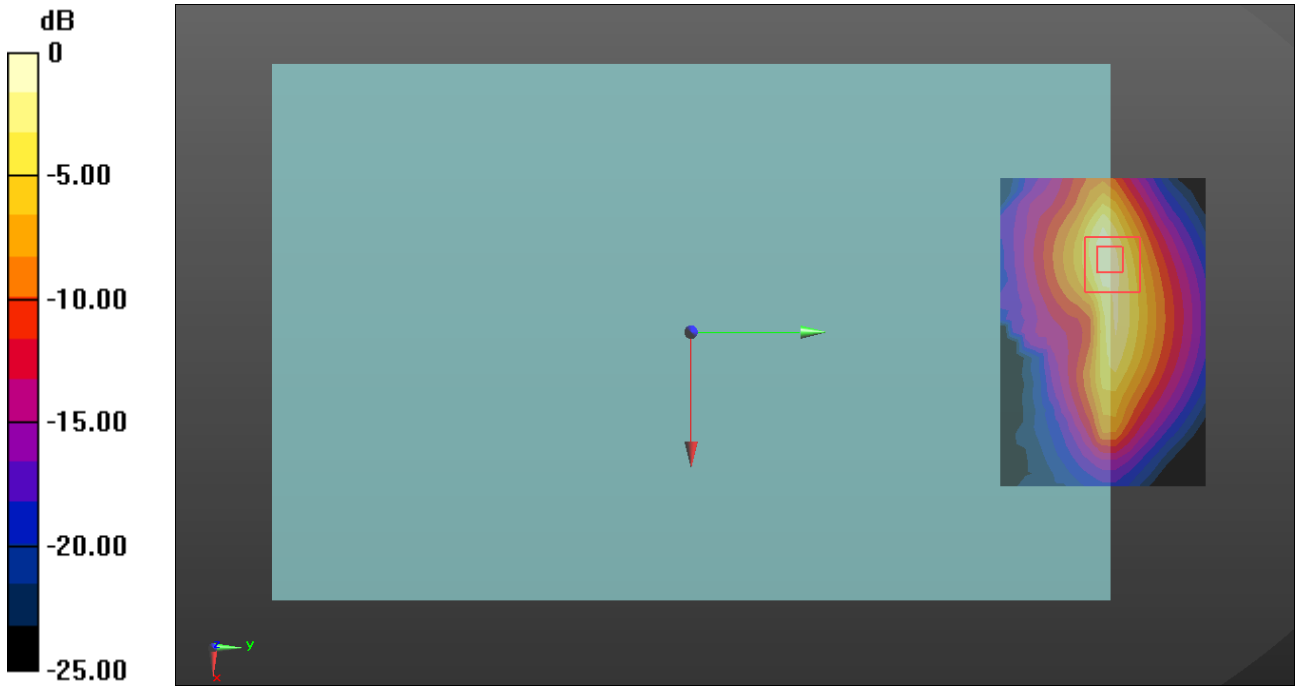

0 dB = 1.10 W/kg = 0.41 dBW/kg

LTE Band 13 + NR Band n66

Multi-Band Average SAR
Multi-Band Configurations:

DASY Configuration for Configuration/QPSK RB 1/25 ch.23230/Volume Scan:

Date/Time: 11/23/2021, Test Laboratory: UL Korea, Ltd. Suwon Laboratory
Communication System: UID 0, LTE (FDD) (0); Frequency: 782 MHz; Duty Cycle: 1:1; PMF: 1
Medium: HSL 750 Medium parameters used (interpolated): f = 782 MHz; σ = 0.884 S/m; ε_r = 40.864; ρ = 1000 kg/m^3
Measurement Standard: DASY5 (IEEE/IEC/ANSI C63.19-2011)

- Probe: EX3DV4 - SN7645; ConvF(10.76, 10.76, 10.76) @ 782 MHz; Calibrated: 4/15/2021
- Sensor-Surface: 1.4mm (Mechanical Surface Detection)
- Electronics: DAE4 Sn1468; Calibrated: 9/27/2021
- Phantom: ELI v6.0; Type: QDOVA003AA; Serial: TP:2005
- Measurement SW: DASY52, Version 52.10 (3)

DASY Configuration for Volume scan/QPSK RB 1/1 ch.349000/Volume Scan:

Date/Time: 11/23/2021, Test Laboratory: UL Korea, Ltd. Suwon Laboratory
Communication System: UID 0, NR (0); Frequency: 1745 MHz; Duty Cycle: 1:1; PMF: 1.12202e-005
Medium: HSL1750 Medium parameters used: f = 1745 MHz; σ = 1.354 S/m; ε_r = 39.468; ρ = 1000 kg/m^3
Measurement Standard: DASY5 (IEEE/IEC/ANSI C63.19-2011)

- Probe: EX3DV4 - SN7645; ConvF(9.3, 9.3, 9.3) @ 1745 MHz; Calibrated: 4/15/2021
- Sensor-Surface: 1.4mm (Mechanical Surface Detection)
- Electronics: DAE4 Sn1468; Calibrated: 9/27/2021
- Phantom: ELI v6.0; Type: QDOVA003AA; Serial: TP:2005
- Measurement SW: DASY52, Version 52.10 (3)

Multi Band Result:
SAR(1 g) = 0.490 W/kg; SAR(10 g) = 0.234 W/kg
Maximum value of SAR (interpolated) = 1.15 W/kg

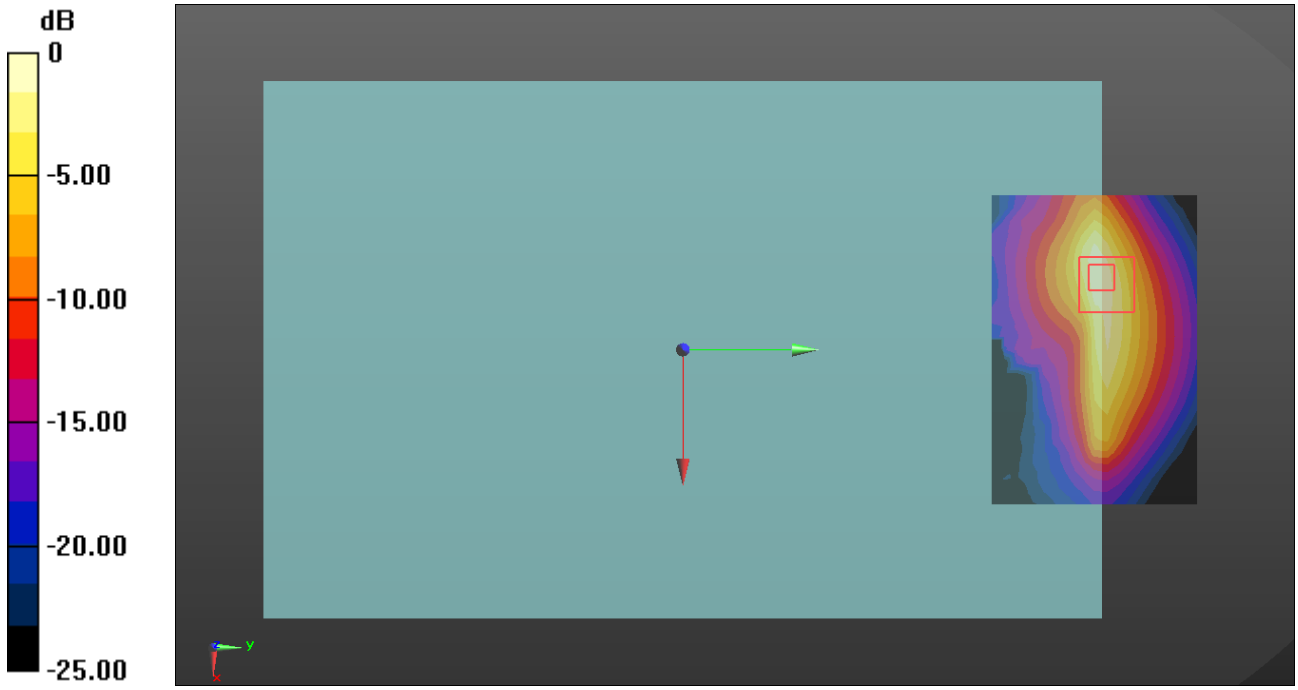

0 dB = 1.15 W/kg = 0.61 dBW/kg

LTE Band 25(2) + NR Band n5

Multi-Band Average SAR
Multi-Band Configurations:

DASY Configuration for Volume scan/QPSK RB 1/49 ch.26590/Volume Scan:

Date/Time: 11/23/2021, Test Laboratory: UL Korea, Ltd. Suwon Laboratory
Communication System: UID 0, LTE (FDD) (0); Frequency: 1905 MHz; Duty Cycle: 1:1; PMF: 1
Medium: HSL 1900 Medium parameters used: f = 1905 MHz; σ = 1.414 S/m; ε_r = 39.241; ρ = 1000 kg/m^3
Measurement Standard: DASY5 (IEEE/IEC/ANSI C63.19-2011)

- Probe: EX3DV4 - SN7645; ConvF(8.9, 8.9, 8.9) @ 1905 MHz; Calibrated: 4/15/2021
- Sensor-Surface: 1.4mm (Mechanical Surface Detection)
- Electronics: DAE4 Sn1468; Calibrated: 9/27/2021
- Phantom: ELI v6.0; Type: QDOVA003AA; Serial: TP:2005
- Measurement SW: DASY52, Version 52.10 (3)

DASY Configuration for Volume scan/QPSK RB 1/53 ch.167300/Volume Scan:

Date/Time: 11/24/2021, Test Laboratory: UL Korea, Ltd. Suwon Laboratory
Communication System: UID 0, NR (0); Frequency: 836.5 MHz; Duty Cycle: 1:1; PMF: 1.12202e-005
Medium: HSL 835 Medium parameters used (interpolated): f = 836.5 MHz; σ = 0.896 S/m; ε_r = 41.343; ρ = 1000 kg/m^3
Measurement Standard: DASY5 (IEEE/IEC/ANSI C63.19-2011)

- Probe: EX3DV4 - SN7645; ConvF(10.56, 10.56, 10.56) @ 836.5 MHz; Calibrated: 4/15/2021
- Sensor-Surface: 1.4mm (Mechanical Surface Detection)
- Electronics: DAE4 Sn1468; Calibrated: 9/27/2021
- Phantom: ELI v6.0; Type: QDOVA003AA; Serial: TP:2005
- Measurement SW: DASY52, Version 52.10 (3)

Multi Band Result:
SAR(1 g) = 0.984 W/kg; SAR(10 g) = 0.610 W/kg
Maximum value of SAR (interpolated) = 1.56 W/kg

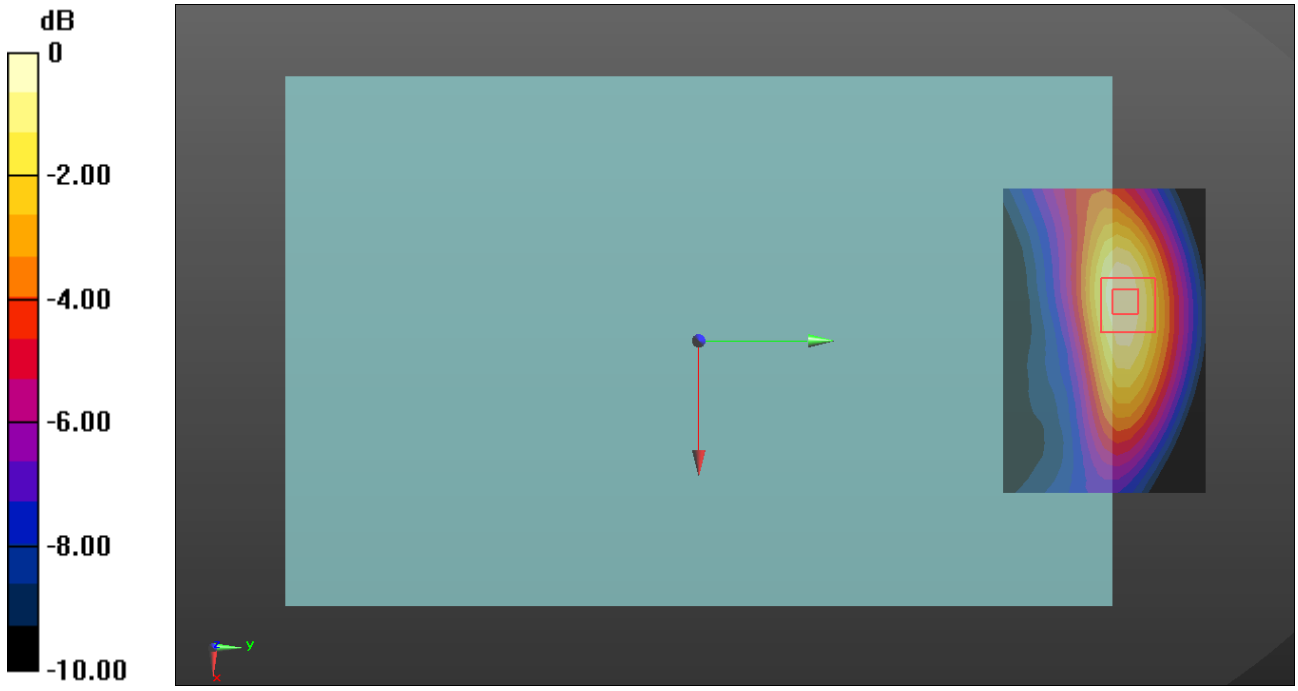

0 dB = 1.56 W/kg = 1.93 dBW/kg

LTE Band 66 + NR Band n5

Multi-Band Average SAR
Multi-Band Configurations

DASY Configuration for Volume scan/QPSK RB 1/49 ch.132322/Volume Scan:

Date/Time: 11/24/2021, Test Laboratory: UL Korea, Ltd. Suwon Laboratory
Communication System: UID 0, LTE (FDD) (0); Frequency: 1745 MHz; Duty Cycle: 1:1; PMF: 1
Medium: HSL 1750 Medium parameters used: f = 1745 MHz; σ = 1.328 S/m; ε_r = 39.527; ρ = 1000 kg/m^3
Measurement Standard: DASY5 (IEEE/IEC/ANSI C63.19-2011)

- Probe: EX3DV4 - SN7645; ConvF(9.3, 9.3, 9.3) @ 1745 MHz; Calibrated: 4/15/2021
- Sensor-Surface: 1.4mm (Mechanical Surface Detection)
- Electronics: DAE4 Sn1468; Calibrated: 9/27/2021
- Phantom: ELI v6.0; Type: QDOVA003AA; Serial: TP:2005
- Measurement SW: DASY52, Version 52.10 (3)

DASY Configuration for Volume scan/QPSK RB 1/53 ch.167300/Volume Scan:

Date/Time: 11/24/2021, Test Laboratory: UL Korea, Ltd. Suwon Laboratory
Communication System: UID 0, NR (0); Frequency: 836.5 MHz; Duty Cycle: 1:1; PMF: 1.12202e-005
Medium: HSL 835 Medium parameters used (interpolated): f = 836.5 MHz; σ = 0.896 S/m; ε_r = 41.343; ρ = 1000 kg/m^3
Measurement Standard: DASY5 (IEEE/IEC/ANSI C63.19-2011)

- Probe: EX3DV4 - SN7645; ConvF(10.56, 10.56, 10.56) @ 836.5 MHz; Calibrated: 4/15/2021
- Sensor-Surface: 1.4mm (Mechanical Surface Detection)
- Electronics: DAE4 Sn1468; Calibrated: 9/27/2021
- Phantom: ELI v6.0; Type: QDOVA003AA; Serial: TP:2005
- Measurement SW: DASY52, Version 52.10 (3)

Multi Band Result:
SAR(1 g) = 1.03 W/kg; SAR(10 g) = 0.646 W/kg
Maximum value of SAR (interpolated) = 1.64 W/kg

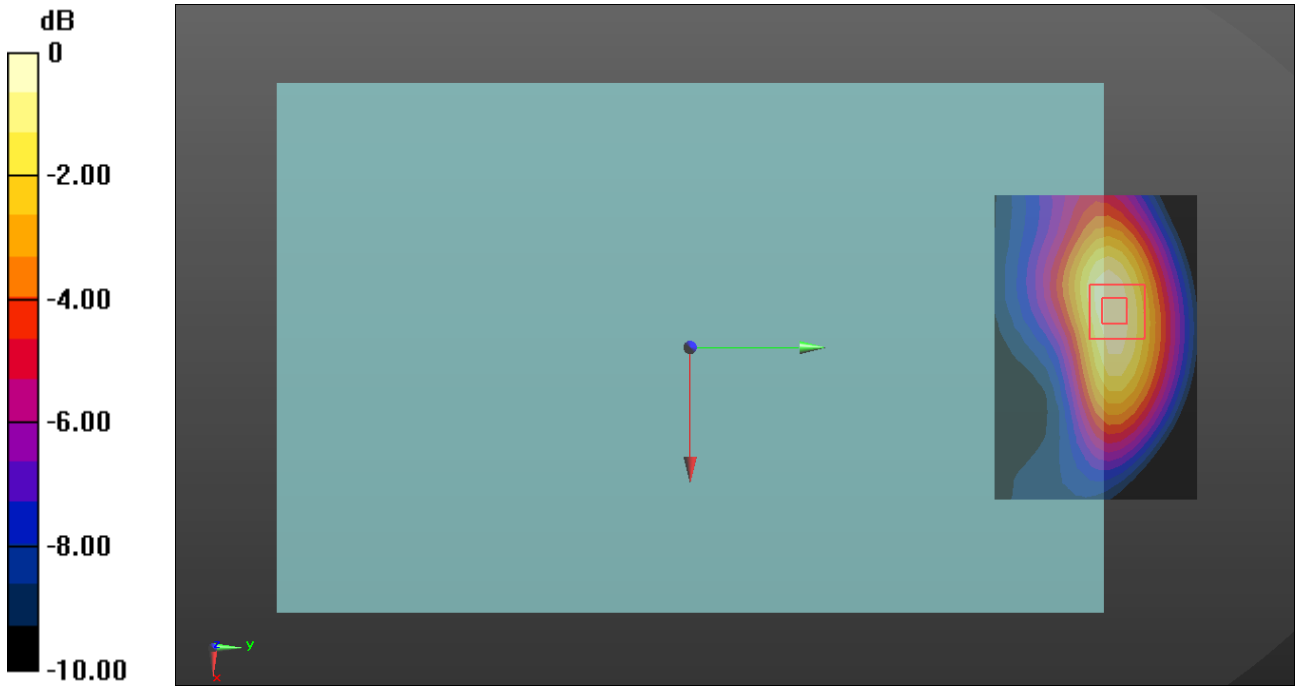

0 dB = 1.64 W/kg = 2.15 dBW/kg

LTE Band 26(5) + NR Band n66

Multi-Band Average SAR
Multi-Band Configurations:

DASY Configuration for Volume scan/QPSK RB 1/37 ch.26865/Volume Scan:

Date/Time: 11/23/2021, Test Laboratory: UL Korea, Ltd. Suwon Laboratory
Communication System: UID 0, LTE (FDD) (0); Frequency: 831.5 MHz; Duty Cycle: 1:1; PMF: 1
Medium: HSL 835 Medium parameters used (interpolated): f = 831.5 MHz; σ = 0.897 S/m; ε_r = 41.331; ρ = 1000 kg/m^3
Measurement Standard: DASY5 (IEEE/IEC/ANSI C63.19-2011)

- Probe: EX3DV4 - SN7645; ConvF(10.56, 10.56, 10.56) @ 831.5 MHz; Calibrated: 4/15/2021
- Sensor-Surface: 1.4mm (Mechanical Surface Detection)
- Electronics: DAE4 Sn1468; Calibrated: 9/27/2021
- Phantom: ELI v6.0; Type: QDOVA003AA; Serial: TP:2005
- Measurement SW: DASY52, Version 52.10 (3)

DASY Configuration for Volume scan/QPSK RB 50/25 ch.349000/Volume Scan:

Date/Time: 11/24/2021, Test Laboratory: UL Korea, Ltd. Suwon Laboratory
Communication System: UID 0, NR (0); Frequency: 1745 MHz; Duty Cycle: 1:1; PMF: 1.12202e-005
Medium: HSL 1750 Medium parameters used: f = 1745 MHz; σ = 1.328 S/m; ε_r = 39.527; ρ = 1000 kg/m^3
Measurement Standard: DASY5 (IEEE/IEC/ANSI C63.19-2011)

- Probe: EX3DV4 - SN7645; ConvF(9.3, 9.3, 9.3) @ 1745 MHz; Calibrated: 4/15/2021
- Sensor-Surface: 1.4mm (Mechanical Surface Detection)
- Electronics: DAE4 Sn1468; Calibrated: 9/27/2021
- Phantom: ELI v6.0; Type: QDOVA003AA; Serial: TP:2005
- Measurement SW: DASY52, Version 52.10 (3)

Multi Band Result:
SAR(1 g) = 1.11 W/kg; SAR(10 g) = 0.699 W/kg
Maximum value of SAR (interpolated) = 1.77 W/kg

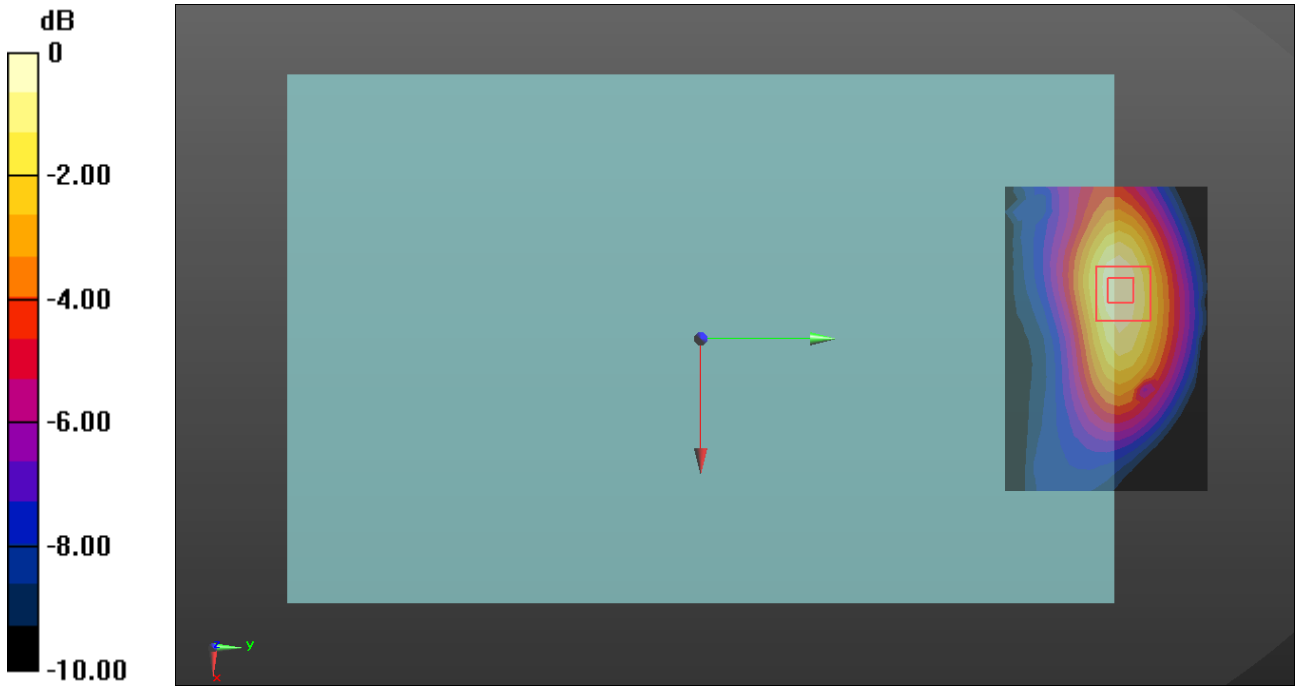

0 dB = 1.77 W/kg = 2.48 dBW/kg

LTE Band 12 + NR Band n66

Multi-Band Average SAR
Multi-Band Configurations:

DASY Configuration for Volume scan/QPSK RB 1/0 ch.20395/Volume Scan:

Date/Time: 11/23/2021, Test Laboratory: UL Korea, Ltd. Suwon Laboratory
Communication System: UID 0, LTE (FDD) (0); Frequency: 707.5 MHz; Duty Cycle: 1:1; PMF: 1
Medium: HSL 750 Medium parameters used (interpolated): f = 707.5 MHz; σ = 0.869 S/m; ε_r = 40.883; ρ = 1000 kg/m^3
Measurement Standard: DASY5 (IEEE/IEC/ANSI C63.19-2011)

- Probe: EX3DV4 - SN7645; ConvF(10.76, 10.76, 10.76) @ 707.5 MHz; Calibrated: 4/15/2021
- Sensor-Surface: 1.4mm (Mechanical Surface Detection)
- Electronics: DAE4 Sn1468; Calibrated: 9/27/2021
- Phantom: ELI v6.0; Type: QDOVA003AA; Serial: TP:2005
- Measurement SW: DASY52, Version 52.10 (3)

DASY Configuration for Volume scan/QPSK RB 50/25 ch.349000/Volume Scan:

Date/Time: 11/24/2021, Test Laboratory: UL Korea, Ltd. Suwon Laboratory
Communication System: UID 0, NR (0); Frequency: 1745 MHz; Duty Cycle: 1:1; PMF: 1.12202e-005
Medium: HSL 1750 Medium parameters used: f = 1745 MHz; σ = 1.328 S/m; ε_r = 39.527; ρ = 1000 kg/m^3
Measurement Standard: DASY5 (IEEE/IEC/ANSI C63.19-2011)

- Probe: EX3DV4 - SN7645; ConvF(9.3, 9.3, 9.3) @ 1745 MHz; Calibrated: 4/15/2021
- Sensor-Surface: 1.4mm (Mechanical Surface Detection)
- Electronics: DAE4 Sn1468; Calibrated: 9/27/2021
- Phantom: ELI v6.0; Type: QDOVA003AA; Serial: TP:2005
- Measurement SW: DASY52, Version 52.10 (3)

Multi Band Result:
SAR(1 g) = 0.917 W/kg; SAR(10 g) = 0.579 W/kg
Maximum value of SAR (interpolated) = 1.47 W/kg

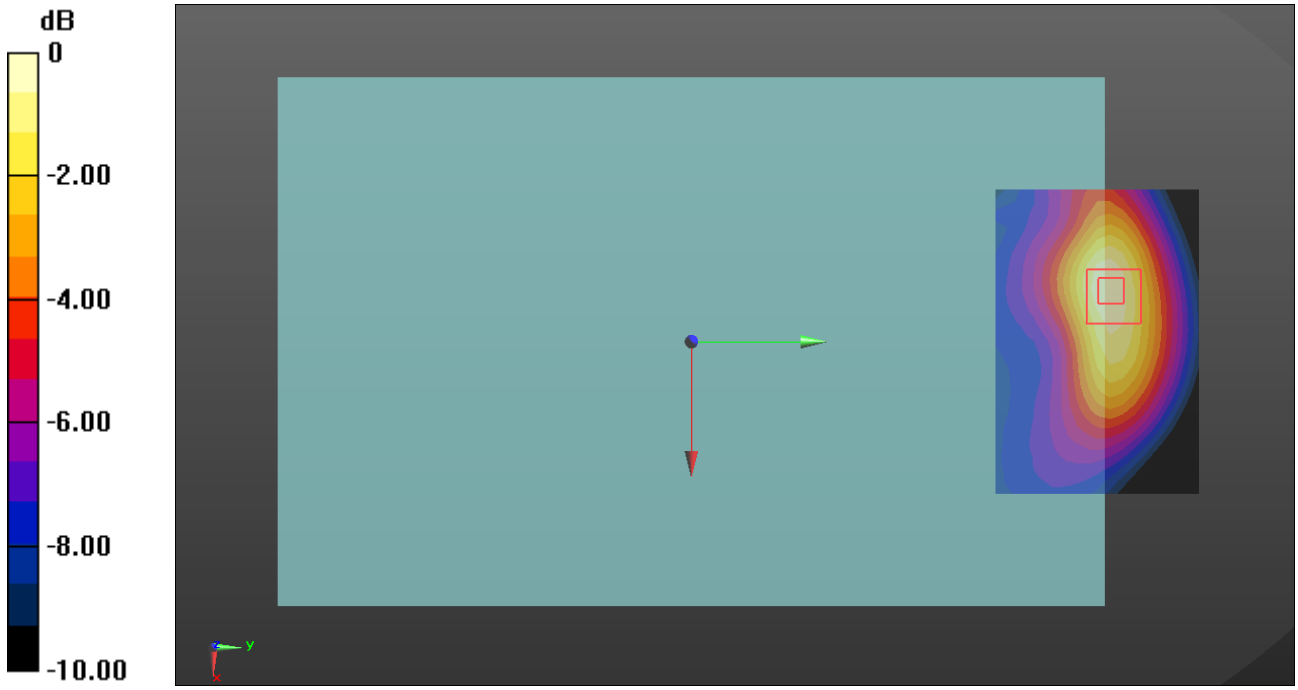

0 dB = 1.47 W/kg = 1.67 dBW/kg

LTE Band 13 + NR Band n66

Multi-Band Average SAR
Multi-Band Configurations:

DASY Configuration for Volume scan/QPSK RB 1/25 ch.23230/Volume Scan:

Date/Time: 11/23/2021, Test Laboratory: UL Korea, Ltd. Suwon Laboratory
Communication System: UID 0, LTE (FDD) (0); Frequency: 782 MHz; Duty Cycle: 1:1; PMF: 1
Medium: HSL 750 Medium parameters used (interpolated): f = 782 MHz; σ = 0.884 S/m; ε_r = 40.864; ρ = 1000 kg/m^3
Measurement Standard: DASY5 (IEEE/IEC/ANSI C63.19-2011)

- Probe: EX3DV4 - SN7645; ConvF(10.76, 10.76, 10.76) @ 782 MHz; Calibrated: 4/15/2021
- Sensor-Surface: 1.4mm (Mechanical Surface Detection)
- Electronics: DAE4 Sn1468; Calibrated: 9/27/2021
- Phantom: ELI v6.0; Type: QDOVA003AA; Serial: TP:2005
- Measurement SW: DASY52, Version 52.10 (3)

DASY Configuration for Volume scan/QPSK RB 50/25 ch.349000/Volume Scan:

Date/Time: 11/24/2021, Test Laboratory: UL Korea, Ltd. Suwon Laboratory
Communication System: UID 0, NR (0); Frequency: 1745 MHz; Duty Cycle: 1:1; PMF: 1.12202e-005
Medium: HSL 1750 Medium parameters used: f = 1745 MHz; σ = 1.328 S/m; ε_r = 39.527; ρ = 1000 kg/m^3
Measurement Standard: DASY5 (IEEE/IEC/ANSI C63.19-2011)

- Probe: EX3DV4 - SN7645; ConvF(9.3, 9.3, 9.3) @ 1745 MHz; Calibrated: 4/15/2021
- Sensor-Surface: 1.4mm (Mechanical Surface Detection)
- Electronics: DAE4 Sn1468; Calibrated: 9/27/2021
- Phantom: ELI v6.0; Type: QDOVA003AA; Serial: TP:2005
- Measurement SW: DASY52, Version 52.10 (3)

Multi Band Result:
SAR(1 g) = 1.1 W/kg; SAR(10 g) = 0.689 W/kg
Maximum value of SAR (interpolated) = 1.74 W/kg

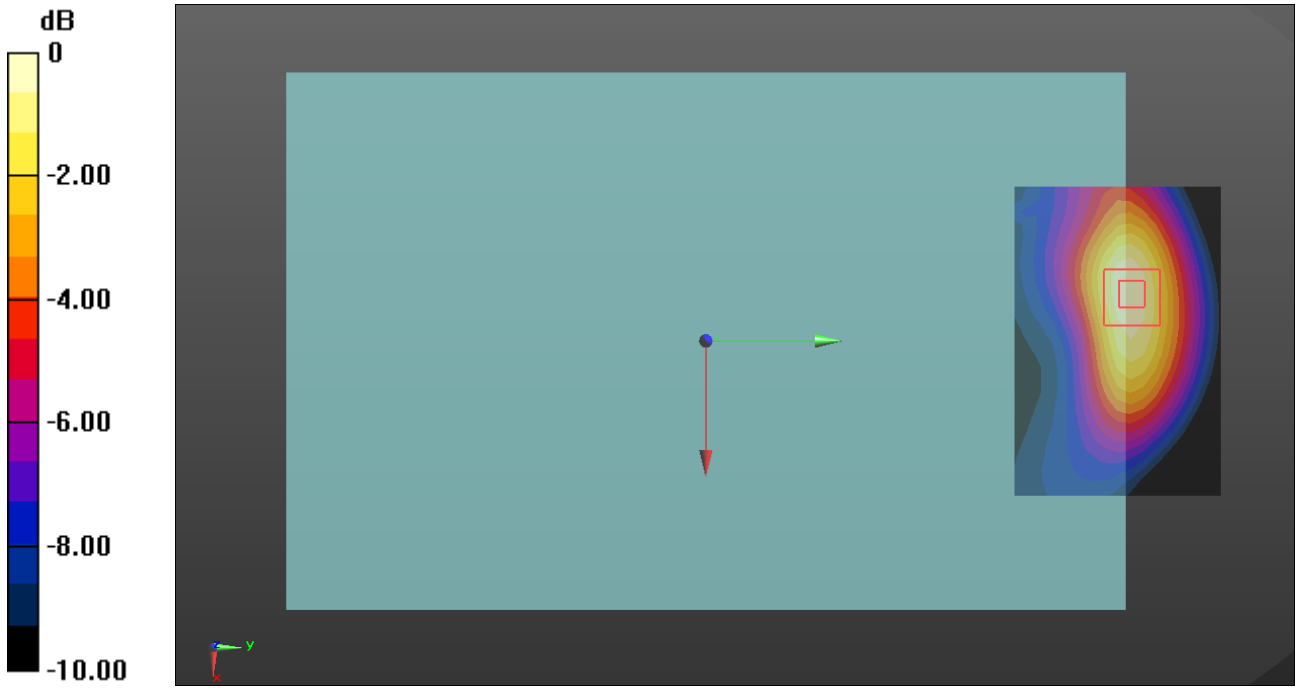

0 dB = 1.74 W/kg = 2.41 dBW/kg

UNII MIMO + BT Ant 2

Multi-Band Average SAR
Multi-Band Configurations:

DASY Configuration for Volume scan/802.11 ac mode ch.155/Volume Scan:

Date/Time: 11/17/2021, Test Laboratory: UL Korea, Ltd. Suwon Laboratory
Communication System: UID 0, IEEE 802.11a/n/ac 5 GHz Band (0); Frequency: 5775 MHz; Duty Cycle: 1:1; PMF: 1
Medium: HSL 3-6 GHz Medium parameters used: f = 5775 MHz; σ = 5.35 S/m; ε_r = 35.013; ρ = 1000 kg/m^3
Measurement Standard: DASY5 (IEEE/IEC/ANSI C63.19-2011)

- Probe: EX3DV4 - SN7314; ConvF(4.9, 4.9, 4.9) @ 5775 MHz; Calibrated: 5/31/2021
- Sensor-Surface: 1.4mm (Mechanical Surface Detection)
- Electronics: DAE4 Sn1343; Calibrated: 8/23/2021
- Phantom: ELI V6.0 (20deg probe tilt); Type: QD OVA 003 AA; Serial: 2013
- Measurement SW: DASY52, Version 52.10 (3)

DASY Configuration for Volume scan/GFSK ch.39/Volume Scan:

Date/Time: 11/12/2021, Test Laboratory: UL Korea, Ltd. Suwon Laboratory
Communication System: UID 0, Bluetooth (DH5) (0); Frequency: 2441 MHz; Duty Cycle: 1:1.29033; PMF: 1
Medium: HSL 2450 Medium parameters used (interpolated): f = 2441 MHz; σ = 1.836 S/m; ε_r = 39.761; ρ = 1000 kg/m^3
Measurement Standard: DASY5 (IEEE/IEC/ANSI C63.19-2011)

- Probe: EX3DV4 - SN7645; ConvF(8.26, 8.26, 8.26) @ 2441 MHz; Calibrated: 4/15/2021
- Sensor-Surface: 1.4mm (Mechanical Surface Detection)
- Electronics: DAE4 Sn1468; Calibrated: 9/27/2021
- Phantom: ELI v6.0; Type: QDOVA003AA; Serial: TP:2005
- Measurement SW: DASY52, Version 52.10 (3)

Multi Band Result:
SAR(1 g) = 1.26 W/kg; SAR(10 g) = 0.488 W/kg
Maximum value of SAR (interpolated) = 4.44 W/kg

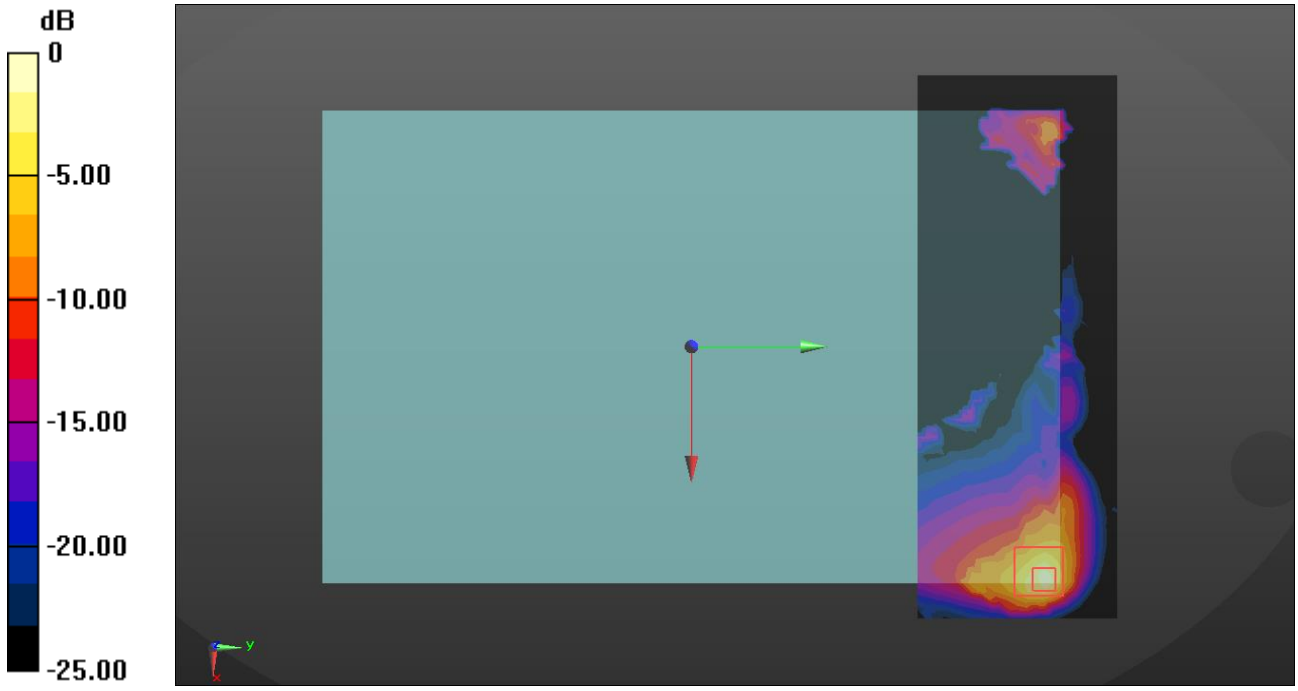

0 dB = 4.44 W/kg = 6.47 dBW/kg