CONFIDENTIAL

General

항 목	US PCS	CDMA	AMPS	GPS
Tx Freq. range	1851.25~ 1908.25MHz	824.70~ 848.31MHz	824.04 ~ 848.97MHz	-
Rx Freq. range	1930 ~ 1989.95MHz	869.04 ~ 893.97MHz	869.04 ~ 893.97MHz	1575.42MHz
Channel Bandwidth	1.23MHz	30KHz	30KHz	2MHz
Channel Spacing	50KHz	30KHz	30KHz	Not Used
Number of Channel	1200	832	832	1
Duplex Separation	80MHz	45MHz	45MHz	-
Type of Emission	1M25F9W	1M25F9W	40K0F8W,40K0F1D	-
In/Output Impedance	50Ω	50Ω	50Ω	50Ω
Tx Intermediate Frequency	263.6MHz	228.6MHz	228.6MHz	-
Rx Intermediate Frequency	183.6MHz	183.6MHz	183.6MHz	183.6MHz
Tx Local Frequency	1st(F_{TX}+263.6MHz) 2nd(527.2MHz)	1st(F_{TX}+228.6MHz) 2nd(457.2MHz)	1st(F_{TX}+228.6MHz) 2nd(457.2MHz)	-
Rx Local Frequency	1st(F_{RX}+183.6MHz) 2nd(367.2MHz)	1st(F_{RX}+183.6MHz) 2nd(367.2MHz)	1st(F_{RX}+183.6MHz) 2nd(367.2MHz)	1st(F_{RX}−183.6MHz) 2nd(367.2MHz)
TCXO Frequency	19.2MHz	19.2MHz	19.2MHz	19.2MHz
Freq. Stability	(F_{RX}−80MHz)±150Hz	(F_{RX}−45MHz)±300Hz	±2.5ppm	-
Operating Temperature	-30℃ ~ +60℃	-30℃ ~ +60℃	-30℃ ~ +60℃	-30℃ ~ +60℃
Supply Voltage	3.6 ~ 4.2V			
Size and Weight	STD : 70.8 * 47.3 * 6 mm, 38g, 900mAh EXT : 70.8 * 47.3 * 11.3mm, 46g, 1550mAh			

11.1 SAMPLE CALCULATIONS

A. Emission Designator

Emission Designator = 1M25F9W

CDMA BW = 1.25 MHz
F = Frequency Modulation
9 = Composite Digital Info
W = Combination (Audio/Data)
(Measured at the 99.75% power bandwidth)

Emission Designator = 40K0F8W

Calculation: Voice + SAT
Modulation: Voice is 2.5 kHz and SAT is 6 kHz – Maximum modulation is M = 6 kHz
Deviation: Voice is 12 kHz and SAT is 2 kHz – Maximum deviation is D = 12 + 2 = 14 kHz
Bn = 2xM + 2xDK with K = 1
Bn = 40 kHz

Calculation: Signaling Tone (ST) + SAT
Modulation: ST is 10 kHz and SAT is 6 kHz – Maximum modulation is M = 10 kHz
Deviation: ST is 8 kHz and SAT is 2 kHz – Maximum deviation is D = 8 + 2 = 10 kHz
Bn = 2xM + 2xDK with K = 1
Bn = 40 kHz

Emission Designator = 40K0F1D

Calculation: Voice + SAT
Modulation: Wideband Data is 10 kHz and SAT is 6 kHz – Maximum modulation is M = 10 kHz
Deviation: Wideband Data is 8 kHz and SAT is 2 kHz – Maximum deviation is D = 8 + 2 = 10 kHz
Bn = 2xM + 2xDK with K = 1
Bn = 40 kHz

B. Spurious Radiated Emission - PCS Band

Example: Channel 25 PCS Mode 2nd Harmonic (3702.50 MHz)

The receive analyzer reading at 3 meters with the EUT on the turntable was –81.0 dBm. The gain of the substituted antenna is 8.1 dBi. The signal generator connected to the substituted antenna terminals is adjusted to produce a reading of –81.0 dBm on the receive analyzer. The loss of the cable between the signal generator and the terminals of the substituted antenna is 2.0 dB at 3702.50 MHz. So 6.1 dB is added to the signal generator reading of –30.9 dBm yielding –24.80 dBm. The fundamental EIRP was 25.501 dBm so this harmonic was 25.501 dBm – (-24.80) = 50.3 dBc

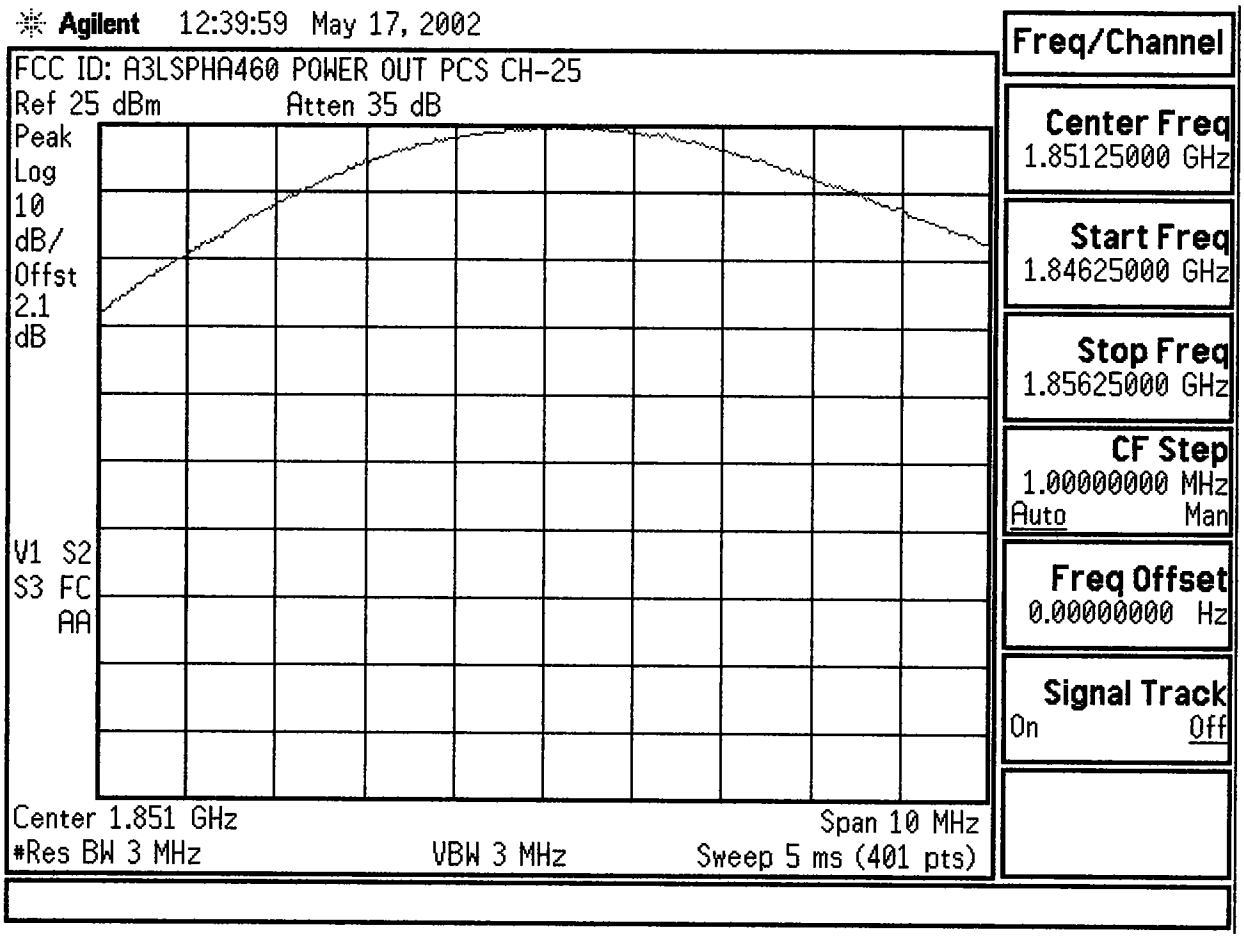
Agilent 12:39:59 May 17, 2002
FCC ID: A3LSPHA460 POWER OUT PCS CH-25
Ref 25 dBm
Atten 35 dB
Peak
Log
10
dB/
Offst
2.1
dB
V1 S2
S3 FC
AA
Center 1.851 GHz
Span 10 MHz
#Res BW 3 MHz
VBW 3 MHz
Sweep 5 ms (401 pts)
Freq/Channel
Center Freq
1.85125000 GHz
Start Freq
1.84625000 GHz
Stop Freq
1.85625000 GHz
CF Step
1.00000000 MHz
Auto
Man
Freq Offset
0.00000000 Hz
Signal Track
On
Off

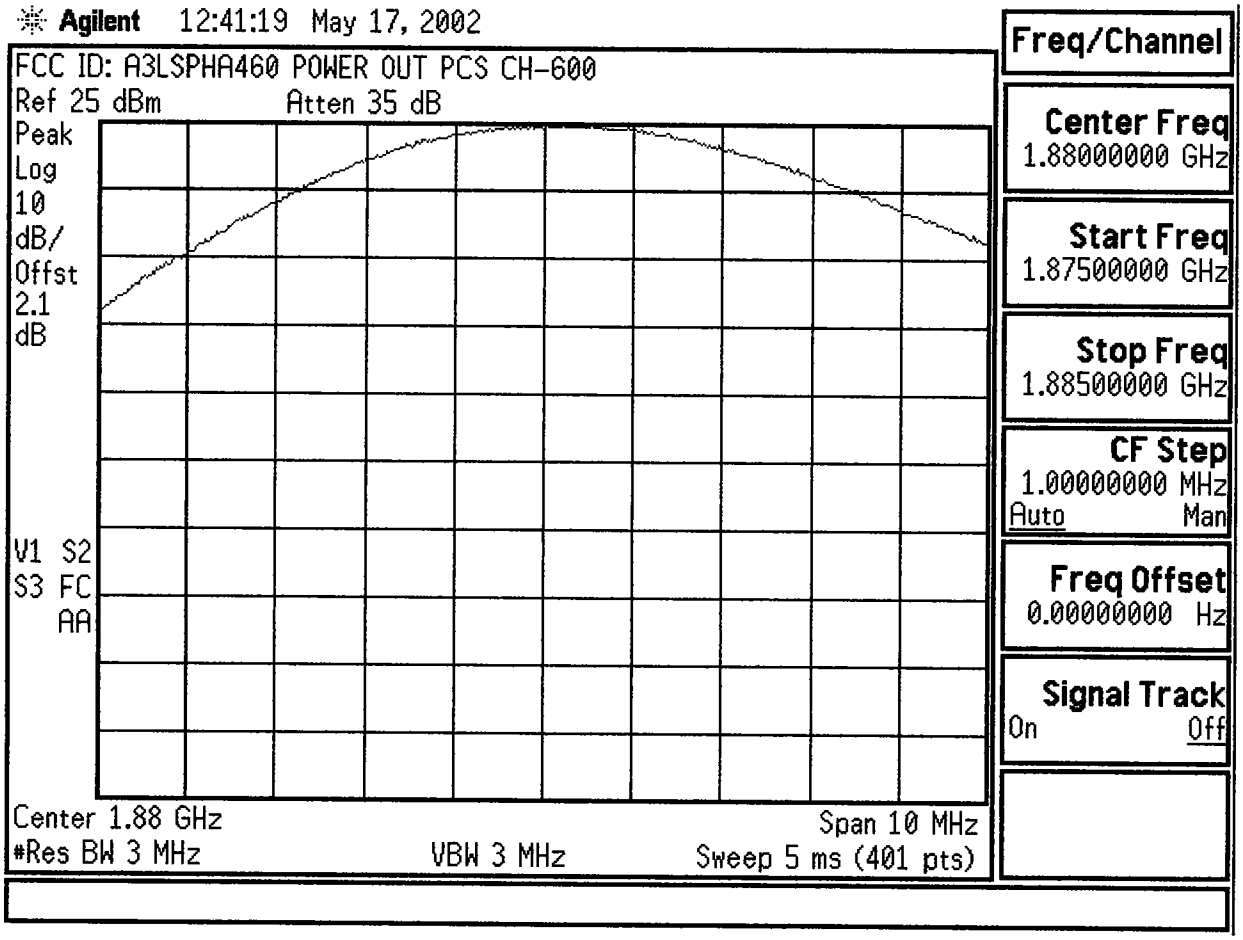
Agilent 12:41:19 May 17, 2002
FCC ID: A3LSPHA460 POWER OUT PCS CH-600
Ref 25 dBm
Atten 35 dB
Peak
Log
10
dB/
Offst
2.1
dB
V1 S2
S3 FC
AA
Center 1.88 GHz
Span 10 MHz
#Res BW 3 MHz
VBW 3 MHz
Sweep 5 ms (401 pts)
Freq/Channel
Center Freq
1.88000000 GHz
Start Freq
1.87500000 GHz
Stop Freq
1.88500000 GHz
CF Step
1.00000000 MHz
Auto
Man
Freq Offset
0.00000000 Hz
Signal Track
On
Off

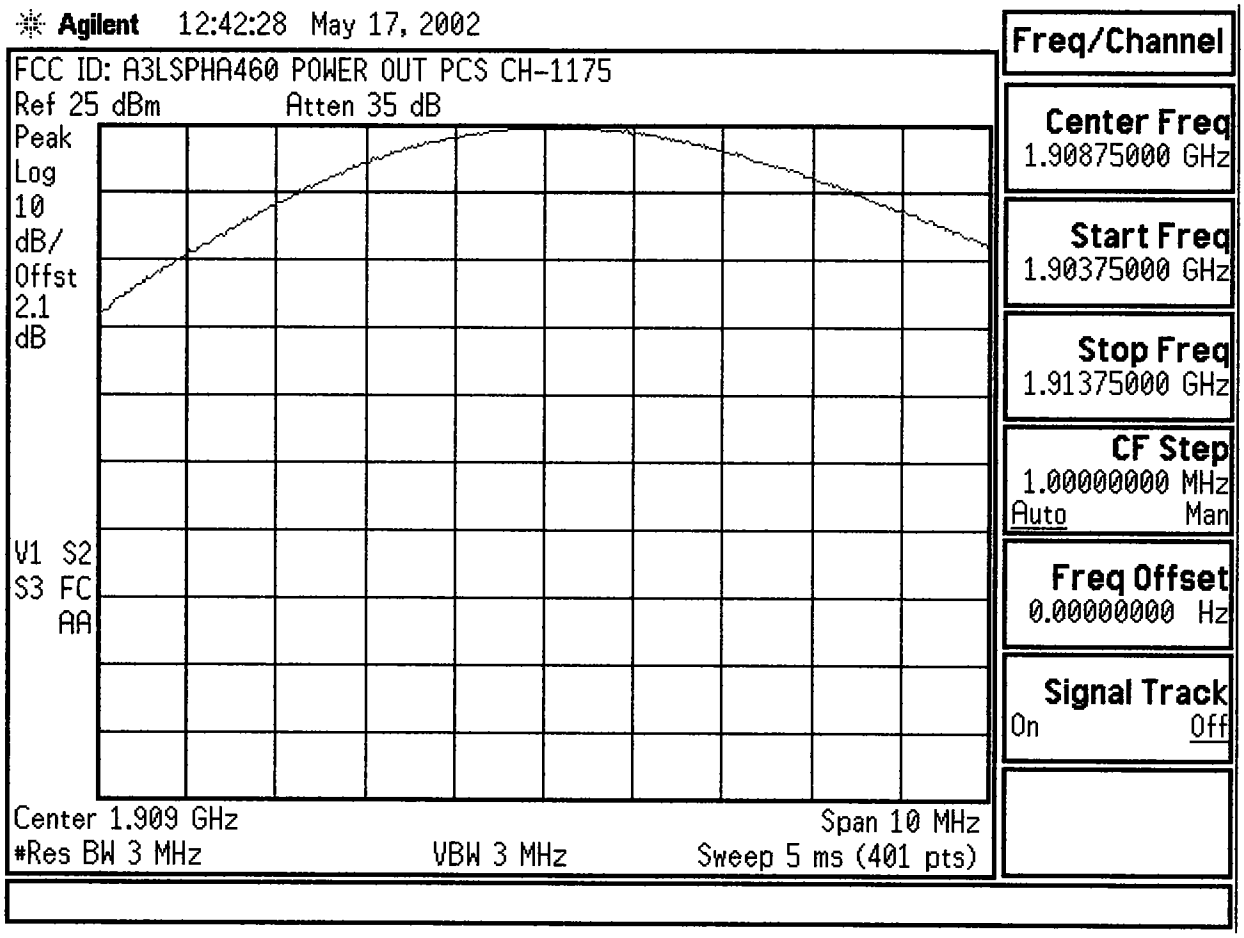
Agilent 12:42:28 May 17, 2002
FCC ID: A3LSPHA460 POWER OUT PCS CH-1175
Ref 25 dBm
Atten 35 dB
Peak
Log
10
dB/
Offst
2.1
dB
V1 S2
S3 FC
AA
Center 1.909 GHz
Span 10 MHz
#Res BW 3 MHz
VBW 3 MHz
Sweep 5 ms (401 pts)
Freq/Channel
Center Freq
1.90875000 GHz
Start Freq
1.90375000 GHz
Stop Freq
1.91375000 GHz
CF Step
1.00000000 MHz
Auto
Man
Freq Offset
0.00000000 Hz
Signal Track
On
Off

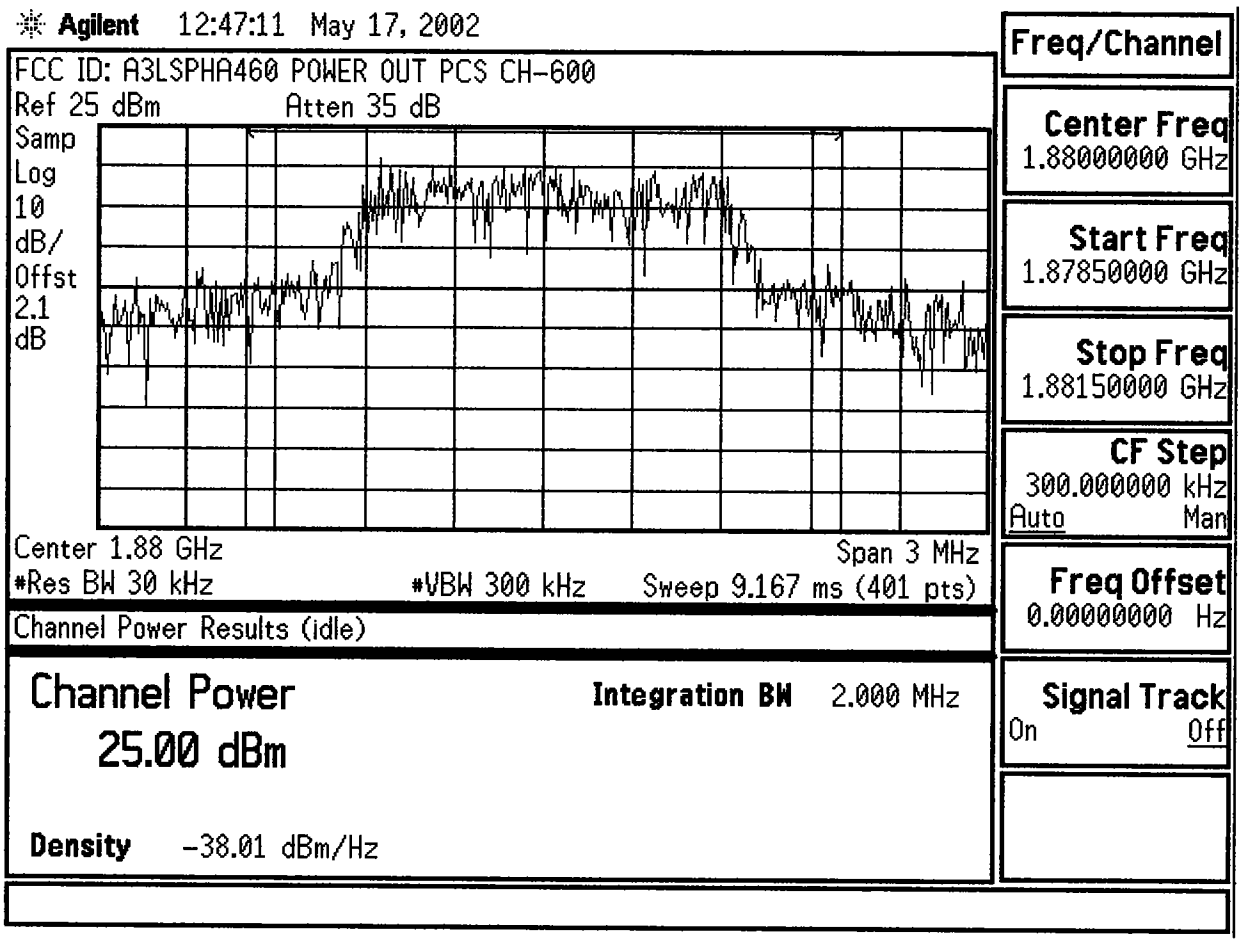
Agilent 12:47:11 May 17, 2002
FCC ID: A3LSPHA460 POWER OUT PCS CH-600
Ref 25 dBm
Atten 35 dB
Samp
Log
10
dB/
Offst
2.1
dB
Center 1.88 GHz
Span 3 MHz
#Res BW 30 kHz
#VBW 300 kHz
Sweep 9.167 ms (401 pts)
Channel Power Results (idle)
Channel Power
25.00 dBm
Integration BW 2.000 MHz
Density -38.01 dBm/Hz
Freq/Channel
Center Freq
1.88000000 GHz
Start Freq
1.87850000 GHz
Stop Freq
1.88150000 GHz
CF Step
300.000000 kHz
Auto
Man
Freq Offset
0.00000000 Hz
Signal Track
On
Off

SAMSUNG ELECTRONICS

February 4, 2002

Federal Communications Commission
Equipment Approval Services
7435 Oakland Mills Road
Columbia, MD 21046

SUBJECT: FCC E911 REQUIREMENTS PER §22.921

Gentlemen:

Samsung Electronics Co., Ltd. hereby certifies that the analog cellular telephone (FCC ID: A3LSPHA460), using the Automatic A/B Roaming – Intelligent Retry method, meets the E911 requirements specified in Section 22.921 of the FCC Rules. This procedure recognizes when a "9-1-1" call is made and, at such time, will override any programming in the mobile unit that determines the handling of a non-911 call and permit the call to be handled by other analog carriers.

Should you have any questions or comments concerning the above, please contact the undersigned.

Sincerely,

Wonseok Oh

Wallace Oh
Engineering Manager
Samsung Electronics America

SAMSUNG ELECTRONICS

AFFIDAVIT FOR ESN PROTECTION

OF CELLULAR MOBILE TELEPHONES

We hereby certify that the Portable Cellular Telephone (FCC ID: A3LSPHA460) is so designed that it complies with all the requirements for ESN protection specified in Sec.22.919 of the FCC Rules.

a) The transmitter in service has a unique ESN.

b) The ESN host component is permanently attached to a main circuit board of the mobile transmitter and the integrity of the unit operating software cannot be altered. The ESN is plated from fraudulent contact and tampering. The ESN is encoded using multiplication by a polynomial and the ESN data programmed in the memory with other information.

c) The ESN is factory set and cannot be altered, transferred, removed or otherwise able to be manipulated. Cellular mobile equipment is specifically designed such that any attempt to remove, tamper with, or change the ESN chip, its logic system, or firmware originally programmed by the manufacturer will render the mobile transmitter inoperative.

Sincerely,

Wonseok Oh

Wallace Oh
Engineering Manager
Samsung Electronics America

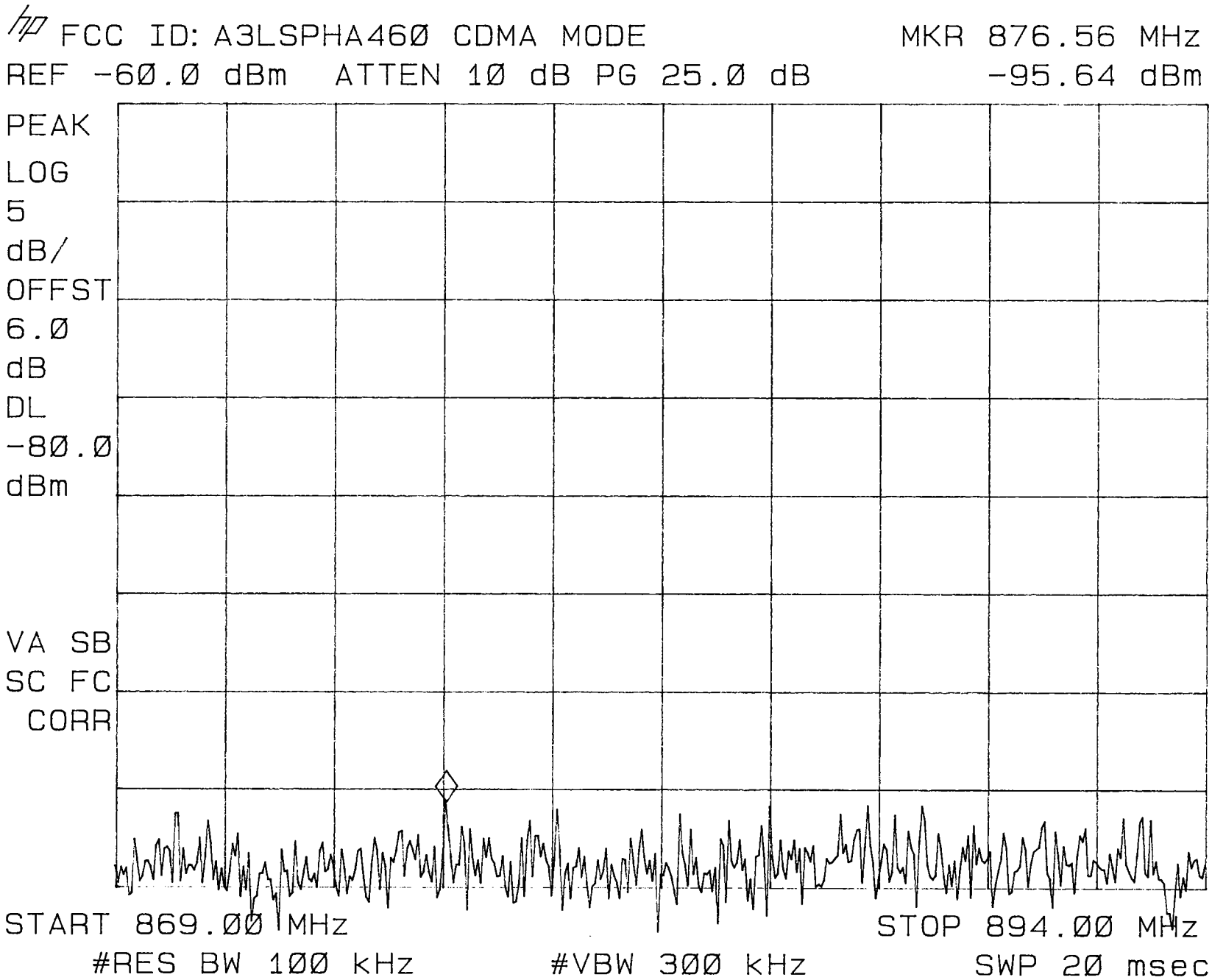
FCC ID: A3LSPHA460 CDMA MODE
MKR 876.56 MHz
REF -60.0 dBm ATTEN 10 dB PG 25.0 dB
-95.64 dBm
PEAK
LOG
5
dB/
OFFST
6.0
dB
DL
-80.0
dBm
VA SB
SC FC
CORR
START 869.00 MHz
STOP 894.00 MHz
#RES BW 100 kHz
#VBW 300 kHz
SWP 20 msec

SAR DATA SUMMARY (Continued)

Mixture Type: 835MHz Muscle

Dielectric Constant: 55.54

Conductivity: 0.99

14.13 MEASUREMENT RESULTS (CELLULAR CDMA Body SAR w/o Holster)

FREQUENCY		Modulation	Begin / End POWER‡			Separation Distance (cm) ‡‡	Antenna Position	SAR (W/kg)
MHz	Ch.		(dBm)		Battery			
848.31	0777	CDMA	25.5	25.5	Standard	1.5 [w/o Holster]	In	**0.38**
848.31	0777	CDMA	25.5	25.5	Standard	1.5 [w/o Holster]	Out	**0.21**
ANSI / IEEE C95.1 1992 - SAFETY LIMIT Spatial Peak Uncontrolled Exposure/General Population						**Muscle 1.6 W/kg (mW/g)** averaged over 1 gram		

ENVIRONMENTAL AND TISSUE CONDITIONS			
Mixture Type	835MHz Muscle	Ambient TEMPERATURE (°C)	23.0
Conductivity	0.99	Relative HUMIDITY (%)	60.8
Permittivity	55.54	Atmospheric PRESSURE (kPa)	99.9
Measured Depth of Simulating Tissue	15.0 cm	Measured Tissue TEMPERATURE (°C)	22.7

NOTES:

1. The test data reported are the worst-case SAR value with the antenna-head position set in atypical configuration. Test procedures used are according to FCC/OET Bulletin 65, Supp.C [July 2001].
2. All modes of operation were investigated, and worst-case results are reported.
3. Battery is fully charged for all readings. *Standard Battery is the Only Battery option.*

‡Power Measured	☒ Conducted	☐ ERP	☐ EIRP	
4. SAR Measurement System	☐ DASY3	☒ IDX	☐	
Phantom Configuration	☐ Left Head	☒ Flat Phantom	☐ Right Head	
5. SAR Configuration	☐ Head	☒ Body	☐ Hand	
6. Test Signal Call Mode	☒ Manu. Test Codes	☐ Base Station Simulator		
7. ‡‡Test Configuration	☐ With Holster	☒ Without Holster		

8. Both sides of the phone were tested and the worst-case side is reported.

Randy Ortanez
President

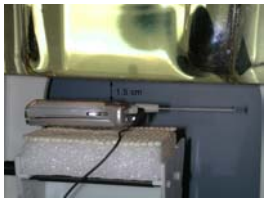

Figure 14.13 Body SAR Test Setup
-- w/o Holster --

© 2002 PCTEST Engineering Laboratory, Inc.

3

Getting to know your Sprint PCS Phone ™

In this Section

_**Your Phone ’s highlights and features**

_**Viewing the display screen**

_**Turning your Phone ON and OFF**

_**Using the standard and extended batteries**

Your Sprint PCS Phone is packed with features that can simplify your life and expand your ability to stay connected to the people and information that are important to you. We know that you’re anxious to start using your phone, so this section gives you a quick introduction to highlights and features. Easy-to-follow instructions will guide you through the basics of the most common features of your phone and you’ll be on your way to using it in no time.

Don’t forget the other chapters in this guide. They’re filled with information about the capabilities and benefits of your new Sprint PCS Phone. They include detailed step-by-step instructions to familiarize you with all the features, and how to customize your phone to meet your specific needs.

Front view of Phone

Menu

Clear

End

Pound /Space

Microphone

OK /Mail

Volume

Headset Jack

Talk

Asterisk

Next Word

Antenna.

Highlights

Congratulations on the purchase of your Sprint PCS Phone ™ - the NEX by Samsung (model SPH-A460). This phone is lightweight, easy-to-use, reliable and offers many significant features.

Here is a list of the SPH-A460’s features.

_Dual-band capability provides access to other PCS CDMA and analog cellular networks where

GPS Receiver

The SPH-A460 contains a Global Positioning System (GPS) receiver to assist the network in determing the position of the handset. GPS is a system of satellites obiting the earth that provide positioning and timing information. Te handset GPS receiver collects ranging information from these satellite signals and transmits this information to the network.

Enhanced 911 (E911) Wireless Services

Under the rules of the Federal Communications Commision, wireless companies are required to provide Automatic Location Identification (ALI) information that enables 911 callers to be located within 50 meters for 67% of the calls and 150 meters for 95% of the calls. The SPH-A460 is an ALI-capable phone designed to support 911 emergency services.

SAR DATA SUMMARY

MEASUREMENT RESULTS (CDMA Right Head SAR - Touch)								
FREQUENCY		Modulation	Begin / End POWER‡			Device Test Position	Antenna Position	SAR (W/kg)
MHz	Ch.		(dBm)		Battery			
824.70	1013	CDMA	25.5	25.5	STANDARD	Cheek / Touch	In	**0.70**
824.70	1013	CDMA	25.5	25.5	STANDARD	Cheek / Touch	Out	**0.40**
835.89	363	CDMA	25.5	25.5	STANDARD	Cheek / Touch	In	**0.87**
835.89	363	CDMA	25.5	25.5	STANDARD	Cheek / Touch	Out	**0.55**
848.31	777	CDMA	25.5	25.5	STANDARD	Cheek / Touch	In	**1.11**
848.31	777	CDMA	25.5	25.5	STANDARD	Cheek / Touch	Out	**0.68**
ANSI / IEEE C95.1 1992 - SAFETY LIMIT Spatial Peak Uncontrolled Exposure/General Population						**Brain 1.6 W/kg (mW/g)** averaged over 1 gram		

NOTES:

1. The test data reported are the worst-case SAR value with the antenna-head position set in a typical configuration. Test procedures used are according to FCC/OET Bulletin 65, Supp.C [July 2001].
2. All modes of operation were investigated, and worst-case results are reported.
3. Battery is fully charged for all readings. *Standard & Extended Batteries are options.*

	‡Power Measured	☒	Conducted	☐	ERP	☐	EIRP
4.	SAR Measurement System	☐	DASY3	☒	IDX	☐	
	Phantom Configuration	☒	Right Head	☐	Flat Phantom	☐	Left Head
5.	SAR Configuration	☒	Head	☐	Body	☐	Hand
6.	Test Signal Call Mode	☒	Manu. Test Codes	☐	Base Station Simulator		

SAR Data Report 02050312

```
  Start        :  3-May-02 02:37:41 pm
  End          :  3-May-02 02:44:10 pm
  Code Version : 4.08
  Robot Version: 4.08

Product Data:
  Type             : SAMSUNG
  Model Number     : SPH-A460
  Serial Number    : 3
  Frequency        : 824.70 MHz
  Transmit Pwr     : 0.355 W
  Antenna Type     : Helical
  Antenna Posn.    : In

Measurement Data:
  Phantom Name        : SAM-R
  Phantom Type        : Right Ear
  Tissue Type         : Brain
  Tissue Dielectric   : 43.440
  Tissue Conductivity : 0.870
  Tissue Density      : 1.000
  Robot Name          : CRS

Probe Data:
  Probe Name              : PCT002
  Probe Type              : E Fld Triangle
  Frequency               : 835 MHz
  Tissue Type             : Brain
  Calibrated Dielectric   : 40.700
  Calibrated Conductivity :  0.890
  Calibrated Density      :  1.000
  Probe Offset            :  2.400 mm
  Conversion Factor       :  5.800
  Probe Sensitivity :  3.597   3.474   3.049   mV/(mW/cm^2)
  Amplifier Gains   :  20.00   20.00   20.00

Sample:
  Rate:         6000 Samples/Sec
  Count:        100 Samples
  NIDAQ Gain:   5

Comments:
  CDMA MODE CH-1013
  CHEEK
  CF=1; Amb. Temp= 21.3 'C; Liq. Temp=21.0 'C



Area Scan - Max Peak SAR Value at x=72.0 y=14.0 = 0.69 W/kg

Zoom Scan - Max Peak SAR Value at x=78.0 y=12.0 z=0.0 = 0.95 W/kg

Max 1g SAR at x=73.0 y=14.0 z=0.0 = 0.70 W/kg

Max 10g SAR at x=74.0 y=13.0 z=0.0 = 0.47 W/kg
```

SAR Data Report 02050313

```
  Start        :  3-May-02 02:45:43 pm
  End          :  3-May-02 02:52:01 pm
  Code Version : 4.08
  Robot Version: 4.08

Product Data:
  Type             : SAMSUNG
  Model Number     : SPH-A460
  Serial Number    : 3
  Frequency        : 824.70 MHz
  Transmit Pwr     : 0.355 W
  Antenna Type     : Helical
  Antenna Posn.    : Out

Measurement Data:
  Phantom Name        : SAM-R
  Phantom Type        : Right Ear
  Tissue Type         : Brain
  Tissue Dielectric   : 43.440
  Tissue Conductivity : 0.870
  Tissue Density      : 1.000
  Robot Name          : CRS

Probe Data:
  Probe Name              : PCT002
  Probe Type              : E Fld Triangle
  Frequency               : 835 MHz
  Tissue Type             : Brain
  Calibrated Dielectric   : 40.700
  Calibrated Conductivity :  0.890
  Calibrated Density      :  1.000
  Probe Offset            :  2.400 mm
  Conversion Factor       :  5.800
  Probe Sensitivity :  3.597   3.474   3.049   mV/(mW/cm^2)
  Amplifier Gains   :  20.00   20.00   20.00

Sample:
  Rate:         6000 Samples/Sec
  Count:        100 Samples
  NIDAQ Gain:   5

Comments:
  CDMA MODE CH-1013
  CHEEK
  CF=1; Amb. Temp= 21.3 'C; Liq. Temp=21.0 'C



Area Scan - Max Peak SAR Value at x=71.0 y=15.0 = 0.40 W/kg

Zoom Scan - Max Peak SAR Value at x=72.0 y=19.0 z=0.0 = 0.53 W/kg

Max 1g SAR at x=73.0 y=15.0 z=0.0 = 0.40 W/kg

Max 10g SAR at x=74.0 y=14.0 z=0.0 = 0.27 W/kg
```

SAR Data Report 02050314

```
  Start        :  3-May-02 02:58:51 pm
  End          :  3-May-02 03:05:04 pm
  Code Version : 4.08
  Robot Version: 4.08

Product Data:
  Type             : SAMSUNG
  Model Number     : SPH-A460
  Serial Number    : 3
  Frequency        : 835.89 MHz
  Transmit Pwr     : 0.355 W
  Antenna Type     : Helical
  Antenna Posn.    : In

Measurement Data:
  Phantom Name        : SAM-R
  Phantom Type        : Right Ear
  Tissue Type         : Brain
  Tissue Dielectric   : 43.440
  Tissue Conductivity : 0.870
  Tissue Density      : 1.000
  Robot Name          : CRS

Probe Data:
  Probe Name              : PCT002
  Probe Type              : E Fld Triangle
  Frequency               : 835 MHz
  Tissue Type             : Brain
  Calibrated Dielectric   : 40.700
  Calibrated Conductivity :  0.890
  Calibrated Density      :  1.000
  Probe Offset            :  2.400 mm
  Conversion Factor       :  5.800
  Probe Sensitivity :  3.597   3.474   3.049   mV/(mW/cm^2)
  Amplifier Gains   :  20.00   20.00   20.00

Sample:
  Rate:         6000 Samples/Sec
  Count:        100 Samples
  NIDAQ Gain:   5

Comments:
  CDMA MODE CH-363
  CHEEK
  CF=1; Amb. Temp= 21.3 'C; Liq. Temp=21.0 'C



Area Scan - Max Peak SAR Value at x=72.0 y=12.0 = 0.91 W/kg

Zoom Scan - Max Peak SAR Value at x=71.0 y=13.0 z=0.0 = 1.58 W/kg

Max 1g SAR at x=73.0 y=13.0 z=0.0 = 0.87 W/kg

Max 10g SAR at x=74.0 y=12.0 z=0.0 = 0.55 W/kg
```

SAR Data Report 02050315

```
  Start        :  3-May-02 03:06:21 pm
  End          :  3-May-02 03:12:39 pm
  Code Version : 4.08
  Robot Version: 4.08

Product Data:
  Type             : SAMSUNG
  Model Number     : SPH-A460
  Serial Number    : 3
  Frequency        : 835.89 MHz
  Transmit Pwr     : 0.355 W
  Antenna Type     : Helical
  Antenna Posn.    : Out

Measurement Data:
  Phantom Name        : SAM-R
  Phantom Type        : Right Ear
  Tissue Type         : Brain
  Tissue Dielectric   : 43.440
  Tissue Conductivity : 0.870
  Tissue Density      : 1.000
  Robot Name          : CRS

Probe Data:
  Probe Name              : PCT002
  Probe Type              : E Fld Triangle
  Frequency               : 835 MHz
  Tissue Type             : Brain
  Calibrated Dielectric   : 40.700
  Calibrated Conductivity :  0.890
  Calibrated Density      :  1.000
  Probe Offset            :  2.400 mm
  Conversion Factor       :  5.800
  Probe Sensitivity :  3.597   3.474   3.049   mV/(mW/cm^2)
  Amplifier Gains   :  20.00   20.00   20.00

Sample:
  Rate:         6000 Samples/Sec
  Count:        100 Samples
  NIDAQ Gain:   5

Comments:
  CDMA MODE CH-363
  CHEEK
  CF=1; Amb. Temp= 21.3 'C; Liq. Temp=21.0 'C



Area Scan - Max Peak SAR Value at x=71.0 y=13.0 = 0.51 W/kg

Zoom Scan - Max Peak SAR Value at x=72.0 y=14.0 z=0.0 = 0.87 W/kg

Max 1g SAR at x=73.0 y=14.0 z=0.0 = 0.55 W/kg

Max 10g SAR at x=73.0 y=13.0 z=0.0 = 0.35 W/kg
```

SAR DATA SUMMARY

MEASUREMENT RESULTS (CDMA Left Head SAR - Touch)								
FREQUENCY		Modulation	Begin / End POWER‡			Device Test Position	Antenna Position	SAR (W/kg)
MHz	Ch.		(dBm)		Battery			
824.70	1013	CDMA	25.5	25.5	STANDARD	Cheek / Touch	In	**0.93**
824.70	1013	CDMA	25.5	25.5	STANDARD	Cheek / Touch	Out	**0.40**
835.89	363	CDMA	25.5	25.5	STANDARD	Cheek / Touch	In	**1.07**
835.89	363	CDMA	25.5	25.5	STANDARD	Cheek / Touch	Out	**0.52**
848.31	777	CDMA	25.5	25.5	STANDARD	Cheek / Touch	In	**1.21**
848.31	777	CDMA	25.5	25.5	STANDARD	Cheek / Touch	Out	**0.54**
ANSI / IEEE C95.1 1992 - SAFETY LIMIT Spatial Peak Uncontrolled Exposure/General Population						**Brain 1.6 W/kg (mW/g)** averaged over 1 gram		

NOTES:

1. The test data reported are the worst-case SAR value with the antenna-head position set in a typical configuration. Test procedures used are according to FCC/OET Bulletin 65, Supp.C [July 2001].
2. All modes of operation were investigated, and worst-case results are reported.
3. Battery is fully charged for all readings. *Standard & Extended Batteries are options.*

	‡Power Measured	☒	Conducted	☐	ERP	☐	EIRP
4.	SAR Measurement System	☐	DASY3	☒	IDX	☐	
	Phantom Configuration	☐	Right Head	☐	Flat Phantom	☒	Left Head
5.	SAR Configuration	☒	Head	☐	Body	☐	Hand
6.	Test Signal Call Mode	☒	Manu. Test Codes	☐	Base Station Simulator		

SAR Data Report 02050318

```
  Start        :  3-May-02 03:39:55 pm
  End          :  3-May-02 03:49:13 pm
  Code Version : 4.08
  Robot Version: 4.08

Product Data:
  Type             : SAMSUNG
  Model Number     : SPH-A460
  Serial Number    : 3
  Frequency        : 824.70 MHz
  Transmit Pwr     : 0.355 W
  Antenna Type     : Helical
  Antenna Posn.    : In

Measurement Data:
  Phantom Name        : SAM-L
  Phantom Type        : Left Ear
  Tissue Type         : Brain
  Tissue Dielectric   : 43.440
  Tissue Conductivity : 0.870
  Tissue Density      : 1.000
  Robot Name          : CRS

Probe Data:
  Probe Name              : PCT002
  Probe Type              : E Fld Triangle
  Frequency               : 835 MHz
  Tissue Type             : Brain
  Calibrated Dielectric   : 40.700
  Calibrated Conductivity :  0.890
  Calibrated Density      :  1.000
  Probe Offset            :  2.400 mm
  Conversion Factor       :  5.800
  Probe Sensitivity :  3.597   3.474   3.049   mV/(mW/cm^2)
  Amplifier Gains   :  20.00   20.00   20.00

Sample:
  Rate:         6000 Samples/Sec
  Count:        100 Samples
  NIDAQ Gain:   5

Comments:
  CDMA MODE CH-1013
  CHEEK
  CF=1; Amb. Temp= 21.3 'C; Liq. Temp=21.0 'C



Area Scan - Max Peak SAR Value at x=72.0 y=5.0 = 0.91 W/kg

Zoom Scan - Max Peak SAR Value at x=73.0 y=5.0 z=0.0 = 1.30 W/kg

Max 1g SAR at x=74.0 y=5.0 z=0.0 = 0.93 W/kg

Max 10g SAR at x=73.0 y=5.0 z=0.0 = 0.62 W/kg
```

SAR Data Report 02050319

```
  Start        :  3-May-02 03:50:13 pm
  End          :  3-May-02 03:57:44 pm
  Code Version : 4.08
  Robot Version: 4.08

Product Data:
  Type             : SAMSUNG
  Model Number     : SPH-A460
  Serial Number    : 3
  Frequency        : 824.70 MHz
  Transmit Pwr     : 0.355 W
  Antenna Type     : Helical
  Antenna Posn.    : Out

Measurement Data:
  Phantom Name        : SAM-L
  Phantom Type        : Left Ear
  Tissue Type         : Brain
  Tissue Dielectric   : 43.440
  Tissue Conductivity : 0.870
  Tissue Density      : 1.000
  Robot Name          : CRS

Probe Data:
  Probe Name              : PCT002
  Probe Type              : E Fld Triangle
  Frequency               : 835 MHz
  Tissue Type             : Brain
  Calibrated Dielectric   : 40.700
  Calibrated Conductivity :  0.890
  Calibrated Density      :  1.000
  Probe Offset            :  2.400 mm
  Conversion Factor       :  5.800
  Probe Sensitivity :  3.597   3.474   3.049   mV/(mW/cm^2)
  Amplifier Gains   :  20.00   20.00   20.00

Sample:
  Rate:         6000 Samples/Sec
  Count:        100 Samples
  NIDAQ Gain:   5

Comments:
  CDMA MODE CH-1013
  CHEEK
  CF=1; Amb. Temp= 21.3 'C; Liq. Temp=21.0 'C



Area Scan - Max Peak SAR Value at x=71.0 y=6.0 = 0.38 W/kg

Zoom Scan - Max Peak SAR Value at x=71.0 y=6.0 z=0.0 = 0.57 W/kg

Max 1g SAR at x=73.0 y=6.0 z=0.0 = 0.40 W/kg

Max 10g SAR at x=73.0 y=6.0 z=0.0 = 0.27 W/kg
```

SAR Data Report 02050316

```
  Start        :  3-May-02 03:14:38 pm
  End          :  3-May-02 03:24:07 pm
  Code Version : 4.08
  Robot Version: 4.08

Product Data:
  Type             : SAMSUNG
  Model Number     : SPH-A460
  Serial Number    : 3
  Frequency        : 835.89 MHz
  Transmit Pwr     : 0.355 W
  Antenna Type     : Helical
  Antenna Posn.    : In

Measurement Data:
  Phantom Name        : SAM-L
  Phantom Type        : Left Ear
  Tissue Type         : Brain
  Tissue Dielectric   : 43.440
  Tissue Conductivity : 0.870
  Tissue Density      : 1.000
  Robot Name          : CRS

Probe Data:
  Probe Name              : PCT002
  Probe Type              : E Fld Triangle
  Frequency               : 835 MHz
  Tissue Type             : Brain
  Calibrated Dielectric   : 40.700
  Calibrated Conductivity :  0.890
  Calibrated Density      :  1.000
  Probe Offset            :  2.400 mm
  Conversion Factor       :  5.800
  Probe Sensitivity :  3.597   3.474   3.049   mV/(mW/cm^2)
  Amplifier Gains   :  20.00   20.00   20.00

Sample:
  Rate:         6000 Samples/Sec
  Count:        100 Samples
  NIDAQ Gain:   5

Comments:
  CDMA MODE CH-363
  CHEEK
  CF=1; Amb. Temp= 21.3 'C; Liq. Temp=21.0 'C



Area Scan - Max Peak SAR Value at x=73.0 y=6.0 = 1.00 W/kg

Zoom Scan - Max Peak SAR Value at x=75.0 y=6.0 z=0.0 = 1.66 W/kg

Max 1g SAR at x=76.0 y=6.0 z=0.0 = 1.07 W/kg

Max 10g SAR at x=75.0 y=5.0 z=0.0 = 0.69 W/kg
```

SAR Data Report 02050317

```
  Start        :  3-May-02 03:29:20 pm
  End          :  3-May-02 03:38:41 pm
  Code Version : 4.08
  Robot Version: 4.08

Product Data:
  Type             : SAMSUNG
  Model Number     : SPH-A460
  Serial Number    : 3
  Frequency        : 835.89 MHz
  Transmit Pwr     : 0.355 W
  Antenna Type     : Helical
  Antenna Posn.    : Out

Measurement Data:
  Phantom Name        : SAM-L
  Phantom Type        : Left Ear
  Tissue Type         : Brain
  Tissue Dielectric   : 43.440
  Tissue Conductivity : 0.870
  Tissue Density      : 1.000
  Robot Name          : CRS

Probe Data:
  Probe Name              : PCT002
  Probe Type              : E Fld Triangle
  Frequency               : 835 MHz
  Tissue Type             : Brain
  Calibrated Dielectric   : 40.700
  Calibrated Conductivity :  0.890
  Calibrated Density      :  1.000
  Probe Offset            :  2.400 mm
  Conversion Factor       :  5.800
  Probe Sensitivity :  3.597   3.474   3.049   mV/(mW/cm^2)
  Amplifier Gains   :  20.00   20.00   20.00

Sample:
  Rate:         6000 Samples/Sec
  Count:        100 Samples
  NIDAQ Gain:   5

Comments:
  CDMA MODE CH-363
  CHEEK
  CF=1; Amb. Temp= 21.3 'C; Liq. Temp=21.0 'C



Area Scan - Max Peak SAR Value at x=72.0 y=6.0 = 0.51 W/kg

Zoom Scan - Max Peak SAR Value at x=71.0 y=7.0 z=0.0 = 0.71 W/kg

Max 1g SAR at x=74.0 y=6.0 z=0.0 = 0.52 W/kg

Max 10g SAR at x=73.0 y=5.0 z=0.0 = 0.35 W/kg
```

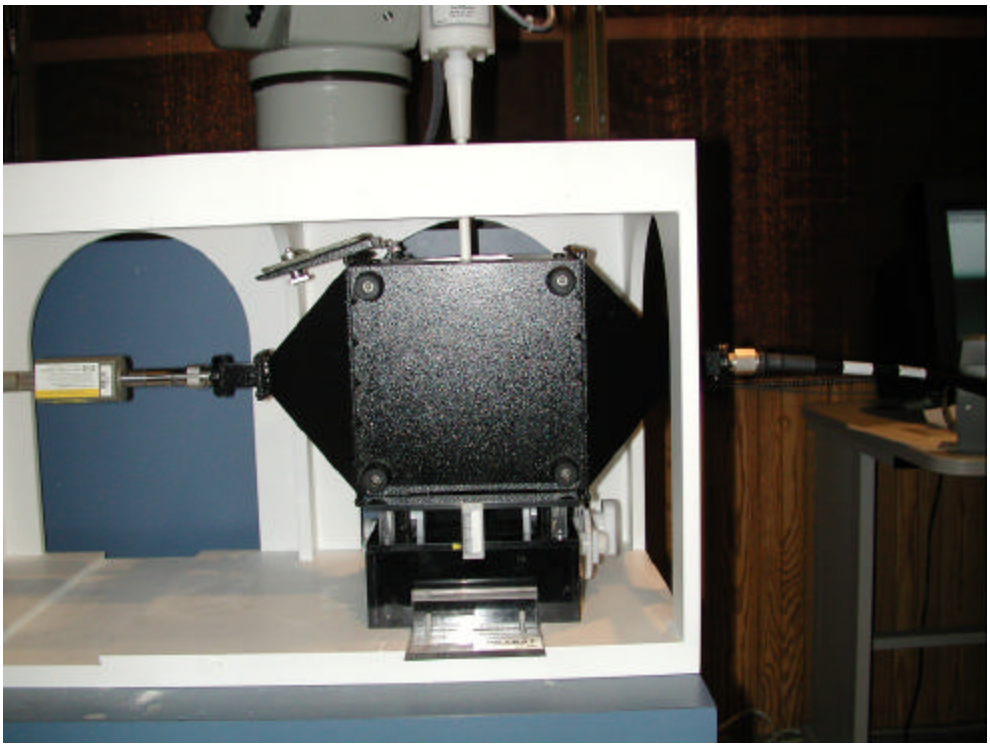

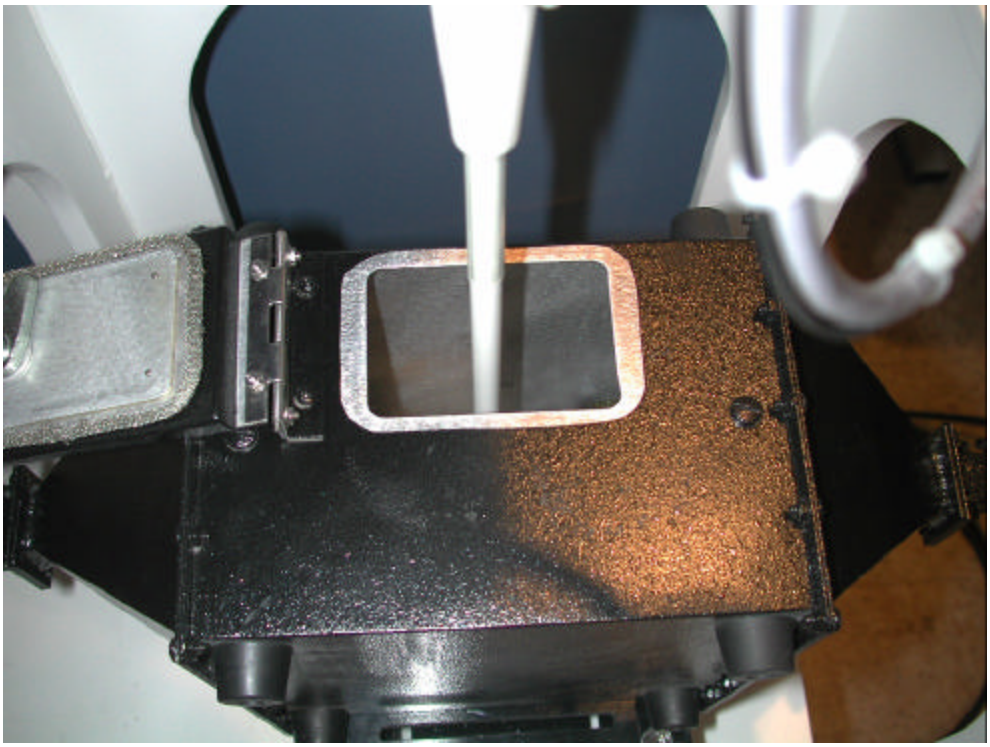

1900 MHz
E-409 PROBE
CALIBRATION

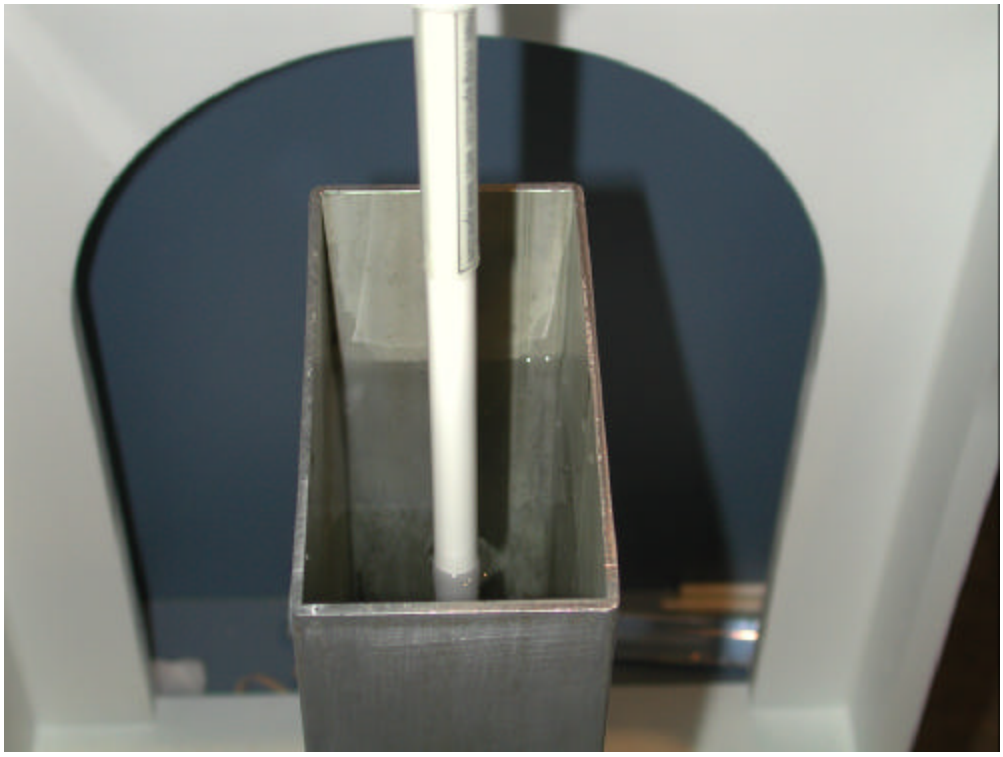

835 MHz
E-000 PROBE
CALIBRATION

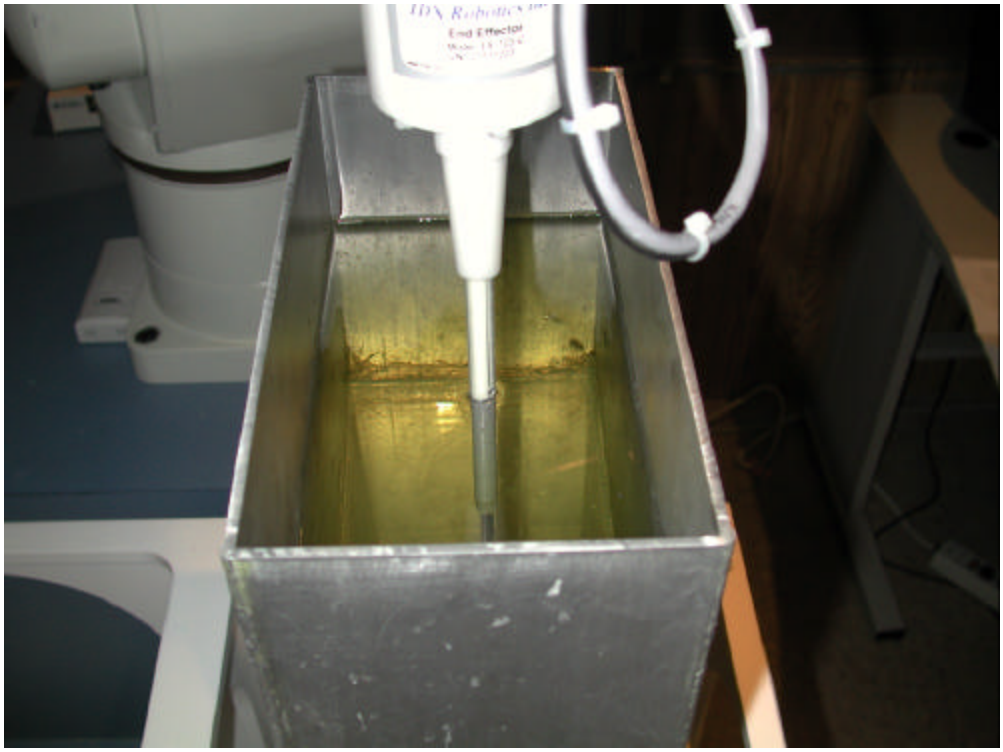
End Effector

Probe E-010

SN: PCT002

Manufactured: October 19, 2001
Calibrated: February 4, 2002

Calibrated for the IDX System

PCTEST Calibration Laboratory

Approved By:

Alfred Cirwithian
Vice President Engineering

File:	02-04-2002.cal
Date:	04-Feb-02 01:20:16 pm
Probe Name:	PCT002
Frequency:	835 MHz
Comment:	PCTEST TEM CAL
Amp 1 Setting:	20.000
Amp 2 Setting:	20.000
Amp 3 Setting:	20.000

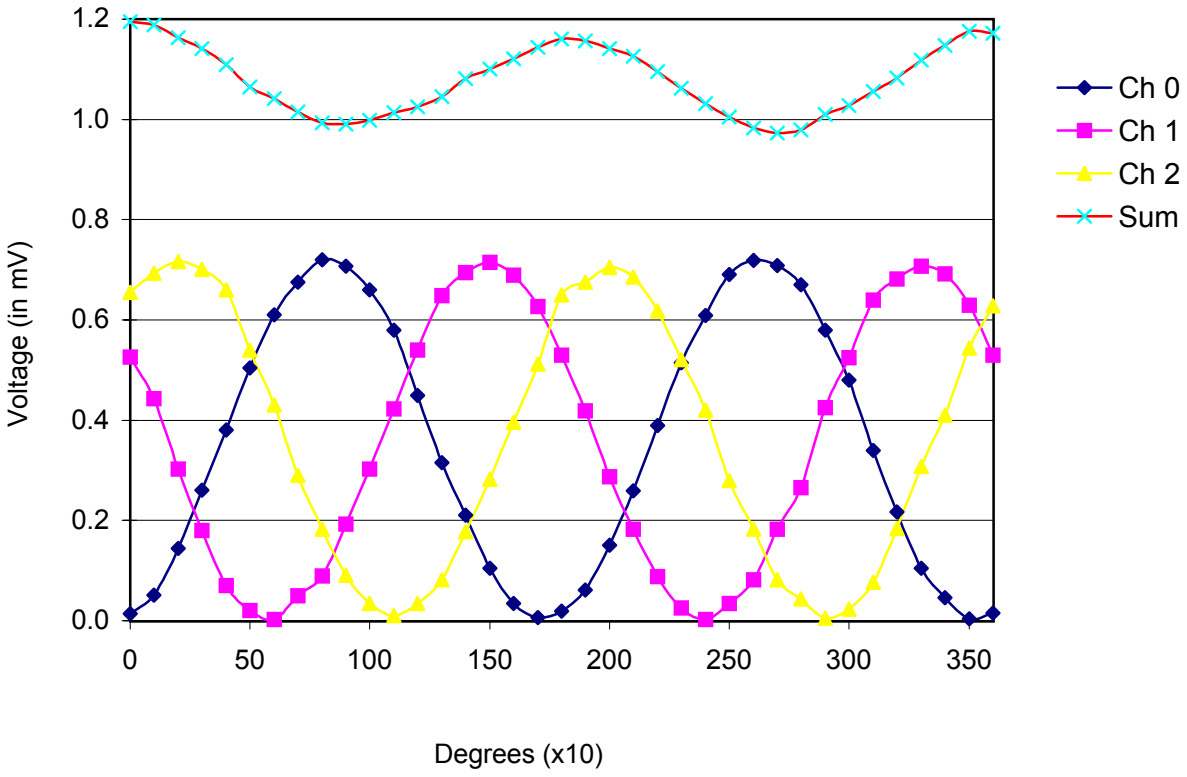

File:	02-04-2002.cal2
Date:	04-Feb-02 03:18:09 pm
Probe Name:	PCT002
Frequency:	1900 MHz
Comment:	PCTEST TEM CAL
Amp 1 Setting:	20.000
Amp 2 Setting:	20.000
Amp 3 Setting:	20.000

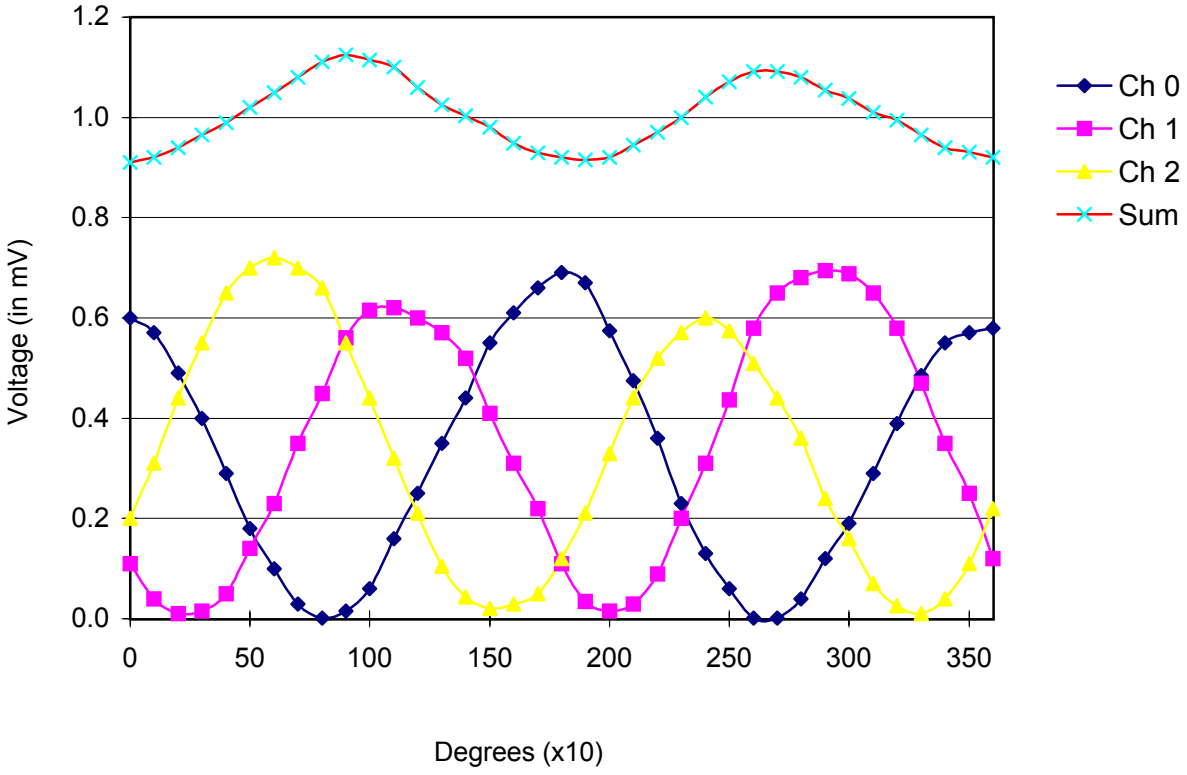

Calibration Data

Probe: PCT002

OFFSET (cm)	ANGLE (deg)
0.24	54.73

Tissue Type	Freq. (MHz)	Dielectric Constant	Conductivity (S/m)	Conversion Factor
Brain	835	40.7	0.89	5.8
Brain	1900	40.2	1.41	4.7
Muscle	835	55.7	0.99	4.9
Muscle	1900	53.9	1.48	4.5

Frequency	Isotropicity	
	%	dB
835	4.06	0.173
1900	5.05	0.148

Calibrated by: SL Date: 02/04/2002

© 2002 *PCTEST*

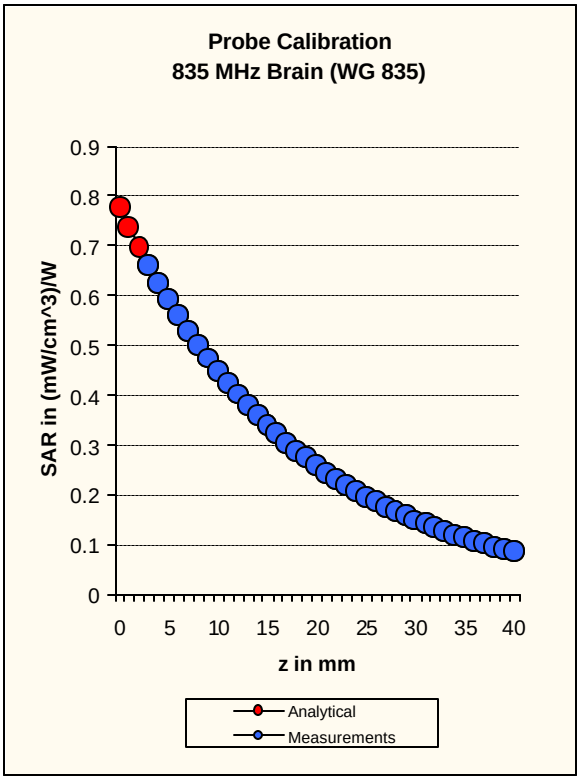

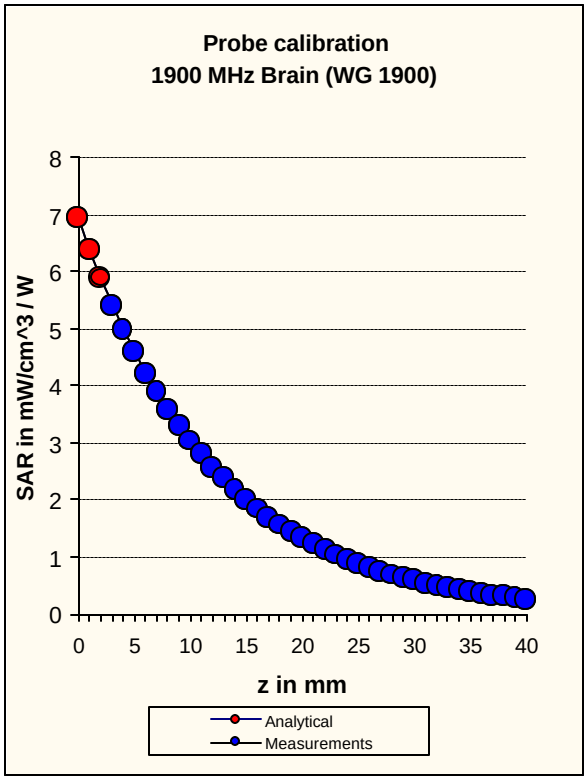

Conversion Factor Assessment for *IDX* SAR Measurement System

S/N: PCT002

835 MHz Brain

$\varepsilon_r = 40.7 \pm 5\%$ $\sigma = 0.89 \pm 5\%$ mho/m

Conversion Factor = **5.8** ± 7% (k=2)

1900 MHz Brain

$\varepsilon_r = 40.2 \pm 5\%$ $\sigma = 1.41 \pm 5\%$ mho/m

Conversion Factor = **4.7** ± 7% (k=2)

Thermal Scan

This is done in a flat phantom with a dipole antenna.
The hotspot is found during an Area Scan using an E-Field probe.
A thermister is attached to the E-Field probe with a 10mm offset.
The thermister is aligned with hot spot of the dipole.
The signal generator is cycled through different output powers.
The thermister is used to sample ΔTemperature over 30 sec.
The ΔTemperature Slope is calculated.

The E-Field probe is aligned with the hot spot.
The signal generator is cycled through different output powers.
The E-Field probe output is sampled.
The E-Field Slope is calculated, using the linear portion of the samples.

$$CF = (3770 * \sigma * HeatTime * ESlope) / (\rho * HeatCap * TSlope)$$

HeatTime	= Sample time for the TSlope (30 sec)
σ	= Conductivity
ρ	= Density of the tissue (Typically around 1.3)
HeatCap	= Heat Capacity of the tissue
TSlope	= Slope of the ΔTemperatures
ESlope	= Slope of the E-Field Readings

General Algorithm for the ALIDX500 Ver 4.08

The typical scan consists of an Area Scan and a Zoom Scan.

Area Scan - Is a single layer scan done with the probe tip at z=2.5mm. The grid data is typically run in 10x10mm increments and cover the whole DUT. A splined is run on the data at 1mm increments. This used to determine the local hot spot. The Zoom scan is centered on this hot spot.

Zoom Scan - This is a cube scan of size 5x5x7 points at spacing of 8x8x5mm for a cube size of 32X32x30mm. (175 points)

The points are extrapolated to the surface using a 4th order Lagrange polynomial.

A 3d spline is run over all the sampled and extrapolated points to get points spaced 1 mm apart in all directions. (Typically 33759 points)

For the 1Gram average the software then calculates all the 10x10x10mm averages. It then finds the greatest value and reports it.

For the 10Gram average the software calculates all 22x22x22mm averages. It then finds the greatest value and reports it.

SAR Calculation:

Each SAR point was found using:

Sum = ((Ch1Ave * Gain)/Sense1 + (Ch2Ave * Gain)/Sense2 + (Ch3Ave * Gain)/Sense)

Sense1-3 = Sensitivity of probe mv/(mW/cm^2)
Ch#Ave = Average reading from the Probe Channel
Gain = DC Amplifier Gain (Around 20x)

SAR = (Sum * σ * 3770) / (ρ * CF)

Sum = Sum of 3 channels (from above) (mW/cm^2)
σ = Conductivity
ρ = Tissue Density (usually 1.0 during scan)
CF = Conversion Factor (Found during thermal scan)

Sensitivities were found in a TEM cell with a power density of 1 mW/cm^2.

Conversion Factor was found during the Thermal Calibration.