EPBD-002040
Ed. 00

Mobile WiMAX RAS SPI-2213

System Descriptionl

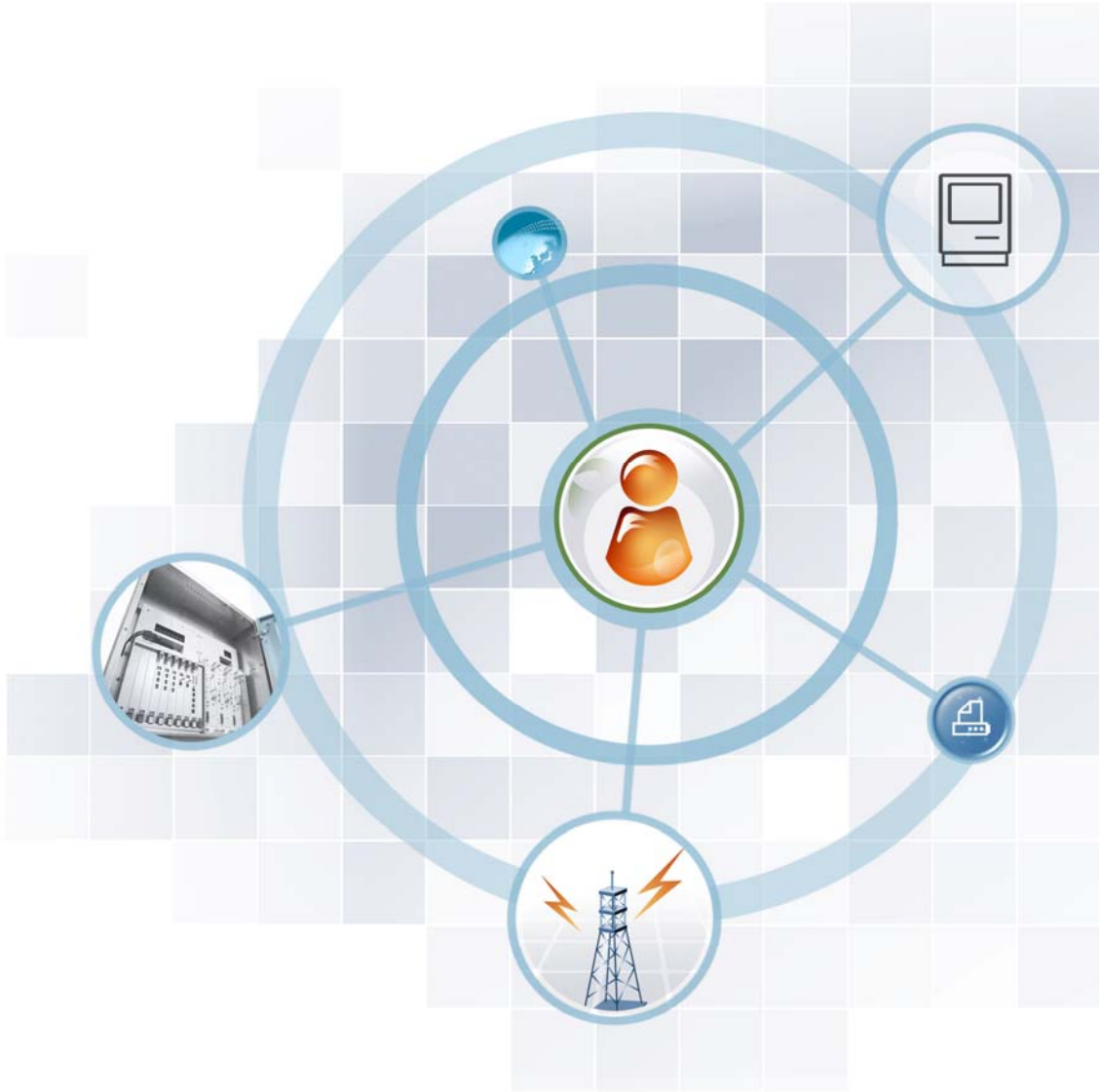

SAMSUNG ELECTRONICS

COPYRIGHT

This manual is proprietary to SAMSUNG Electronics Co., Ltd. and is protected by copyright.
No information contained herein may be copied, translated, transcribed or duplicated for any commercial purposes or disclosed to the third party in any form without the prior written consent of SAMSUNG Electronics Co., Ltd.

TRADEMARKS

Product names mentioned in this manual may be trademarks and/or registered trademarks of their respective companies.

This manual should be read and used as a guideline for properly installing and operating the product.

This manual may be changed for the system improvement, standardization and other technical reasons without prior notice.

If you need updated manuals or have any questions concerning the contents of the manuals, contact our **Document Center** at the following address or Web site:

Address: Document Center 3rd Floor Jeong-bo-tong-sin-dong. Dong-Suwon P.O. Box 105, 416, Maetan-3dong Yeongtong-gu, Suwon-si, Gyeonggi-do, Korea 442-600

Homepage: http://www.samsungdocs.com

©2009 SAMSUNG Electronics Co., Ltd. All rights reserved.

INTRODUCTION

Purpose

This description describes the characteristics, functions and structures of the SPI-2213, which is the RAS of Mobile WiMAX.

Document Content and Organization

This description is composed of five Chapters and an Abbreviation as follows:

CHAPTER 1. Overview of Mobile WiMAX System

- Mobile WiMAX System Introduction
- Characteristics of Mobile WiMAX System
- Components of Mobile WiMAX Network
- Functions of Mobile WiMAX System

CHAPTER 2. Overview of SPI-2213

- SPI-2213 Introduction
- Major functions
- Resources
- System Configuration
- Interface between the Systems

CHAPTER 3. SPI-2213 Architecture

- System Configuration
- Hardware Structure
- Software Structure
- Redundancy

© SAMSUNG Electronics Co., Ltd.

CHAPTER 4. Message Flow

- Call Processing Message Flow
- Network Synchronization Message Flow
- Alarm Message Flow
- Loading Message Flow
- Operation and Maintenance Message Flow

CHAPTER 5. Additional Functions and Tools

- RET
- Web-EMT

ABBREVIATION

Describes the acronyms used in this description.

Conventions

The following types of paragraphs contain special information that must be carefully read and thoroughly understood. Such information may or may not be enclosed in a rectangular box, separating it from the main text, but is always preceded by an icon and/or a bold title.

NOTE

NOTE

Indicates additional information as a reference.

Revision History

EDITION	DATE OF ISSUE	REMARKS
00	11. 2009.	First Edition

© SAMSUNG Electronics Co., Ltd.

TABLE OF CONTENTS

INTRODUCTION **I**

Purpose I
Document Content and Organization I
Conventions I
Revision History I

CHAPTER 1. Overview of Mobile WiMAX System **1-1**

1.1 Introduction to Mobile WiMAX 1-1
1.2 Characteristics of the Mobile WiMAX System 1-1
1.3 Mobile WiMAX Network Configuration 1-1
1.4 Mobile WiMAX System Functions 1-1

CHAPTER 2. Overview of SPI-2213 **2-1**

2.1 Introduction to SPI-2213 2-1
2.2 Characteristics of SPI-2213 2-1
2.3 Main Functions 2-1
2.3.1 Physical Layer Processing Function 2-1
2.3.2 Call Processing Function 2-1
2.3.3 IP Processing Functions 2-1
2.3.4 Auxiliary Device Interface Function 2-1
2.3.5 Maintenance Function 2-1
2.4 Specifications 2-1
2.5 System Configuration 2-1
2.6 Interface between Systems 2-1
2.6.1 Interface Structure 2-1
2.6.2 Protocol Stack 2-1
2.6.3 Physical Interface Operation Method 2-1

CHAPTER 3. SPI-2213 Architecture 3-1

3.1 System Configuration 3-1

3.1.1 DU and RRH 3-1

3.1.2 Internal Configuration of the System 3-1

3.2 Detailed Structure 3-1

3.2.1 Digital Main Block (DMB) 3-1

3.2.2 RRH 3-1

3.2.3 DPM-FI 3-1

3.2.4 Cooling Structure 3-1

3.2.5 Interface Structure 3-1

3.3 Software Structure 3-1

3.3.1 Basic Structure 3-1

3.3.2 Call Control (CC) Block 3-1

3.3.3 Operation And Maintenance (OAM) Block 3-1

CHAPTER 4. Message Flow 4-1

4.1 Call Processing Message Flow 4-1

4.1.1 Initial Access 4-1

4.1.2 Authentication 4-1

4.1.3 Status Change 4-1

4.1.4 Location Update 4-1

4.1.5 Paging 4-1

4.1.6 Handover 4-1

4.1.7 Access Termination 4-1

4.2 Network Synchronization Message Flow 4-1

4.3 Alarm Signal Flow 4-1

4.4 Loading Message Flow 4-1

4.5 Operation and Maintenance Message Flow 4-1

CHAPTER 5. Additional Functions and Tools 5-1

5.1 RET 5-1

5.2 Web-EMT 5-1

© SAMSUNG Electronics Co., Ltd.

ABBREVIATION I

A ~ D I
E ~ I I
M ~ P I
Q ~ U I
V ~ W I

INDEX I

A ~ E I
F ~ O I
P ~ T I
U ~ W I

LIST OF FIGURES

Figure 1.1 Mobile WiMAX Network Configuration 1-1
Figure 1.2 Configuration of Mobile WiMAX System Functions (Based on Profile C) 1-1
Figure 1.3 FFT Spectrum Plot of CDD 2-1
Figure 1.4 4T4R with CDD (Matrix A + CDD mode) 2-1
Figure 1.5 4T4R with CDD (Matrix B + CDD mode) 2-1

Figure 2.1 IPv4/IPv6 Dual Stack Operation 2-1
Figure 2.2 DU Configuration (SMFS-F) 2-1
Figure 2.3 RRH Configuration 2-1
Figure 2.4 RRH-2WB Configuration 2-1
Figure 2.5 Structure of SPI-2213 Interface 2-1
Figure 2.6 Protocol Stack between NEs 2-1
Figure 2.7 Protocol Stack between SPI-2213 and WSM 2-1

Figure 3.1 Internal Configuration of the System (MIMO) 3-1
Figure 3.2 Internal Configuration of the System (4T4R with CDD) 3-1
Figure 3.3 DMB Configuration 3-1
Figure 3.4 Sector Configuration Example Using RRH-2 3-1
Figure 3.5 Omni Configuration Example Using RRH-2 3-1
Figure 3.6 DPM-FI Configuration 3-1
Figure 3.7 Power Structure of SPI-2213 3-1
Figure 3.8 Fan Configuration 3-1

© SAMSUNG Electronics Co., Ltd.

Figure 3.9 Cooling Structure of the DU 3-1
Figure 3.10 Interfaces of SPI-2213 (MIMO) 3-1
Figure 3.11 Interfaces of SPI-2213 (4T4R with CDD) 3-1
Figure 3.12 Software Structure of SPI-2213....3-1
Figure 3.13 CC Block Structure....3-1
Figure 3.14 OAM Software Structure 3-1
Figure 3.15 Interface between OAM Blocks....3-1
Figure 3.16 SNMPD Block 3-1
Figure 3.17 OAGS Block....3-1
Figure 3.18 WebEMT Block 3-1
Figure 3.19 CLIM Block 3-1
Figure 3.20 PAM Block....3-1
Figure 3.21 UFM Block 3-1
Figure 3.22 Loader Block 3-1
Figure 3.23 ULM Block 3-1
Figure 3.24 OPM Block....3-1
Figure 3.25 OSSM Block 3-1
Figure 3.26 OER/OEV Block....3-1
Figure 3.27 OCM Block....3-1
Figure 3.28 RDM Block....3-1

Figure 4.1 Initial Access Process 4-1
Figure 4.2 Authentication Procedure (At the time of initial access)....4-1
Figure 4.3 Authentication Procedure (At the time of the Authenticator Relocation)....4-1
Figure 4.4 Awake Mode → Idle Mode Status Change Procedure 4-1
Figure 4.5 Awake Mode ↔ Sleep Mode Status Change Procedure 4-1
Figure 4.6 Idle Mode → Awake Mode (QCS) Procedure....4-1
Figure 4.7 Inter-RAS Location Update Procedure....4-1
Figure 4.8 Inter-ACR Location Update Procedure (CMIP/PMIP Case) 4-1
Figure 4.9 Inter-ACR Location Update Procedure (Simple IP Case) 4-1
Figure 4.10 Paging Procedure 4-1
Figure 4.11 Inter-RAS Handover Procedure 4-1
Figure 4.12 Inter-ASN Handover (ASN-Anchored Mobility) 4-1
Figure 4.13 Inter-ASN Handover (CSN-Anchored Mobility) 4-1
Figure 4.14 Access Termination (Awake Mode)....4-1
Figure 4.15 Access Termination (Idle Mode)....4-1
Figure 4.16 Network Synchronization Flow of SPI-2213 4-1
Figure 4.17 Alarm Signal Flow of SPI-2213 4-1
Figure 4.18 Alarm and Control Structure of SPI-2213....4-1
Figure 4.19 Loading Message Flow 4-1

 © SAMSUNG Electronics Co., Ltd.

Figure 4.20 Operation and Maintenance Signal Flow..... 4-1

Figure 5.1 RET Interface 5-1
Figure 5.2 Web-EMT Interface 5-1

This page is intentionally left blank.

© SAMSUNG Electronics Co., Ltd.

CHAPTER 1. Overview of Mobile WiMAX System

1.1 Introduction to Mobile WiMAX

The Mobile WiMAX system is the wireless network system that supports IEEE 802.16 base service. The IEEE 802.16 standard is the basis of Mobile WiMAX, and includes IEEE Std 802.16-2004 defining fixed wireless internet access service and IEEE Std 802.16, P802.16-2004/Cor/D3 defining the technologies supporting mobility, which include handover, paging.

NOTE

Mobile WiMAX Standard

In this description, the entire Mobile WiMAX standard is expressed IEEE 802.16.

The wireless LAN (Wireless Local Area Network, WLAN) can provide high speed data services, but its radio wave is short and covers only small areas, and also gives limited user mobility. It is difficult for WLAN to ensure Quality of Service (QoS) for data service.
On the contrary, the present mobile communication networks support the mobility of the users, but the service charge and the cost of system operations are high due to the limited wireless resources. To provide faster service in the existing mobile communication networks, it requires a separate wireless communication technology such as High Speed Packet Access (HSPA) for the data services.

Mobile WiMAX can, therefore, overcome the limitations of the WLAN and present mobile communication networks, and accommodate only the advantages of the system.
Mobile WiMAX can ultimately provide the high speed wireless internet services with low cost at any time and in anyplace.

Samsung Mobile WiMAX System provides high speed data services using the transmission technology of Orthogonal Frequency Division Multiple Access (OFDMA) by the Time Division Duplex (TDD), and can give wider coverage compared to the existing WLAN. The system performance and the capacity have been expanded by the high performance hardware, and thus, it can easily give various functions and services to the users.

© SAMSUNG Electronics Co., Ltd.

The Mobile WiMAX system consists of Radio Access Station (RAS), Access Control Router (ACR) and Mobile WiMAX System Manager (WSM). RAS manages 802.16 Medium Access Control (MAC)/Physical Layer (PHY) function for Mobile Station (MS), ACR manages various control functions and interworking function between Mobile WiMAX ASN system and CSN system.

NOTE

System Support Standards

Network Working Group (NWG) of Mobile WiMAX Forum defines the Mobile WiMAX network as Access Service Network (ASN) and Connectivity Service Network (CSN). RAS of Samsung is Base Station (BS) and ACR is ASN-GW (Gateway) of ASN, respectively.
RAS and ACR are based on ASN Profile C and Wave 2 Profile defined in the Mobile WiMAX Forum and the Wave 2 Profile contains Wave 1 Profile.

© SAMSUNG Electronics Co., Ltd.

1.2 Characteristics of the Mobile WiMAX System

The major characteristics of Mobile WiMAX system are listed below.

High Compatibility and Cross-Interworking

The Mobile WiMAX system is based on IEEE 802.16 standard and complies with Wave 2 Profile and ASN Profile C of the Mobile WiMAX Forum. Therefore, the Mobile WiMAX system provides high compatibility and excellent cross-interworking.

High Performance Module Structure

The Mobile WiMAX system has high performance by using high-performance processor and provides the module structure that it is easy to upgrade hardware and software.

High System Stability

The Mobile WiMAX system provides the redundancy structure for main modules to ensure higher stability.

Variant Advance RF and Antenna Solution Support

The Mobile WiMAX system supports Multiple Input Multiple Output (MIMO) and applies the power amplifier to support wideband operation bandwidth.

Evolution Possibility into Next Generation Networking

The Mobile WiMAX system complies with the structure of the Mobile WiMAX ASN Profile C network and the ASN Profile C network composition is similar to the network structure considered in 3GPP Long Term Evolution (LTE)/Service Architecture Evolution (SAE). Therefore, the Mobile WiMAX system can easily evolve into the next generation network.

Maintenance Function with Strengthened Security

The Mobile WiMAX system provides the security function (SNMPv2c/SNMPv3, SSH, FTP/SFTP and HTTPs) to all channels for operation and maintenance. The Mobile WiMAX system provides the operator Authentication, Authorization and Accounting (AAA) function to authenticate the operator and assign the right for system access and stores the operation history in a log.

© SAMSUNG Electronics Co., Ltd.

1.3 Mobile WiMAX Network Configuration

Mobile WiMAX network is composed of ASN and CSN. ACR and RAS are involved in ASN and WSM is the Network Element (NE) to manage ACR and RAS. CSN is composed of AAA server, HA and PCRF server. ASN is connected with CSN by router and switch.

The following diagram shows the composition of Mobile WiMAX network.

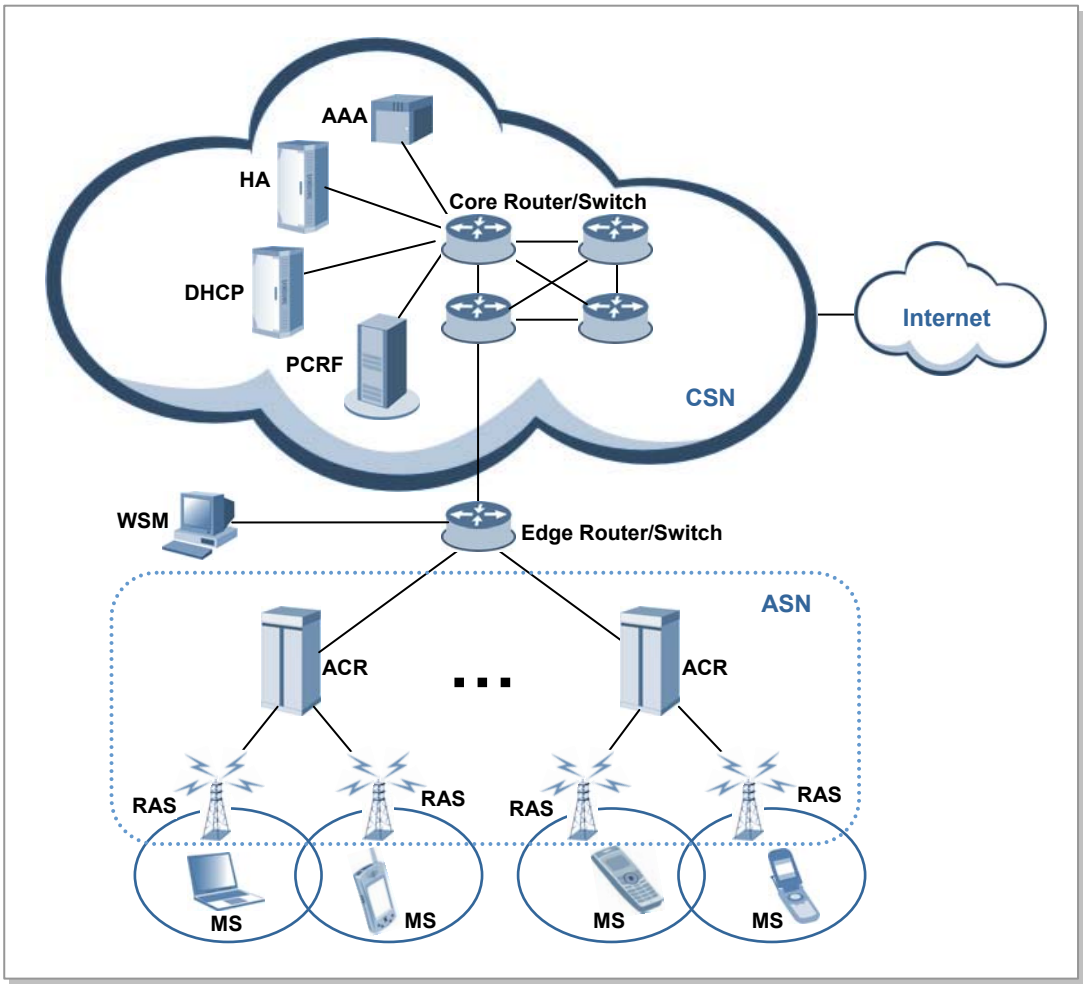

Figure 1.1 Mobile WiMAX Network Configuration

Radio Access Station (RAS)5

RAS as the system between ACR and MS has the interface with ACR and provides the wireless connection to MS under IEEE 802.16 standards to support wireless communication service for subscribers.

RAS carries out wireless signal exchange with MS, modulation/demodulation signal processing for packet traffic signal, efficient use of wireless resources, packet scheduling for Quality of Service (QoS) assurance, assignment of wireless bandwidth, Automatic Repeat request (ARQ) processing and ranging function. In addition, RAS controls the connection for packet calls and handover.

© SAMSUNG Electronics Co., Ltd.

Access Control Router (ACR)

ACR, which is the system between CSN and RAS, enables several RASs to interwork with IP network, sends/receives traffic between external network and MS, and controls QoS. The ACR interfaces with the Authentication, Authorization and Accounting (AAA) server using the Diameter/RADIUS protocols, and with the Policy & Charging Rules Function (PCRF) server using the Diameter protocol. In this way, the ACR provides interfaces for the NEs of the CSN.

Mobile WiMAX System Manager (WSM)

WSM provides the management environment for the operator to operate and maintain ACR and RAS.

Home Agent (HA)

HA accesses other networks or private networks and enables Mobile IP (MIP) users to access internet. HA interworks with ACR that performs Foreign Agent (FA) function for Mobile IPv4 and interworks with MS to exchange data for Mobile IPv6.

Dynamic Host Configuration Protocol (DHCP) Server

The DHCP server allocates IP addresses to simple IP users. When an MS requests an IP address allocation, the DHCP server allocates an IP address in interoperation with the ACR that functions as the DHCP relay agent and sends it to the ACR.

Authorization, Authentication and Accounting (AAA) Server

AAA server interfaces with ACR and carries out subscriber authentication and accounting functions. The AAA server interfaces with ACR via Diameter/RADIUS protocol and provides Extensible Authentication Protocol (EAP) certification.

Policy & Charging Rules Function (PCRF) Server

The PCRF server is the server that manages the service policy and interfaces with ACR via Diameter protocol. The PCRF server sends QoS setting information for each user session and accounting rule information to ACR.

© SAMSUNG Electronics Co., Ltd.

1.4 Mobile WiMAX System Functions

The figure below shows the functions of the ASN systems (ACR and RAS) based on Profile C. Each block name complies with the standard of Mobile WiMAX NWG.

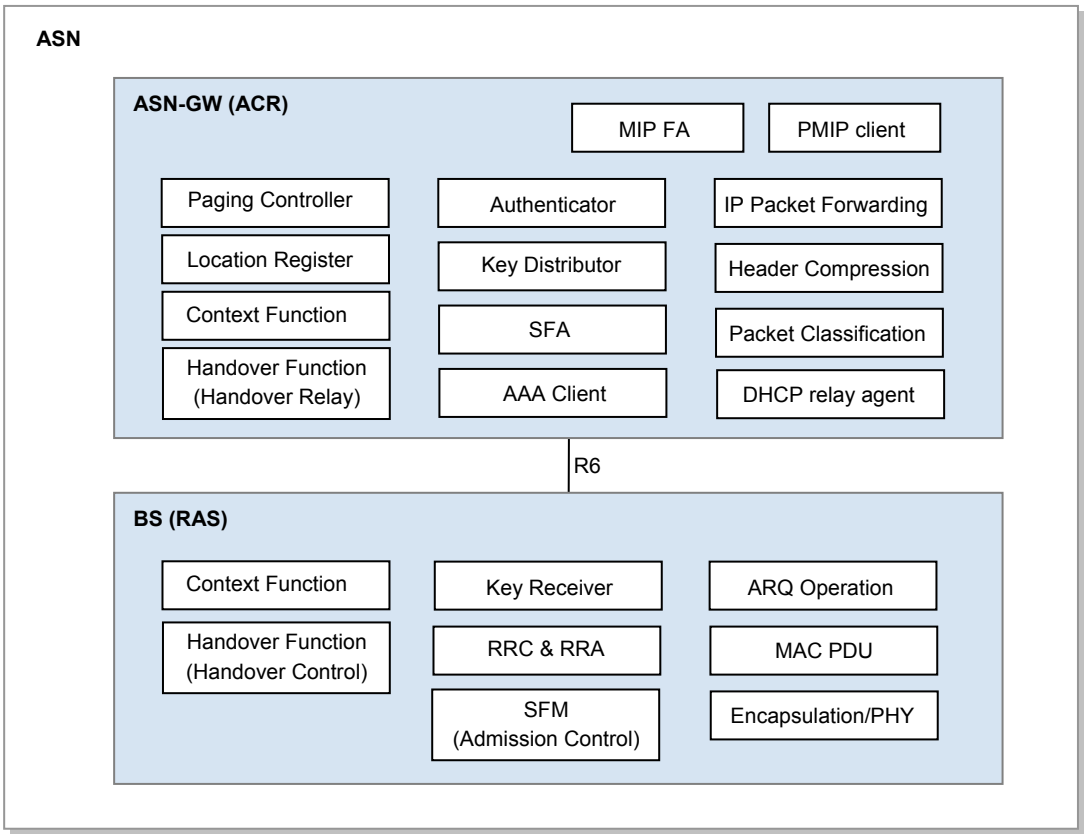

Figure 1.2 Configuration of Mobile WiMAX System Functions (Based on Profile C)

The ACR supports the Convergence Sublayer (CS) and performs the packet classification and Packet Header Suppression (PHS) functions. When the ACR carries out the header compression function, it supports Robust Header Compression (ROHC) defined in the NWG standard.
In addition, the ACR performs the paging controller and location register functions for an MS in Idle Mode.

In authentication, the ACR performs the authenticator function and carries out the key distributor function to manage the higher security key by interworking with the AAA server as an AAA client. At this time, RAS performs the key receiver function to receive the security key from the key distributor and manage it.
The ACR interworks with the AAA server of CSN for authentication and charging services and with the HA of CSN for Mobile IP (MIP) service. The ACR as FA of MIP supports Proxy MIP (PMIP).

© SAMSUNG Electronics Co., Ltd.

The RAS performs the Service Flow Management (SFM) function to create/change/release connections for each Service Flow (SF) and the admission control function while creating/changing connections. In regard to the SFM function of the RAS, the ACR carries out the SF Authentication (SFA) and SFID management functions. The ACR carries out the SFA function to obtain the QoS information from Policy Function (PF) and apply it in the SF creation and performs the SFID management function to create/change/release SFID and map SF according to the packet classification.

In handover, the RAS performs the handover control function to determine the execution of the handover and deal with corresponding handover signaling. The ACR confirms the neighbor RAS list and relays the handover signaling message to the target system.
At this time, the ACR and the RAS carries out the context function to exchange the context information between the target system and the serving system.

The RAS provides Admission Control to collect/manage the MS's radio resource information and the RAS's own radio resource information (e.g., BSID). When load balancing is required based on Admission Control results, it performs resource management through FA overriding and BS init HO (Handover).

NOTE

ASN System Function

For the detailed description about the system functions, refer to the system description for each system provided by Samsung.

This page is intentionally left blank.

© SAMSUNG Electronics Co., Ltd.

CHAPTER 2. Overview of SPI-2213

2.1 Introduction to SPI-2213

The SPI-2213, RAS of Mobile WiMAX, is controlled by ACR and connects Mobile WiMAX calls to MS.

The SPI-2213 interfaces with MS via a wireless channel observing the Mobile WiMAX standard (IEEE 802.16) and provides high-speed data service and multimedia service in wireless broadband.
To this end, the SPI-2213 provides the following functions: modulation/demodulation of packet traffic signal, scheduling and radio bandwidth allocation to manage air resources efficiently and ensure Quality of Service (QoS), Automatic Repeat request (ARQ) processing, ranging function, connection control function to transmit the information on the SPI-2213 and set/hold/disconnect the packet call connection, handover control and ACR interface function and system operation management function.

Physically, the SPI-2213 consists of a Digital Unit (DU) and a Mobile WiMAX base station Remote Radio Head (RRH).
The RRH is located remotely from the DU. The DU is a digital unit of 19 in. shelf form and can be installed in an indoor or outdoor 19 in. rack. It supports a capacity up to 2Carrier/3Sector. The DU is operated in omni or sector mode depending on the features of the installation location.
An RRH is a standalone RF unit. It is installed on an outdoor wall or pole.

The SPI-2213 supports up to 2Carrier/3Sector. The RRH can be operated as follows depending on the type.

- RRH-2 (RRH-2LB/RRH-2UB): 2Tx/2Rx RF path, MIMO mode
- RRH-2WB: 4Tx/4Rx RF path, 4T4R with CDD (Matrix A/B + CDD) mode

2.2 Characteristics of SPI-2213

The SPI-2331 supports 5MHz/10 MHz bandwidth per carrier and has a large packet service in high speed. Other features are as follows.

Application of the OFDMA Method

OFDMA is used to transmit data to several users simultaneously by using the sub-carrier allocated to each user and transmit data by allocating one or more sub-carriers to a specific subscriber according to the channel status and the transmission rate requested by a user.
In addition, since it can select the sub-carriers with excellent features for each subscriber and allocate them to the subscribers when some subscribers divide and use the whole sub-carrier, it can raise the data throughput by distributing the resources efficiently.

Separate DU and RRH Structure

As the SPI-2213 consists of a DU and an RRH, it is easy to set up a network and it is easy to change the network configuration.
For connections between the DU and RRH, data traffic signals and OAM information are sent/received through the 'Digital I/Q and C & M' interface based on the Common Public Radio Interface (CPRI). Physically, optic cables are used.
Each of the DUs and RRHs receives -48 VDC of power for its operation.

- Versatile Network Operation
  The RRH cannot operate on its own, but operates by being linked to the DU. The RRH is highly flexible in its installation, and helps with setting up a network in a variety of configurations depending on the location and operation method.
- Easy Installation
  The optic interface component that interfaces with the DU and the RF signal processing component is integrated into the RRH, which becomes a very small and very light single unit. Therefore, the RRH can be installed on a wall or pole.
  Moreover, as the distance between the RRH and antenna is minimized, the loss of RF signals due to the antenna feeder line can be reduced so that more enhanced RF receiving performance than the existing rack-type RAS can be provided.
- Natural Cooling
  Because the RRH is installed outdoors and has an efficient design, it can radiate heat efficiently without any additional cooling system. Therefore, no additional maintenance cost is needed for cooling the RRH.
- Loopback Test
  The SPI-2213 provides the loopback test function to check whether communication is normal on the 'Digital I/Q and C & M' interface line between the DU and RRH.
- Remote Firmware Downloading
  The operator can upgrade the RRH and its service by replacing its firmware.
  Without visiting the field station, the operator can download firmware to the RRH remotely using a simple command from the WSM.
  In this way, operators can minimize the number of visits to the field station, reducing maintenance costs and allowing the system to be operated with greater ease.

© SAMSUNG Electronics Co., Ltd.

- Monitoring Port
  Operators can monitor the information for an RRH using its debug port.

Support of MIMO

The SPI-2213 supports MIMO through the 2Tx/2Rx RF path of the RRH-2 (RRH-2LB/RRH-2UB). There are the following methods in MIMO.

- Downlink
  - Space Time Coding (STC): method for raising reliability of link
  - Spatial Multiplexing (SM): method for raising data transmission rate
- Uplink
  Collaborative SM (CSM): method for doubling the frequency efficiency

Support of Cyclic Delay Diversity (CDD)

The CDD sends the data stream that is the same as a data stream repeatedly using frequency diversity. Therefore, the air performance of the Mobile WiMAX system can be improved using CDD.

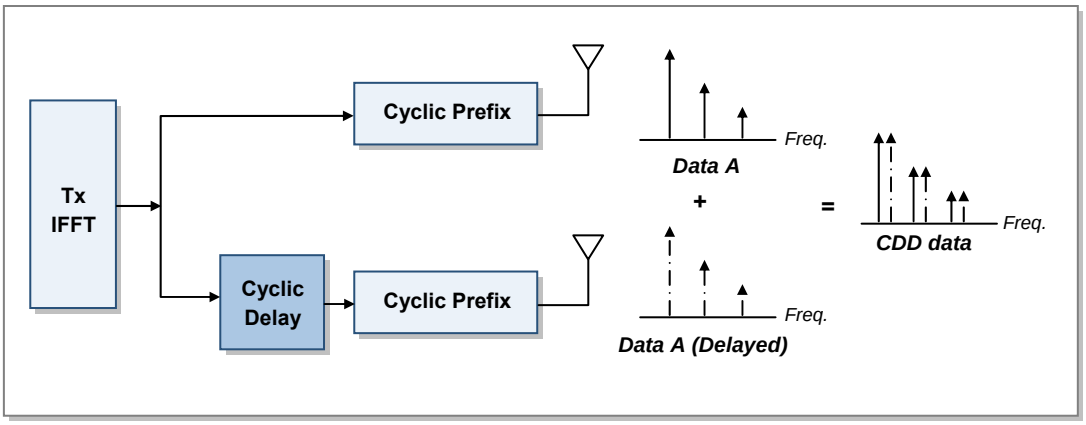

Figure 1.3 FFT Spectrum Plot of CDD

Support of Frequency Reuse Pattern (FRP)

The SPI-2213 supports FRP N=1 that provides the service to 3-sector by using a carrier and FRP N=3 that provides the service to 3-sector by using different carriers.
A service provider can efficiently operate its own frequency resources by using the FRP function.

NOTE

Providing or not the System Feature and Schedule to Provide the System Feature

For the providing or not the system feature and schedule to provide the features described in this system description, see separate document.

2.3 Main Functions

The main functions of the SPI-2213 are as follows:

- Physical layer processing function
- Call processing function
- IP processing functions
- Auxiliary device interface function
- Convenient operation and maintenance function

2.3.1 Physical Layer Processing Function

OFDMA Ranging

The ranging supported by the OFDMA system is roughly divided by the uplink timing synchronization method and the contention based bandwidth request method.

- Uplink Timing Synchronization
  In the uplink timing synchronization method, the SPI-2213 detects the timing error of the uplink signal by using the ranging code transmitted from MS and transmits the timing correction command to each MS to correct the transmission timing of the uplink. The uplink timing synchronization method has initial ranging, periodic ranging, handover ranging, etc.
- Contention Based Bandwidth Request
  In the contention based bandwidth request method, the SPI-2213 receives the bandwidth request ranging code from each MS and allocates uplink resources to the corresponding MS to enable to transmit the bandwidth request header.
  The contention based bandwidth request method has bandwidth request ranging or something.

Channel Encoding/Decoding

The SPI-2213 carries out the Forward Error Correction (FEC) encoding for the downlink packet created in the upper layer by using Convolutional Turbo Code (CTC).
On the contrary, it decodes the uplink packet received from the MS after demodulating.

Modulation/Demodulation

The SPI-2213 carries out the FEC encoding for the downlink packet created in the upper layer and modulates the encoded packet into the QAM signal. In addition, the SPI-2213 demodulates and decodes the uplink packet received from MS.

© SAMSUNG Electronics Co., Ltd.

OFDMA Sub-carrier Allocation

The subchannelization is the process to tie the sub-carriers of OFDMA as a transmission unit after grouping them by a certain rule. The SPI-2213 performs the subchannelization to mitigate the interference between cells.
The SPI-2213 maps the column of the modulated downlink QAM symbol structure with each sub-carrier and carries out the subchannelization when the column of the QAM symbol structure is transmitted to the MS over the wireless line. In such way, the SPI-2213 transmits the column of the QAM symbol structure to the MS via the sub-carriers pertained to each subchannel.

DL/UL MAP Construction

The SPI-2213 informs the air resources for the uplink and the downlink to the MS by using DL/UL MAP. The DL/UL MAP consists of the scheduling information of the SPI-2213 and includes various control information for the MS.

Power Control

The SPI-2213 carries out the power control function for the uplink signal received from multiple MSs and then set the power intensity of the uplink signal to a specific level.
The SPI-2213 transmits the power correction command to each MS and then makes the MS power intensity be the level required in the SPI-2213 when the MS transmits the modulated uplink signal in a specific QAM modulation method.

Hybrid-ARQ (H-ARQ) Operation

H-ARQ is the physical layer retransmission method using the stop-and-wait protocol.
The SPI-2213 carries out the H-ARQ function and raises data throughput by re-transmitting or combining the frame from the physical layer to minimize the effect attending to the change of wireless channel environment or the change in the interference signal level.

MIMO

The SPI-2213 provides the MIMO function as follows according to Mobile WiMAX Wave 2 Profile:

- Downlink
  - Matrix A (STC)
    Transmission ratio of the Matrix A or STC is 1 and equal to that of Single Input Single Output (SISO). However The Matrix A or the STC reduces the error of the signal received from the MS by raising the stability of the signal received from the MS by means of the Tx diversity. This technology is, also, effective in low Signal to Noise Ratio (SNR) and provides excellent performance even when the MS moves in high speed.
  - Matrix B (SM, vertical encoding)
    Matrix B or SM method raises the effectiveness of the frequency by raising the transmission ratio in proportion to the number of antenna in comparison with SISO. This technology is effective when the reception SNR is high.

- Uplink
  - Collaborative SM
    Collaborative SM is the technology that doubles the frequency efficiency in view of the SPI-2213 as two MSs with each individual antenna send data simultaneously by using the same channel.

The SPI-2213 provides the adaptive MIMO switching function which selects the SM or STC method dynamically for the downlink MIMO function. The SPI-2213 performs switching based on a value calculated by reflecting the Carrier to Interference and Noise Ratio (CINR) and transmission success rate sent by an MS.

4T4R with CDD

The SPI-2213 provides the 4T4R with CDD for which the frequency diversity is applied to downlink by adapting the RRH-2WB that provides the 4Tx/4Rx RF path. The 4T4R with CDD is that the CDD function is added to the MIMO function, it is divided into the following two modes according to the MIMO mode.

- Matrix A (STC) + CDD
- Matrix B (SM) + CDD

The SPI-2213 switches dynamically to the two 4T4R with CDD modes given above depending to the CINR and transmission success rate reported by an MS. At this time, the Collaborative SM (CSM) is applied to the uplink.

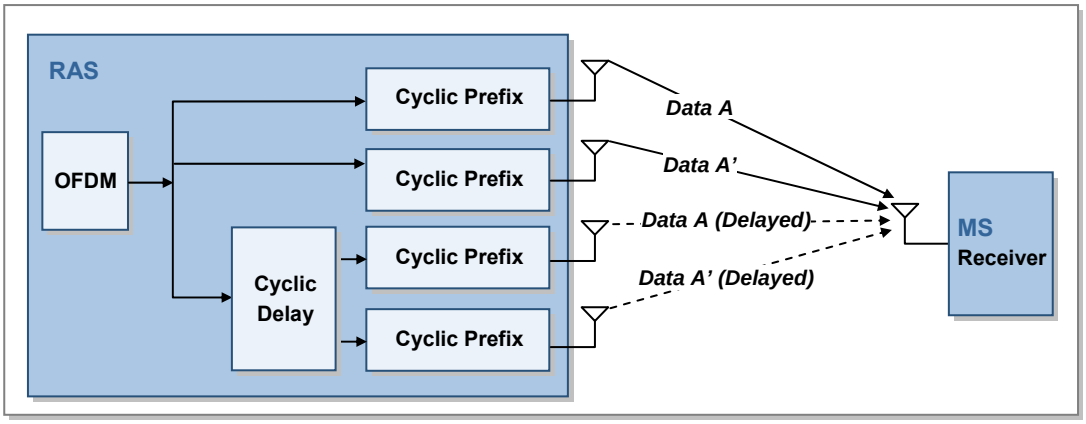

Figure 1.4 4T4R with CDD (Matrix A + CDD mode)

© SAMSUNG Electronics Co., Ltd.

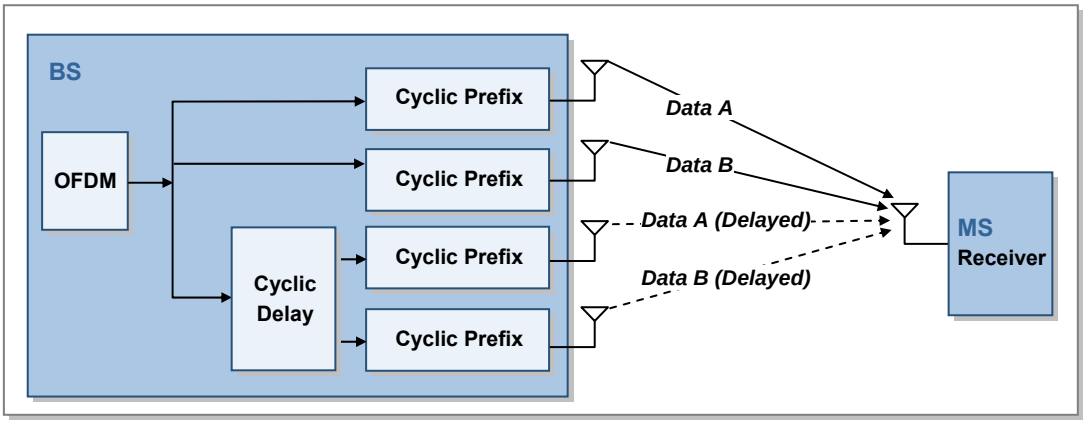

Figure 1.5 4T4R with CDD (Matrix B + CDD mode)

2.3.2 Call Processing Function

Cell Initialization Function

The SPI-2213 announces the MAC Management message such as DCD/UCD/MOB_NBR-ADV to the cell area in service periodically to enable the MS receiving the message to carry out the appropriate call processing function.

Call Control and Wireless Resource Allocation Function

The SPI-2213 enables an MS to enter to or exit from the network. When an MS enters to or exit from the network, the SPI-2213 transmits/receives the signaling message required for call processing via R1 interface with the MS or R6 interface with ACR.
The SPI-2213 allocates various management/transport Connection Identifier (CID) required for the network entry and service to an MS. When the MS exit from the network, the SPI-2213 collects and release the allocated CID.

Handover

The SPI-2213 carries out the signaling and bearer processing for inter-sector HO (Handover), inter-ACR HO and inter-carrier HO. At this time, ACR relays the handover message between serving RAS and target RAS through the R6 interface.
To minimize the traffic disconnection in inter-RAS HO, the SPI-2213 performs the data switching function. In handover, the SPI-2213 enables the serving RAS to switch the user data in queuing to the target RAS and, therefore, the MS to recover the traffic without loss.

NOTE

Handover Procedure

For the detailed handover procedure, refer to Chapter 4 ‘Message Flow’.

Support of Sleep Mode

Sleep Mode is the mode defined to save the MS power under IEEE 802.16 standard and indicates the status that air resources allocated to an MS are released when the MS does not need traffic reception/transmission temporarily. If the MS in Sleep Mode needs the traffic reception/transmission, the MS returns to the normal status immediately.
Both Idle Mode and Sleep Mode are modes to save the MS power. The Idle Mode release all service flows allocated to an MS, while the Sleep Mode releases only the air resources between the MS and RAS temporarily, continuously keeping the service flow information allocated to the MS.

The SPI-2213 carries out the related call processing function by receiving/sending the signaling message required for the status transition into Sleep Mode of MS and the return from the Sleep Mode to Awake Mode of MS.

Admission Control (CAC) Function

If the SPI-2213 receives the call setup request, such as network entry, Quick Connection Setup (QCS) and handover, from an MS, it monitors the traffic and signaling load for each subcell and the number of user in Active/Sleep Mode and performs the AC function to prevent the system overload.
AC can be roughly divided into AC by MS and AC by service flow.

- AC by MS
  If the number of users who the subcell is in Active/Sleep Mode exceeds the threshold when the SPI-2213 receives the call setup request from an MS, it rejects the call setup request of the MS.
- AC by service flow
  When service flow is added, the SPI-2213 checks if the air resources of the requested subcell exceed the threshold and determines the creation of the service

MAC ARQ Function

The SPI-2213 carries out the ARQ function of the MAC layer. In packet data exchange, the transmission side transmits ARQ block which SDU is divided into, and retransmits the packet according to the ARQ feedback information received from the reception side to raise the reliability of data communication.
The SPI-2213 carries out the following function for the service flows applying ARQ:

- MAC Management creation and transmission concerned with ARQ operation
- Feedback processing depending on ARQ types
- Block processing (fragmentation/reassemble/retransmission) depending on ARQ types
- ARQ timer/window management

© SAMSUNG Electronics Co., Ltd.

QoS Support Function

The packet traffic exchanged between ACR and SPI-2213 is delivered to the modem in the SPI-2213. At this time, the SPI-2213 allocates the queue in the modem to each service flow that QoS type is specified to observe the QoS constraint given for each QoS class or service flow and performs the strict-priority scheduling according to the priority.
The modem that receives the packet traffic performs the scheduling by using the uplink/downlink algorithm, such as Proportional Fair (PF) or Round Robin (RR) and transmits the scheduled allocation information to an MS through DL/UL MAP. The MS receiving the DL/UL MAP checks the air resources allocated to the MS and modulates/demodulates the downlink packet or transmits the uplink packet from the allocated uplink area.
Since the SPI-2213 provides the QoS monitoring function, it can compile statistics on packets unsatisfying the latency requested from the QoS parameter according to TDD frames and report the statistics to an operator via the OAM interface.

© SAMSUNG Electronics Co., Ltd.

2.3.3 IP Processing Functions

IP QoS Function

Since the SPI-2213 supports Differentiated Services (DiffServ), it can provide the backhaul QoS in the communication with ACR.
It supports 8-class DiffServ and supports the mapping between the DiffServ service class and the service class of the user traffic received from an MS. In addition, the SPI-2213 supports the mapping between Differentiated Services Code Point (DSCP) and 802.3 Ethernet MAC service class.

Simultaneous Support of IPv4/IPv6

ACR communicates with the SPI-2213 through the GRE tunnel and the backhaul IP version between the SPI-2213 and ACR is managed independently from the service IP version for the MS.
Even if, therefore, IPv4 is used in backhaul between the SPI-2213 and ACR, all of IPv4, IPv6 and IPv4/IPv6 dual stack services can be supported for the MS.

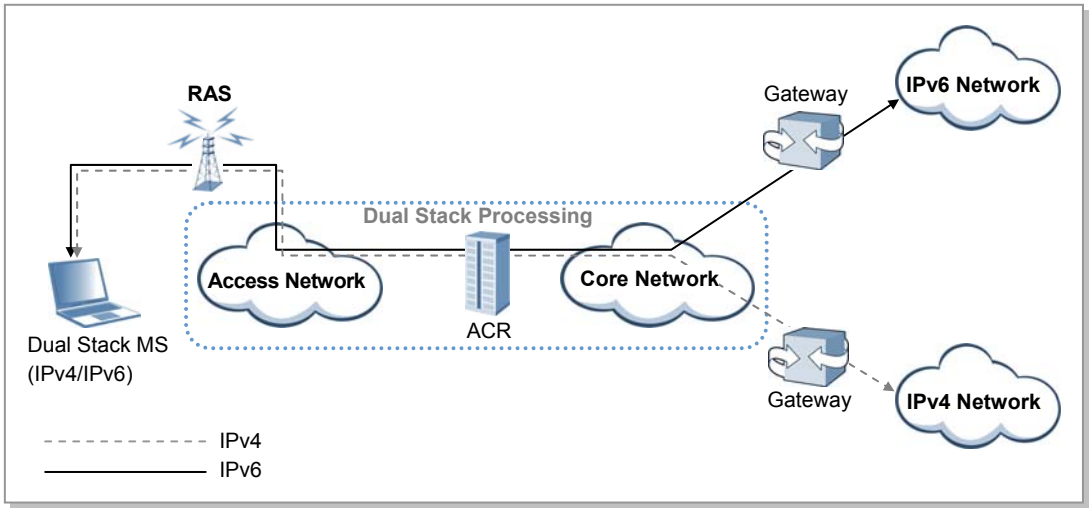

Figure 2.1 IPv4/IPv6 Dual Stack Operation

IP Routing Function

Since the SPI-2213 provides several Ethernet interfaces, it stores the routing table with the information on the Ethernet interface to route IP packets. The routing table of the SPI-2213 is configured depending on operator's setting and the configuration and the setting of the routing table are similar to the standard setting of the router.
The SPI-2213 supports the static routing configuration only and not the router function for the traffic received from the outside. When the SPI-2213 connects an auxiliary device, it supports the IP packet routing function for the auxiliary device by using Network Address Translation (NAT).

© SAMSUNG Electronics Co., Ltd.

Ethernet/VLAN Interface Function

The SPI-2213 provides the Ethernet interface and supports the static link grouping function, Virtual Local Area Network (VLAN) function and Ethernet CoS function under IEEE 802.3ad for the Ethernet interface. At this time, the MAC bridge function defined in IEEE 802.1D is excluded.

The SPI-2213 enables several VLAN IDs to be set in one Ethernet interface and maps the DSCP value of IP header with the CoS value of Ethernet header in Tx packet to support Ethernet CoS.

2.3.4 Auxiliary Device Interface Function

The SPI-2213 provides the Ethernet interface to connect auxiliary devices and allocates IP addresses by operating as a DHCP server for the auxiliary devices. In addition, the SPI-2213 provides the traffic path to transmit/receive the maintenance traffic between an auxiliary device and the remote auxiliary device monitoring server.
If the auxiliary device uses a private IP address, the SPI-2213 carries out the NAT function to change the address into a public IP address (i.e., the IP address of the SPI-2213) for the communication with an external monitoring server.

2.3.5 Maintenance Function

The SPI-2213 interworking with the management system carries out the following maintenance functions: system initialization and restart, management for system configuration, management for the operation parameters, failure and status management for system resources and services, statistics management for system resources and various performance data, diagnosis management for system resources and services and security management for system access and operation.

Graphic and Text-based Console Interface

WSM manages the entire Mobile WiMAX system by using Database Management System (DBMS) and SPI-2213 interworks with this WSM. In addition, ACR interworks with the console terminal for directly accessing the NE as well as WSM by operator to perform the operation and maintenance function.

For operator’s convenience and working purpose, the operator can select graphic-based console interface (Web-based Element Maintenance Terminal, Web-EMT) or text-based console interface (Integrated Management Interface Shell, IMISH).
The operator can access the console interface with no separate software and log in to Web-EMT through Internet Explore and IMISH through Secure Shell (SSH) on the command window.
The operator can carry out the retrieval and setup of the configuration and the operation information and monitoring about faults, status and statistics via console terminal.
However, the operator can carry out grow/degrow of resources and setting of the neighbor list and paging group which have correlation between several NEs only via the WSM.

Operator Authentication Function

The SPI-2213 provides the authentication and the permission management functions for the operator who manages the Mobile WiMAX system. The operator accesses the SPI-2213 by using the operator's ID and password via Web-EMT or IMISH and the SPI-2213 assigns the operation right in accordance with the operator's level.
The SPI-2213 carries out the logging function for successful access, access failure and login history.

Maintenance Function with Enhanced Security Function

For the security, the SPI-2213 supports Simple Network Management Protocol version 2c (SNMPv2c) Simple Network Management Protocol version 3 (SNMPv3) and File Transfer Protocol (FTP) in the communication with WSM and Hyper Text Transfer Protocol over SSL (HTTPs) and Secure Shell (SSH) in the communication with console terminals.

On-line Software Upgrade

When a software package is upgraded, the SPI-2213 can upgrade the package while running old version of software package. The package upgrade is progressed in the following procedure: 'Add New Package → Change to New package → Delete Old Package'.

In package upgrade, the service is stopped temporarily because the old process is terminated and the new process is started in the 'Change to New package' stage.
However, since OS is not restarted, the service will be provided again within a few minutes.

After upgrading software, the SPI-2213 updates the package stored in a non-volatile storage. In addition, the SPI-2213 can re-perform the 'Change to New package' stage to roll back into the previous package before upgrade.

Call Trace Function

The SPI-2213 supports the call trace function for a specific MS. The SPI-2213 can carry out the call trace function up to 10 MSs. If a call occurs in the MS that an operator previously specified via ACR, the signaling message and statistical traffic data are transmitted to WSM. Besides, the SPI-2213, also, sends the RF environment information, such as Carrier-to-Interference-and-Noise-Ratio (CINR) for MS, Modulation and Coding Schemes (MCS) level and Burst Error Rate (BER).

Detailed Information for Each Session and Service Flow (PSMR/PSFMR)

The Mobile WiMAX system of Samsung collects and stores detailed information of all sessions (Per Session Measurement Record, PSMR) and detailed information of all service flows (Per Service Flow Measurement Record, PSFMR) to provide it to an external log server. When a session or service flow is created, the Mobile WiMAX system starts to collect relevant information, and when the session or service flow terminates, the system creates and stores a message in a file so that the external log server can collect the message.

© SAMSUNG Electronics Co., Ltd.

The information collected by the ACR includes session termination time, initial and final handover information (handover types, cell information), and the MAC address and IP address allocated to the MS. The SPI-2213 collects such information as MS MAC addresses, continued session time, continued service flow time, turnaround time for network entry, CID, SFID, initial and final wireless quality information (RSSI, CINR, Tx power), and throughput information.

The ACR deliver the information collected by ACR to the SPI-2213, and the SPI-2213 creates and stores a file for each period.

Threshold Cross Alert (TCA) Control

The SPI-2213 defines under/over threshold for statistics. When a statistical value collected at Bucket Interval (15, 30, and 60 minutes) is lower than the under threshold, it generates an under TCA alarm. When the value is higher than the over threshold, it generates an over TCA alarm. The alarms are reported to the WSM. TCA can enable or disable details of each statistical group and set a threshold per severity.

IEEE 802.3ah

The SPI-2213 provides IEEE 802.3ah Ethernet OAM for a backhaul interface. Although IEEE 802.3ah OAM pertains the PHY layer, it is located in the MAC layer so that it can be applied to all IEEE 802.3 PHYs. It creates or processes 802.3ah OAM frames according to the functions defined in the specification.
Ethernet OAM continuously monitors the connection between links at each end, and also monitors discovery, remote loopback, and error packets which deliver important link events such as Dying Gasp. It also includes a link monitoring function which delivers event notification in the event of threshold errors, and a variable retrieval function for 802.3ah standard MIB.
The SPI-2213 supports 802.3ah Ethernet OAM passive mode such as responding to 802.3ah OAM which is triggered in external active mode entities and loopback mode operation, and sending event notification.

Integrity Check

The SPI-2213 proactively checks whether system configuration or operation information (PLD) is in compliance with operator commands during system loading or operation, and also checks whether system settings are OK and there is no problem with call processing. If the result is not OK, it sends an alarm to the operator. That is, it checks whether system configuration meets the minimum configuration conditions for call processing or whether all operation information consists of valid values within an appropriate range. The result is reported to the operator to help with correction of errors.

OAM Traffic Throttling

The SPI-2213 provides a function that suppresses OAM related traffic which can occur in the system depending on the operator command. The OAM related traffic includes fault trap messages for alarm reports and statistics files that are created periodically.
In a fault trap, the operator can use an alarm inhibition command to suppress alarm generation for all or some of system fault traps. This helps control alarm traffic.
In a statistics file, the operator can use commands for statistics collection configuration to control the size of statistics file by disabling collection functions of each statistics group.

Throughput Test

The SPI-2213 provides a throughput test for the backhaul to the ACR. The SPI-2213 supports a server and client function for throughput tests.
The operator can set up target IP addresses, test duration, and bandwidths for throughput tests, and check throughput and loss as test results. However, as the throughput test affects system performance and call services, it is recommended not to perform the test during in-service.

System Log Control

The SPI-2213 provides a log and log control function per application.
An application log can be created by an operator command or its debug level can be set.
The operator can usually keep the log function disabled, and when the log function is necessary, he can change the debug level (Very Calm, Calm, Normal, Detail, Very Detail) to enable logging and log save functions.
However, enabling log functions for many applications while the SPI-2213 is running may affect the system performance.

Disabling Zero Code Suppression (ZCS)

The SPI-2213 collects statistics data and generates statistics files periodically.
The WSM collects these statistics files. A statistics file is composed of the header used to indicate a statistics group and its detailed index (for example, a specific carrier, sector, CPU, port, etc.) and the statistics data for that index.
In a statistics period, the statistics data for a specific index can become zero in a statistics file in the following cases:

- When the index does not actually exist in the configuration.
- When the index exists in the configuration but its statistics data collected during that period is zero.

Therefore, the Disabling ZCS function, which sets the zero data flag in the sub index header, is provided to recognize the two cases separately.

© SAMSUNG Electronics Co., Ltd.

Configuration Management for Various Types of RRHs

The SPI-2213 provides the configuration management function for various types of RRHs. The SPI-2213 recognizes an RRH (RRH-2UB/RRH-2LB/RRH-2WB) that meets the multi-antenna configuration (2T2R MIMO, 4T4R with CDD) and the carrier frequency information that the operator selected when growing the RAS, and provides an alert if a wrong RRH is connected.

2.4 Specifications

Capacity

The capacity of the SPI-2213 is as follows:

Category	System Capacity
Channel Bandwidth	5MHz/10 MHz
RF Band	2,496~2,690 MHz (196MHz)
Maximum Number of Carriers/Sectors	2Carrier/3Sector
Interface between ACR and SPI-2213	Select one of Fast Ethernet and Gigabit Ethernet
FFT size/Carrier/Sector	1,024
Channel Card Capacity	1Carrier/1Sector
Output	Antenna Port-based - 2.5 W/Carrier/Path @ 5 MHz, 4T4R with CDD - 5 W/Carrier/Path @ 10MHz, 4T4R with CDD

Input Power

The table below lists the power standard for the SPI-2213.

Category	Standard
System Input Voltage [a)]	-48 VDC (Voltage Variation Range: -40~-56 VDC)

a) Each of the DU and RRH receives -48 VDC of power for its operation.

Unit Size and Weight

The table below lists the size and weight of the SPI-2213.

Category		Standard
Size (mm)	DU	432 (W) × 396 (D) × 200 (H)
	RRH-2LB/RRH-2UB	295 (W) × 135 (D) × 410 (H)
	RRH-2WB	354 (W) × 112 (D) × 504 (H)
Weight (kg)	DU	20 or less
	RRH-2LB/RRH-2UB	15 or less
	RRH-2WB	20 or less

© SAMSUNG Electronics Co., Ltd.

Environmental Condition

The table below lists the environmental conditions and related standards such as operational temperature and humidity.

- DU

Category	Range
Temperature Condition[a)]	0~50°C (32~122°F)
Humidity Condition[a)]	10~90% but not to exceed 0.024 kg water/kg of dry air
Altitude	0~1,800 m (0~6,000 ft)
Vibration	GR-63-CORE Sec.4.4 Earthquake Office Vibration Transportation Vibration
Sound Pressure Level	Less than 65 dBA measured at points 1.5 m (59.1 in) above the floor and 0.6 m (23.6 in) all around.
EMI	FCC Title47 Part 15 Class A GR-1089-CORE Sec. 3.2 Emission Criteria

a) The standards of temperature/humidity conditions are based on the value on the position where is 400 mm (15.8 in.) away from the front of the DU and in the height of 1.5 m (59 in.) on the bottom.

- RRH

Category	Range
Temperature Condition[a)]	-40~50°C (-40~122°F)
Humidity Condition [a)]	10~95% but not to exceed 0.024 kg water/kg of dry air
Altitude	0~1,800 m (0~6,000 ft)
Vibration	GR-63-CORE Sec.4.4 Earthquake Office Vibration Transportation Vibration
Sound Pressure Level	Less than 65 dBA measured at 1.5 m (5 ft) from the RRH in all horizontal directions at a height of 1 m (3 ft)
EMI	FCC Title47 Part 15 Class B GR-1089-CORE Sec. 3.2 Emission Criteria
US Federal Regulation	FCC Title47 Part27

a) The standards of temperature/humidity conditions are based on the value on the position where is 400 mm (15.8 in.) away from the front of the RU and in the height of 1.5 m (59 in.) on the bottom.

Environmental Alarm

The table below lists the environmental alarm provided in the SPI-2213 in default.

Category	Description
Temperature Alarm	High Temperature
Fan Fail	System Fan Fail

GPSR Specification

The table below lists the GPS Receiver (GPSR) characteristics of SPI-2213.

Category	Description
Received Signal from GPS	GPS L1 Signal
Accuracy/Stability	0.02 ppm

RF Specification

The table below lists the RF characteristics of the SPI-2213.

Category	Description
Tx Output Power	5MHz Bandwidth: 10W @avg power per carrier/sector 10MHz Bandwidth: 20W @avg power per carrier/sector
Tx Constellation error	In accordance with the 802.16e standard
RX Sensitivity	In accordance with the 802.16e standard

© SAMSUNG Electronics Co., Ltd.

2.5 System Configuration

Physically, the SPI-2213 consists of a DU and RRHs.
The boards that make up the DU are mounted on the SMFS-F, which is a 19 in. indoor shelf.
The SMFS-F can be mounted on a 19 in. indoor or outdoor commercial rack.

- Samsung Mobile WiMAX Flexible Shelf assembly-Front mount (SMFS-F)
  - Shelf for DU of SPI-2213
  - Mounting is supported when mounted on a 19 in. rack.

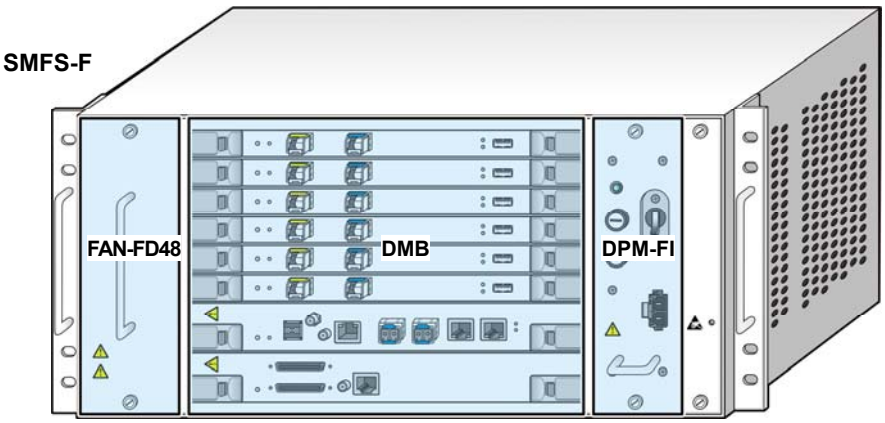

DPM-FI	DC Power Module-Flexible Indoor
DMB	Digital Main Block
FAN-FD48	FAN Module-Flexible Digital unit -48 VDC

Figure 2.2 DU Configuration (SMFS-F)

The RRH is a single unit that can be installed on a wall or pole without an additional shelf or rack.

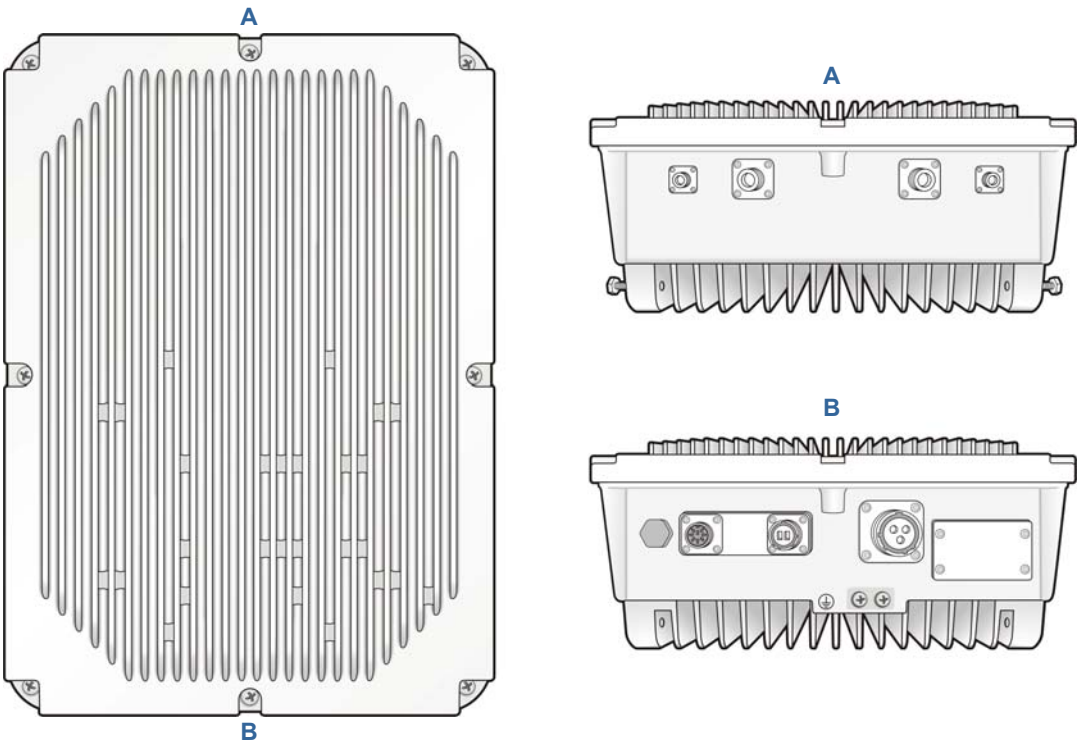

Figure 2.3 RRH Configuration

© SAMSUNG Electronics Co., Ltd.

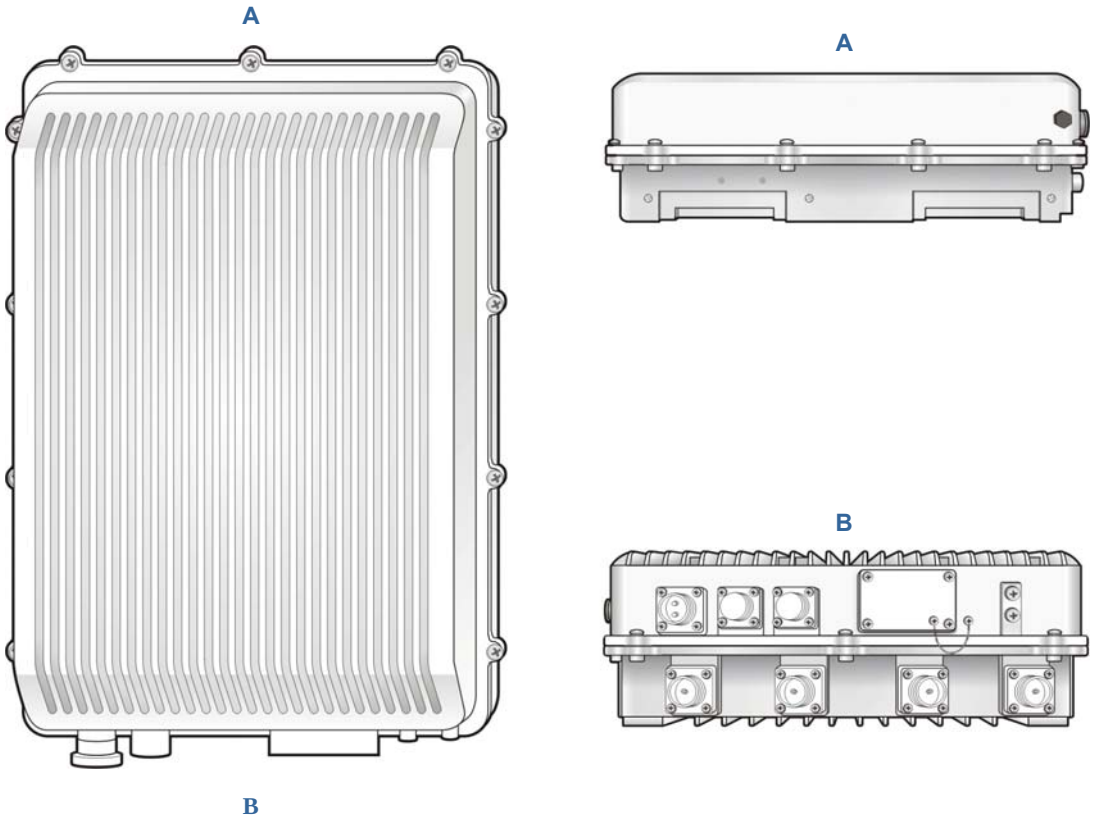

Figure 2.4 RRH-2WB Configuration

2.6 Interface between Systems

2.6.1 Interface Structure

The SPI-2213 interfaces with another RAS and ACR as shown in the figure below:

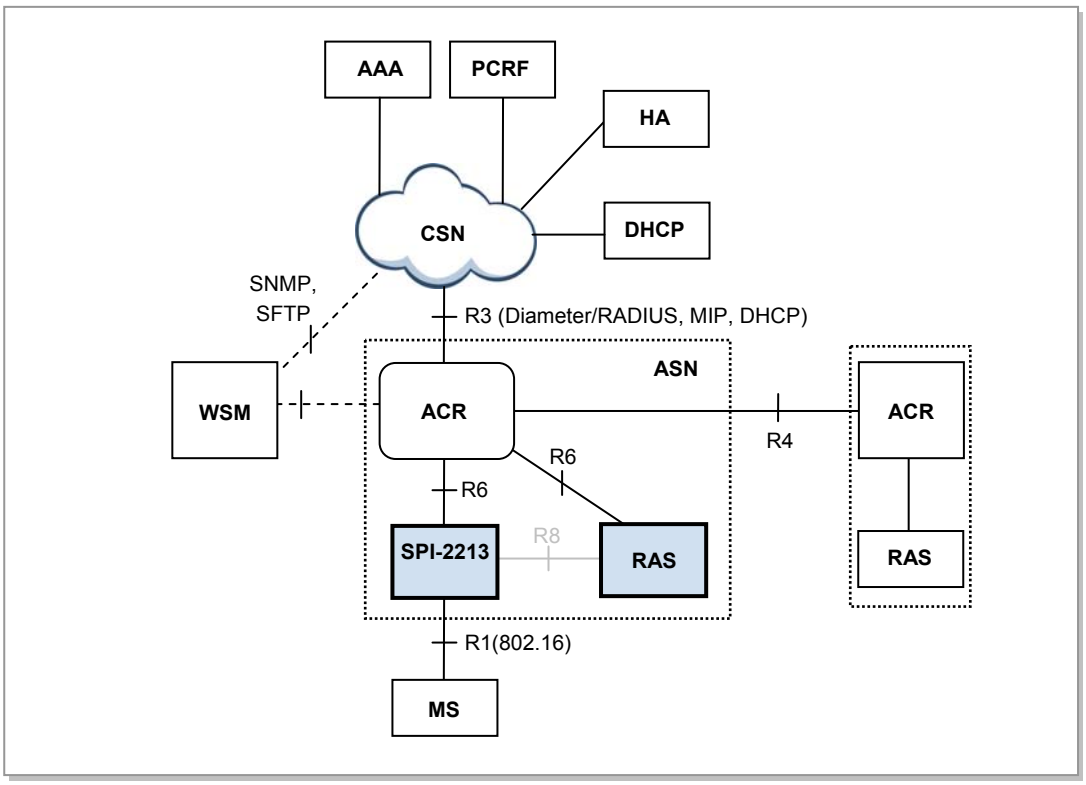

Figure 2.5 Structure of SPI-2213 Interface

Interface between SPI-2213 and MS

The SPI-2213 interfaces with an MS according to the IEEE 802.16 radio access standard to exchange the control signal and the subscriber traffic.

Interface between SPI-2213 and ACR

The interface between an ACR and the SPI-2213 in the same ASN is R6 and its physical access method is GE/FE. The R6 is the interface between ACR and RAS defined in Mobile WiMAX NWG and is composed of signaling plane (IP/UDP/R6) and bearer plane (IP/GRE).

Interface between SPI-2213 and WSM

The interface between the SPI-2213 and the WSM complies with SNMPv2c or SNMPv2c/SNMPv3c of IETF standard, FTP/SFTP and proprietary standard of Samsung and its physical access method is GE/FE.

© SAMSUNG Electronics Co., Ltd.

2.6.2 Protocol Stack

Protocol Stack between NEs

The figure below shows the protocol stack between NEs.

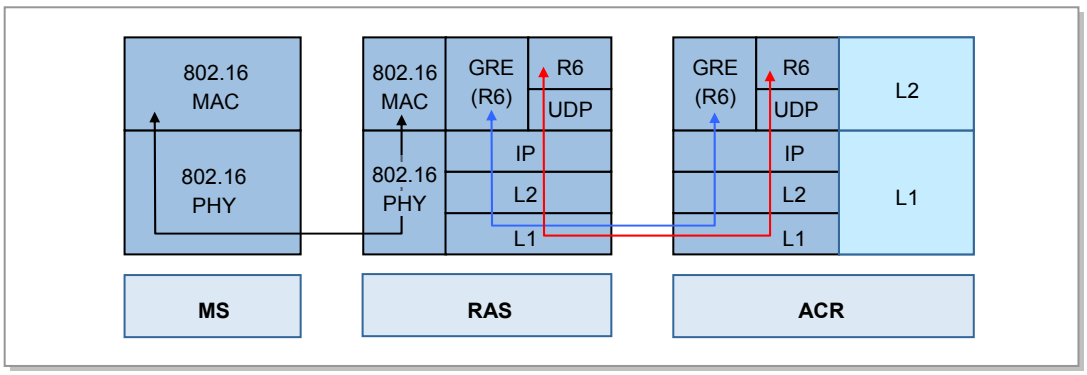

Figure 2.6 Protocol Stack between NEs

The SPI-2213 interworks with MSs via R1 interface according to IEEE 802.16 standard and the interface between the SPI-2213 and ACR is R6 interface.
The R6 signaling interface is executed on UDP/IP and the R6 traffic interface uses the GRE tunnel.

Protocol Stack for Operation and Maintenance

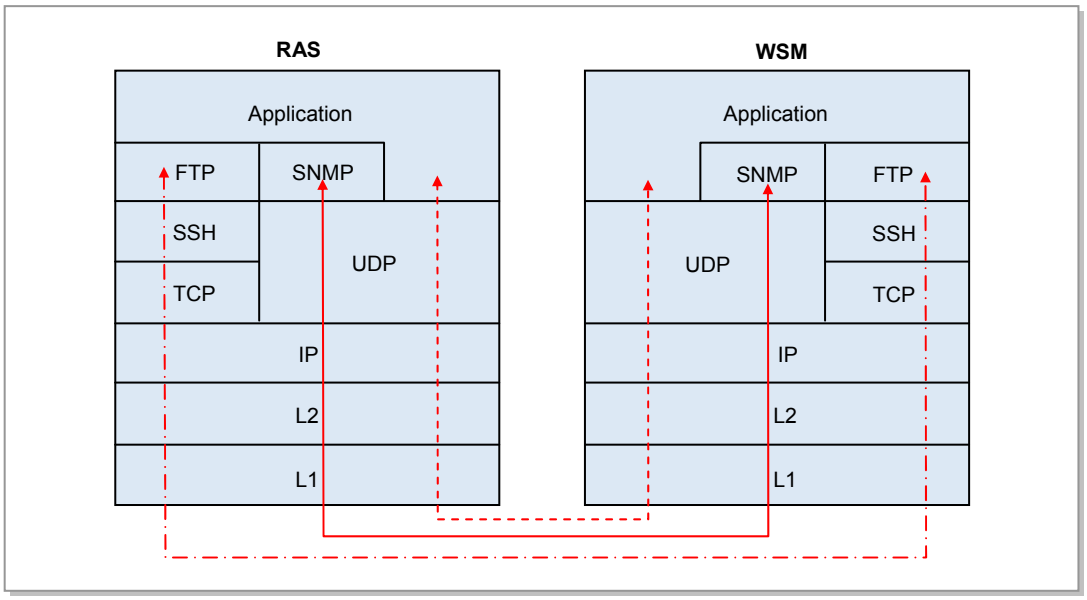

Figure 2.7 Protocol Stack between SPI-2213 and WSM

The ACR interworks with WSM in IP/UDP-based SNMP method to carry out the operation and maintenance functions. In particular, the SPI-2213 interworks with WSM in IP/TCP-based FTP/SFTP (FTP over SSH) method to collect the statistical data periodically, initialize & restart the system and download software.

2.6.3 Physical Interface Operation Method

The SPI-2213 provides Ethernet interface as an ASN interface and can select the type of interfaces depending on the network configuration. At this time, more than one type of interfaces cannot be operated simultaneously. The number of interfaces can be optionally managed depending on the capacity and the required bandwidth of the SPI-2213.
The types of interfaces are as follows:

Interface Type		Number of Ports per Board	Number of Ports per System
Ethernet	100/1000Base-T (RJ-45)	4	4
	1000BaseX (SFP)	2	2
	100/1000Base-T (RJ-45) (Simultaneous operation)	2	2

Ethernet interface operate several links as 802.3ad (static)-based static link aggregation.

The operation and maintenance interface (interface with WSM) is operated in in-band method, which shares the common user traffic interface.

© SAMSUNG Electronics Co., Ltd.

CHAPTER 3. SPI-2213 Architecture

3.1 System Configuration

3.1.1 DU and RRH

The SPI-2213 has a separate structure consisting of a DU and RRHs.
Because up to three RRHs can be connected to a DU, the maximum 2Carrier/3Sector service is possible.

DU

The DU is composed of a Digital Main Block (DMB), DPM-FI, and FAN-FD48.

- DMB
  The DMB operates and maintains the SPI-2213, enables the SPI-2213 to interface with ACR and provides the communication path between processors in the system.
  The DMB creates the reference clock, provides the clock to the lower hardware block and performs the signal processing function for the subscriber signal.
  The DMB also interfaces with the RRH to send and receive data traffic, and receives and controls alarms for the lower hardware blocks or modules, including the RRH.
- DPM-FI
  The DPM-FI receives DC power through a separate rectifier and distributes it to every board and module on the DU shelf. The operator can control DC power supply by turning the circuit breaker at the front of the DPM-FI on/off.
- FAN-FD48
  The FAN-FD48 is composed of a set of four fans and maintains the inside temperature of the DU within an appropriate range so that the SPI-2213 can operate normally.
  The FAN-FD48 detects the inside temperature of the DU using a built-in temperature sensor and sets the speed of the fan in accordance with the detected temperature.

© SAMSUNG Electronics Co., Ltd.

RRH

The RRH is a unified RF module interfacing remotely with the DU through an optical cable. It is located at the front end of the antenna.
On a downlink, it converts the data traffic in the form of ‘Digital I/Q and C & M’ received from the MRA-F of the DU into RF signals, which have up to 8W/carrier/sector output, and then sends them through an external antenna.
Conversely, on an uplink, the RRH converts the RF signals received through the antenna into ‘Digital I/Q and C & M’ data traffic, and then sends them to the MRA-F of the DU.
The RRH also receives clock information from the DU through the ‘Digital I/Q and C & M’ interface, and sends/receives alarm/control messages.

© SAMSUNG Electronics Co., Ltd.

3.1.2 Internal Configuration of the System

Below are the internal configuration diagrams of the SPI-2213 (2Carrier/3Sector).
Below are the internal configuration diagrams for the SPI-2213 according to the supported configurations and RRH types.

> **NOTE**
>
> **RRH Types**
>
> Refer to 3.2.2 for details on the RRH types.

2Carrier/3Sector MIMO

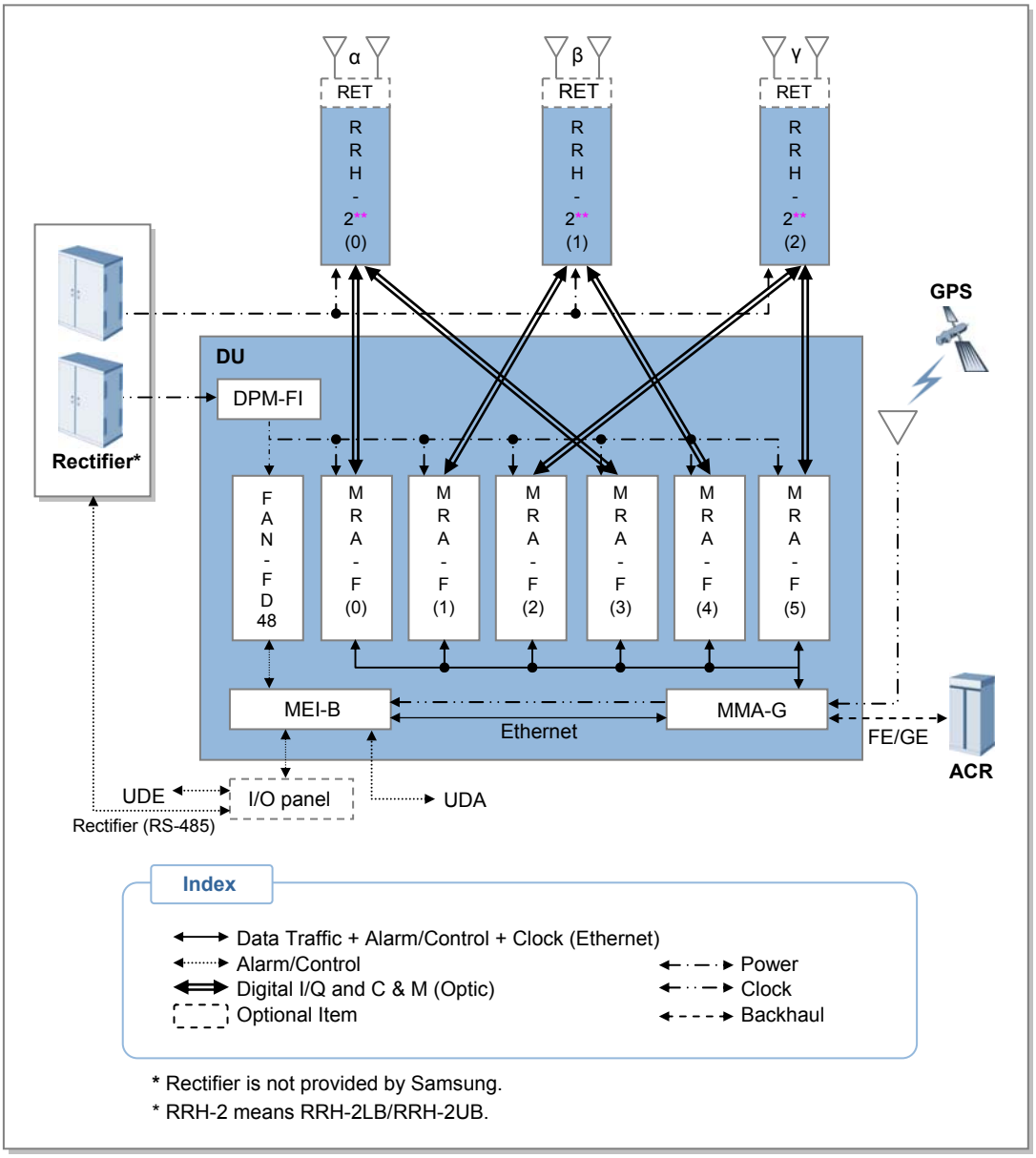

Figure 3.1 Internal Configuration of the System (MIMO)

2Carrier/3Sector 4T4R with CDD

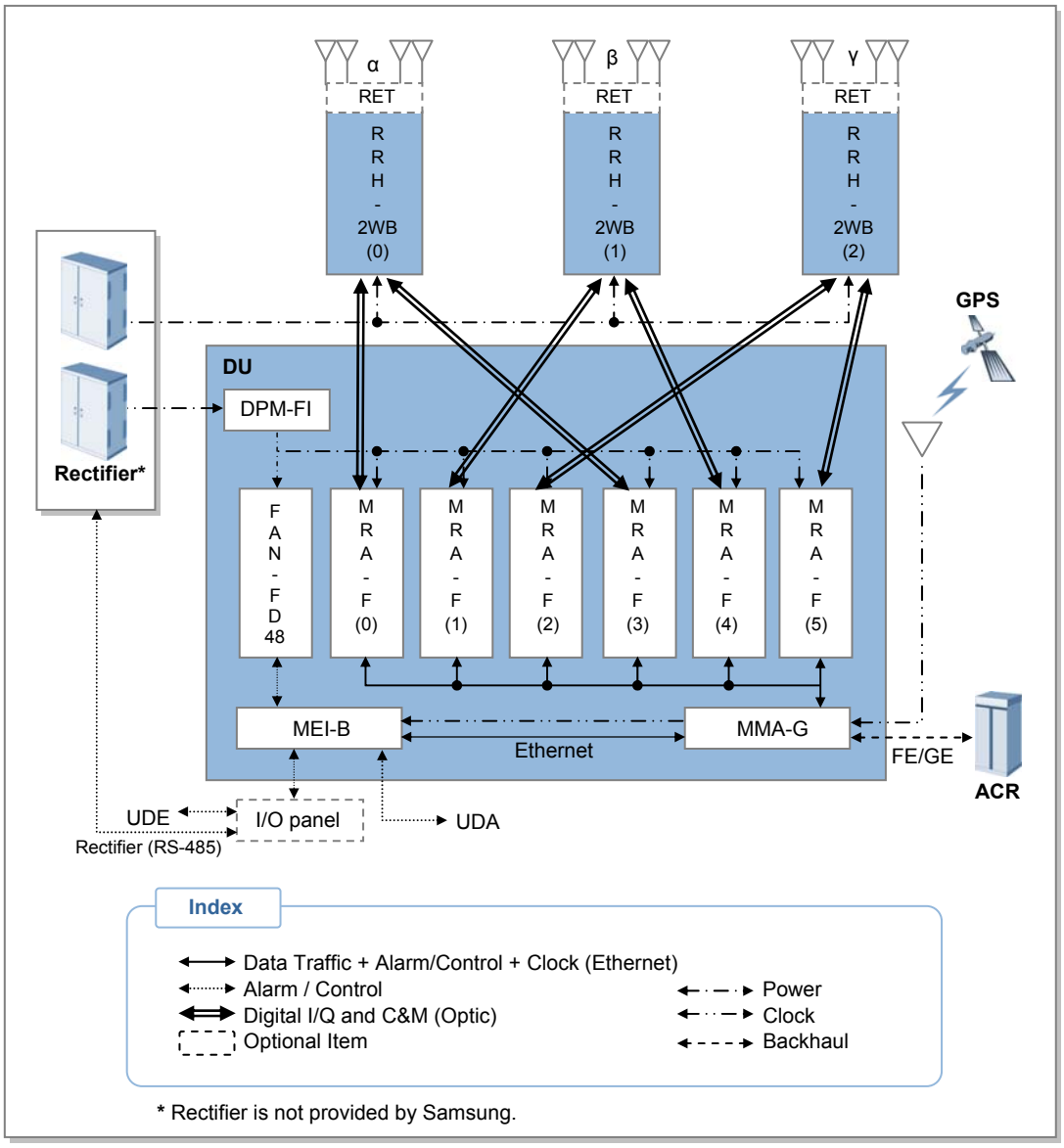

Figure 3.2 Internal Configuration of the System (4T4R with CDD)

NOTE

Rectifier

The vendor must install the rectifier separately. Samsung can provide a commercial rectifier at the vendor's request.

For the RS-485 interface service between the SPI-2213 and rectifier, the rectifier must meet the interface protocol specified by Samsung. For other operations, the SPI-2213 can communicate with the rectifier using User Defined Alarms (UDA).

© SAMSUNG Electronics Co., Ltd.

3.2 Detailed Structure

3.2.1 Digital Main Block (DMB)

The DMB supports the operation and maintenance of the SPI-2213, interfacing between the SPI-2213 and ACR, and interfacing between the DU and RRH. It also collects and controls alarms for the lower boards and modules, including the inter-processor communication paths and RRH in the system. The DMB also generates and supplies clocks to the lower hardware blocks, including the RRH, and processes channels for subscriber signals.

When the SPI-2213 sends signals to an MS, the DMB performs the OFDMA signal processing on the traffic signals received from the ACR, converts them into optical signals using the 'Digital I/Q and C & M' converter, and then sends them to the remote RRH. Conversely, when the SPI-2213 receives signals from an MS, the DMB receives 'Digital I/Q and C & M' signals from the remote RRH, performs the OFDMA signal processing on them, and then sends them to the ACR.

Main Functions

- Creation and distribution of the reference clock
- Fast Ethernet/Gigabit Ethernet interface with ACR
- Fault diagnosis and alarm collection and control
- Alarm report
- Channel resource management
- OFDMA signal processing
- Automatic Gain Control (AGC) for the received RF signal and Received Signal Strength Indicator (RSSI) support
- Supporting optical interfacing with the RRH and loopback test

The DMB is configured as shown in the figure below:

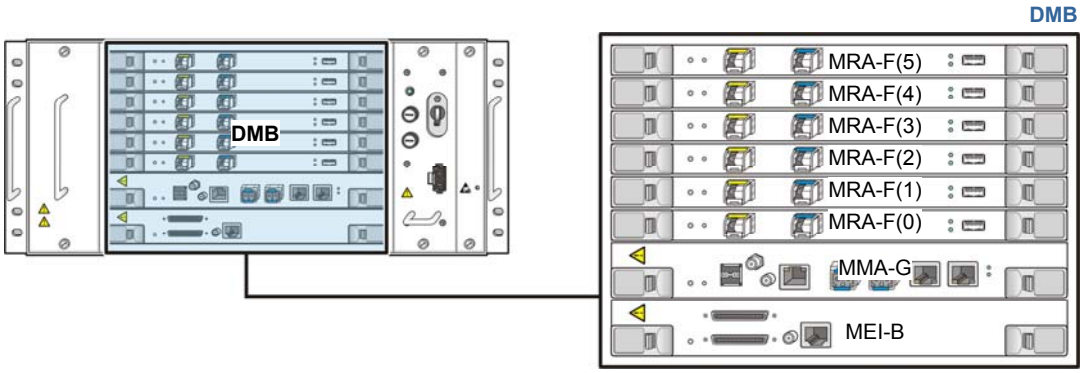

Figure 3.3 DMB Configuration

Board Name	Quantity (Sheet)	Function
MBB-F	1	Mobile WiMAX base station Backplane Board-Flexible - DMB backboard - Signal routing function for traffic, control signal, clock, power, etc.
MMA-G	1	Mobile WiMAX base station Main control board Assembly-General - Main system processor - Call processing, resource allocation and OAM - Reception of the GPS signal and creation and supply of the clock - Alarm collection and report to the upper - Supports FE/GE interface with ACR - Non-volatile memory support
MRA-F	Max. 6	Mobile WiMAX base station RAS board Assembly-Flexible - Subscriber data traffic processing - OFDMA Processing - 1Carrier/1Sector MIMO or 4T4R with CDD - 'Digital I/Q and C & M' data formatting - Supporting optical interfacing with the RRH (E/O, O/E conversion) - Supporting loopback tests between the DU and the RRH
MEI-B	1	Mobile WiMAX base station External Interface board assembly-Basic - Provides User Defined Alarm (UDA) - Alarm monitoring including fan alarm/high temperature

© SAMSUNG Electronics Co., Ltd.

Mobile WiMAX base station Main control board Assembly-General (MMA-G)

The MMA-G provides a main processor function of the SPI-2213, GPS signal receiving and clock distribution, and network interface functions.

- Main Processor Function
  The MMA-G is the board that carries out the role as the highest layer in the SPI-2213 and is equipped with the main processor. The main processor of the MMA-G performs the functions, such as communication path setting between MS and ACR, Ethernet switch function in the SPI-2213, system operation and maintenance and TDD signal control.
  The MMA-G manages the status of all hardware and software in the SPI-2213 and reports each status information to WSM via ACR. In addition, the MMA-G allocates and manages the resources of the SPI-2213 and the connection of the MMA-G and a PC for the Web-EMT enables to maintain the SPI-2213 with no interworking with ACR.
- GPS Signal Reception and Clock Distribution Function
  The MMA-G is equipped with Universal Core Clock Module (UCCM) for GPS signal reception.
  The UCCM enables each block of the SPI-2213 to be operated in the synchronized clock system. The UCCM mounted on the MMA-G creates the system clocks [56 MHz, 12.5 Hz (80 msec), PP2S, analog 10 MHz, 61.44 MHz] by using the reference signal received from a GPS and distributes them to the hardware blocks in the system. These clocks are used to maintain the internal synchronization of the SPI-2213 and operate the system.
  If no GPS signal is received due to a fault when system operation, the UCCM carries out the holdover function to provide the normal clock for a certain time as provided in the existing system.
- Network Interface Function
  The MMA-G interfaces with an ACR in Gigabit Ethernet or Fast Ethernet method.
  The MMA-G can provide maximum two Gigabit Ethernet ports or four Fast Ethernet ports per board, and support the link aggregation redundancy method.
  The MMA-G can be divided as follows depending on the interface types provided by MMA-G, and service provider can choose the interface type.
  - MMA-GC: Four 100/1000Base-T Copper ports
  - MMA-GM: Two 100/1000Base-T ports and two 1000Base-X Small Form factor Pluggable (SFP) ports

Mobile WiMAX base station RAS board Assembly-Flexible (MRA-F)

The MRA-F provides a modem function of the SPI-2213 and interfacing with the RRH.

- Modem Function
  The MRA-F is equipped with the modem supporting IEEE 802.16 Mobile WiMAX standard physical layer (PHY) and the modem performs the OFDMA signal processing function by the control of the MMA-G.
  The MRA-F modulates the packet data received through the MMA-G, converts the modulated signal into the 'Digital I/Q and C & M' format and transmits to the RRH.
  In the contrary, the MRA-F demodulated the data received from the RRH after performing the AGC function, converts the data into the format defined in the IEEE 802.16 Mobile WiMAX physical layer standard and then transmits the converted data to the MMA-G via Ethernet.
  By default, the MRA-F supports MIMO or 4T4R with CDD mode depending on the RRH type connected.
  - RRH-2LB/RRH-2UB : 2x2 MIMO
  - RRH:-2WB : 4T4R with CDD (Matrix A/B + CDD mode)
- Optical interfacing with the RRH and Loopback Test
  As the MRA-F contains a built-in Electrical to Optic (E/O) conversion device and an Optic to Electrical (O/E) conversion device, it can send and receive 'Digital I/Q and C & M' signals of the optical signals between distant RRHs.
  The MRA-F can also run loopback tests to check whether the interface between the MRA-F and RRHs is in good condition for proper communication.
  The operator can run the loopback test if necessary using the WSM command.

Mobile WiMAX base station External Interface board assembly-Basic (MEI-B)

The MEI-B provides paths for alarm information that is generated from external devices (additional equipment provided by the operator).
The MEI-B also collects alarms for the fan mounted on the DU to report to the MMA-G.

© SAMSUNG Electronics Co., Ltd.

3.2.2 RRH

The RRH is a remote RF device that supports Mobile WiMAX services.
It is installed at a remote location from the DU. It performs the function that connects mobile WiMAX calls to an MS, as defined in the 802.16d/e standard.

Main Functions

Below are the major functions of the RRH.

- High-power amplification of RF transmission signal
- Interfaces optically with the MRA-F of the DU using 'Digital I/Q and C & M' and carries out interfacing for traffic, alarms, control signals, and clock information.
- Upconversion/downconversion of frequency
- Gain control of RF Rx/Tx signal
- Rx/Tx RF signal from/to an antenna
- Suppression of out-of-band spurious wave emitted from RF Rx/Tx signal
- Low noise amplification of band-pass filtered RF Rx signal (Low Noise Amplifier, LNA)
- TDD switching function for Tx/Rx path
- Includes the filter part connected to the antenna
- Remote Electrical Tilting (RET) function(option)

NOTE

RET

The RET is an optional function that the vendor can select. Refer to 5.1.

RRH Description

The RRH is a RF module of the SPI-2213, and supports sending/receiving RF paths.
RRH of this system is as follows:

Category	EA	Capacity	RF Path	Antenna Output
RRH-2LB/ RRH-2UB	Max. 3	2Carrier/1Sector (Contiguous 2Carriers)	MIMO (2Tx/2Rx)	Outputs 4W/Sector/Carrier at 2 antenna ports each
RRH-2WB	Max. 3	2Carrier/1Sector (Contiguous 2 Carrier)	4T4R with CDD (4Tx/4Rx)	Outputs 5 W/Sector/Carrier at 4 antenna ports each

The RRH is an RRH that integrates the RAS transceiver, power amplifier, TDD switch, and filters in a single module.

In the case of downlink signals, the RRH converts baseband signals received through the 'Digital I/Q and C & M' interface from the MRA-F into Optic to Electrical (O/E).
The converted signals undergo Digital to Analog Conversion (DAC) to be converted to analog RF signals, and then are amplified through the current amplification process. Amplified signals are sent to the antenna via the filter part.

In the case of uplink signals, the frequency of the signals received through the RRH filter part is lowered by Low Noise Amplifier (LNA). The Analog to Digital Conversion (ADC) process converts these signals to baseband signals. The baseband signals are in the 'Digital I/Q and C & M' format, and undergo E/O conversion to be sent to the MRA-F.

Network Configuration Using the RRH

The RRH cannot operate on its own, but operates by being linked to the DU. The RRH is highly flexible in its installation, and helps with setting up a network in a variety of configurations depending on the location and operation method as shown below.

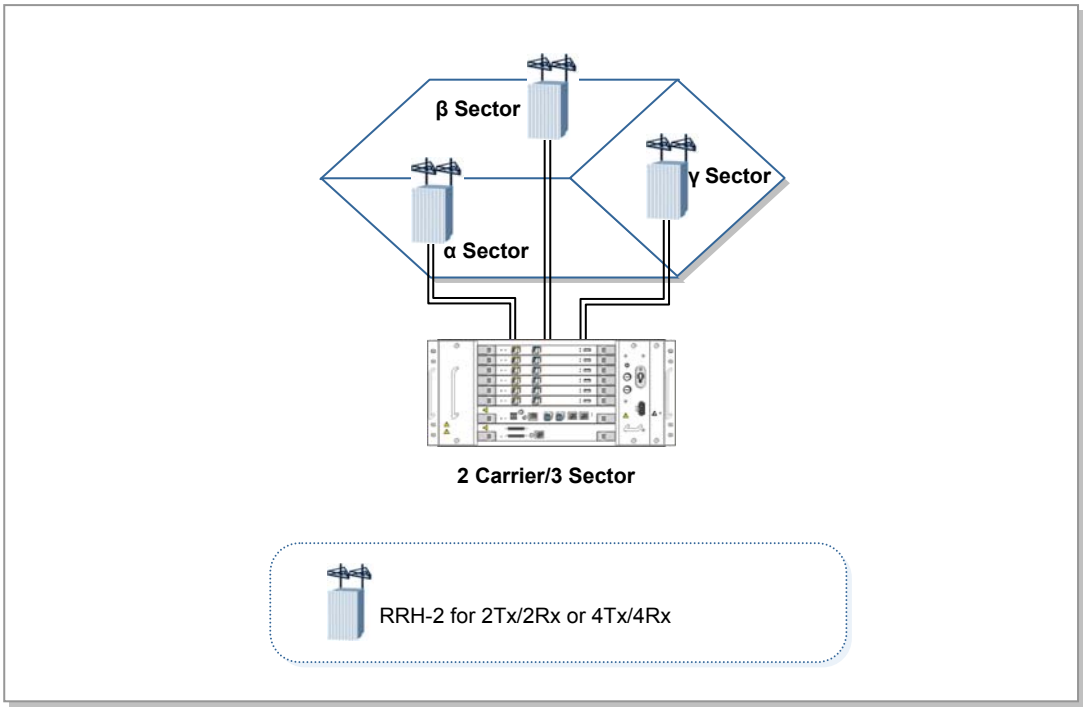

Figure 3.4 Sector Configuration Example Using RRH-2

NOTE

Conditions for Sector Configuration Using RRH-2

2carrier supported by the RRH-2 must be a contiguous type.

© SAMSUNG Electronics Co., Ltd.

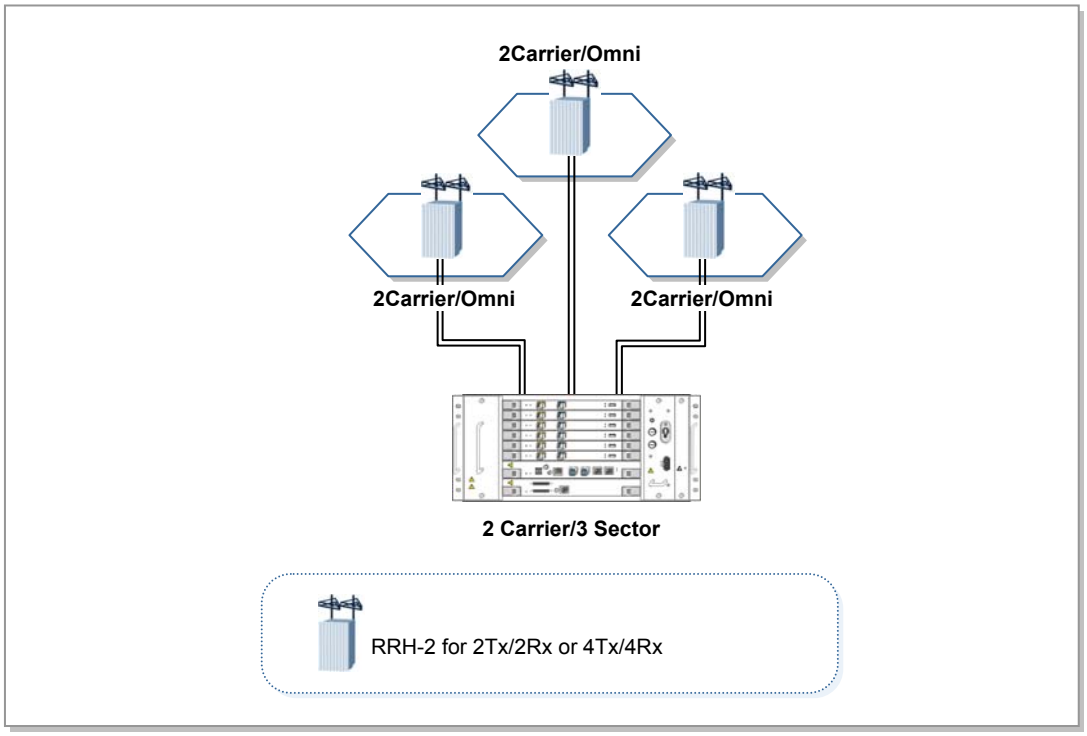

Figure 3.5 Omni Configuration Example Using RRH-2

NOTE

Conditions for Omni Configuration Using RRH-2

- Multiple cells connected to a single DU must belong to a single paging group.
- Omni cells must be independent, and not be adjacent to each other.
- 2carrier supported by the RRH-2must be a contiguous type.

3.2.3 DPM-FI

The DPM-FI is mounted to the right of the SPI-2213 DMB.

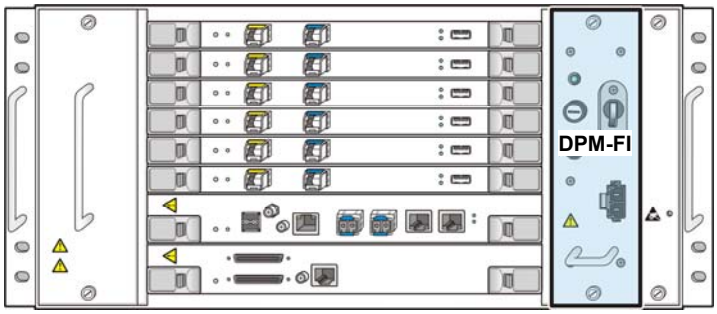

Figure 3.6 DPM-FI Configuration

Board Name	Quantity	Function
DPM-FI	1	DC Power Module-Flexible Indoor Receives DC power through a rectifier and distributes it to every block in the DMB

Every board of the DMB and the fan (FAN-FD48) of the DU in the SPI-2213 receive power through the MBB-F.
Each board of DMB receives -48 VDC and converts it to the required voltage.

© SAMSUNG Electronics Co., Ltd.

The following power diagram shows DU input power that is supplied to DPM-FI and connection points to each board.

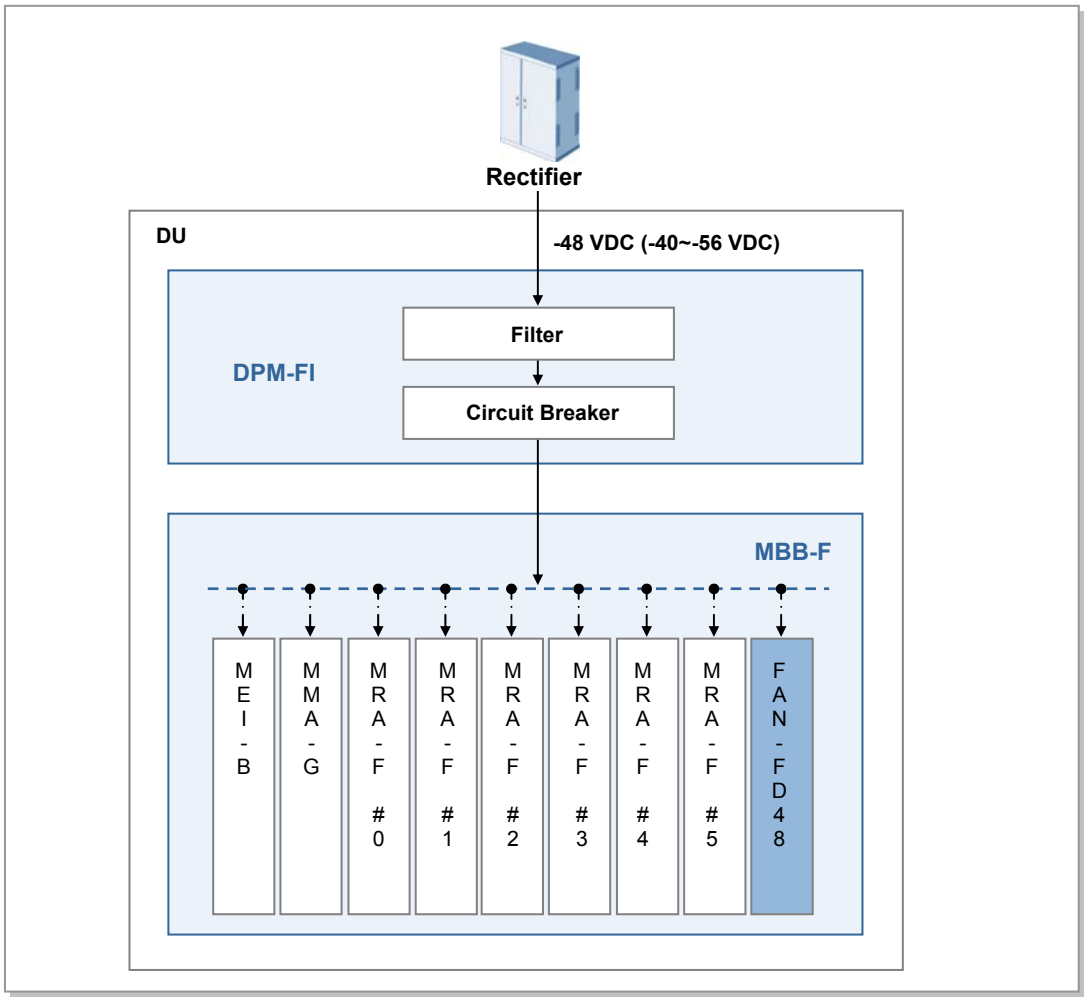

Figure 3.7 Power Structure of SPI-2213

NOTE

RRH Power Supply

If the RRH is distant from the DU, it is supplied with separate power (e.g., rectifier) of -48 VDC (-40~-56 VDC).

3.2.4 Cooling Structure

DU

The DU of the SPI-2213 maintains the inside temperature of the shelf at an appropriate range using a set of system cooling fans (FAN-FD48), so that the system can operate normally when the outside temperature of the DU shelf changes.

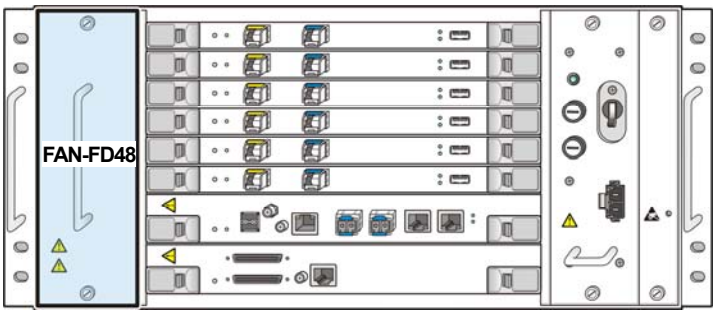

Figure 3.8 Fan Configuration

Board Name	Quantity	Function
FAN-FD48	1	FAN Module-Flexible Digital unit -48 VDC DU cooling fan

The cooling structure of the DU in the SPI-2213 is as follows.

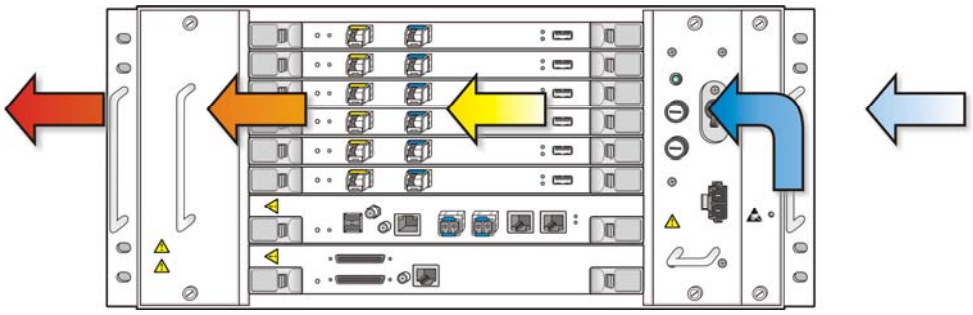

Figure 3.9 Cooling Structure of the DU

The FAN-FD48 has a built-in temperature sensor.

RRH

The RRH of the SPI-2213 is designed with a natural cooling system that supports an outdoor environment with no additional fan or heater.

© SAMSUNG Electronics Co., Ltd.

3.2.5 Interface Structure

The layout of SPI-2213 interfaces is as shown in the figure below:

MIMO Support

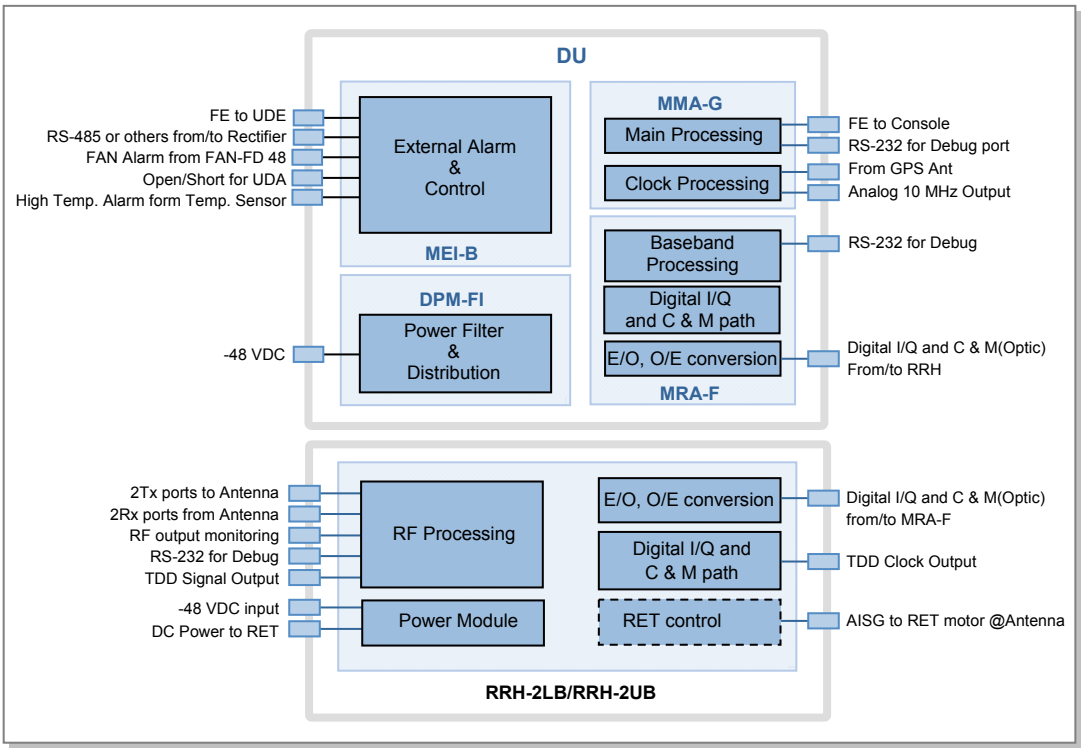

Figure 3.10 Interfaces of SPI-2213 (MIMO)

The SPI-2213 supports MIMO and provides the administrator with the following external interface.

- External Interface of DU

Category	Interface Type	Port No.	Connector Type
Backhaul	Simultaneous operation of 1000Base-X and 100/1000Base-TX	2	1000 Base-X: SFP (LC)
		2	100/1000 Base-Tx: RJ-45
	100/1000 Base-TX	4	RJ-45
GPS Antenna	Analog RF	1	SMA
Rectifier Interface	RS-485 or others	1	RJ-45
RRH interface	Digital I/Q and C & M	Max. 6	SFP (Single mode)

- External Interface of RRH-2

Category	Interface Type	Port No.	Connector Type
TX coupling port	Analog RF	2	SMA
Antenna Interface	Analog RF (Main Traffic)	2	N-type
DU interface	Digital I/Q and C & M	1	Optic (LC)
Power	DC power (-48 VDC)	1	Circular Connector

4T4R with CDD Support

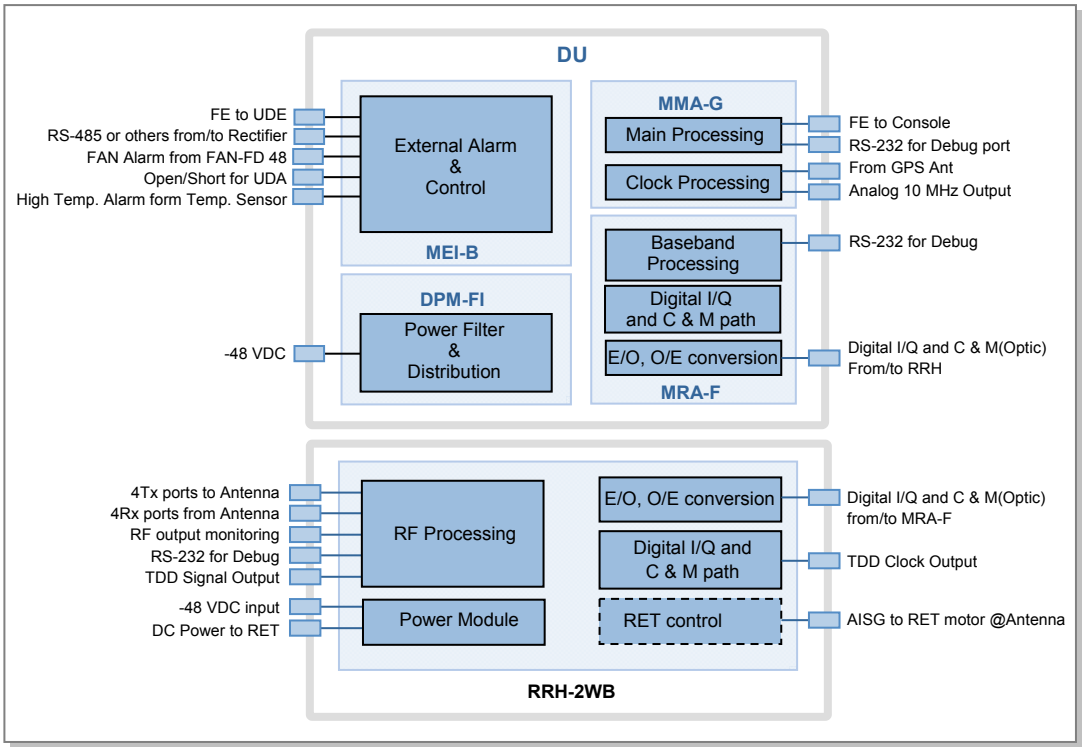

Figure 3.11 Interfaces of SPI-2213 (4T4R with CDD)

© SAMSUNG Electronics Co., Ltd.

The SPI-2213 supports 4T4R with CDD and provides the administrator with the following external interface.

- External Interface of DU

Category	Interface Type	Port No.	Connector Type
Backhaul	Simultaneous operation of 1000Base-X and 100/1000Base-TX	2	1000 Base-X: SFP (LC)
		2	100/1000 Base-Tx: RJ-45
	100/1000 Base-TX	4	RJ-45
GPS Antenna	Analog RF	1	SMA
Rectifier Interface	RS-485 or others	1	RJ-45
RRH interface	Digital I/Q and C & M	Max. 12	SFP (Single mode)

- External Interface of RRH-2WB

Category	Interface Type	Port No.	Connector Type
TX coupling port	Analog RF	4	SMA
Antenna Interface	Analog RF (Main Traffic)	4	Mini-Din
DU interface	Digital I/Q and C & M	1	SFP (single mode)
Power	DC power (-48 VDC)	1	Square Flange Receptacle

3.3 Software Structure

3.3.1 Basic Structure

The components of the SPI-2213 software are shown below: Operating System (OS), Device Driver (DD), Middleware (MW), Network Processor Software (NPS), IP Routing Software (IPRS), and application. The application is divided by Call Control (CC) block for the call processing and the OAM block for operation and maintenance of the SPI-2213.

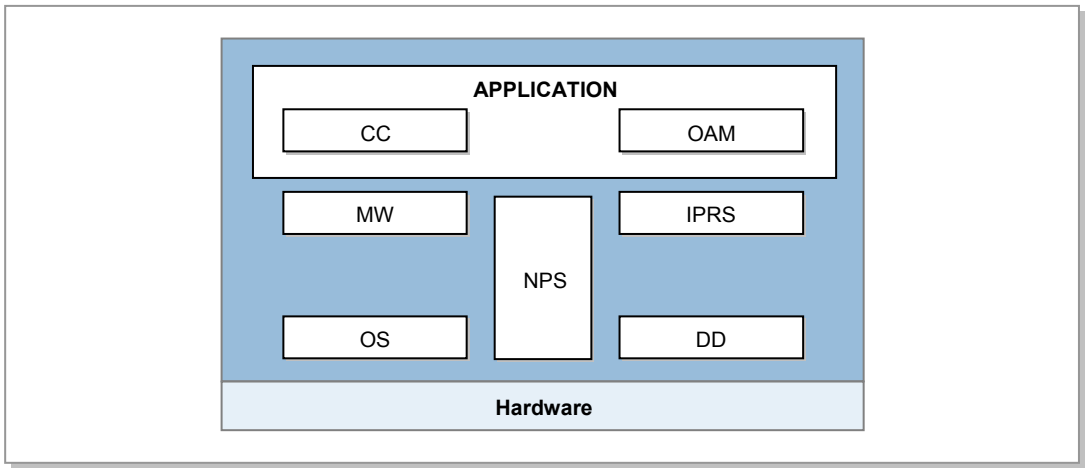

Figure 3.12 Software Structure of SPI-2213

Operating System (OS)

OS initializes and controls the hardware device, and runs the software operation in the hardware. To operate the software, OS uses the embedded Linux OS, and manages the dual software processes. Then, OS provides various functions efficiently with limited resources.

Middleware (MW)

MW helps the smooth operation between OS and application under various types of hardware environment, and to achieve this, MW provides various services: message delivery service between applications, event notification service, debugging utility services. In addition, the MW provides the systematic and strong management of the account, the authority and the authentication function.

Device Driver (DD)

DD manages the normal operation of applications that OS does not control in the system. DD provides the API for the user processor to setup/control/detect the hardware device. Also, DD confirms the device configuration by receiving the configuration data from the upper user processor, and also provides the functions of register manipulation for device operation, device diagnosis, statistics and status management.

© SAMSUNG Electronics Co., Ltd.

Network Processor Software (NPS)

NPS manages the innate functions of Network Processor (NP) that mainly processes the packets, and it connects the upper processor and NP in Board Processor (BP), and provides the functions of NP message processing, NP statistics data collection and report.

IP Routing Software (IPRS)

IPRS executes the IP routing protocol function. IPRS collects and manages the system configuration and status data necessary for IP routing operation, and based on the data, it generates the routing table via the routing protocol, and makes packet forwarding possible.

Call Control (CC)

CC is a software subsystem that processes the calls in the SPI-2213, and CC interfaces with MS and ACR. CC supports data exchange function to support wireless data service such as the MAC scheduling, air link control, ARQ processing and IEEE 802.16 message processing.

Operation And Maintenance (OAM)

The OAM provides the interface (SNMPv2c/SNMPv3, FTP/SFTP, HTTPs, SSH) of which the security is strengthened, and which is standardized to interwork with the upper management system such as the WSM, the Web-EMT and console terminal based on the IMISH.

In addition, this performs the functions of initializing and restarting the system, collecting the statistics for processing the call and various performance data, managing the system configuration and resources, managing the status of the software resources and the hardware resources, managing the failure and performing the diagnostics for the operation and the management of the SPI-2213.

© SAMSUNG Electronics Co., Ltd.

3.3.2 Call Control (CC) Block

The CC block caries out the resource management function of the SPI-2213 and the BS function of ASN Profile-C defined in NWG of Mobile WiMAX forum. The CC block consists of RAS Resource Controller (RRC), RAS Service Controller (RSC) and RAS Traffic Controller (RTC) sub-blocks and the functions of each sub-block are as follow:

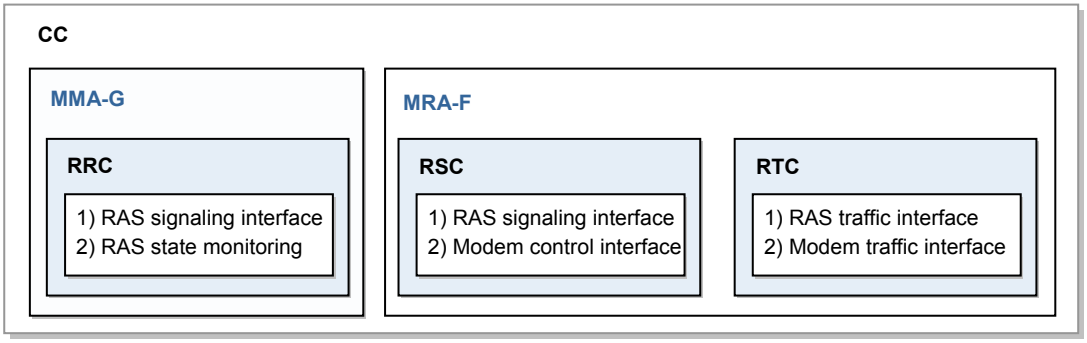

Figure 3.13 CC Block Structure

RRC as the resource manager of the SPI-2213 exchanges the status information with all blocks and assigns appropriate software resources to a service when it receives the necessary service request from RAS/ACR.

RSC processes the MAC signaling via R1 interface and interworks with ACR via R6 interface. RSC performs the Call Admission Control (CAC) in the service creation process and requests the traffic channel setup to RTC. In addition, RSC transfers the information on the internal control message to the modem block in the SPI-2213.

RTC fragments the user data received from ACR via the R6 interface in MAC PDU format and transfers the data to the modem block or re-assembles the MAC PDU received from an MS via the R1 interface and transmits to ACR. In addition, the RTC interworks with the RSC block controlling the RAS signal and performs the call setup/release procedure.

3.3.2.1 RAS Resource Controller (RRC)

RRC is in charge of the resource management of the SPI-2213 and is activated on the MMA-G. The RRC interfaces with ACR outside the system and the RSC and OAM blocks inside the system.

Main functions of RRC are as follows:

- ACR Keep Alive
- RSC Keep Alive
- Inter Carrier Load Balancing
- Paging Message Transmission
- System Resource Management

© SAMSUNG Electronics Co., Ltd.

3.3.2.2 RAS Service Controller (RSC)

The RSC is in charge of the signaling-concentrated service in the SPI-2213. As for the system outside, the RSC performs the message exchange with ACR via the Mobile WiMAX standard R6 interface. As for the system inside, RSC interworks with the RTC that is in charge of traffic data and transmits the information on the internal control message to the modem block.
The RSC performs the MAC message exchange described in IEEE 802.16 with an MS and carries out the call setup procedure by interworking with the RRC via the system internal message. The RSC is activated on MRA.

Main functions of RSC are as follows:

- CID Creation and Release
- MAC Management Message Processing
- R6 Interface Message Processing
- Handover processing
- Sleep Mode Support for Power Reduction
- Collection of Various Statistics
- Paging Relay Function for MS

3.3.2.3 RAS Traffic Controller (RTC)

The RTC is the block to process the traffic of the SPI-2213. The RTC is the block pertaining to the bearer plane and is located as the kernel module format of the corresponding CPU. The RTC performs the R6 interface under IEEE 802.16 standard and enables to the modem block to perform the R1 interface normally.

The RTC fragments the user data received from ACR via the R6 interface in MAC PDU format and transfers the data to the modem block or re-assembles the MAC PDU received from an MS via the R1 interface and transmits to ACR.

In addition, the RTC interworks with the RTC block controlling the RAS signal and performs the call setup/release procedure. This process is carried out via the memory interface in the RAS card (MRA-F). The RTC communicates with the modem block via the PCI interface.

The RTC is activated on MRA and its main functions are as follows:

- ARQ function: Receives the ARQ feedback message from an MS and processes the message.
- Analyzes and processes the RSC control message and performs the queue management.
- Performs the traffic interface with the modem block.
- Performs the scheduling function for each QoS class

- Data Traffic Processing Function
  RTC provides the data path between ACR and the SPI-2213 via the R6 data path (GRE tunnel).
- Traffic Control Function for Handover
  In handover, RTC performs the data synchronization function between serving RAS/ACR and target RAS/ACR.

3.3.3 Operation And Maintenance (OAM) Block

OAM block manages the operation and maintenance of the SPI-2213, and it is divided as the three shown below: EMS Interface (EMI), Main OAM and Board OAM.

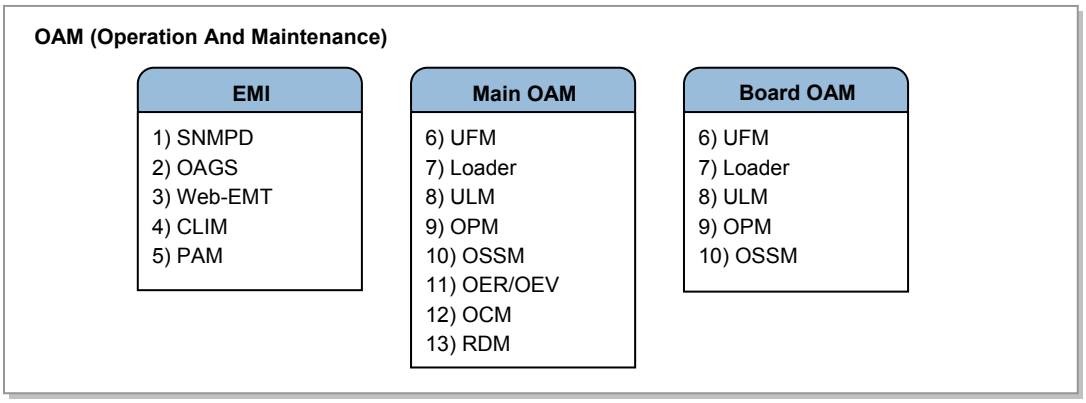

Figure 3.14 OAM Software Structure

The following interface structure diagram shows the communication between OAM blocks. Main OAM and EMI are running on the MMA-G that support master OAM.
Board OAM is running on the remaining lower processor board.

© SAMSUNG Electronics Co., Ltd.

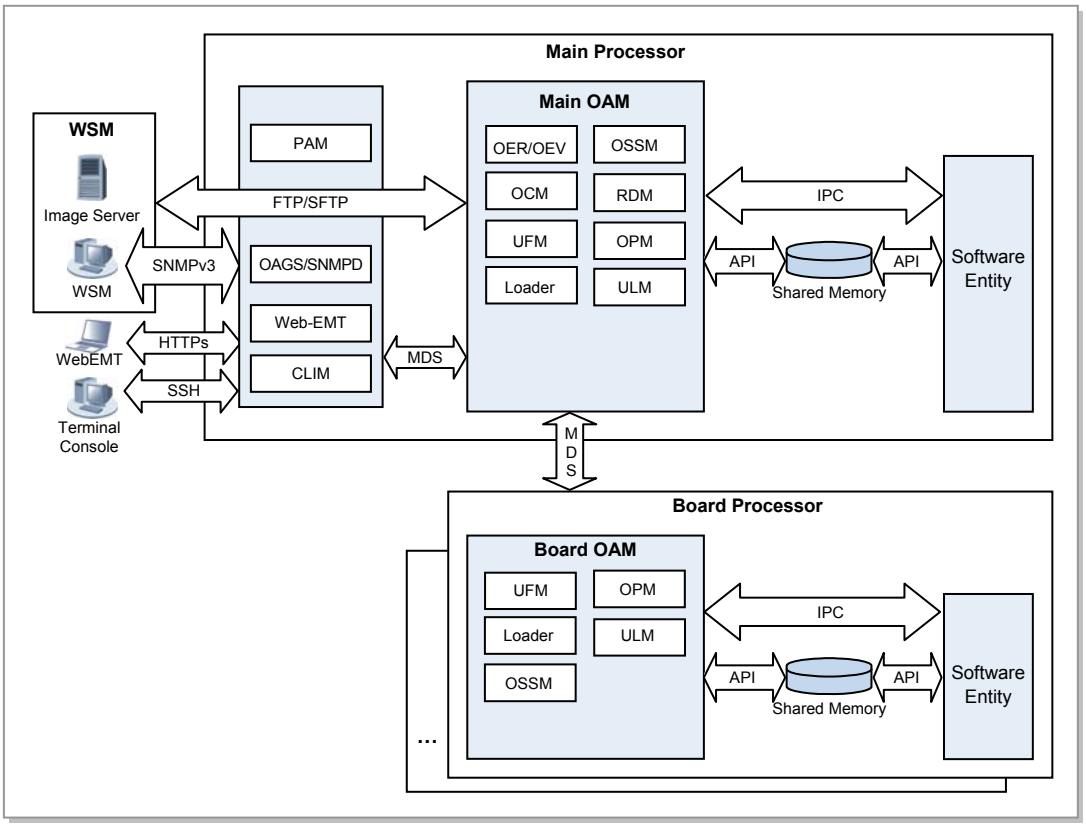

Figure 3.15 Interface between OAM Blocks

The EMI carries out SNMP agent and web server function, and provides the OAM interface between the management system (WSM, Web-EMT and CLI Terminal) and the SPI-2213 by providing the IMISH. Then, to access the SPI-2213 directly via the Web-EMT or the console terminal, the process of the operator authentication and the authority allowance via the WebEMT or Pluggable Authentication Module (PAM) block should be done.

The Main OAM is located in the main processor. The Main OAM communicates with the upper management system by interworking with the EMI block and distributes the Programmable Loading Data (PLD) to the lower processors by managing the system configuration as the format of the PLD. In addition, the Main OAM performs the role of the Image Server (IS) and the Registration Server (RS), collects and saves the statistics data and the failure information, and reports them to the upper management system.

The Board OAM is located in the lower processor. The Board OAM collects the failure and the statistics data of each board, reports them to the Main OAM and monitors the software process of each board.

Functional details of each block are as follows.

3.3.3.1 SNMP Daemon (SNMPD)

SNMPD plays the SNMP agent role to support the standard SNMP (SNMPv2c/SNMPv3) and an interface role for the upper management system (WSM) and interworks with internal subagent. While receiving requests on the standard MIB object from WSM are processed by SNMPD itself, it transmits requests on the private MIB object to subagent in order to be handled properly.

SNMPD Main Functions

- Standard MIB processing
  If the request for the MIB-II object is received, the SNMPD processes it directly and transmits the response.
- Private MIB processing
  If the request for the Private MIB object is received, it is not processed directly by the SNMPD, but it is transmitted to the corresponding internal subagent, and then the response is transmitted from the subagent and it is transmitted to the manager.

SNMPD Implementation

SNMPD is implemented on the MMA-G as shown below.

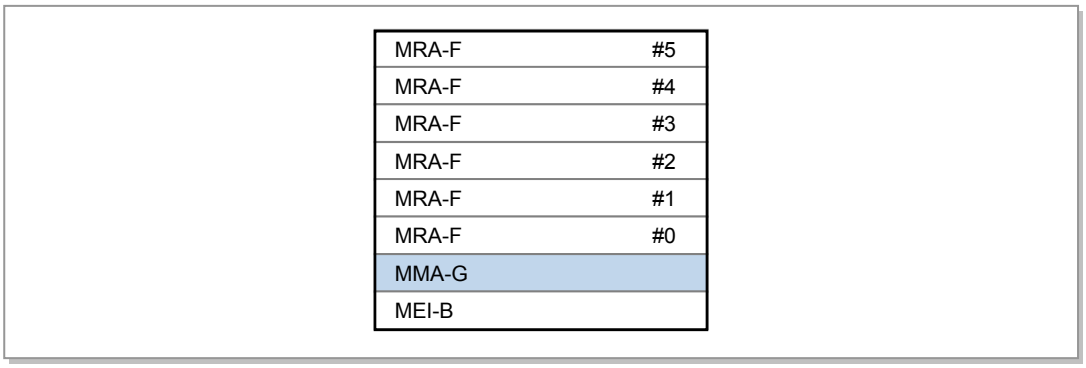

Figure 3.16 SNMPD Block

© SAMSUNG Electronics Co., Ltd.

3.3.3.2 Common SNMP Agent Subagent (OAGS)

OAGS plays the SNMP subagent role to support the standard SNMP (SNMPv2c/SNMPv3). Also, through master agent (SNMPD) OAGS plays an interface role for the upper management system for the command inquiry and change of ACR to be operated through the get/get-next/get-bulk/set/trap command defined by SNMP.

OAGS Main Functions

- Providing private MIB
  - Provide private MIB to the management system.
  - Generate the message data file necessary for the interface function between OAM blocks.
- SNMP command processing
  Process the command received from the management system and transmit the corresponding result via the SNMPD.
- Notification function
  Send the SNMP trap to master agent (SNMPD) whenever there are needs to inform the change or the alarm of the SPI-2213 data to the upper management system.

OAGS Implementation

OAGS is implemented on the MMA-G as shown below.

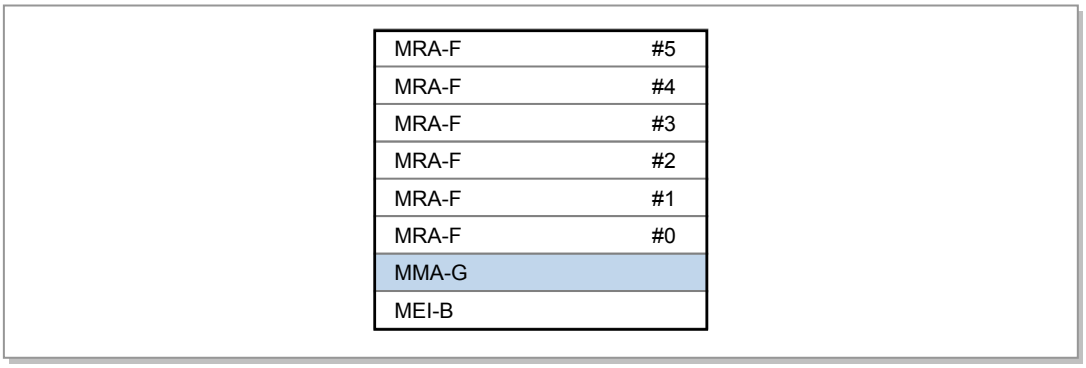

Figure 3.17 OAGS Block

3.3.3.3 Web-based Element Maintenance Terminal (WebEMT)

The WebEMT is the block to interface with the Web client of the console terminal which uses the Web browser, and performs the role of the Web server. Both Web-EMT and the SPI-2213 support the HTTP communications based on the Secure Sockets Layer (SSL).

WebEMT Main Functions

- Web server function
  - HTTP server for the management using Web-EMT
  - Receive html requests and display HTML pages
- OAM block interface
  - Process commands from Web-EMT interoperating with other OAM blocks
  - User management

WebEMT Implementation

WebEMT is implemented on the MMA-G.

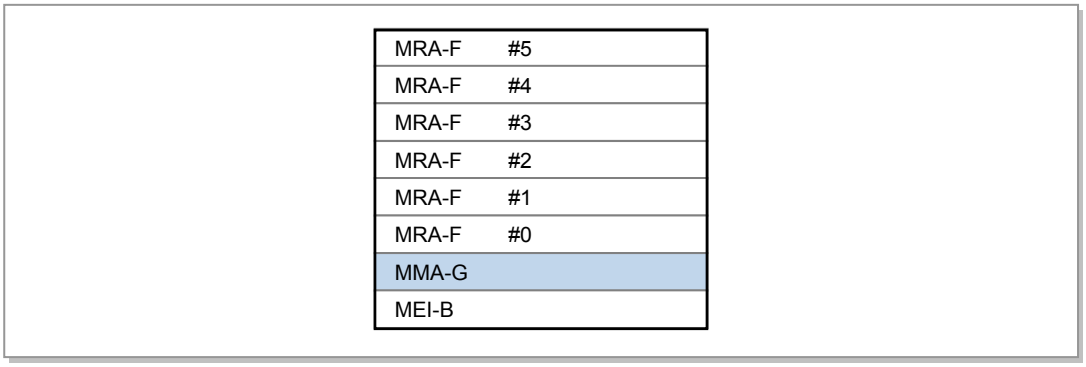

Figure 3.18 WebEMT Block

© SAMSUNG Electronics Co., Ltd.

3.3.3.4 Command Line Interface Management (CLIM)

The CLIM is the block to interface with the IMISH, when it is connected to the console terminal via the Secure Shell (SSH) method. The CLIM processes the received command via the IMISH and displays the corresponding result.

CLIM Main Functions

- IMISH command processing
  - Setup/change/inquiry of interface and routing functions
  - Setup/change/inquiry of the SPI-2213 operation & maintenance

CLIM Implementation

CLIM is implemented on the MMA-G as shown below.

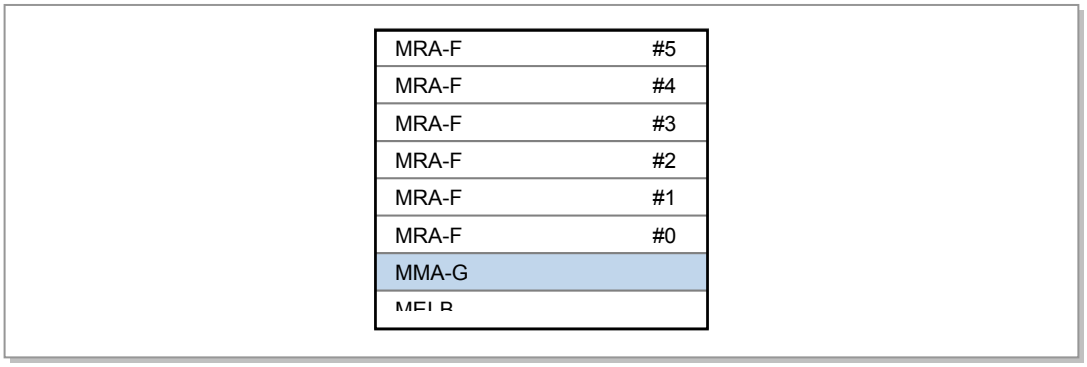

Figure 3.19 CLIM Block

3.3.3.5 Pluggable Authentication Module (PAM)

The PAM receives the account and the password of the operator who uses the console terminal (IMISH and Web-EMT) when logging in, thus it perform the operator authentication and the process of allowing the authority.

PAM Main Functions

- Operator's account management and authentication
  The function of managing and authenticating the account of the operator who uses the console terminal (IMISH and Web-EMT) is performed.
- Operator's authority management
  The function of allowing the authority for all the commands which the operator can perform is performed.
- Password management
  Management functions such as creating the operator's password, saving and updating the encryption are performed.

PAM Implementation

PAM is implemented on the MMA-G as shown below. MMA-G has 1:1 active/standby redundancy.

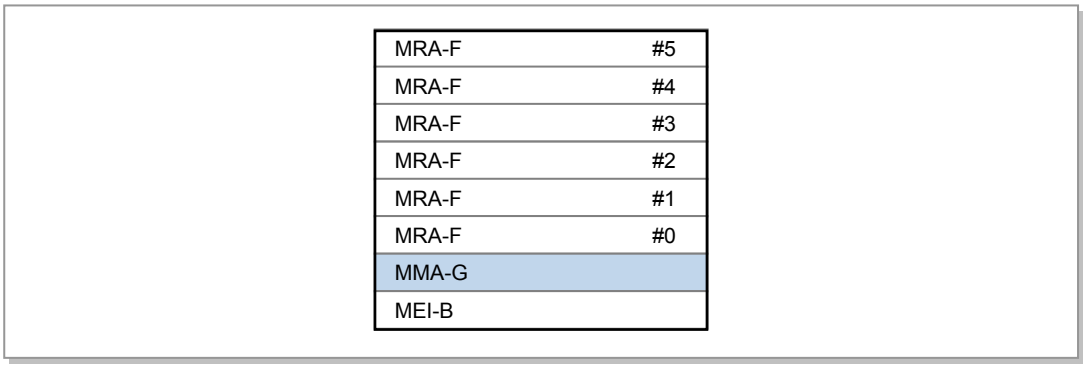

Figure 3.20 PAM Block

3.3.3.6 Universal Fault Management (UFM)

UFM manages the ACR faults and the status of software and hardware. UFM informs the detected failures to the upper management system by the filtering function, and applies the severity changes and the threshold to the fault management system. In particular, the UFM receives ToD from a Global Positioning System (GPS) signal receiver, distributes the received ToD to CC software for call processing, and manages faults concerned with the ToD.

The UFM supports statistics and status management of Ethernet switch devices.

UFM Main Functions

- Failure Management
  - Hardware and software failure management by interrupt and polling
  - When the failure is detected, it is reported to the management system and the related block.
- Status Management
  - Status management for the components
  - When the status information of the resource is changed, it is reported to the management system and the related block.
- Failure filtering and inhibition
  - The filtering function is applied to many kinds of the occurred failure, and only the failure of the original reason is reported.
  - Function of inhibiting reporting a specific kind of failure or a specific system according to the operator’s request
- Inquiring and changing the failure configuration information
  Inquiring and changing the parameters such as the failure severity and the threshold for the generation

© SAMSUNG Electronics Co., Ltd.

- Failure audit
  Auditing the failure is performed when initializing and restarting the system and when the operator requests to minimize the inconsistency of the failure information between the ACR and the upper management system.
- Failure history information management and save
- Call fault reporting
  In case of the call fault, the related information (call status, error code, MS information, etc.) is collected and reported to the management system.
- DD Interface
  The interface between DD and applications is provided for statistics and status management of devices.

UFM Implementation

UFM is implemented in MMA-G and all lower boards as shown below.

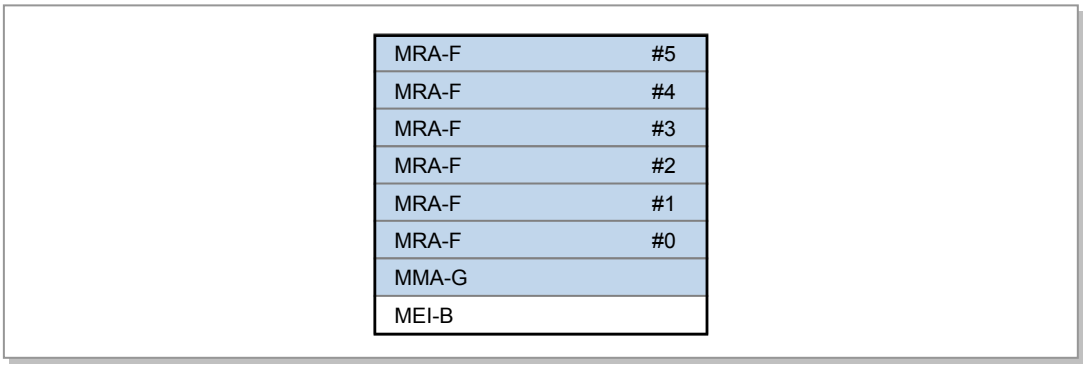

Figure 3.21 UFM Block

3.3.3.7 Loader

Loader manages the entire process from the start of OS to the previous step of ULM running (pre-loading). After that, if ULM is actuated after the initialization script is executed and the registration and loading function is performed, the loader monitors the ULM block.

Loader Main Functions

- System time setting
  Before NTP-based synchronization, the system time is set by receiving the Time of Date (ToD) from a GPS receiver.
- SPI-2213 registration and loading
  - Registration of the SPI-2213 to the Registration Server (RS)
  - Determination of the loading method
    1) Loading as the latest version via the version comparison: Loading via its own nonvolatile storage or remote IS
    2) Loading via the console port (at this time, omitting the registration of the SPI-2213 to the RS)
- Backing up and restoring the software image and the PLD
  Loader saves the software image and the PLD of the latest version in its own nonvolatile storage and restores it as the corresponding information when required. (In case of PLD, back-up by operator's command)
- ULM monitoring
  Loader monitors whether the ULM block operates normally and if it is abnormal, this restarts it.

Loader Implementation

Loader is implemented on the MMA-G and all lower board as shown below.

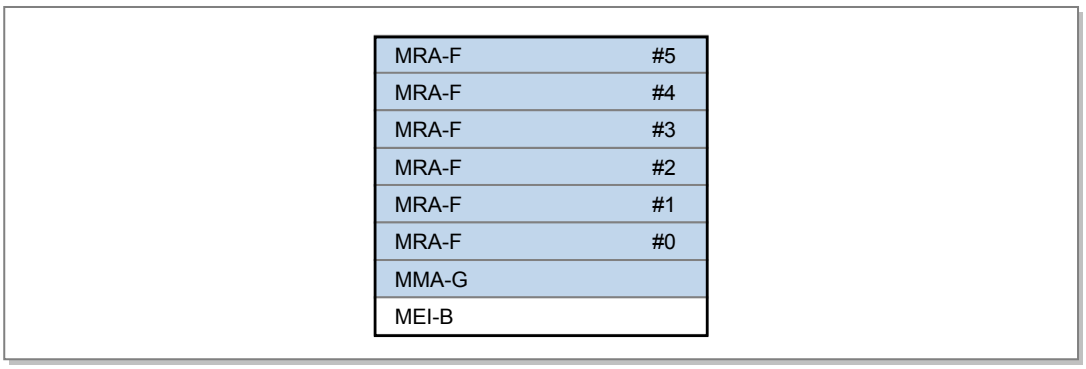

Figure 3.22 Loader Block

© SAMSUNG Electronics Co., Ltd.

3.3.3.8 Universal Loading Management (ULM)

ULM downloads and executes the packages that are identified in the file list downloaded by loader during pre-loading process. Also, ULM monitors the executed software and provides the running software information, and supports the restart and the software upgrade by the command. In addition, in the initialization stage, ULM sets the system time by using the Time of Date information obtained from a GPS receiver and periodically performs the synchronization with the NTP server by actuating as an NTP client after the loading is completed.

ULM Main Functions

- System initialization and reset
  - System reset by command
  - Act as internal RS & IS of lower board
- Software management
  - Monitor the operation of software block and restart the software block in abnormal state
  - Software restart by command
  - Provide information on software block and the status
- Inventory Management
  - ULM provides the information such as the software version for the components, the PBA ID, the PBA version and the serial number, etc.
  - Function of reporting the inventory information when performing the initialization, adding and extending the components
- Online upgrade and version management for the software
  ULM provides the functions of updating the software and the firmware, upgrading the package and managing the version.
- System time information synchronization
  Synchronize system time information with NTP server as a NTP client and transmit the time information to the lower boards
- Time Zone setup
  Setup Time Zone and Daylight Saving Time (DST)
- Mortem time update
  Setup mortem time after system time information synchronization

ULM Implementation

ULM is implemented on the MMA-G and all lower board as shown below.

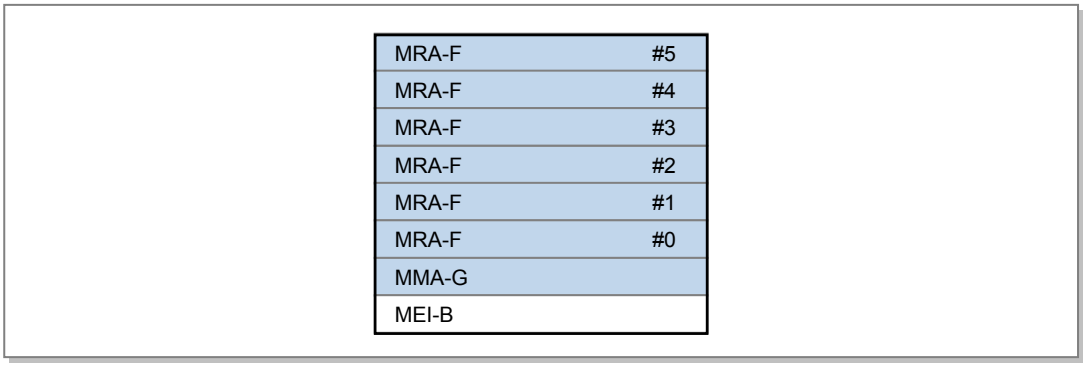

Figure 3.23 ULM Block

3.3.3.9 Common Performance Management (OPM)

OPM collects and provides the performance data for the upper management system operator to know the SPI-2213 performance. The OPM collects the event generated during the system operation and the performance data and transmits them to the management system. The collection cycle of the statistics data of the actual OPM can be set as 15 minutes, 30 minutes, 60 minutes, and if the entire statistics file of the binary format is created every 15 minutes, the management system collects it periodically via the FTP/SFTP.

OPM Main Functions

- Record and collect statistics data
  Record statistics data to the memory and generate the statistics file by regularly collecting data per each board
- Save the statistics data
  Save the statistics data of each board in its own nonvolatile storage during up to eight hours
- Inquire and change the statistics configuration information
  Inquire and change the collection cycle (BI) and the threshold of the statistics data
- Threshold Cross Alert (TCA)
  Generate the TCA (Critical, Major, Minor) according to the defined threshold in every collection cycle and report it to the UFM
- Monitor the statistics in real time
  Provide the real-time monitoring function for the specific statistics item designated by the operator

© SAMSUNG Electronics Co., Ltd.

OPM Implementation

OPM is implemented on the MMA-G and all lower board as shown below.

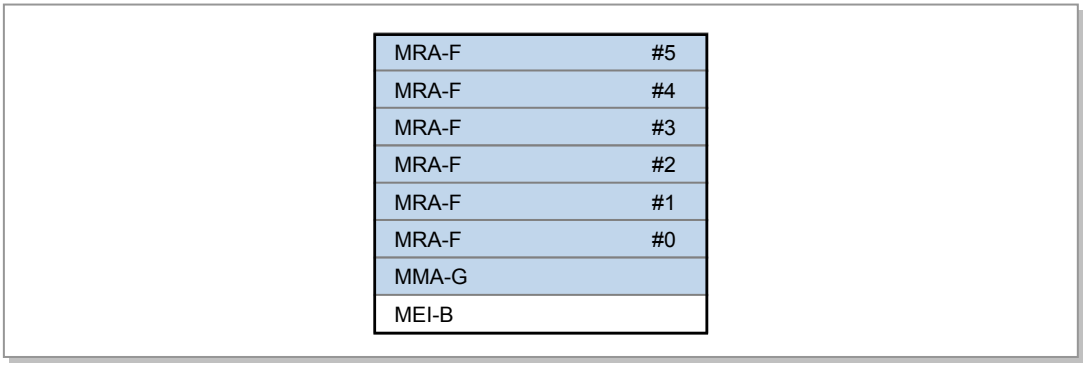

Figure 3.24 OPM Block

3.3.3.10 Common Subscription Service Management (OSSM)

OSSM distributes the PLD data necessary for the software blocks, and reports the data changed to the corresponding software block if PLD data are changed. Also, it supports the function to maintain the consistency of PLD data that are scattered in the system.

OSSM Major Functions

- PLD distribution
  OSSM loads PLD to the shared memory for software block in order to access PLD
- PLD change report
  Report the changes of PLD to the corresponding software block
- PLD audit
  Maintain the consistency of PLDs which are distributed in the SPI-2213 (between main board and lower boards)

OSSM Implementation

OSSM is implemented on the MMA-G and all lower board.

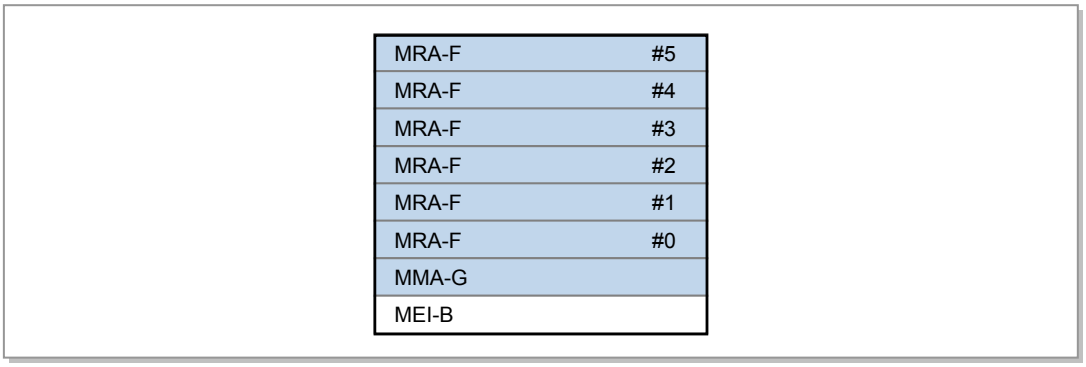

Figure 3.25 OSSM Block

3.3.3.11 Common Event Router (OER)/Common Event Viewer (OEV)

The OER/OEV manages the event history as the text format. The OER/OEV transmits the information on all the events received from the OAM applications to the related agent (OAGS, WebEMT), and creates and saves the history file of the daily/hourly events, and displays the log contents on the operator window (IMISH) in real time.

OER Major Functions

- Event transmission
  OER/OEV transmits the information on the generated event to the OAGS or the WebEMT block, thus it enables to report it to the management system.
- Creating and saving the event history file
  OER/OEV creates and saves the daily/hourly event history file in its own nonvolatile storage as the 1 Mbyte maximum size.
- Event display
  OER/OEV displays the event generated in the SPI-2213 on the operator window (IMISH) in real time.

OER/OEV Implementation

OER/OEV is implemented on the MMA-G as shown in the figure below.

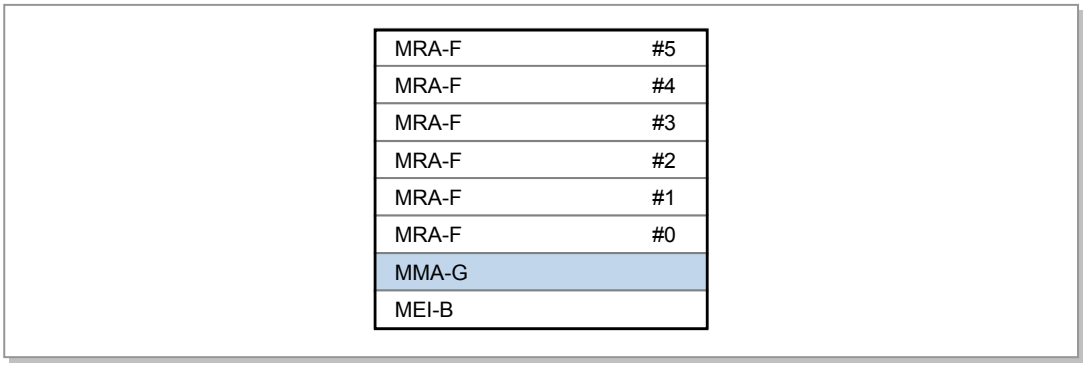

Figure 3.26 OER/OEV Block

© SAMSUNG Electronics Co., Ltd.

3.3.3.12 Common Configuration Management (OCM)

OCM manages the SPI-2213 configuration and parameter with PLD, and it provides the data that are necessary for the software blocks. Other software blocks can approach PLD by the internal subscription service (OSSM), and through the command from EMI.
OCM provides the following functions: SPI-2213 configuration grow/degrow, inquiry and change of configuration data and operational parameters.

OCM Major Functions

- ACR configuration management
  Manage the SPI-2213 system configuration with PLD
- PLD inquiry and change
  - Upper management system inquires and changes PLD by command
  - PLD changes are updated in its own nonvolatile storage by operator's command.
- PLD audit
  For the consistent PLD data with the upper management system
- Grow/degrow of resources
  Link, board, sector, the auxiliary devices in the SPI-2213

OCM Implementation

OCM is implemented on the MMA-G. as shown in the figure below.

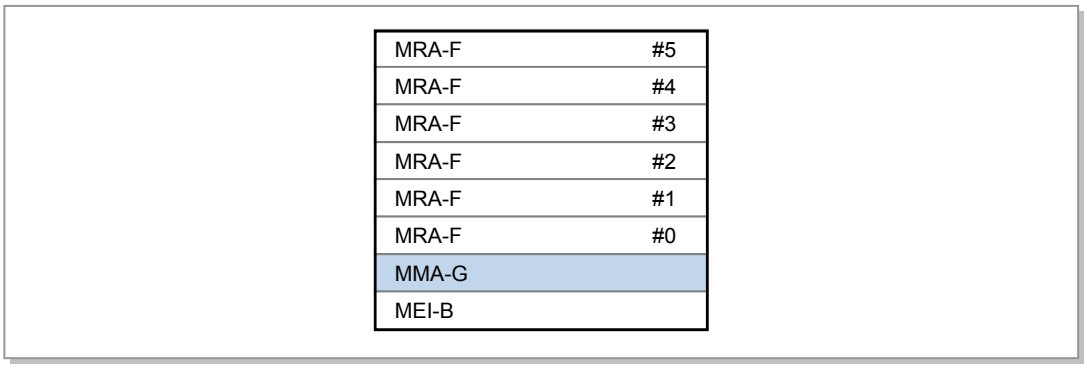

Figure 3.27 OCM Block

3.3.3.13 RAS Diagnosis Management (RDM)

The RDM checks if internal and external connection paths or resources of the SPI-2213 are normal. The connection paths are roughly divided into the external path between the SPI-2213 internal IPC path and another NE and the path between ACR and the SPI-2213.
In addition, it supports the on-demand test at the request of an operator and the periodical test according to the schedule defined by the operator.

RDM Functions

- Path Test
  - Internal path test: Ping test for the IPC path of the board level in NE
  - External path test: Traceroute test for external hosts
  - Traffic path test: Test for the UDP message-based bearer path between ACR and the SPI-2213
- Software Block Test
  Ping test for main programs by processors
- RF Exchange Test
  Tx path, Receive Signal Strength Indicator-based (RSSI-based) Rx path and VSWR diagnosis
- DU-RRH Loopback Test
  Support of loopback function for ‘Digital I/Q and C & M’ interface
- Backhaul performance monitoring test
  Quality (packet loss, delay and delay variance) measurement for backhaul between ACR and the SPI-2213
- Periodical online test by the operator setting
- Change of the Diagnosis Schedule
  Schedule setup, such as diagnosis period, start time and end time of periodical online test
- Support of Call Trace Function
  It reports the call trace information (signaling message of a specific MS, RF parameter, and traffic statistics) to the management system via SNMPD.
- Virtual Interface (VIF) generation and removal
  Generate and remove VIF based on physical link configuration in PLD
- VIF state management
  Change the state of physical VIF with link failure
- RF Module Setup and Control
  Transmission of the setup information required for the RF module, redundancy structure and management of failure/status

© SAMSUNG Electronics Co., Ltd.

RDM Configuration

The RDM is implemented on the MMA-G as shown in the figure below.

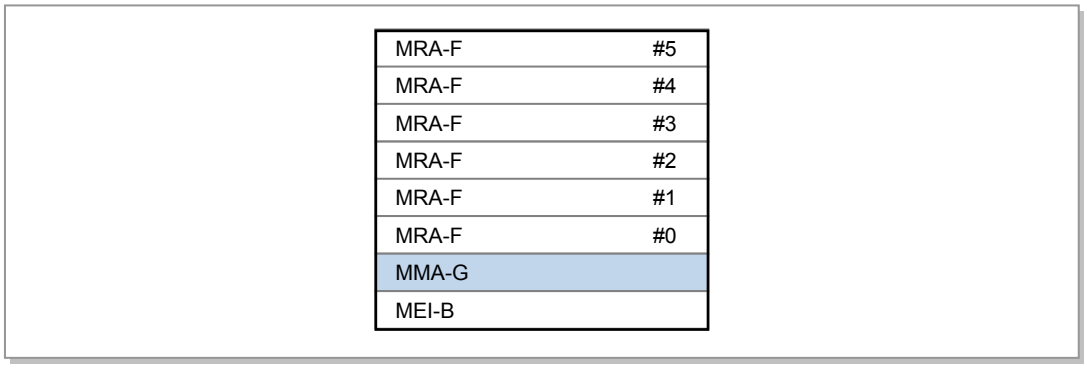

Figure 3.28 RDM Block

This page is intentionally left blank.

© SAMSUNG Electronics Co., Ltd.

CHAPTER 4. Message Flow

4.1 Call Processing Message Flow

4.1.1 Initial Access

The following is the procedure to set the Provisioned Service Flow (SF) of the network-initiated Dynamic Service Add (DSA) mode in the process of the initial network entry.
An MS periodically receives Downlink Channel Descriptor (DCD), Downlink-MAP (DL-MAP), Uplink Channel Descriptor (UCD) and Uplink-MAP (UL-MAP) messages from the RAS in the initial access, acquires the downlink channel synchronization and the uplink parameter and sets the Provisioned SF connection.
The ACR supports the PMIP and simple IP methods when allocating an IP address to the MS. When the PMIP method is used, the ACR performs the DHCP proxy function.
When the simple IP method is used, the ACR performs the DHCP relay agent function.

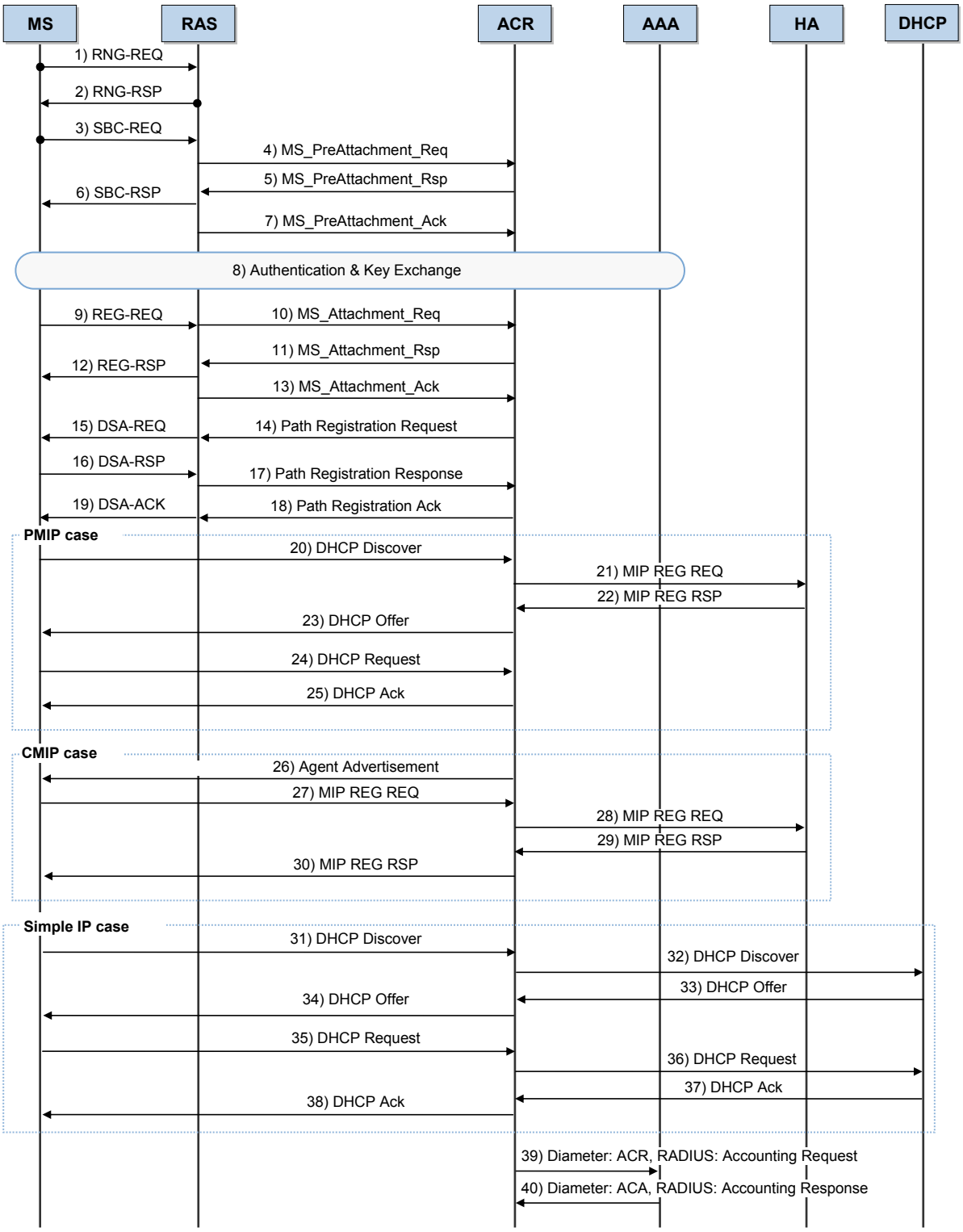

Figure 4.1 Initial Access Process

© SAMSUNG Electronics Co., Ltd.

Classification	Description
(1)~(2)	The MS transmits the RNG-REQ message including its own MAC address and the Ranging Purpose Indication to the RAS, and the RAS allocates the Basic & Primary Management CID and transmits the RNG-RSP message to the MS.
(3)~(4)	The MS transmits the SBC-REQ message to the RAS including the physical parameter and the authorization policy information which it supports. The RAS transmits the MS_PreAttachment_Req message to the ACR including the authorization policy support via the Default IP address and the UDP port number of the ACR.
(5)~(7)	The ACR transmits the MS_PreAttachment_Rsp message to the RAS including the supported authorization policy, and the RAS extracts the information received from the ACR, attaches it to the SBC-RSP message and transmits it to the MS. Then, RAS transmits the MS_PreAttachment_Ack to the ACR, and notifies the start point of the next process (EAP transmission) explicitly.
(8)	The procedure of the subscriber authentication between the MS and the AAA server is performed, and when the authentication is successful, the ACR receives the provisioned policy information for each subscriber from the AAA server. For the detailed information, see '4.1.2 Authentication'.
(9)~(13)	The MS transmits the REG-REQ message to the RAS including the registration information (MS Capabilities, CS Capabilities, HO Support, etc), and the RAS transmits the MS_Attachment_Req message to the ACR to inquire the corresponding MS Capability and the corresponding CS Capability. The ACR transmits the response to the RAS including the result of the requested registration information, and the RAS transmits the REG-RSP message to the MS. The RAS transmits the MS_Attachment_Ack to the ACR, and notifies the start point of the next process explicitly.
(14)~(19)	To request the DSA for the Pre-Provisioned SF, the ACR transmits the RR-Request message to the RAS, including the SFID, the Resource Description field (SF/CS parameter) and the Data Path ID (=GRE Key) field to set the data path with the RAS. The RAS receives this message and performs admission control for this, and then transmits the DSA-REQ message to the MS. The MS attaches the Confirmation Code to the DSA-RSP message as a result of DSA-REQ and transmits the message to the RAS, and the RAS transmits the RR-Response message to the ACR including the Data Path ID to set the data path with the ACR. Then the ACR transmits the RR-Confirm message to the RAS, and the RAS transmits the DSA-ACK message to the MS.
(20)~(25)	This is the procedure to allocate the IP address to the MS, which uses the PMIP, if the MS requests the DHCP procedure to acquire the IP address, the ACR performs the PMIP procedure.
(26)~(30)	This is the procedure to allocate the IP address to the MS, which uses the CMIP, if the MS requests the MIP registration directly, the ACR operates as the FA and interworks with the HA and allocates the MIP address to the MS.

© SAMSUNG Electronics Co., Ltd.

(Continued)

Classification	Description
(31)~(38)	This is the procedure for allocating an IP address to the MS that uses the simple IP method. If the MS requests the DHCP procedure to receive an allocated IP address, the ACR performs the DHCP relay agent function to receive a simple IP address from the external DHCP server and then sends the received IP address to the MS.
(39)~(40)	When the Diameter protocol is used, it is notified that accounting has begun for the service flow using the ACR/ACA message. When the RADIUS protocol is used, the Accounting Request/Accounting Response message is used.

4.1.2 Authentication

At the Time of Initial Access

The MS authentication procedure performed in '4.1.1 Initial Access' is as follows:

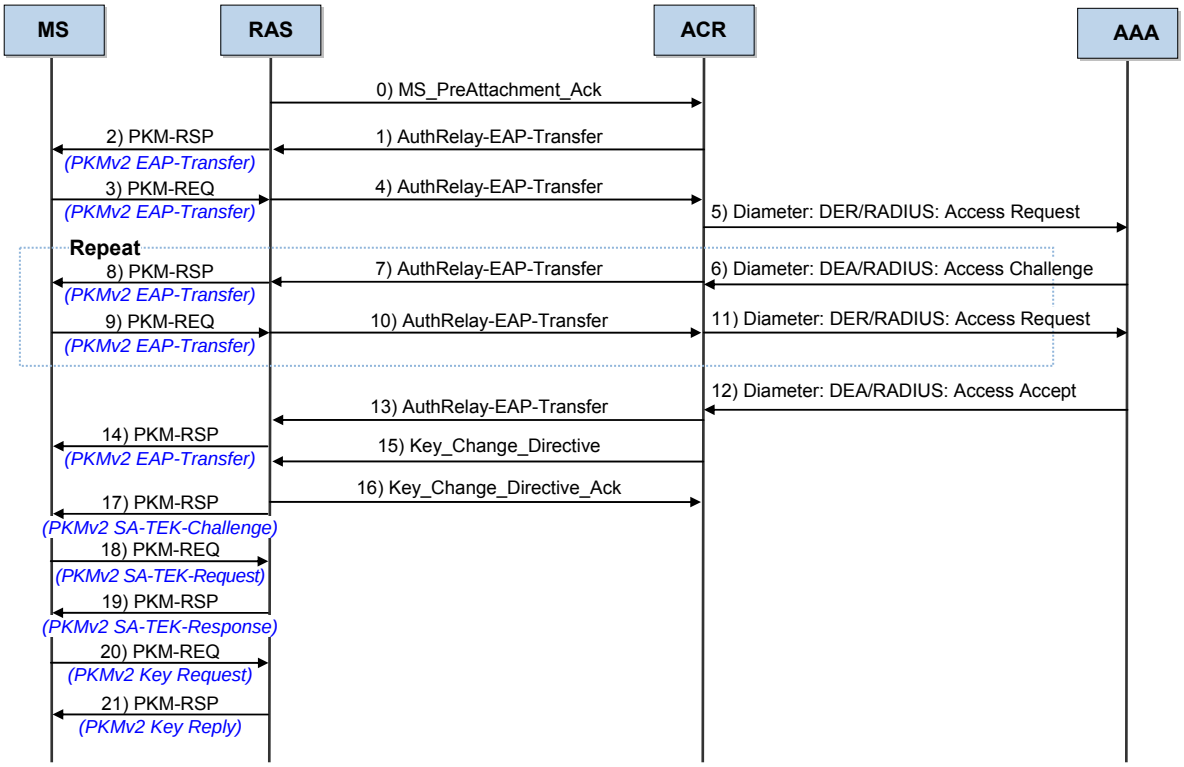

Figure 4.2 Authentication Procedure (At the time of initial access)

© SAMSUNG Electronics Co., Ltd.

Classification	Description
(0)~(2)	When the ACR receives MS_PreAttachment_Req_Ack for SBC-RSP from the RAS, the ACR includes the EAP Request/Identity payload in the AuthRelay-EAP-Transfer message and transmits the message to the RAS to start the EAP authentication. The RAS relays the received EAP payload to the MS by using the PKMv2 EAP-Transfer/PKM-RSP message.
(3)~(5)	The MS sends the RAS a PKMv2 EAP-Transfer/PKM-REQ message with the NAI included in the EAP Response/Identity. The RAS relays it to the ACR using the AuthRelay-EAP-Transfer message. The authenticator of the ACR then analyzes the NAI and sends the MS the Diameter DEAP Request (DER) message (when the Diameter protocol is used) or the Access Request message (when the RADIUS protocol is used).
(6)~(11)	The subscriber authentication procedure is performed between the MS and AAA server using the EAP-method. The authentication procedure is performed using the Diameter EAP Request (DER)/Diameter EAP Answer (DEA) message (when the Diameter protocol is used) or the Access-Challenge/Access-Request message (when the RADIUS protocol is used).
(12)~(16)	When the authentication is successfully completed, the ACR receives the Master Session Key (MSK) that is the upper key to provide security and provisioned policy information per subscriber from the AAA server using the Diameter EAP Answer (DEA) message (when the Diameter protocol is used) or the Access-Accept message (when the RADIUS protocol is used). The ACR generates the AK from the MSK and sends the RAS a Key_Change_Directive message including the generated AK Context information and Security Association (SA) information for the MS. In addition, the RAS relays the EAP Success information to the MS using the PKMv2-EAP-Transfer message.
(17)~(19)	After the EAP authentication, the RAS verifies the AK key value which it has with MS, and transmits the SA-TEK-Challenge message to the MS to notify the start of the SA negotiation, and the MS verifies the CMAC of the SA-TEK-Challenge message, checks the AK key value, and transmits the SA negotiation information to the RAS by using SA-TEK-Request. The RAS transmits SA-TEK-Response including the AKID and the SA Descriptor which is the final result of the SA negotiation to the MS.
(20)~(21)	The MS requests the Traffic Encryption Key (TEK) to the RAS by using PKMv2 Key-Request, and the RAS creates the TEK randomly and transmits it to the MS by using the PKMv2 Key-Reply message. Then, the TEK is transmitted by being encrypted via the Key Encryption Key (KEK).

NOTE

Keys and Functions

The functions of the keys are as follows.

- MSK: creates the AK
- AK: creates the CMAC key
- KEK: encrypts the TEK
- CMAC key: provides integrity for the MAC management message
- TEK: encrypts traffics in wireless sections

At the Time of Authenticator Relocation

When the MS performs the CSN-anchored Handover (HO), or the Idle Mode MS moves to another ACR area and performs the location update, the following re-authentication procedure is performed to move the authenticator from the existing Serving ACR to the Target ACR. The Target ACR triggers in order that the MS performs the EAP authentication procedure with the AAA server again, and then, when the result of the authentication result is notified to the Serving ACR, the Authenticator Relocation procedure is completed.

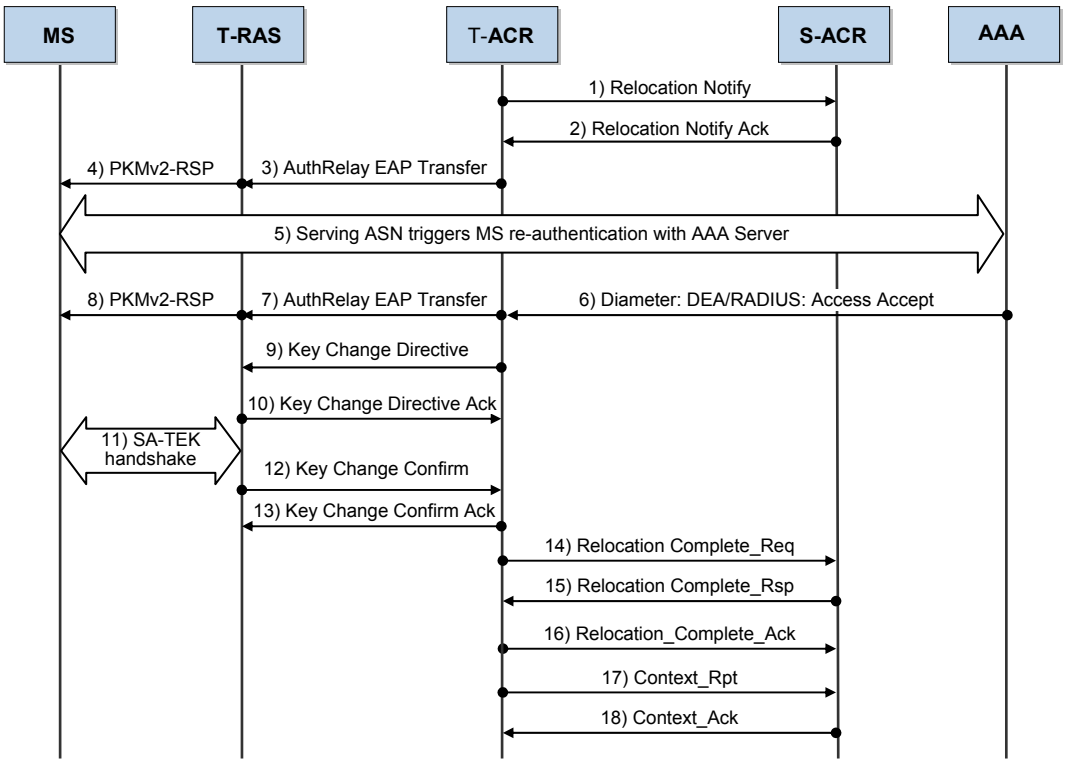

Figure 4.3 Authentication Procedure (At the time of the Authenticator Relocation)

Classification	Description
(1)~(2)	The new authenticator, T-ACR, exchanges the Relocation Notify/Ack message with the previous authenticator, S-ACR, to perform re-authentication and authenticator relocation.
(3)~(11)	The re-authentication procedure is performed in the target area, as the authentication procedure for initial entry. When the Diameter protocol is used, the Diameter EAP Answer (DEA) message is received from the AAA server. When the RADIUS protocol is used, the Access Accept message is received from the AAA server.
(12)~(13)	The RAS sends the Key Change Confirm message to the authenticator (T-ACR) to notify it that re-authentication is complete with the MS.
(14)~(16)	The T-ACR completes the authenticator relocation procedure by exchanging the Relocation Confirm/Ack message with the S-ACR.
(17)~(18)	After the authenticator relocation, the new authenticator notifies the anchor that the authenticator has been changed through the context Rpt procedure.

© SAMSUNG Electronics Co., Ltd.

4.1.3 Status Change

Awake Mode → Idle Mode

If the data traffic is not transmitted/received for a certain time, the status of MS is changed from the Awake Mode to the Idle Mode.

> NOTE
>
> **Sleep Mode → Idle Mode Change**
>
> The MS of the Sleep Mode is not changed into the Idle Mode, immediately. Before being changed from the Sleep Mode into the Idle Mode, the MS is changed to the Awake Mode, first, and then, after requesting DREG, it is changed into the Idle Mode.

The deregistration procedure to be changed into the Idle Mode is divided into the MS-initiated Idle Mode change and the Network-initiated Idle Mode change, and the following indicates the procedure of the MS-initiated Idle Mode change.

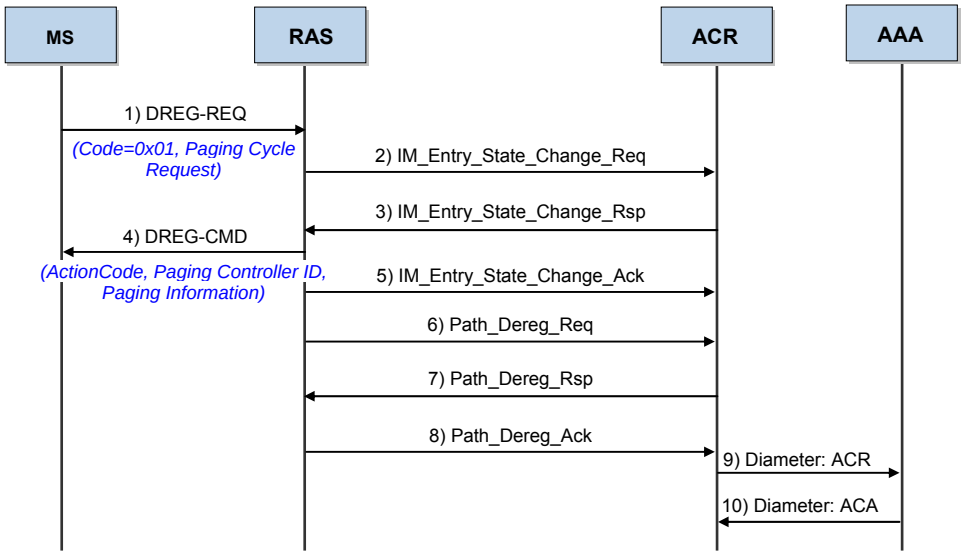

Figure 4.4 Awake Mode → Idle Mode Status Change Procedure

Classification	Description
(1)	When the MS is changed into the Idle Mode, it creates the DREG-REQ message and transmits it to the RAS, and the value of the De-Registration Request Code field is set as 0x01.
(2)~(5)	The RAS creates the IM_Entry_State_Change_Req message including the context information of the MS and transmits it to the ACR (Paging Controller), and the ACR creates the IM_Entry_State_Change_Rsp message including the Action Code (0 x 05), the paging information (PAGING_CYCLE, PAGING_OFFSET) and the Idle Mode Retain Flag and transmits the message to the RAS. The RAS transmits the DREG-CMD including the received information to the MS.

(Continued)

Classification	Description
(6)~(8)	If the Network re-entry from the MS is not transmitted until the Idle Resource Retain timer expires, the RAS performs the Data Path (DP) Release procedure with the ACR.
(9)~(10)	As the MS has been transited to Idle mode, an accounting end message is sent to the AAA server to update the accounting information using the ACR/ACA message (if the Diameter protocol is used). If the RADIUS protocol is used, no accounting report is made when the MS has been transited to Idle mode. Then when the MS is returned to Awake mode, the accounting information is updated at the specified interim interval using the Accounting Request interim message.

Awake Mode → Sleep Mode

The Awake Mode and the Sleep Mode of the MS can be classified only by the RAS, and the ACR does not classified the two kinds of status, and recognizes and manages both of them as the Awake Mode.

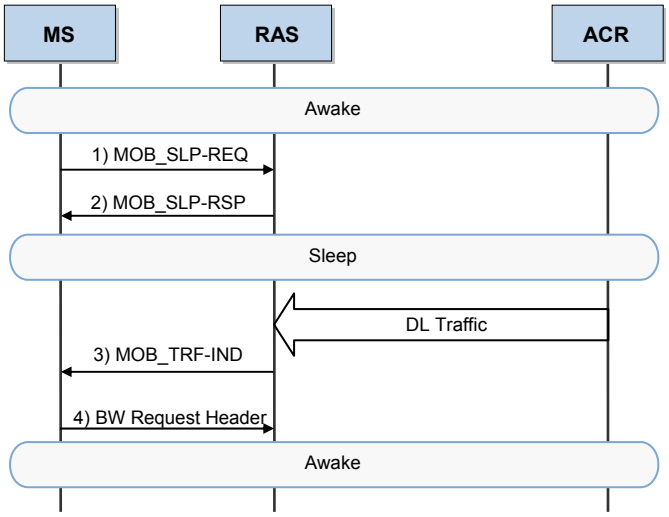

Figure 4.5 Awake Mode ↔ Sleep Mode Status Change Procedure

Classification	Description
(1)~(2)	If the MS does not transmit/receive the data for a certain time (set by the MS/RAS as the parameter), timeout is generated in its own timer, thus the mode is changed from the Awake Mode to the Sleep Mode. Then, the MS transmits the MOB_SLP-REQ message to the RAS, and the RAS transmits the MOB_SLP-RSP message for this, and the status of MS is changed into the Sleep Mode.
(3)~(4)	If the terminating traffic exists in the Sleep Mode MS, the RAS transmits the MOB_TRF-IND message in the listening period of the corresponding MS, and the MS which receives this, sets the BW value as 0 in the UL BW Request and transmits it to the RAS. The RAS receives this message and recognizes that the status of MS has been changed into the Awake Mode, and transmits the traffic to the MS.

© SAMSUNG Electronics Co., Ltd.

Idle Mode → Awake Mode (QCS)

When an MS in Idle Mode responds for the paging because of incoming traffic or sends the traffic, the status of MS is changed from the Idle Mode into Awake Mode. In both cases, the MS should perform the network re-entry procedure to change the status into the Awake Mode and the Mobile WiMAX system of Samsung basically takes account of the QCS procedure as the network re-entry method.
The following is the case where the mode is changed from the Idle Mode to the Awake Mode at the time of the Network re-entry (QCS).

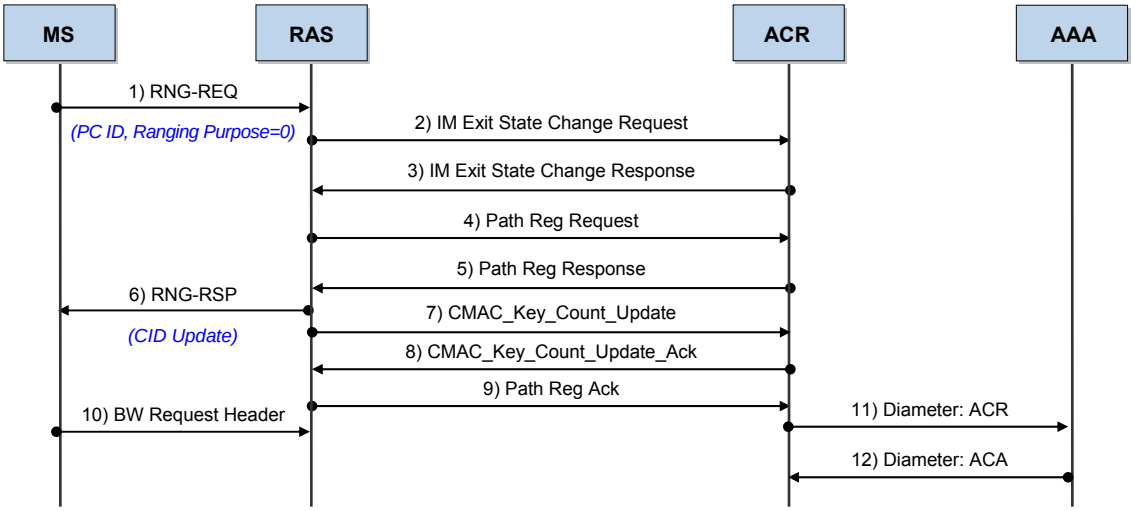

Figure 4.6 Idle Mode → Awake Mode (QCS) Procedure

Classification	Description
(1)	If the Idle Mode MS is changed into the Awake Mode, the MS creates the RNG-REQ message including the MAC address and the Paging Controller ID value and transmits the message to the RAS. Then, the value of the Ranging Purpose Indication field is set as 0x00 (=Network Re-entry).
(2)~(3)	The RAS creates the IM Exit State Change Request message including the parameter of the received RNG-REQ message and transmits the message to the ACR. The ACR checks the status information of the Idle Mode of the MS, creates the IM Exit State Change Response message including the Idle Mode Retain information to perform the QCS procedure and the AK Context information for the CMAC authentication and transmits the message to the RAS.
(4)~(5)	The RAS transmits the Path Registration Request message including the data path information such as the (UL) GRE Key to the ACR to set the data path with the ACR. The ACR responds to the RAS as the Path Registration Response message including the data path information such as the (DL) GRE Key for this.
(6)	The RAS replies with the RNG-RSP message along with HO Optimization Flag for the QCS and relevant CID_Update and SA-TEK_Update information.
(7)~(8)	The RAS notifies the new CMAC_KEY_COUNT value updated by the MS to the ACR, which is an authenticator.

(Continued)

Classification	Description
(9)	The ACR receives the Path Registration Ack message and is notified of data path set results.
(10)	If an MS receives RNG-RSP, the MS transmits BW Request Header to notify the system that the status is changed into the Awake Mode.
(11)~(12)	If the Diameter protocol is used, as the MS has transited to Awake mode and a new transport CID has been allocated, it sends a new accounting start message to the AAA server to update the AAA server's accounting information. If the RADIUS protocol is used, no accounting report is made when the MS has been transited to Awake mode and the accounting information is updated at the specified interim interval using the Accounting Request interim message.

NOTE

Changing from Idle Mode to Awake Mode

For the procedure that the MS status is changed from Idle Mode to Awake Mode due to paging, refer to ‘4.1.5’.

© SAMSUNG Electronics Co., Ltd.

4.1.4 Location Update

Inter-RAS Location Update

The following is the location update procedure when the MS moves to other paging group in the same ACR.

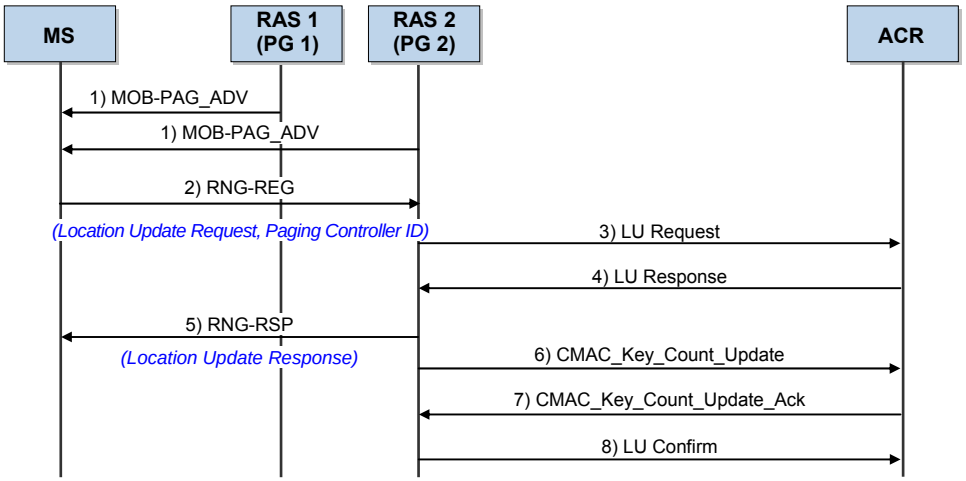

Figure 4.7 Inter-RAS Location Update Procedure

Classification	Description
(1)	When the Idle Mode MS in the paging group 1 moves to the paging group 2, it receives the PAG-ADV message and recognizes that the location has been changed.
(2)~(3)	The MS transmits the RNG-REQ message to a new RAS (RAS 2) including the MAC address, the Location Update Request, and the Paging Controller ID and the RAS 2 transmits the Location Update Request message to the ACR.
(4)~(5)	The ACR transmits the Location Update Response message including the paging information and the AK Context information to the RAS 2. The RAS 2 checks the CMAC validation and transmits the RNG-RSP message including the LU Response to the MS, and notifies that the location update procedure has been completed by transmitting the LU Confirm to the ACR.
(6)~(7)	The RAS notifies the new CMAC_KEY_COUNT value updated by MS to the ACR, which is an authenticator.
(8)	The ACR sends the LU Confirm message and is notified that the location update procedure is completed.

Inter-ACR Location Update (Anchor Relocation)

When the MS in the Idle mode moves to other ACR area, the Inter-ACR Location Update (LU) procedure is performed. At this time, the procedure is different depending on whether the MIP-based CMIP/PMIP method or the simple IP method is used.

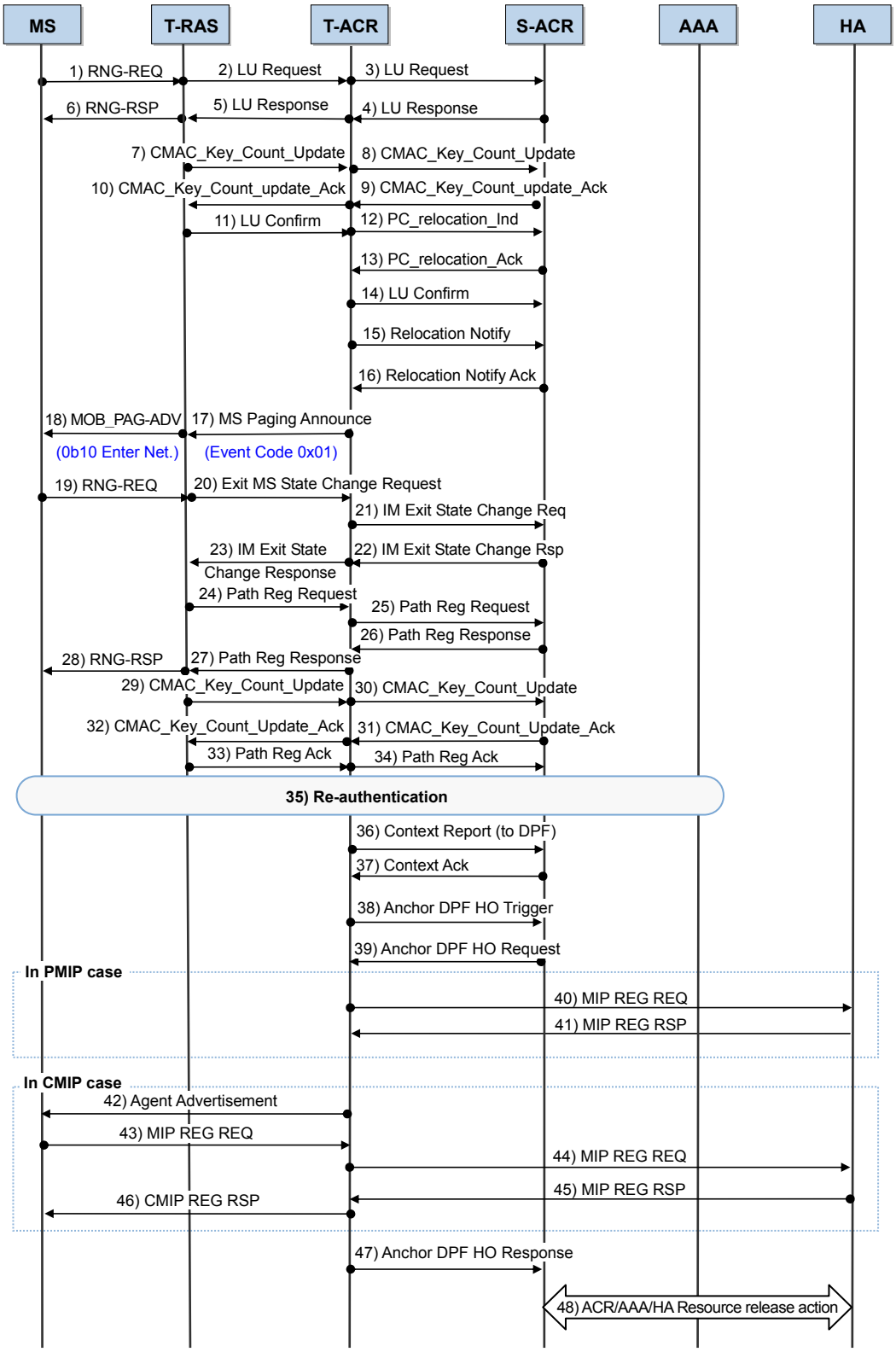

Figure 4.8 Inter-ACR Location Update Procedure (CMIP/PMIP Case)

© SAMSUNG Electronics Co., Ltd.

Classification	Description
(1)~(2)	If the paging group is changed, the MS transmits the RNG-REQ message including the MAC address, the Location Update Request and the Paging Controller ID to a new T-RAS (Target RAS). The T-RAS transmits the Location Update Request message including the Paging Controller ID to its own default ACR.
(3)~(5)	When the received Paging Controller ID does not belong to the Target ACR (T-ACR), the T-ACR transmits the Location Update Request message of which the APC Relocation Destination is set as its own Paging Controller ID to the previous Serving ACR (S-ACR) via the R4 interface to change the Paging Controller. The S-ACR responds by using the Location Update Response message including the information on whether to allow the Paging Controller Relocation and the Context information of the corresponding MS.
(6)	When the T-RAS receives the Location Update Response message, it sets as 'LU Response=Success', transmits the RNG-RSP message to the MS, and checks if the paging controller is changed into the T-ACR by transmitting the LU Confirm message.
(7)~(10)	The T-RAS notifies the new CMAC_KEY_COUNT value updated by the MS to the S-ACR, which is an authenticator.
(11)	The LU Confirm message is sent to confirm that the T-ACR is now the paging controller.
(12)~(14)	The T-ACR, after Location Update Confirm, notifies the FA and the Authenticator which are still located in the S-ACR of that the Paging Controller has been changed.
(15)	The T-ACR requests the FA Relocation for the MS to the S-ACR.
(16)~(18)	The S-ACR which receives the request of the FA/DPF Relocation from the T-ACR allows the relocation in the T-ACR, then, the T-ACR/RAS requests paging to the corresponding MS to trigger the relocation.
(19)~(34)	The MS which receives the MOB_PAG-ADV message performs the QCS which is the Network Re-Entry procedure with the network.
(35)~(37)	This is the procedure to relocate the Authenticator from the S-ACR to the T-ACR, the T-ACR triggers in order that the MS performs the EAP authentication procedure with the AAA server, and notifies the S-ACR of the authentication result, then completes the Authenticator Relocation procedure.
(38)~(39)	The T-ACR requests the Anchor DPF Relocation for the MS to the S-ACR.
(40)~(41)	If the MS uses the PMIP, the T-ACR instead of the MS registers the MIP to the HA.
(42)~(46)	If the MS uses the CMIP, the ACR operates only as the FA, and the MS registers the MIP in the HA directly.
(47)~(48)	When the anchor DPF relocation is completed successfully, S-ACR releases the existing connection with AAA and HA.

© SAMSUNG Electronics Co., Ltd.

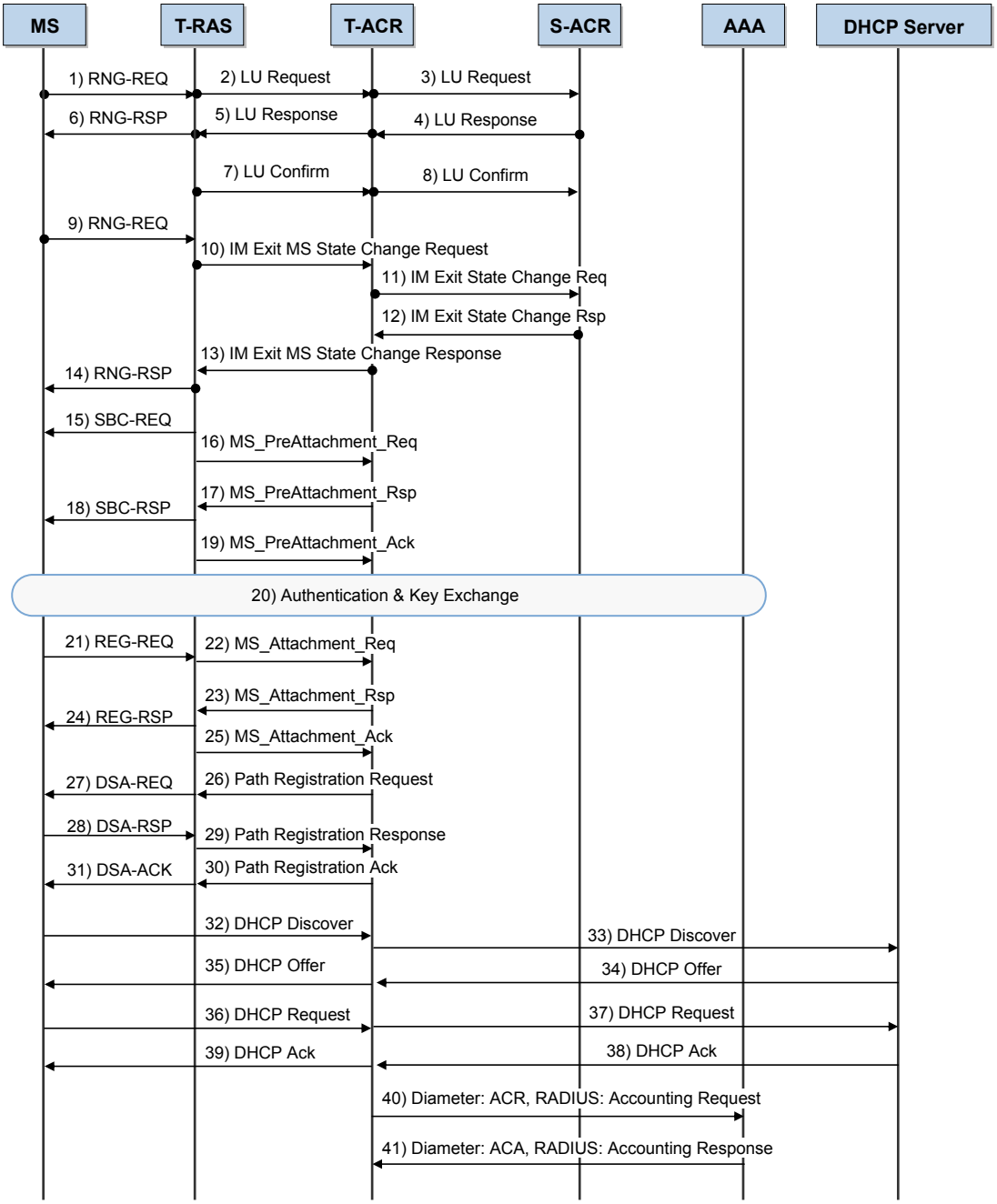

Figure 4.9 Inter-ACR Location Update Procedure (Simple IP Case)

© SAMSUNG Electronics Co., Ltd.

Classification	Description
(1)~(2)	At this time, the procedure is different depending on whether the MIP-based CMIP/PMIP method or the simple IP method is used. When the paging group is changed, the MS sends the new T-RAS (Target RAS) an RNG-REQ message including the MAC address, Location Update Request and Paging Controller ID in order to request a location update. The T-RAS sends its default ACR a Location Update Request message including the Paging Controller ID.
(3)~(5)	If the received Paging Controller ID does not belong to the T-ACR (Target ACR), it sends a Location Update Request message to the S-ACR (Serving ACR) through the R4 interface in order to change the paging controller. At this point, the APC Relocation Destination of the Location Update Request message is set to the Paging Controller ID of the T-ACR. The S-ACR responds with a Location Update Response message including confirmation of whether the paging controller relocation is allowed or not and the Context information for the MS.
(6)	When the T-RAS receives the Location Update Response message, it sends the MS an RNG-RSP message with 'LU Response' set to 'Fail'.
(7)~(8)	The LU Confirm message is sent to notify that the paging controller is maintained in the S-ACR.
(9)~(14)	The MS performs idle mode exit with the S-ACR, and the S-ACR induces full network re-entry in the MS.
(15)~(31)	The MS performs network re-entry with the T-ACR
(32)~(39)	This is the procedure that allocates an IP address to the MS that uses the simple IP method. When the DHCP procedure is requested to allocate an IP address to the MS, the ACR receives a simple IP address from the DHCP server and sends it to the MS (DHCP Relay Agent mode).
(40)~(41)	The T-ACR notifies the AAA server that accounting has begun for the service flow newly generated in the network entry. When the Diameter protocol is used, it is notified that accounting has begun for the service flow using the ACR/ACA message. When the RADIUS protocol is used, the Accounting Request/Accounting Response message is used.

Inter-ASN Location Update

The Inter-ASN location update procedure is the same with the Inter-ACR location update procedure.

4.1.5 Paging

Paging can be classified into the following two types.

- The RAS broadcasts the MOB_PAG-ADV message periodically and notifies the MS of the corresponding paging group. The MS is changed into the Idle Mode and checks if the paging group of the MS is changed by checking the MOB_PAG-ADV message periodically based on the paging information (Paging Cycle, Paging Offset, PGID) received from the system.
- If the traffic to be transmitted to the Idle Mode MS exists in the ACR, the ACR triggers the MOB_PAG-ADV message to the RAS to change the corresponding MS into the Awake Mode.

The following figure is the procedure to perform paging on the Idle Mode MS.

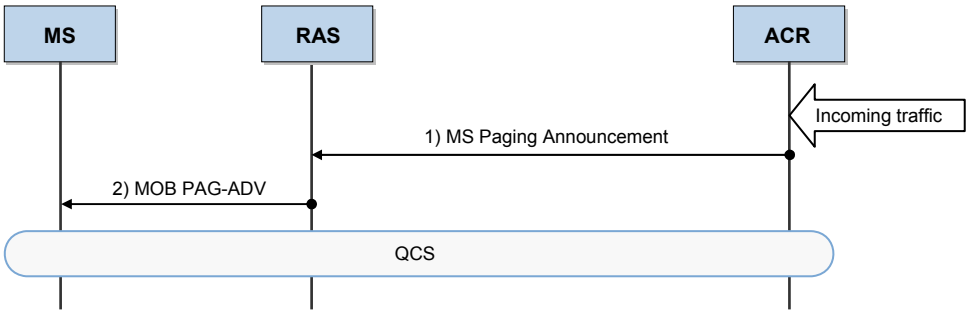

Figure 4.10 Paging Procedure

Classification	Description
(1)~(2)	When receiving the packet to be transmitted to the specific MS, the ACR transmits the MS Paging Announce message including the MAC address, the Paging Group ID and the Action Code (0x10) of the MS when the corresponding MS is the Idle Mode to the RAS. The RAS transmits the MOB_PAG-ADV message including the information received from the ACR to the MS.

After this, the MS performs the QCS procedure with the network. For the information on the QCS procedure, see the procedure of ‘Idle Mode → Awake Mode’ in ‘4.1.3’.

© SAMSUNG Electronics Co., Ltd.

4.1.6 Handover

Inter-RAS Handover

The following is the inter-RAS handover procedure.

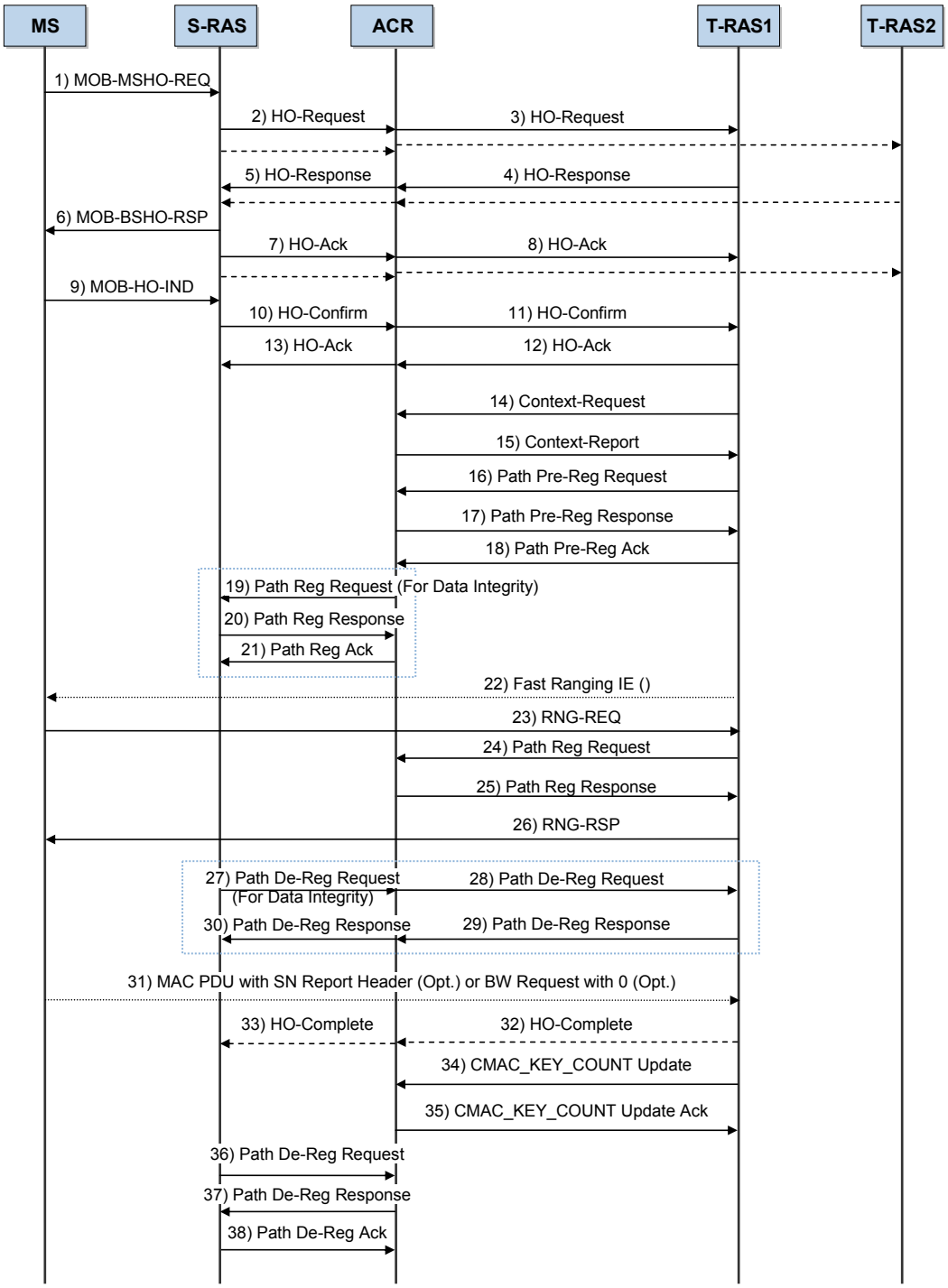

Figure 4.11 Inter-RAS Handover Procedure

Classification	Description
(1)~(3)	The MS transmits the MOB_MSHO-REQ message including the Neighbor BS (RAS) ID and the parameter related to handover to the current Serving RAS (S-RAS) to request handover. The S-RAS transmits the HO-Request message including the received MOB_MSHO-REQ parameter and the context information to the ACR, and the ACR forwards the HO-Request message to the Target RAS (T-RAS).
(4)~(8)	The T-RAS transmits the HO-Response message including its own capability information to the ACR, and the S-RAS transmits the MOB_BSHO-RSP message including the Recommended Neighbor BS-IDs, the HO-ID and the parameter result value to the MS.
(9)~(13)	The MS transmits the MOB_HO-IND message including the HO-IND Type and the Target BS-ID to the S-RAS to notify handover finally, and the S-RAS transmits the HO-Confirm message including the context information and the Data Integrity information (e.g., Buffered SDU SN) of the MS to the T-RAS.
(14)~(15)	The T-RAS transmits the Context-Request message to the ACR (Authenticator) to request the AK Context information, and the ACR responds by using the Context-Response message including the AK context information.
(16)~(21)	The path pre-registration is executed to set a new data path between the ACR and the T-RAS. In addition, a forwarding path is set to send to the T-RAS the traffics that the S-RAS has not yet transmitted to the MS, and the traffics are sent to the T-RAS.
(22)	If T-RAS allows the request of an MS, the T-RAS notifies UL_MAP IE to enable the MS to transmit HO Ranging Request via uplink.
(23)	The MS transmits to the T-RAS the RNG-REQ message that contains the MAC address, Serving BS-ID and HO indication.
(24)~(25)	The path registration procedure is executed to exchange the SF information that is mapped with the data path created between the ACR and the T-RAS through the steps (16)~(18).
(26)	The T-RAS replies with the RNG-RSP message along with HO Optimization Flag, CID_Update, and SA-TEK_Update.
(27)~(30)	If the S-RAS transmits all the traffic to the T-RAS, the forwarding path is removed.
(31)	If an MS successfully receives the RNG-RAS message, the MS transmits Bandwidth Request (BR) MAC PDU to RAS to inform the reception of the message.
(32)~(33)	The T-RAS transmits the HO-Complete message to S-RAS to notify the completion of handover.
(34)~(35)	The RAS notifies the new CMAC_KEY_COUNT value updated by MS to the ACR, which is an authenticator.
(36)~(38)	When the handover procedure is completed, the old path between the S-RAS and the ACR is removed.

Inter-ACR Handover

Inter-ACR handover within the same ASN considers the path extension via the R6 interface. The inter-ACR handover procedure is the same with the inter-RAS handover procedure.

© SAMSUNG Electronics Co., Ltd.

Inter-ASN Handover: ASN-Anchored Mobility

Inter-ASN handover is divided into the ASN-anchored mobility method via the R4 interface and the CSN-anchored mobility method via the R3/R4 interface. The following figure indicates the inter-ASN handover procedure of the ASN-anchored mobility method, the Serving ACR (S-ACR) performs the anchor function.

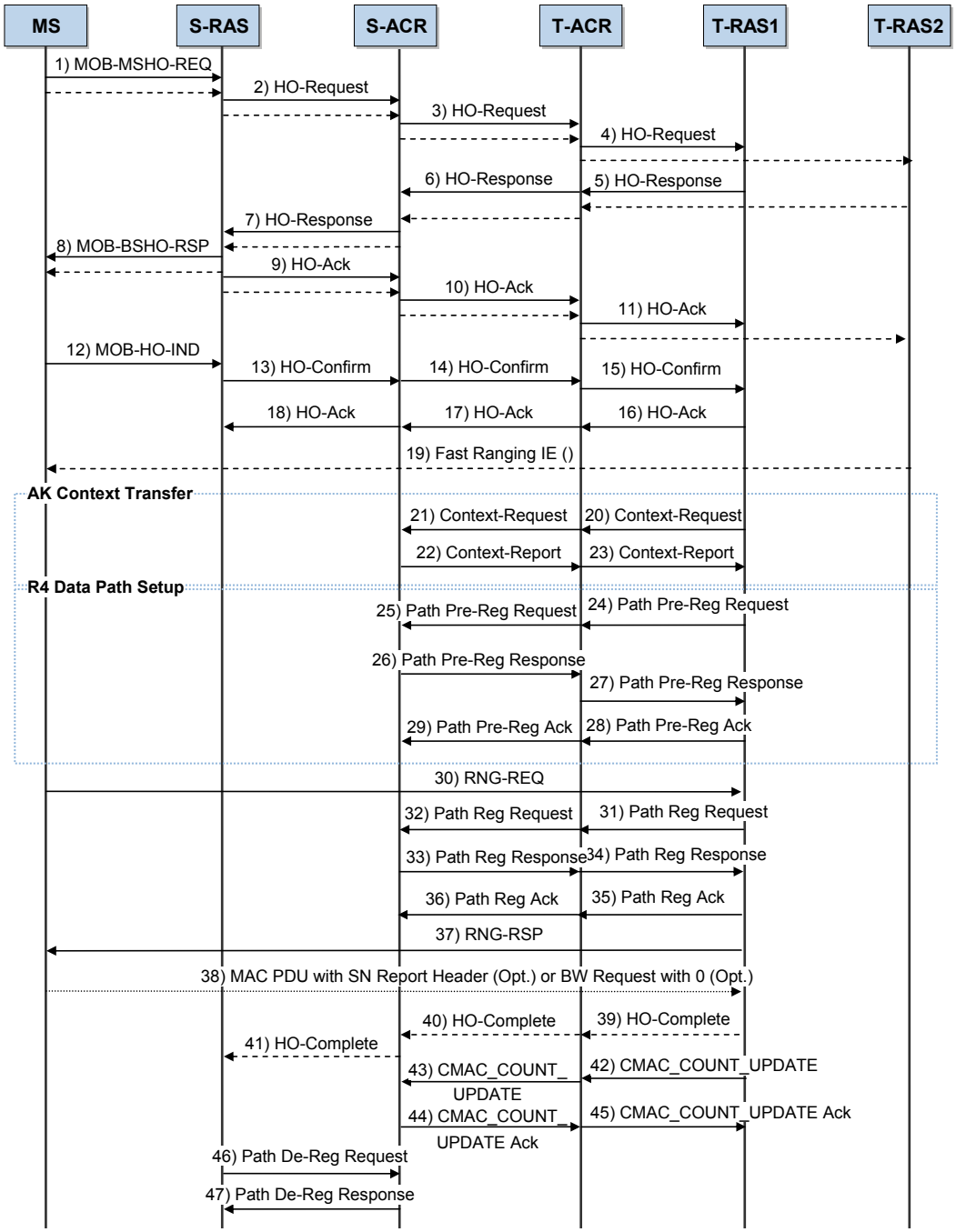

Figure 4.12 Inter-ASN Handover (ASN-Anchored Mobility)

The HO signaling procedure is the same with the inter-RAS handover procedure, however in the HO signaling procedure, the procedure of exchanging the HO signaling message via the R4 interface is added between the S-ACR and the Target ACR (T-ACR).

Classification	Description
(1)~(4)	The MS, in order to request a handover, sends the S-RAS (Serving RAS) an MOB_MSHO-REQ message including the neighbor BS (RAS) ID and handover-related parameters. The S-RAS sends the ACR an HO-Request message including the received MOB_MSHO-REQ parameters and context information. The ACR forwards the HO-Request message to the T-RAS (Target RAS).
(5)~(11)	The T-RAS sends the ACR an HO-Response message including its own capability information. The S-RAS sends the MS an MOB_BSHO-RSP message including the Recommended Neighbor BS-IDs, HO-ID, and parameter results.
(12)~(18)	The MS, in order to notify the final execution of the handover, sends the S-RAS an MOB_HO-IND message including the HO-IND Type and Target BS-ID. The S-RAS sends the T-RAS an HO-Confirm message including the context information and data integrity information (e.g., the Buffered SDU SN) of the MS.
(19)~(22)	The T-RAS sends a Context-Request message to the ACR (authenticator) to obtain the AK Context information. The ACR responds with a Context-Response message including the AK context information.
(23)~(28)	The path pre-registration procedure is performed to set up a new data path between the ACR and T-RAS. In addition, a forwarding path to transmit the traffic that the S-RAS has not yet transmitted to the MS is set up to the T-RAS, and is used to send that traffic to the T-RAS.
(29)	In the event that the T-RAS requests an HO for the MS, it notifies the MS of the UL_MAP IE so that the MS can send an HO Ranging Request message via the uplink.
(30)	The MS sends the T-RAS an RNG-REQ message including the MAC address, Serving BS-ID, and HO Indication.
(31)~(36)	The Path Registration procedure is performed to exchange the service flow (SF) information to be mapped to the data path generated between the ACR and T-RAS in steps (23)~(28).
(37)	The T-RAS responds with an RNG-RSP message including the HO Optimization flag and the CID_Update and SA-TEK_Update information.
(38)	Once it has received the RNG-RSP message successfully, the MS sends a bandwidth request (BR) MAC PDU to the RAS to notify it.
(39)~(41)	The T-RAS sends an HO-Complete message to the S-RAS to notify the handover is completed.
(42)~(45)	The RAS sends the new CMAC_KEY_COUNT updated value for the MS to the ACR which is the authenticator.
(46)~(47)	When the handover procedure is completed, the previous path, i.e. the existing path between the S-RAS and ACR, is released.

© SAMSUNG Electronics Co., Ltd.

Inter-ASN Handover: CSN-Anchored Mobility

The following is handover of the CSN-anchored mobility method among the types of inter-ASN handover, the anchor function is relocated from the Serving ACR (S-ACR) to the Target ACR (T-ACR).

CSN-anchored mobility is composed of the process that Authenticator/DPF Anchor is relocated to the target ACR after ASN-anchored mobility handover is performed.

For convenience, the case that T-ACR triggers the relocation is defined in pull mode and the other case that S-ACR triggers is in push mode. Samsung's Mobile WiMAX system supports both pull mode and push mode.

The CSN-anchored mobility method follows the MIP standard, and the NWG defines the PMIP and the CMIP for the MIP method. The first part of the CSN-anchored handover signaling process is the same as the procedure of ASN-anchored mobility handover and the procedure after the ASN-anchored handover is as follows:

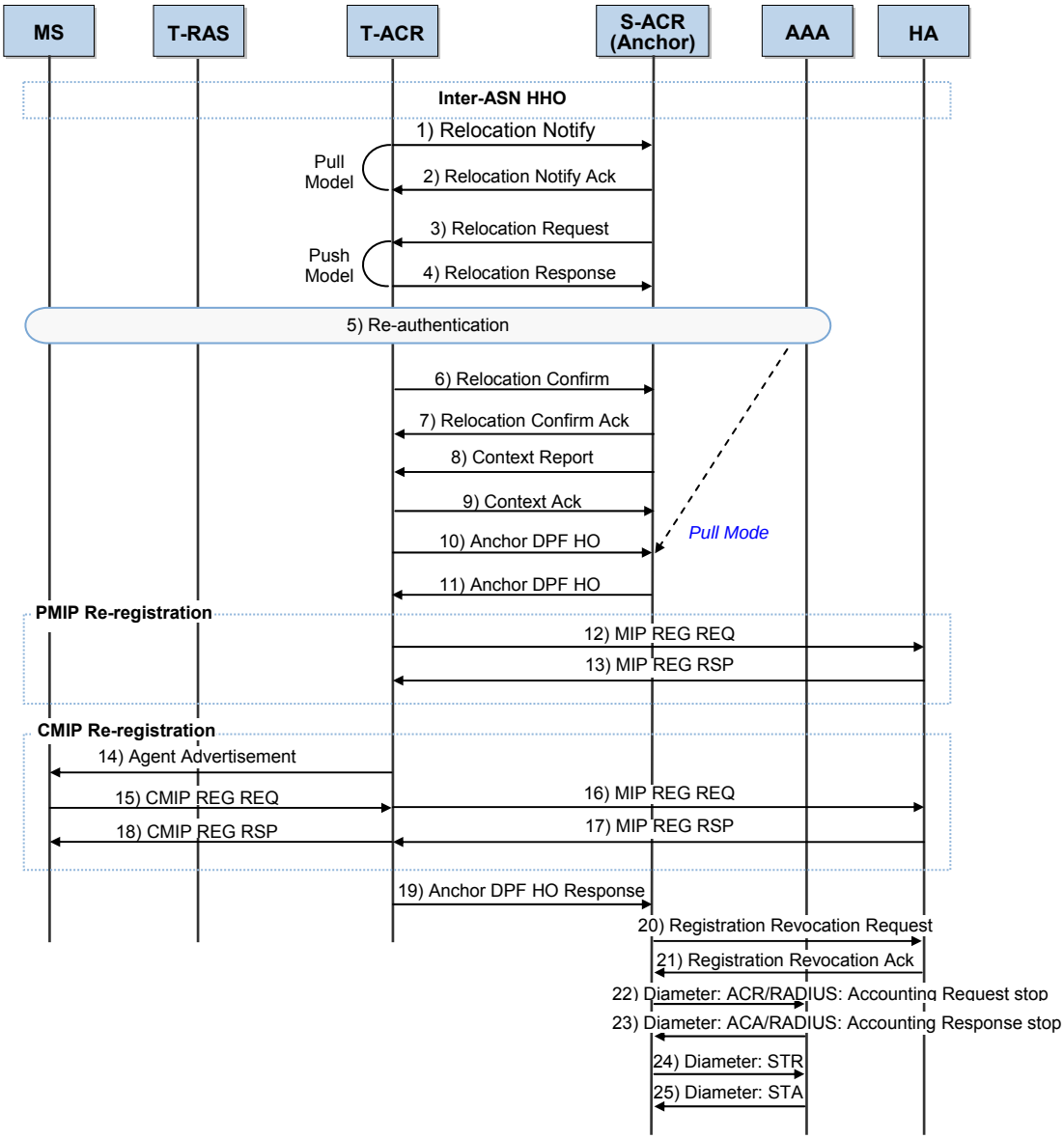

Figure 4.13 Inter-ASN Handover (CSN-Anchored Mobility)

Classification	Description
(1)~(7)	This is the procedure to relocate the Authenticator from the S-ACR to the T-ACR, the T-ACR triggers in order that the MS performs the EAP authentication procedure with the AAA server again. The T-ACR completes the Authenticator Relocation procedure by notifying the S-RAS of the authentication result.
(8)~(9)	S_ACR sends MS context information to T_ACR.
(10)~(19)	FA relocation and authenticator are triggered, and the registration of the PMIP or the CMIP is processed.
(20)~(21)	The S-ACR cancels the S-ACR registration of the MS in the HA.
(22)~(25)	The S-ACR, in interoperation with the AAA server, updates the final accounting information for the MS. If the Diameter is used as the AAA protocol, the S-ACR performs the session release procedure from the AAA server. However, when the RADIUS protocol is used, only the Accounting Request stop procedure and the Accounting Response stop procedure are processed and the STR/STA procedure is omitted.

© SAMSUNG Electronics Co., Ltd.

4.1.7 Access Termination

Access Termination (Awake Mode)

The following is the procedure that the access is terminated because the power of the Awake Mode MS is turned off.

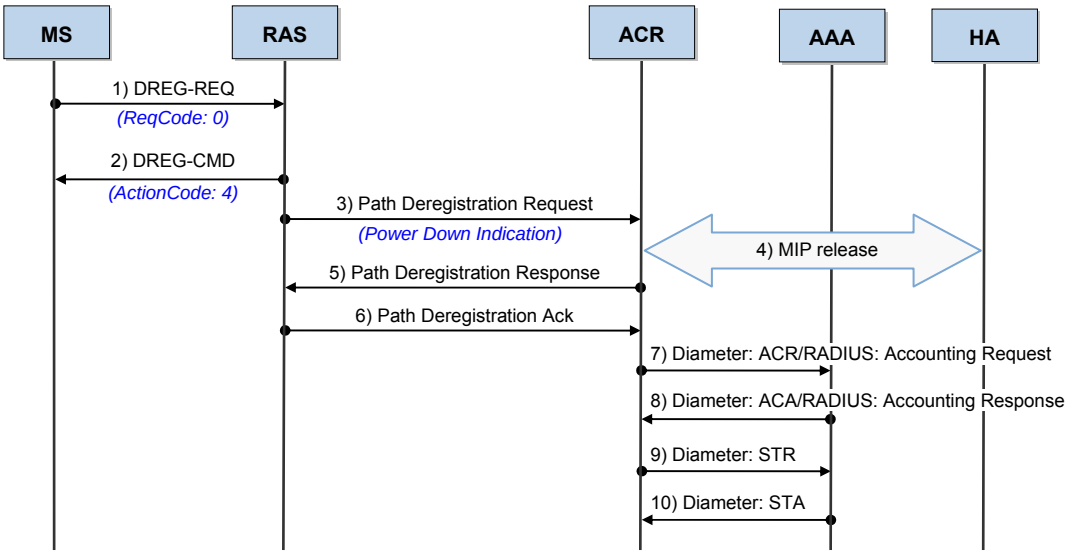

Figure 4.14 Access Termination (Awake Mode)

Classification	Description
(1)~(3)	If the power of the Awake Mode MS is turned off, the MS transmits the DREG-REQ message including 'Deregistration code=0' to the RAS, and the RAS notifies the ACR of this.
(4)	ACR release the MIP related information with HA.
(5)~(6)	The ACR notifies the RAS of the result of power down processing, and release the data path.
(7)~(10)	The S-ACR updates the information on interworking with the AAA server and the final accounting information of MS. Diameter is applied to AAA protocol, S-ACR performs the session termination procedure. However, when the RADIUS protocol is used, only the Accounting Request stop and Accounting Response stop operations are performed, and the STR/STA procedure is omitted.

Access Termination (Idle Mode)

The following is the procedure that the access is terminated because the power of the Idle Mode MS is turned off.

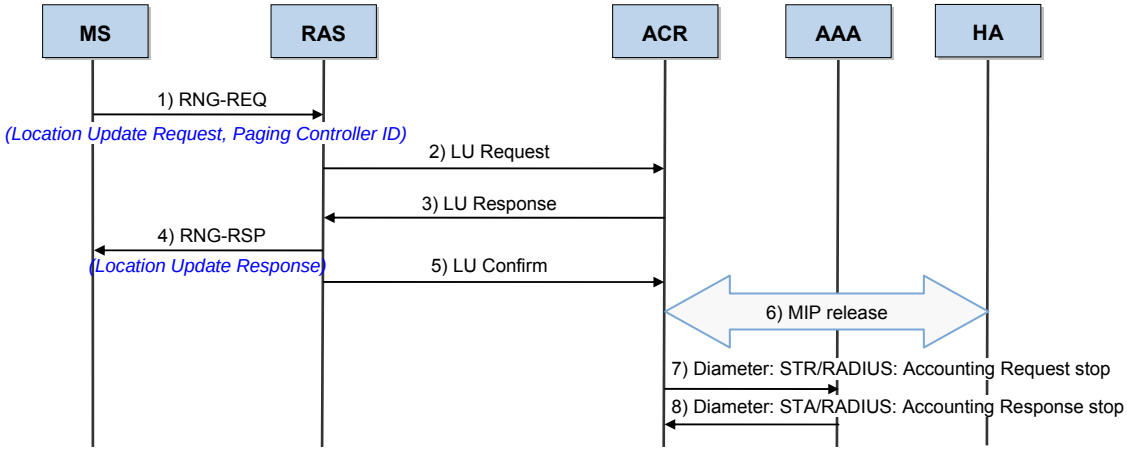

Figure 4.15 Access Termination (Idle Mode)

Classification	Description
(1)~(5)	If the power of the Idle Mode MS is turned off, the MS transmits the RNG-REQ message including the Power Down Indicator to the RAS, and the RAS notifies the ACR of this. The ACR deletes the information of the MS.
(6)	ACR release the MIP related information with HA.
(7)~(8)	Diameter is applied to AAA protocol, S-ACR performs the session termination procedure. However, when the RADIUS protocol is used, only the Accounting Request stop and Accounting Response stop operations are performed, instead of the STR/STA process.

© SAMSUNG Electronics Co., Ltd.

4.2 Network Synchronization Message Flow

The SPI-2213 uses GPS for the system synchronization. The UCCM of the MMA-G, which is the GPS reception module, creates the clock with the clock information received from a GPS and then distributes the clock to each hardware module in the SPI-2213.
Clock information required by the RRH is sent from the MRA-F through 'Digital I/Q and C & M', and the RRH recovers clock information from the signals to create necessary clocks.0

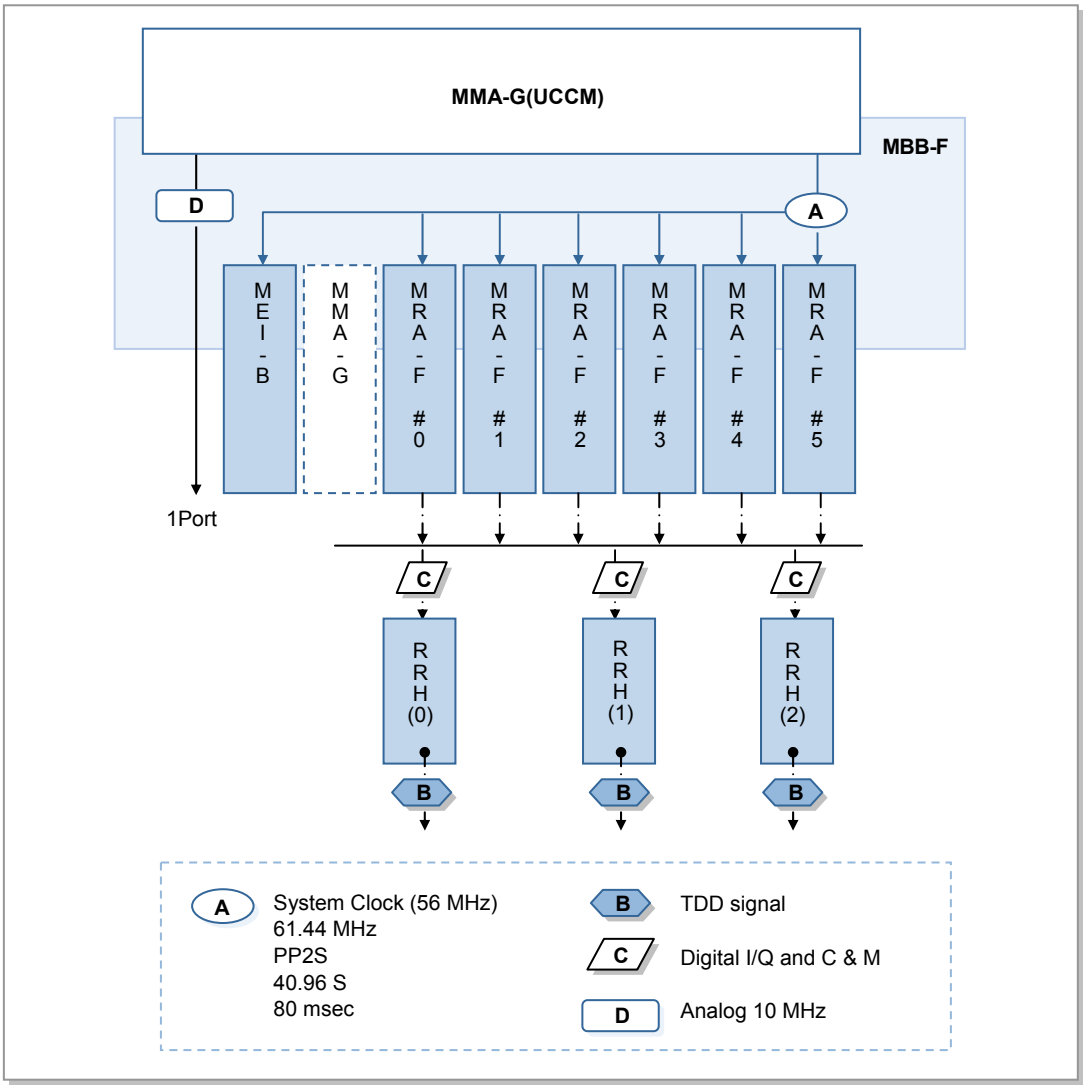

Figure 4.16 Network Synchronization Flow of SPI-2213

4.3 Alarm Signal Flow

The detection of failures in the SPI-2213 can be implemented by hardware interrupt or software polling method. The failures generated in the SPI-2213 are reported to the management system via the SNMP trap message.

Failure Alarm Types

- System Failure Alarms
  Time Sync Fail, Fan Fail, Temperature High, etc.
- Board Failure Alarms
  - Hardware Failure Alarms: FUNCTION FAIL, BOARD DELETION, etc.
  - Software Failure Alarms: COMMUNICATION FAIL, PORT DOWN, CPU OVERLOAD, etc.
- RRH Failure Alarms
  LOW GAIN, OVER POWER, VSWR FAIL, PLL UNLOCK, RRH INTERFACE FAIL etc.
- UDA
  6 alarm input ports are supported for the rectifier alarm. Main AC Fail, Rectifier Fail, Battery Fail, Cabinet Fan Fail, Heater Fail, Environment Alarm

Failure Report Message Flow

The main OAM (UFM) collects the failures detected from each board and UDA interface of the SPI-2213 and notifies them to the management system. At this time, it only reports the upper failure information by using the failure filtering function. If it receives the command to inhibit the report for a specific failure or all system failures from the management system, it does not report the failure report.
The flows for the failure detection and the report message are as shown in the figures below:

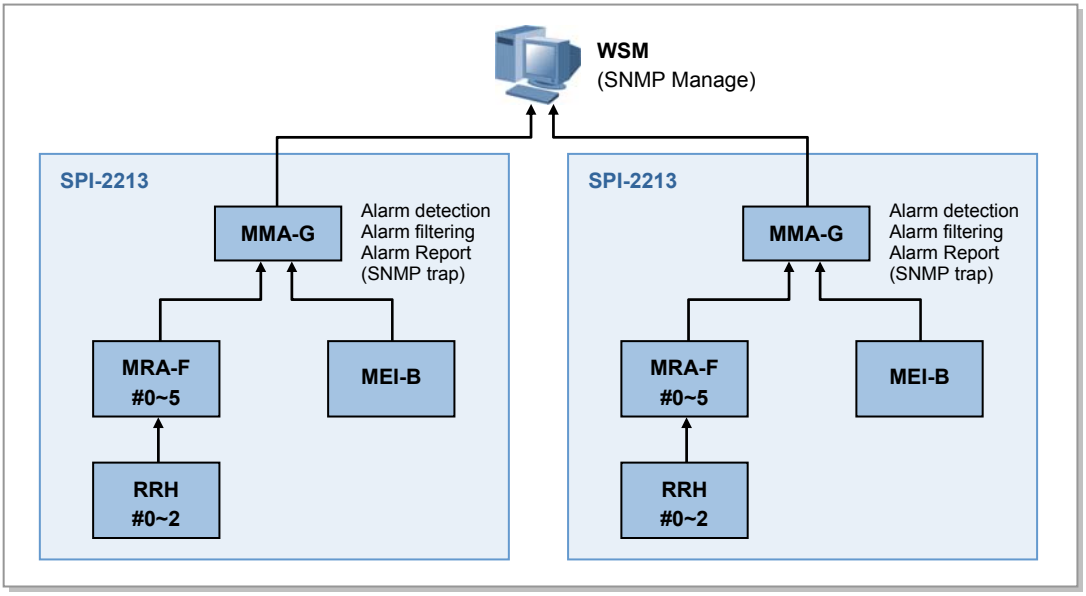

Figure 4.17 Alarm Signal Flow of SPI-2213

© SAMSUNG Electronics Co., Ltd.

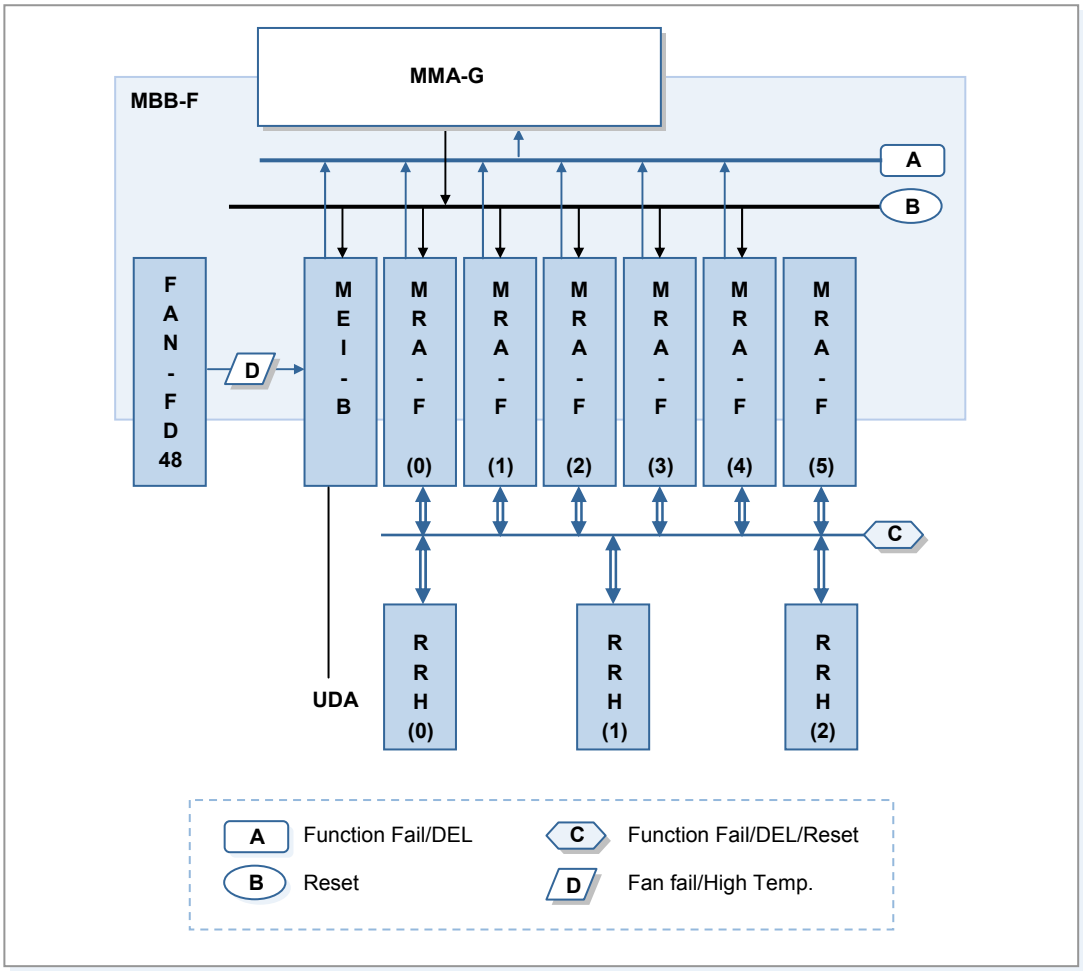

Figure 4.18 Alarm and Control Structure of SPI-2213

4.4 Loading Message Flow

Loading is the procedure to download the software execution files and the data from the IS, which are required to perform each function of each processor and each device of the SPI-2213. Loading the SPI-2213 is performed in the procedure of initializing the system.
In addition, if a specific board is mounted on the system or the hardware is reset, or if the operator of the upper management system reboots a specific board, loading is performed.

Loading is classified into two types, one is loading by using its own non-volatile storage and the other is loading by using the remote IS. When the system is initialized for the first time, the SPI-2213 receives the loading by using the remote IS, and after this, saves the corresponding information in the internal storage, and backs up the recent information periodically, and then it is available to avoid unnecessary loading. After the first initialization, if the information saved in its own storage is the recent information by comparing the version, the SPI-2213 does not receive the remote loading.

The loaded information includes the software image which is configured with the execution file and the script file, the configuration information, the PLD related to the operation parameter and various configuration files. Among them, all the information required for the static routing function of the SPI-2213 is saved in its own storage as the startup configure file format, and provides the information required at the time of the initialization.

Loading Procedure

To perform the loading procedure when initializing the SPI-2213, the loader performs the followings first. (Pre-loading)

- Boot-up
  The booter of the Flash ROM loads the kernel and the Root File System (RFS) from the flash ROM to the RAM Disk, and performs the kernel.
  The DPSA, which uses the Intel CPU, loads the kernel and the RFS from the Disk On Chip (DOC) to the RAM Disk via ROM BIOS booting and performs the kernel.
- IP configuration
  The IP address information is acquired from the flash ROM and is set to communicate with the first upper management system.
- Registration
  The NE is registered to the RS, and the IP address of the IS is acquired during the registration.
- Version Comparison
  The version of the software image and the version of the PLD saved in the remote IS and in the internal storage are compared, and the location where to perform loading is determined from that.
- File List Download
  The list of the files to be loaded is downloaded for each board.

© SAMSUNG Electronics Co., Ltd.

Loading Message Flow

After performing the pre-loading procedure, if the method of loading is determined, the Main OAM (ULM) of the MMA-G which performs the operation and the maintenance of the entire SPI-2213 performs loading by using the FTP/SFTP to the corresponding IS (remote ID or its own storage). Then, the Main OAM (ULM) becomes the internal image server for the lower board and performs the loading procedure.
The information on the software loaded in the SPI-2213 can be checked in the upper management system.

The loading message flow is as the following figure:

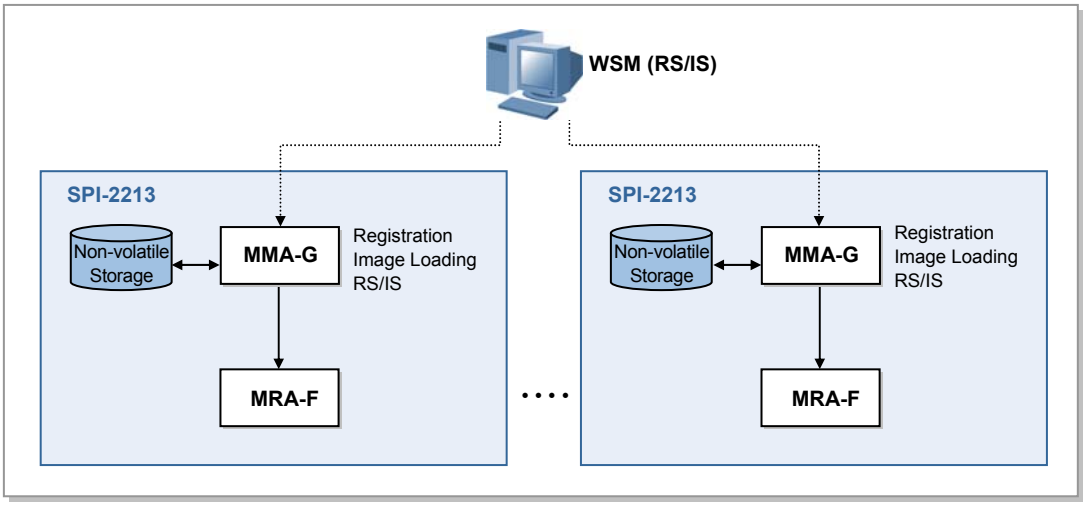

Figure 4.19 Loading Message Flow

4.5 Operation and Maintenance Message Flow

An operator can check and change the status of the SPI-2213 by means of the management system. To this end, the SPI-2213 provides the SNMP agent function. The function enables the WSM operator to perform the operation and maintenance function of the SPI-2213 at remote site by using the SNMP.
In addition, the operator can perform Web-EMT based maintenance function by using a Web browser in a console terminal or IMISH based maintenance function by using the SSH connection. However, grow/degrow, paging information change and neighbor list change functions are only available on WSM.

The statistical information provided by the SPI-2213 are provided to the operator according to collection period and the real-time monitoring function for a specific statistical item specified by the operator is, also, provided.

Operation and Maintenance Message Flow

The operation and maintenance of the SPI-2213 is carried out via the SNMP get/get_next/get_bulk/set/trap message between the SNMP agent on the main OAM and the SNMP manager of the WSM. The SPI-2213 deals with various operation and maintenance messages received from the SNMP manager of the management system, transfers the results and reports the events, such as failure generation or status change, in real time as applicable. The statistical information is provided as statistical file format in unit of BI and the collection period can be specified as one of 15, 30 and 60 minutes.

The OAM signal flow is as shown in the figure below:

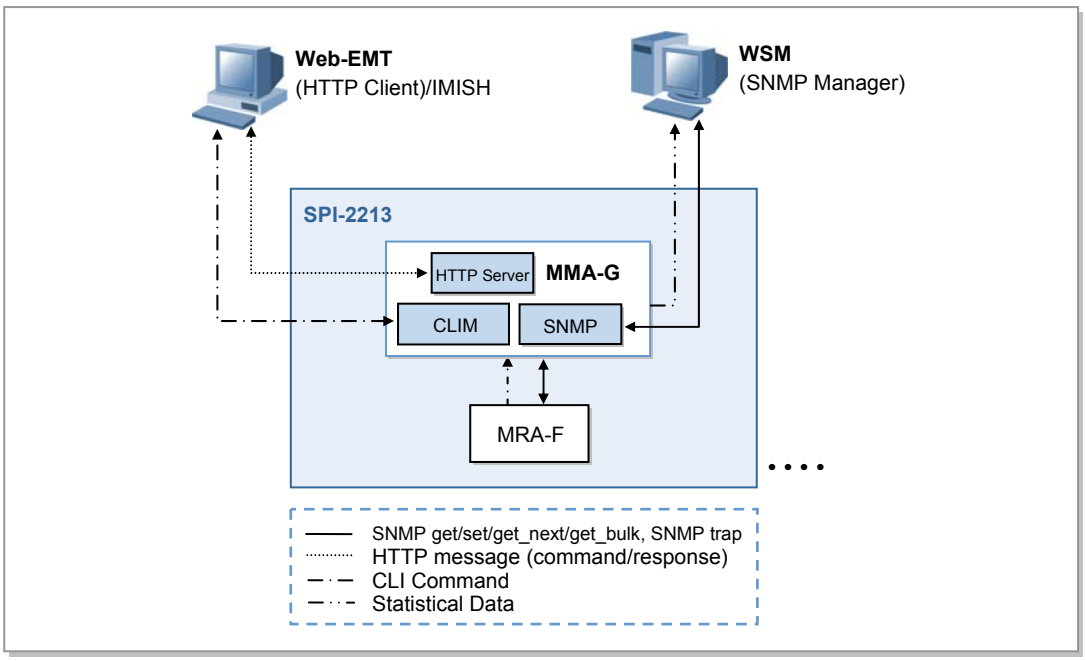

Figure 4.20 Operation and Maintenance Signal Flow

© SAMSUNG Electronics Co., Ltd.

CHAPTER 5. Additional Functions and Tools

5.1 RET

The SPI-2213 can support the RET function by connecting an antenna with an AISG 2.0 interface and an RRH with an AISG 2.0 interface.

To provide the RET function, the SPI-2213 sends and receives control messages to and from the WSM through the RET controller within the RRH (AISG2.0 interface), MRA-F (Digital I/Q and C & M: Optic) and RET controller of MMA-G. By using this path, the WSM can carry out the RET function that controls the antenna tilting angle remotely.
In addition, for the RET operation, the RRH provides power to every antenna connected to it.

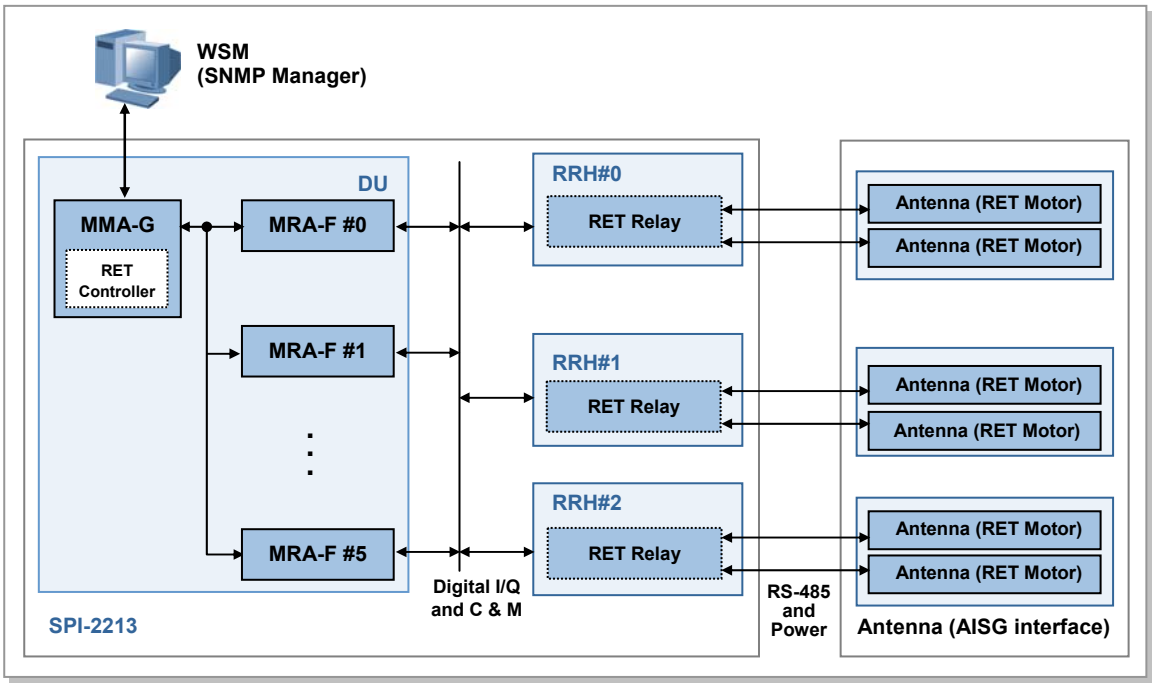

Figure 5.1 RET Interface

5.2 Web-EMT

The Web-EMT is a type of GUI-based consol terminals and the tool to access the SPI-2213 directly, monitor the device status and perform operation and maintenance.
An operator can execute the Web-EMT only with Internet Explorer and the installation of additional software is not necessary. In addition, GUI is provided in HTTPs protocol type internally.

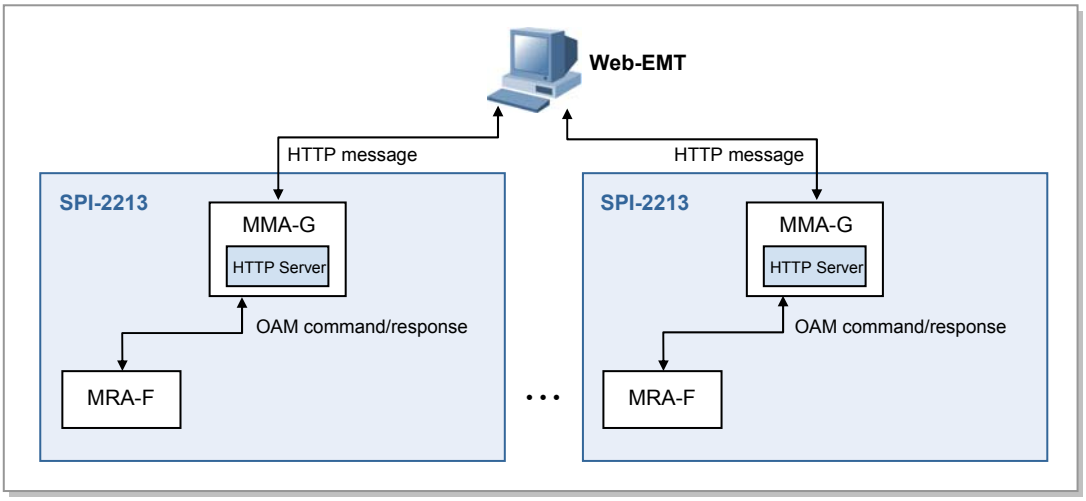

Figure 5.2 Web-EMT Interface

The Web-EMT enables the operator to restart the SPI-2213 or internal boards, inquire/set configuration and operation parameters, carry out status and failure monitoring and perform the diagnosis function. However, the functions for resource grow/degrow or the changes of the operation information concerned with neighbor list are only available on the WSM managing the entire network and the loading image.

© SAMSUNG Electronics Co., Ltd.

ABBREVIATION

A

AAA	Authentication, Authorization, and Accounting
ACR	Access Control Router
ADC	Analog to Digital Conversion
AGC	Automatic Gain Control
AISG	Antenna Interface Standards Group
AMC	Adaptive Modulation and Coding
API	Application Programming Interface
ARQ	Automatic Repeat request
ASN	Access Service Network

B

BI	Bucket Interval
BP	Board Processor

C

C & M	Control & Management
CAC	Call Admission Control
CC	Call Control
CID	Connection Identifier
CLEI	Common Language Equipment Identifier
CLIM	Command Line Interface Management
CLLI	Common Language Location Identifier
CMIP	Client Mobile IP
CoS	Class of Service
CSN	Connectivity Service Network
CTC	Convolutional Turbo Code

D

DAM	Diameter AAA Management
DCD	Downlink Channel Descriptor
DD	Device Driver
DHCP	Dynamic Host Configuration Protocol
DL	Downlink
DL-MAP	Downlink-MAP

© SAMSUNG Electronics Co., Ltd.

DMB	Digital Main Block
DPM-FI	DC Power Module-Flexible Indoor
DST	Daylight Saving Time

E

E/O	Electrical to Optic
EAP	Extensible Authentication Protocol
EMI	Electro-Magnetic Interference
EMI	EMS Interface
EMS	Element Management System

F

FA	Foreign Agent
FA	Frequency Allocation
FAN-FD48	FAN-Flexible Digital unit -48 VDC
FE	Fast Ethernet
FEC	Forward Error Correction
FFT	Fast Fourier Transform
FRP	Frequency Reuse Pattern

G

GBIC	Gigabit Interface Converter
GE	Gigabit Ethernet
GPS	Global Positioning System
GPSR	GPS Receiver
GRE	Generic Routing Encryption
GUI	Graphical User Interface

H

HA	Home Agent
H-ARQ	Hybrid-Automatic Repeat request
HO	Handover
HTTPs	Hypertext Transfer Protocol over SSL

I

IEEE	Institute of Electrical and Electronics Engineers
IMISH	Integrated Management Interface Shell
IP	Internet Protocol
IPRS	IP Routing Software
IS	Image Server

© SAMSUNG Electronics Co., Ltd.

M

MAC	Medium Access Control
MBB-F	Mobile WiMAX base station Backplane Board-Flexible
MEI-B	Mobile WiMAX base station External Interface board assembly-Basic
MIMO	Multiple Input Multiple Output
MIP	Mobile IP
MLPPP	Multi Link Point to Point Protocol
MMA-G	Mobile WiMAX base station Main control board Assembly-General
MRA-F	Mobile WiMAX base station RAS board Assembly-Flexible
MS	Mobile Station
MW	Middleware

N

NE	Network Element
NP	Network Processor
NPS	Network Processor Software
NWG	Network Working Group

O

O/E	Optic to Electrical
OAGS	Common SNMP Agent Subagent
OAM	Operation And Maintenance
OCM	Common Configuration Management
OER	Common Event Router
OFDMA	Orthogonal Frequency Division Multiple Access
OPM	Common Performance Management
OS	Operating System
OSSM	Common Subscription Service Management

P

PBA	Panel Board Assembly
PCB	Printed Circuit Board
PCRF	Policy & Charging Rules Function
PDU	Protocol Data Unit
PF	Proportional Fair
PGID	Paging Cycle, Paging Offset
PHY	Physical Layer
PLD	Programmable Loading Data
PMIP	Proxy Mobile IP
PP2S	Pulse Per 2 Seconds
PPP	Point to Point Protocol

© SAMSUNG Electronics Co., Ltd.

Q

QAM	Quadrature Amplifier Modulation
QCS	Quick Connection Setup
QoS	Quality of Service

R

RAS	Radio Access Station
RDM	RAS Diagnosis Management
RFS	Root File System
ROHC	Robust Header Compression
RRC	RAS Resource Controller
RRH	Mobile WiMAX base station Remote Radio Head
RS	Registration Server
RSC	RAS Service Controller
RSSI	Received Signal Strength Indicator
RTC	RAS Traffic Controller

S

SAE	System Architecture Evolution
SBC	Subscriber Station Basic Capacity
SDU	Service Data Unit
SFF	Small Form Factor Fixed
SFP	Small Form Factor Pluggable
SFTP	Secure File Transfer Protocol
SMFS-F-C	Samsung Mobile WiMAX U-RAS Flexible Shelf assembly-Center mount
SMFS-F-F	Samsung Mobile WiMAX U-RAS Flexible Shelf assembly-Front mount
SNMP	Simple Network Management Protocol
SNMPD	SNMP Daemon
SSH	Secure Shell
SSL	Secure Sockets Layer

T

TCA	Threshold Cross Alert
TDD	Time Division Duplex

U

UCCM	Universal Core Clock Module
UCD	Uplink Channel Descriptor
UDA	User Defined Alarm
UDE	User Define Ethernet
UDP	User Datagram Protocol
UFM	Common Fault Management
UL	Uplink
UL-MAP	Uplink-MAP
ULM	Universal Loading Management

© SAMSUNG Electronics Co., Ltd.

V

VIF	Virtual Interface
VLAN	Virtual Local Area Network

W

Web-EMT	Web-based Element Maintenance Terminal
WLAN	Wireless Local Area Network
WSM	Mobile WiMAX System Manager

This page is intentionally left blank.

© SAMSUNG Electronics Co., Ltd.

INDEX

A

AAA server 1-5
Access Termination 4-19
ACR 1-5, 2-16
Alarm 3-5, 4-22
Altitude 2-12
ARQ 2-7
ASN-GW 1-2
Authentication 2-10, 4-4
Awake Mode 4-7, 4-19

B

Backboard 3-5
BI 4-26
Board OAM 3-20
Boot-up 4-24
BS 1-2

C

CAC 2-7
Call processing 2-6, 4-1
Call Trace 2-10
Capacity 2-11
CC
- overview 3-16, 3-17
- structure 3-17

Channel Bandwidth 2-11
Channel Card 2-11
CID 2-6
CLIM 3-24
Clock 3-5, 4-21
Collaborative SM 2-6
Console Terminal 2-9
Contention Based Bandwidth Request 2-4
Cooling Structure 3-13
CSM 2-3

D

Decoding 2-4
Demodulation 2-4
Device Driver 3-15
DL/UL MAP 2-5
DMB 3-4
DPM-FI 3-11
DU
- configuration 3-1
- cooling structure 3-13
- external interface 3-14
- overview 2-2

Dual Stack 2-8

E

EMI 3-20
Encoding 2-4
Environmental Alarm 2-13
Environmental Condition 2-12
Ethernet CoS 2-9
Ethernet interface 2-18, 3-5

F

FAN-FD48 3-13
FFT 2-11
FRP 2-3

G

GPSR 2-13

H

HA 1-5
Handover
  message flow 4-15
  overview 1-7, 2-6
H-ARQ 2-5
Holdover 3-6
Humidity Condition 2-12

I

Idle Mode 2-6, 4-7, 4-20
IMISH 2-10
Initial Access 4-1
Input Power 2-11
Input Voltage 2-11
Interface 2-16
IP QoS 2-8
IP Routing 2-8
IPRS 3-16
IS 4-24

L

Link aggregation 2-18
Loader 3-27
Loading 4-24, 4-25
Location update 4-10
Loopback Test 2-3

M

MAC ARQ 2-7
Main OAM 3-20
Matrix A 2-5
Matrix B 2-5
MBB-F 3-5
MEI-B
  detailed information 3-7
  overview 3-5
Middleware 3-15
MIMO 2-5, 3-5
  external interface 3-14
MMA-G
  detailed information 3-6
  overview 3-5
Mobile communication 1-1
Mobile WiMAX
  network 1-4
  standard 1-2
  system function 1-6
Modulation 2-4
MRA-F
  detailed information 3-7
  overview 3-5
MS 2-16

N

NAT 2-8
Network Synchronization 4-21
Noise 2-12
NPS 3-16

O

OAGS 3-22
OAM
  interface 3-20
  overview 3-16, 3-19
  structure 3-19

© SAMSUNG Electronics Co., Ltd.

OCM 3-33
OER 3-32
OEV 3-32
OFDMA..... 2-2, 2-4, 3-5
Operation and Maintenance 4-26
OPM..... 3-30
OS..... 3-15
OSSM 3-31
Output 2-11

P

Paging..... 4-14
PAM 3-25
PCRF server 1-5
Power Control 2-5, 2-11
Power Structure 3-12
Pre-loading 3-27, 4-24
Protocol Stack..... 2-17

Q

QAM symbol 2-5
QCS 4-9
QoS.....2-7, 2-8

R

R1 interface 2-17
R6 interface 2-17
Ranging 2-4
RAS 1-4
RDM..... 3-34
Remote Firmware Downloading ... 2-3
RET..... 5-1
RF Band..... 2-11
RF Specification..... 2-13
RRC 3-17
RRH
alarm 4-22
configuration 3-2
cooling structure 3-13
main function 3-7
network configuration 3-9
overview 2-2
RRH-1
external interface 3-14
network configuration 3-9, 3-10
RRH-2
overview 3-8
RSC 3-17, 3-18
RTC 3-17, 3-18

S

Sleep Mode
status 2-6, 4-8
SM 2-3, 2-5
SMFS-F 2-14
SNMP agent 4-26
SNMP manager 4-26
SNMPD..... 3-21
Software Upgrade..... 2-10
SPI-2213
configuration 2-14, 2-15
interface..... 2-16, 3-14
internal configuration 3-3
introduction 2-1
software 3-15
Status Change 4-7
STC.....2-3, 2-5
Subchannelization 2-5

T

Temperature Condition 2-12

U

UCCM 3-6, 4-21
UDA 3-5
UDE 3-5
UFM 3-26
ULM 3-28
Uplink Timing Synchronization 2-4

V

Vibration.....2-12
VLAN.....2-9

W

Web-EMT..... 2-10, 3-6, 5-2
WebEMT.....3-23
WLAN 1-1
WSM 1-5, 2-16, 4-26

© SAMSUNG Electronics Co., Ltd.

⚠	Warning: Exposure to Radio Frequency Radiation The radiated output power of this device is far below the FCC radio frequency exposure limits. Nevertheless, the device should be used in such a manner that the potential for human contact during normal operation is minimized. In order to avoid the possibility of exceeding the FCC radio frequency exposure limits, human proximity to the antenna should not be less than 150cm during normal operation. The gain of the antenna is 17 dBi. The antenna(s) used for this transmitter must not be co-located or operating in conjunction with any other antenna or transmitter.

ⓒ **SAMSUNG Electronics Co., Ltd.**

Mobile WiMAX RAS SPI-2213

System Description

©2009 Samsung Electronics Co., Ltd.

All rights reserved.

Information in this manual is proprietary to SAMSUNG Electronics Co., Ltd.

No information contained here may be copied, translated, transcribed or duplicated by any form without the prior written consent of SAMSUNG.

Information in this manual is subject to change without notice.

SAMSUNG ELECTRONICS