Visual board Block Diagram

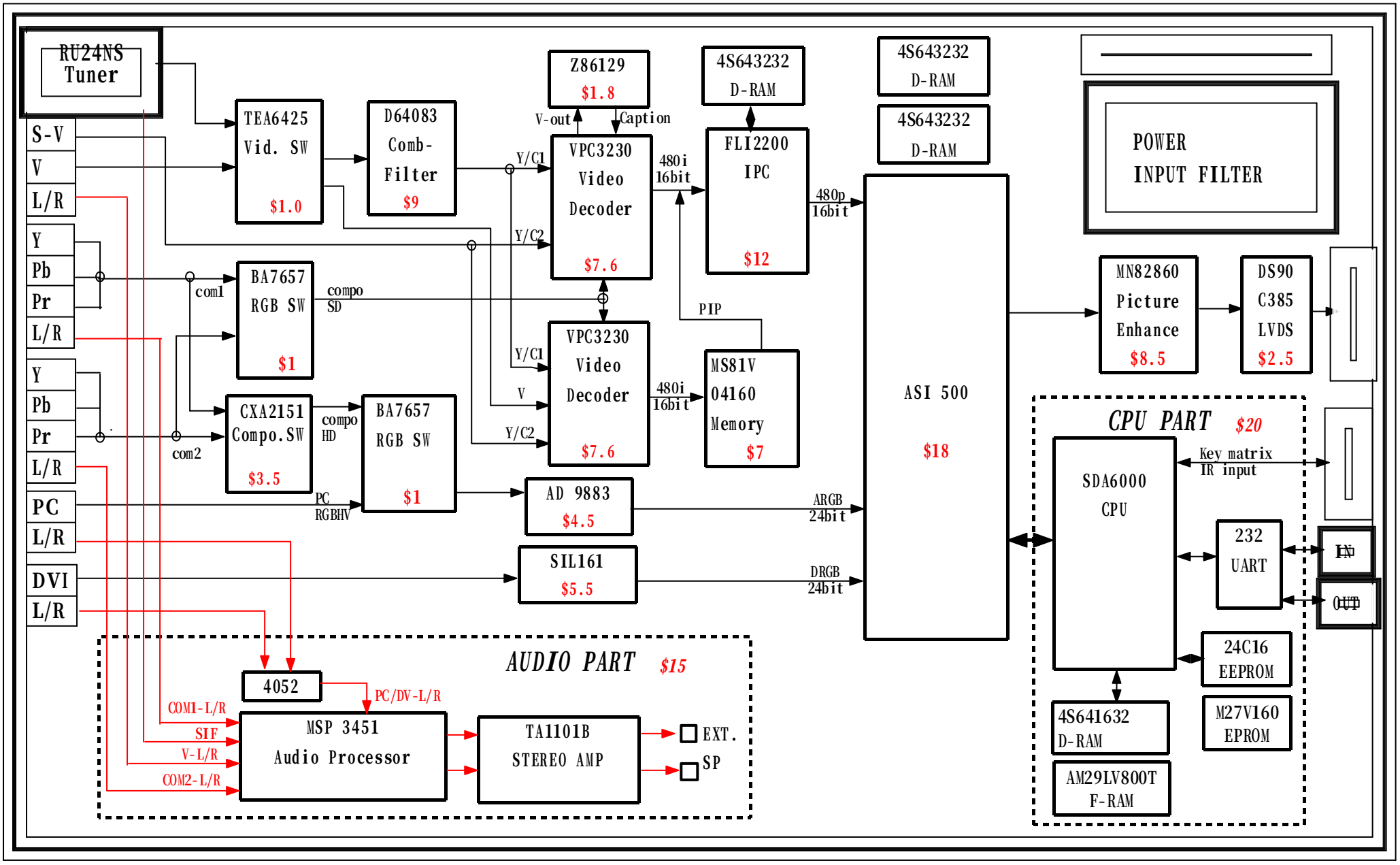

Digital board Clock diagram

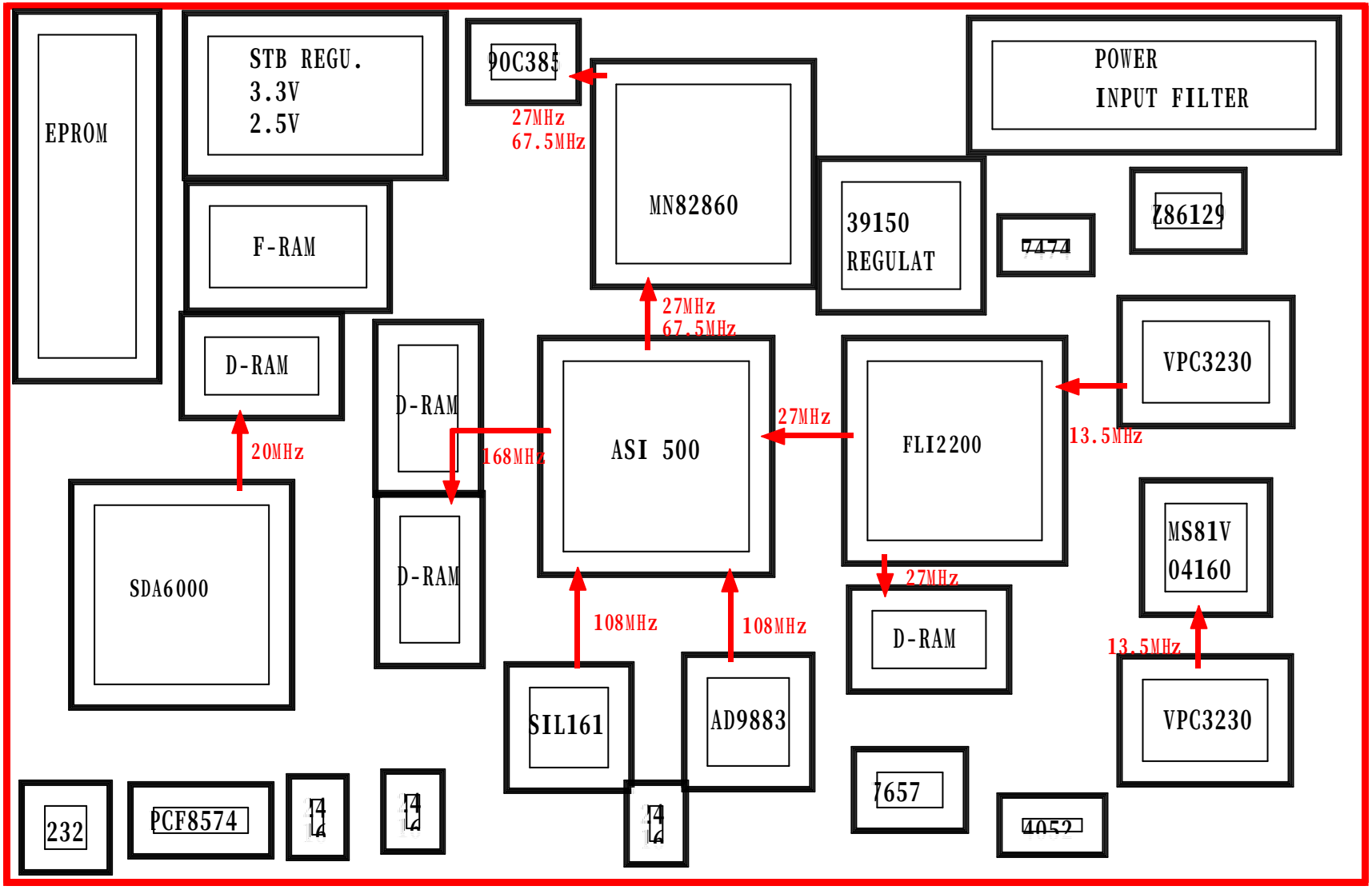
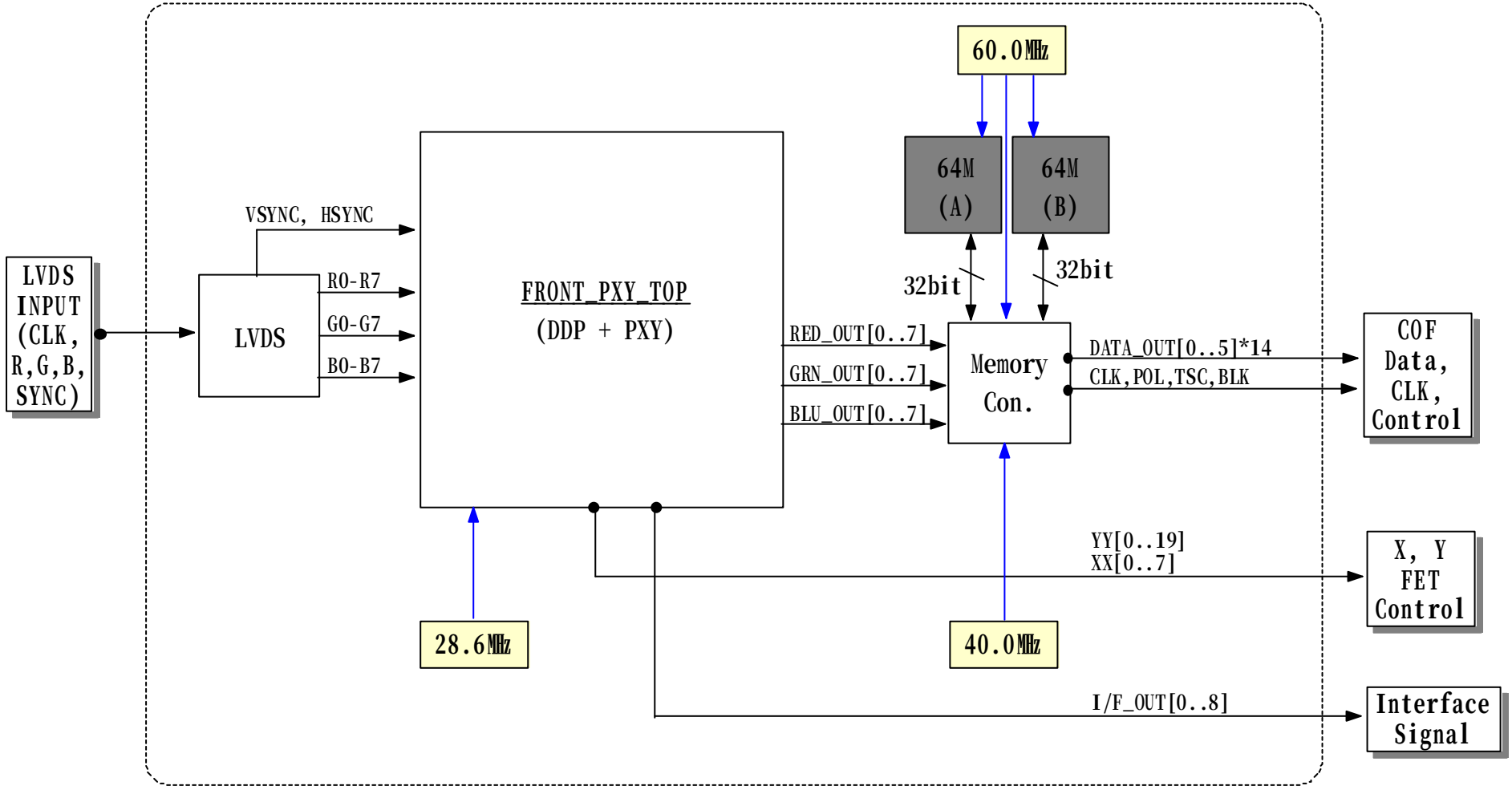
2-1. LOGIC BOARD Block Diagram(:I/O, :Internal Signal, :LOGIC, :Memory)