CD-R/RW DRIVE

SW-248B

SERVICE Manual

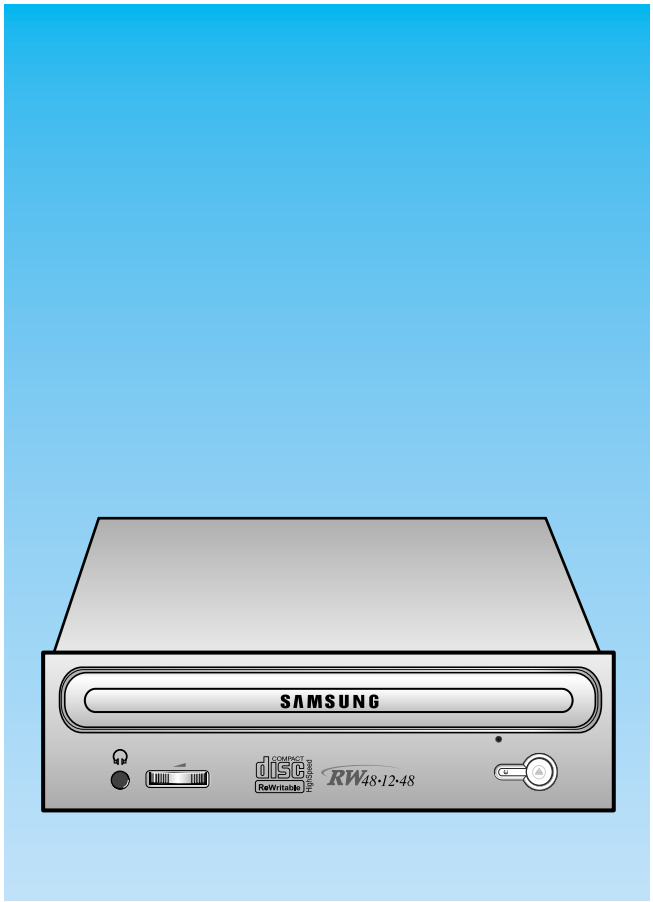

CONTENTS

- Specifications
- Cautions at Service
- External Part Name
- Necessary equipments and Specifications in needing Service(P/U replacement)
- Exploded Views & Part List
- Packing Options
- Block Diagram
- Troubleshooting
- Circuit Diagram
- Main Components Block Diagram & Pin Descriptions
- Electrical Parts List

The design and part of this product is subject to change without prior notice for performance improvement.

●Specifications

1. General Specifications

- Drive type : Computer built-in
- Power consumption : DC +5V, 1.5A
  DC +12V, 1.5A
- Dimensions : 146mm (W)X42mm (H)X184mm (L)
- Net Weight : 750g

2. Electrical Features

- Interface : ATAPI BUS(IDE)
- Data transfer rate :

Write(CD-R) : 600KBytes/Sec(4X)
1,200KBytes/Sec(8X)
1,800KBytes/Sec(12X)
2,400KBytes/Sec(16X)
3,000KBytes/Sec(20X)
3,600KBytes/Sec(24X)
4,200KBytes/Sec(28X)
4,800KBytes/Sec(32X)

Write(CD-RW) : 600KBytes/Sec(4X)

Write(High Speed CD-RW) : 600KBytes/Sec(4X)
1,500KBytes/Sec(10X)

Resd(MAX) : 2,000~6,000KBytes/Sec(CAV 40X)

- Access time : 110ms (Random. TYPICAL)
- Buffer Capacity : 8Mbyte
- Error ratio : Mode 1: Below 10^{-12}
  Mode 2: Below 10^{-9}
- Frequency response : 20Hz~20kHz (Lineout)
  100Hz~20kHz (H/P out)
- Signal to noise ratio : 70dB(1kHz, Lineout)
- Distortion factor : 0.15% Less than(1KHz)
- Channel separation : 65dB(1kHz, Lineout)
  55dB(1kHz, H/P out)
- Used laser : Semiconductor laser
- Audio Output : Line out 0.75 ±20%(Vrms), 47KΩ
  H/P out 0.65 ±20%(Vrms), 33Ω

●Cautions at Service

1. General Items

1) Be careful not to have your eyes or a part of body touch with-laser diode at repair because this product uses laser diode.
2) Do not disassemble Pick-up at repair. If the laser diode is bad, replace the entire Pick-up.
3) Keep away from TV or other electrical units at repair to prevent influence from surrounding units.
4) If you replace the parts during repair, be sure to unplug the power cable before replacement.
5) If you insert a disc into the drive, be sure to load it corectly.
6) Because this unit can't be used by itself, surely mount it on PC (586 DMA support) and check the operations in use of private device driver floppy diskette.
   Refer to Instruction manual.
7) This unit has many parts with features related to safety and especially, for essential parts, the importance is indicated on circuit diagram and part list.
   Be certain to use the parts with same specifications at replaing these parts.

2. Earthing cautions at handling Pick-up

- Because the laser diode in optical Pick-up is subject to get out of order due to the potential difference occurring by electricity load charged in clothes or bodies, observe the following earthing items at handling.

1) Body earthing(hand) : Be sure to wear a wrist strip with one side earthed.(Impedance : Below 104).
   It removes the electricity formed in body.
2) Work table earthing : Put the earthed conductive plate (Impedance : Below 104) such as copper plate on work table.
3) Cautions for clothes : Do not have any clothes touch with Pick-up because the electricity formed in clothes is destroyed easily.

● Electricity sensing device

Some semiconductor units may be damaged easily by electricity.
These elements are called as electricity sensing device(ESD) in general. For example, integrated circuit, field effect transister, semiconductor chip.
The following methods have to be used to reduce the accident of element damage generated by electricity.

1) Emit all electric charges in your body through contact with earthing materail at once before handling a semiconductor factor or device including it.
   In other way, make use of commercial wristlet against electricity
   It shall be detached before power impression to the unit on testing because of shock.
2) After detaching an electrical device including ESD, it shall be placed on conductive surface such as aluminium to prevent the charge acummulation and unit exposure.
3) Utilize only the soldering iron with earthed end for ESD soldering or release
4) Make use of only anti-static soldering release unit.
   A soldering release unit not to be classified as antistatic may generate the enough charge to damage ESD unit.
5) Never use a Freon-propelling chemical product.
   It may generate the enough charge to damage ESD.
6) Untill installing ESD unit for replacement, never it from protection package.
   (Most of ESD unit for replacement have lead composed of package shorted electrically by conductive foam, aluminium or similar conductive material.)
7) Contact with shassis including ESD or protection material in circuit parts just before detaching the protection material from lead of ESD unit for replacement

Note : Be sure to avoid the power impression to the shassis or circuit and observe the safety instruction.

8) Minimize the body action at handling an unpacked ESD unit for replacement.
   (Otherwise, an unconscious action, so to speak, friction between clothes or foot lifting from carpet floor may generate the enough charge to damage ESD unit.)

● Safety instructions

1) Read all safety and operational manuals before operating this product
2) Keep the safety and operational manuals for future reference.
3) Observe all precations and operational instructions in or on the surface of this product.
4) Follow all operation and maintenance cautions.
5) Be sure to plug off the power cable before cleaning. Use a dry cloth to clean a dusty cover of cabinet instead of liquid or aersol cleaner.
6) Never use a attachment not to be recommended by this company. It may result in danger and damage.
7) Never use this product around water such as bathtub, washbasin, laundry machine, swimming pool or lakeside.
8) Never place this product on bed, sofa or around radiator and heater.
9) Power : Utilize the only power displayed on lebel
   If the power type can't be checked, call to dealer or Korea Electricity, Co, Ltd. Refer tooperate this product by battery or other power.
10) Lightning : Plug off the power cable for product protection during thunder and lightning flashes or this product is unused for a long time.
11) Overload : Be careful that the wall outlet and expanded cord is overloaded due to danger of fire and electrical shock.
12) Never insert a substance or liquid into this product. It may cause fire or shorck by contact with voltage point or short.
13) Part replacement : The service engineer has to use the parts of same specification at replacement. Otherwire, fire, shock or other dangers may be occurred.
14) Safety check : Be sure to perform the safety check at service or repair completion

Importance : This product includes special impotrant parts on safety.
These parts are indicated by on schematic diagram.
At replacement of these parts, use the parts of same specification due to shock, fire or other dangers.
Never transform the original design without permission of this company.

● External Part Name

1. Front

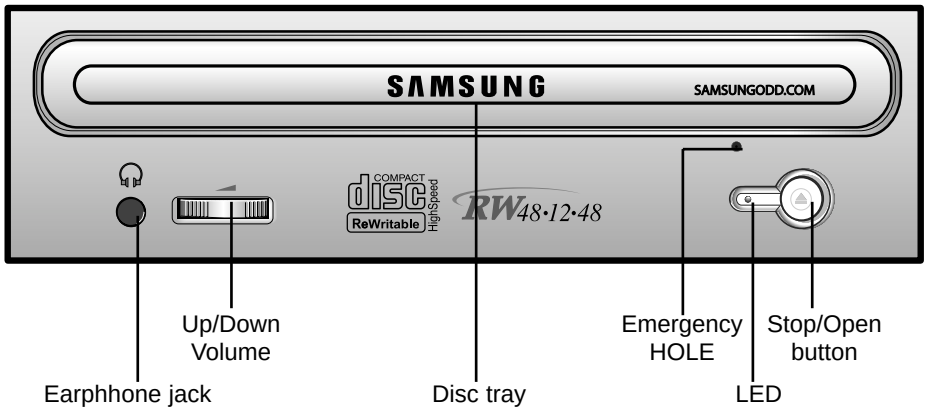

2. Rear

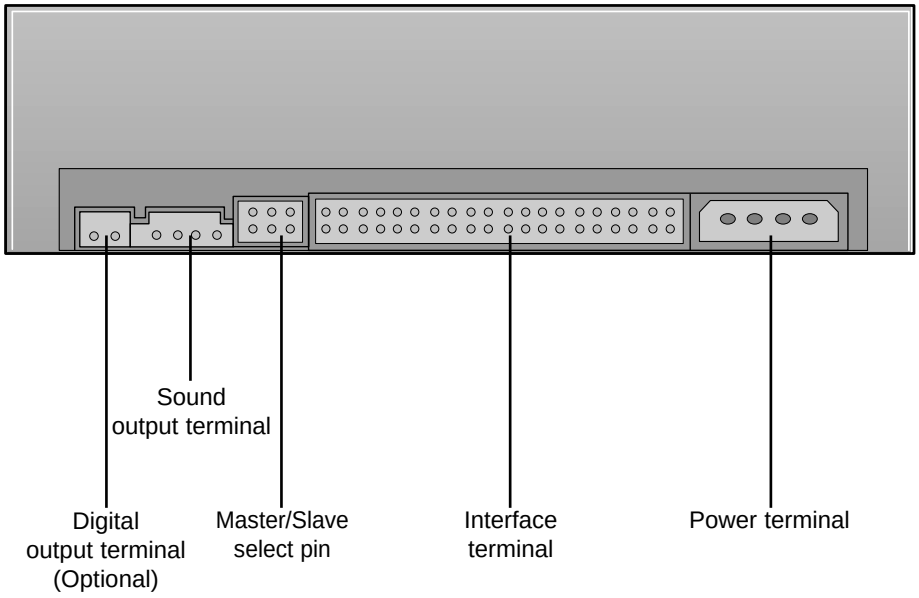

● Disassembly Diagram

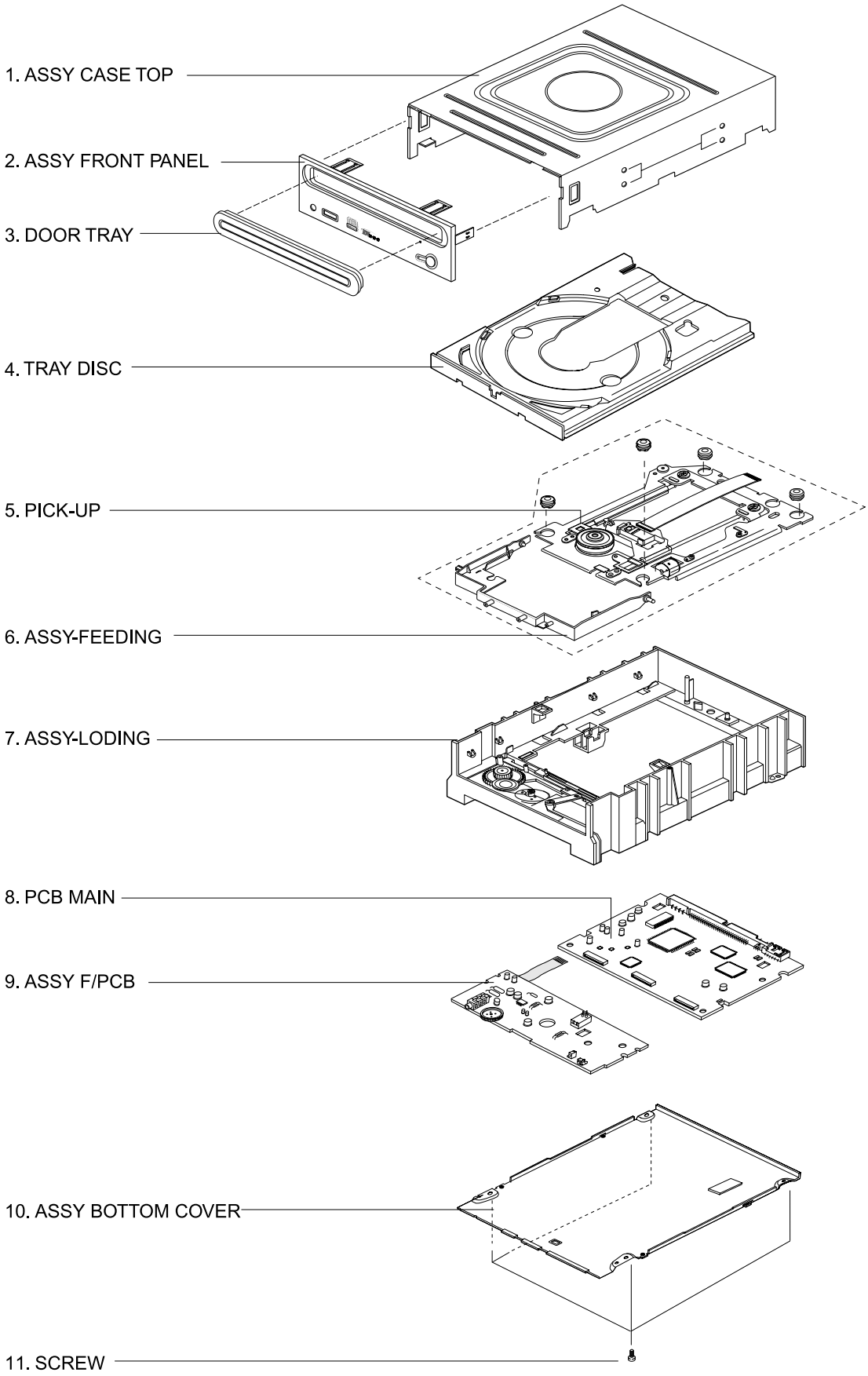

● Device Part List

PART NAME	CODE No		SPECFICATION
ASSY DECK	BG97-02248A		-
LOADING	BG60-00009A	1.SCREW	TITE M1.7*5(10)
	BG97-02250A	1.ASSY LOADING	-
	BG61-00203A	1.MAIN FRAME	HIPS(HG1760S)
	BG66-00061A	2.GEAR TRAY	POM(F20-03)
	BG66-00032A	3.GEAR PULLEY	POM(F20-03)
	BG66-00044A	4.BELT PULLEY	CR-70(BLK 1.3t)
	BG97-00789A	5.ASSY LOADING M/T	-
	BG31-00027A	- LOADING MOTOR	RF-300CH-11440 ¿Ü
	BG66-00033A	- PULLEY MOTOR	POM(F20-03)
	BG66-00034A	6.LEVER EJECT	POM(F20-03)
	BG66-00062A	7.SLIDE CAM	KOCETAL(K700)
TRAY DISC FEEDING	BG66-00060A	1.TRAY DISC	ABS (SR-0320D)
	BG97-02251A	1.ASSY FEEDING	-
	BG61-00078A	1.SUB CHASSIS	ABS(GF20%)
	BG73-00012A	2.RUBBER-INSULATOR	BUTHYL 25Hs
	BG73-00027A	3.RUBBER-INSULATOR	BUTHYL 25Hs
	BG61-00238A	4.MAIN BASE M	SECC+POM
	BG61-00237A	- MAIN BASE P	SECC 2.0T
	BG31-00025A	5.ASSY STEP M/T	“SPS-15RF-054K, P4.5mm”
	BG61-00180A	6.GUIDE PU	POM(NW-02)
	BG61-00122A	7.SHAFT PU R	“SUS420J2,¥õ3.0,L85.5mm”
	BG31-00036A	8.MOTOR SPINDLE	“RSM-2615A,DMBSPC75A”
	-	FFC-SPM	15 PIN
	BG97-02247A	9. ASSY TURN TABLE	-
	BG59-00017A	TURN TABLE ABS	ADC12
	BG63-00084A	COVER T/T ABS	SN PLATE T0.6
	BG59-00018A	TURN TABLE BALL	“STEEL ¥Õ2.5,11EA”
	BG73-00026A	RUBBER-T/T ABS	CR(NEO-B-6150)
	BG59-00019A	MAGNET	T1.5
	BG61-00018A	BRKT-T/T	SECC T1.0
	BG30-00025A	10.PICK-UP	SW-232B
	BG41-00184A	11.EFFC PU	“32 PIN (P0.5),88mm”
	BG97-01729A	12.ASSY SLIDER STEP	-
	BG66-00052A	- SLIDE STEP	POM(NW-02)
	BG61-00225A	- SPRING STEP	SUS 304-WPB
	BG61-20031A	13.HOLDER CAM	POM(M90-44)
	AH60-10145A	14.SCREW	TITE M1.7*5(5.5)
	AC60-10074A	15.SCREW	TITE M2.6*6
	6001-001348	16.SCREW	M1.7*3.5
	6003-001260	17.SCREW	TITE M1.7*4.0*3.5
	BG69-00127A	18.PAD-DECK	PORON LE-20 2T
	BG73-00022A	19.RUBBER-DVA	SILICON 25µµ
	BG61-00178A	20.PLA-VIB/ABSORBER	SECC 2T
ETC	3409-001138	-.SWITCH DETECTOR	
	BG63-00052A	-.SHEET PU	PVC FILM 0.85T
	BG41-00182A	-.FFC MAIN	13 PIN
	-	-.OIL	EP-100
	-	-.GREASE	KG-110
	-	-.GREASE	G-754

● Disassembly and assembly

Exterior and PCB disassembly

Door-tray

1) Supply power to open the tray¶Êin direction of arrow “A”
2) Lift up the door¶Â in direction of arrow “B”
3) Close the tray¶Êand power off.

Reference : If the tray¶Êdoesn't open, push the clip3 into specified hole shown in detailed figure to open it compulsorily.

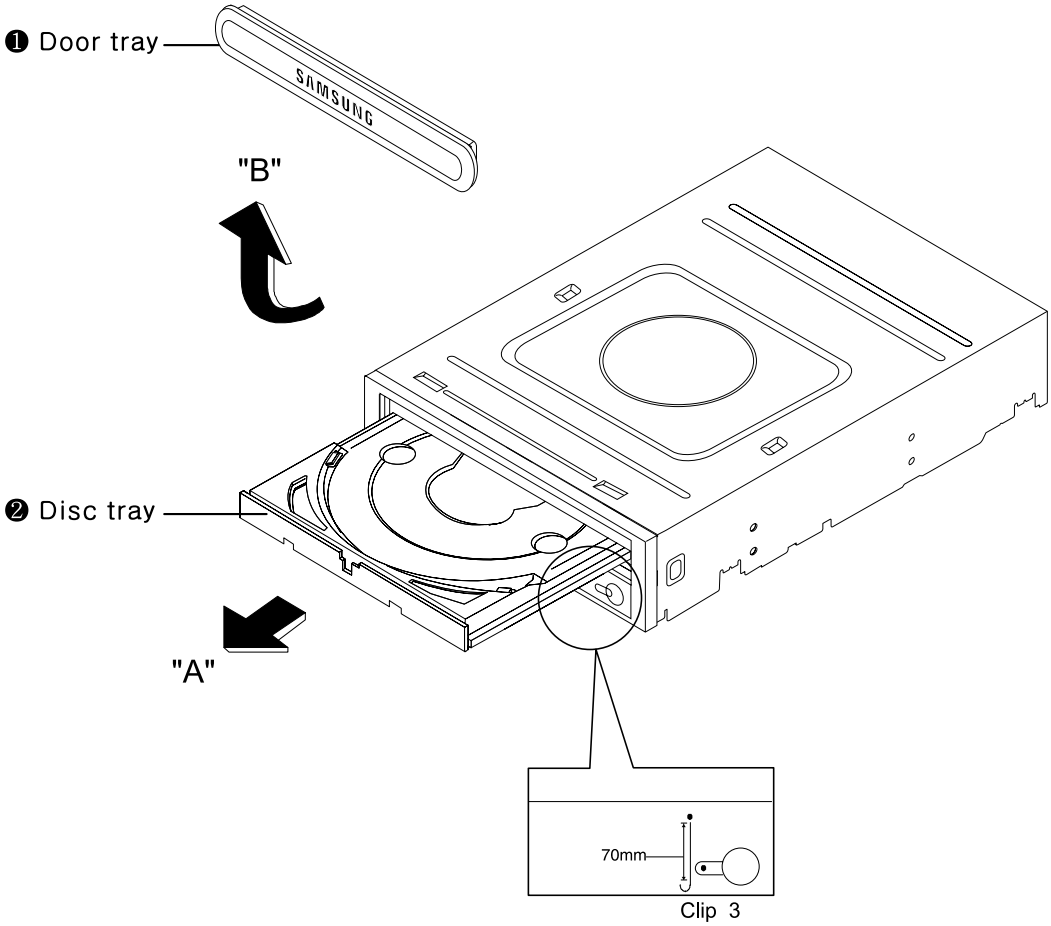

Figure - Door-tray

● Disassembly and assembly

Exterior and PCB disassembly

Panel-front

1) Remove 6 hooks¶Â
2) Take out the panel-front¶Êforward.

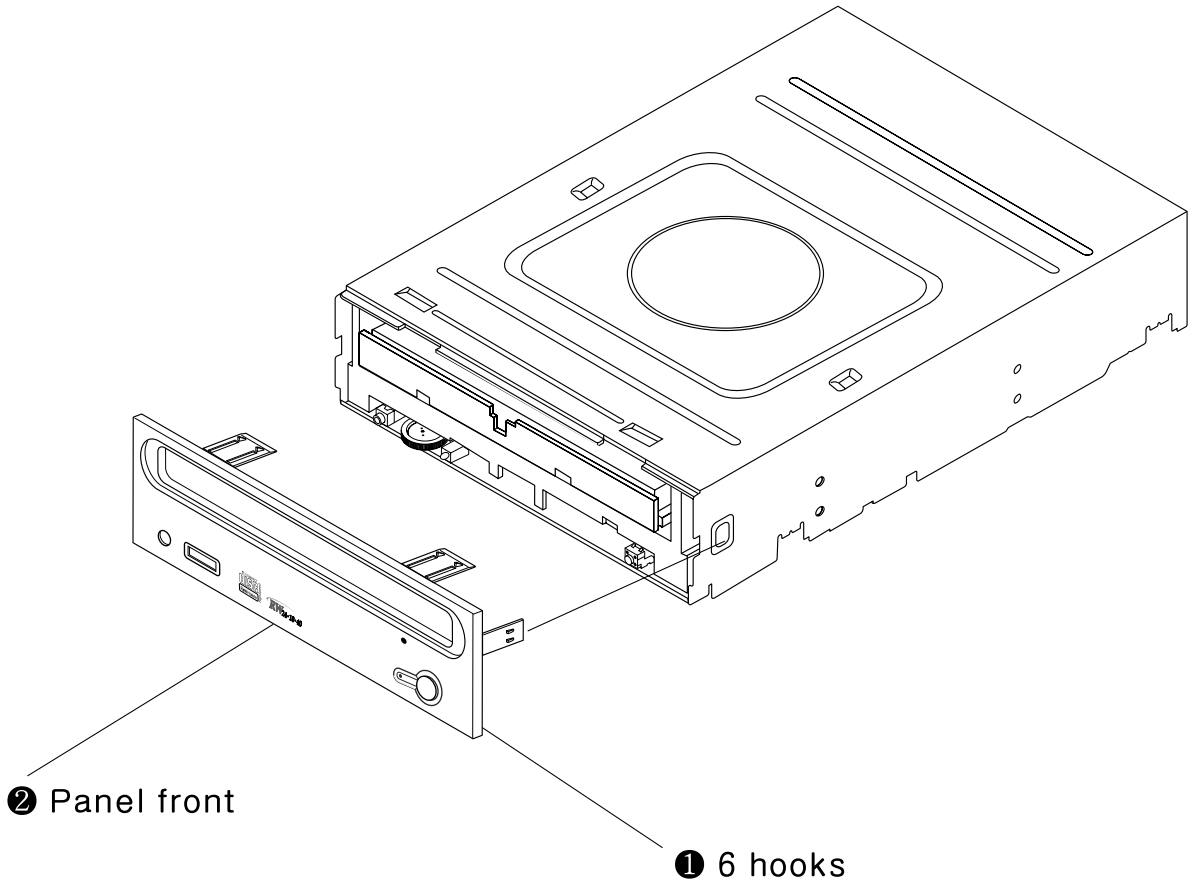

Figure - Panel-front

● Disassembly and assembly

Exterior and PCB disassembly

Top-cabinet

1) Remove 4screws¶Â in the bottom
2) Lift up the top-cabinet ¶Ê

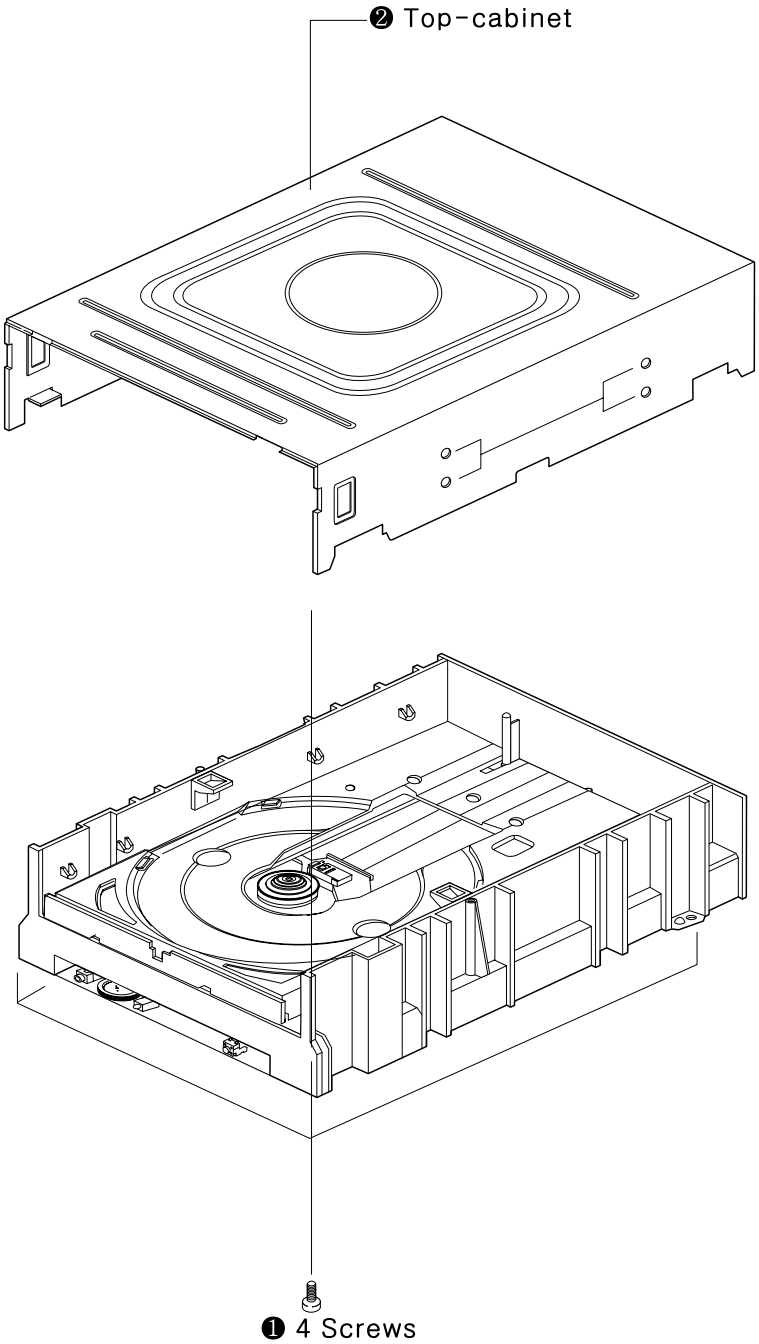

Figure - Top-cabinet

● Disassembly and assembly

Exterior and PCB disassembly

Ass'y-frame Low

1) Lift up the ass’y frame¶Ê low

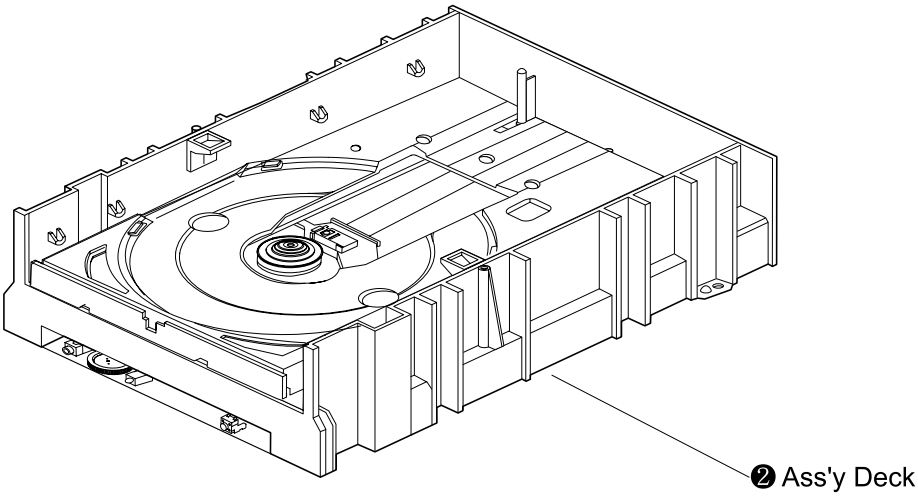

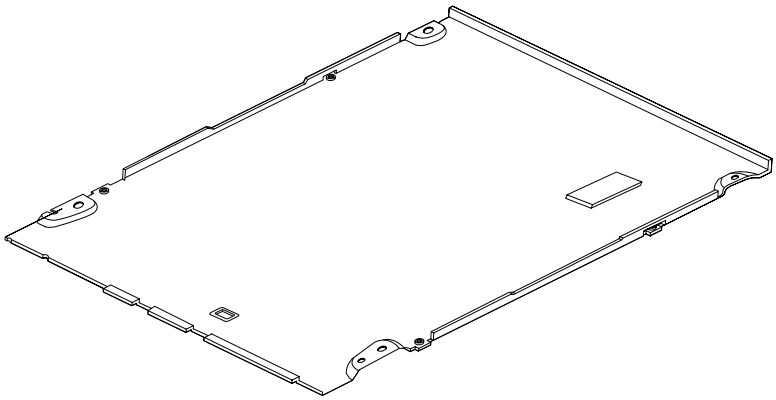

Figure - Ass'y-frame Low

● Disassembly and assembly

Exterior and PCB disassembly

MAIN-PCB

1) Disassemble the PICK-UP FPC¶Â in PCB.
2) Disassemble the FFC¶Êbetween Main PCB and Front PCB.
3) Disassemble the FFC¶Ábetween Main PCB and Front PCB.
4) Push 2hooks¶Ëfor PCB fixing in deck.
5) Disassemble the MAIN-PCB¶È
6) Remove soldering at motor connection wire¶ÍPCB.
7) Press 2hooks¶Îfor PCB fixing in deck and Disassemble the FRONT-PCB

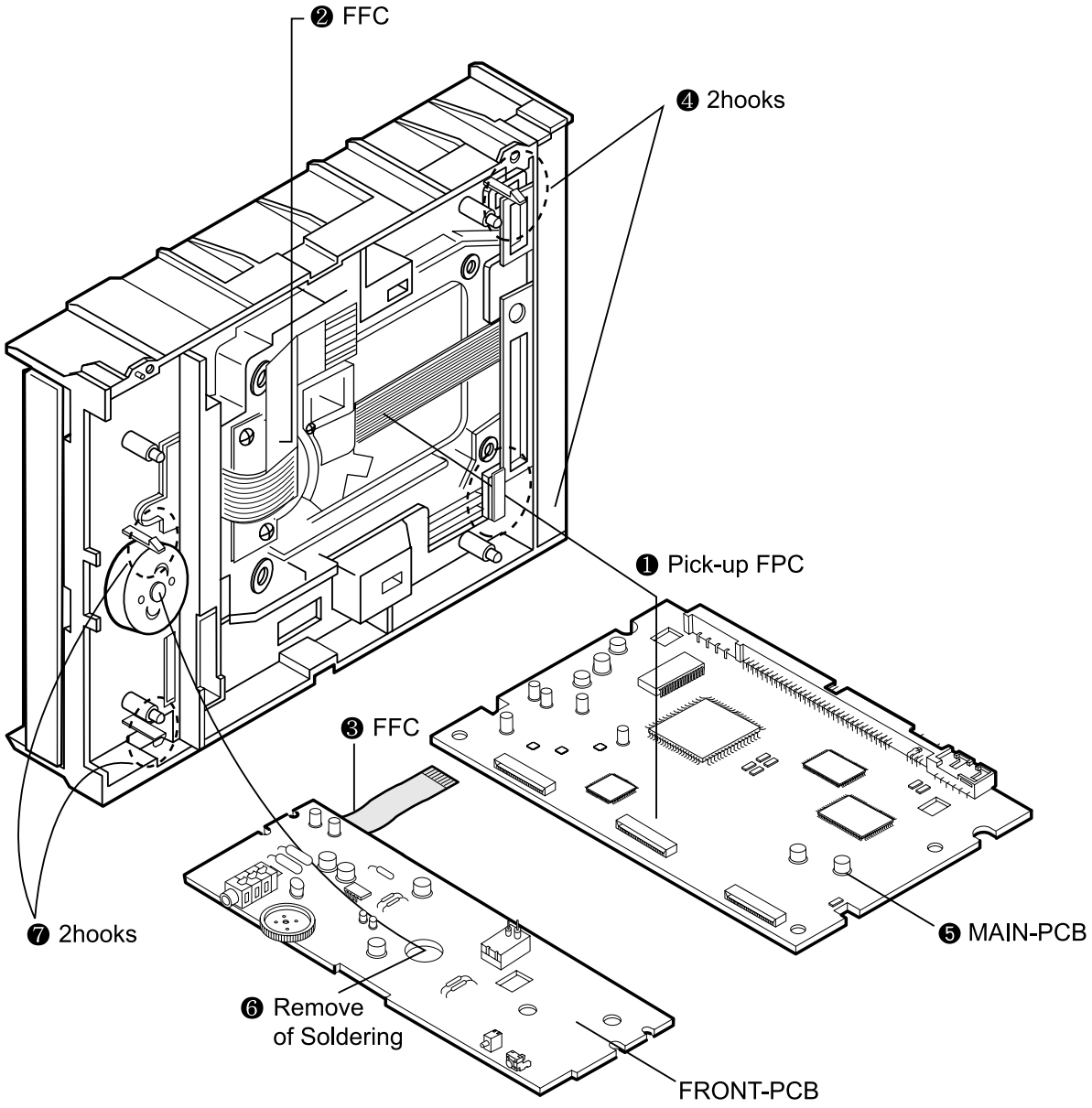

Figure - Disassembly connector

● Disassembly and assembly

Deck disassembly

Tray

1) Push 2hooks¶Â.

2) Take out the Tray¶Êin direction of arrow.

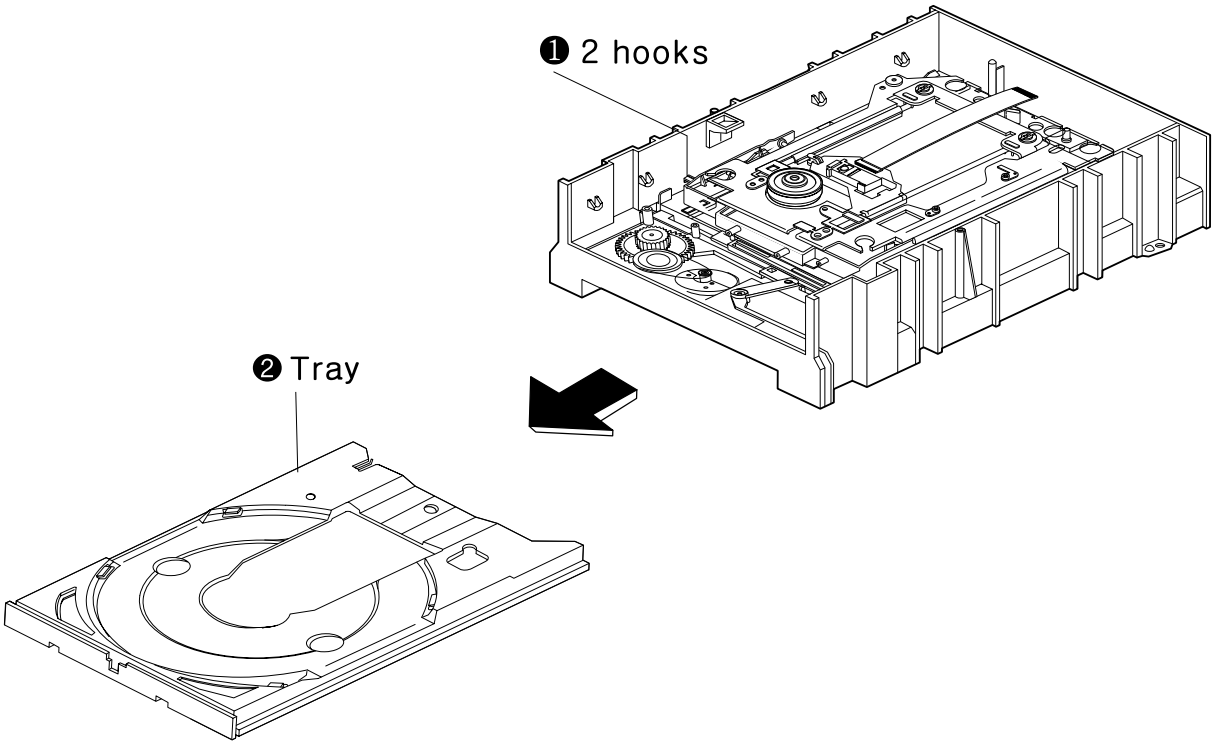

Figure - Tray

● Disassembly and assembly

Deck disassembly

Ass'y-Deck

1) Move the slide cam¶Â in left direction.
2) Remove screws¶Ê.
3) Disassemble the Ass'y-feeding ¶Áin arrow "B" direction with pushing the 2hooks in direction of arrow "A"

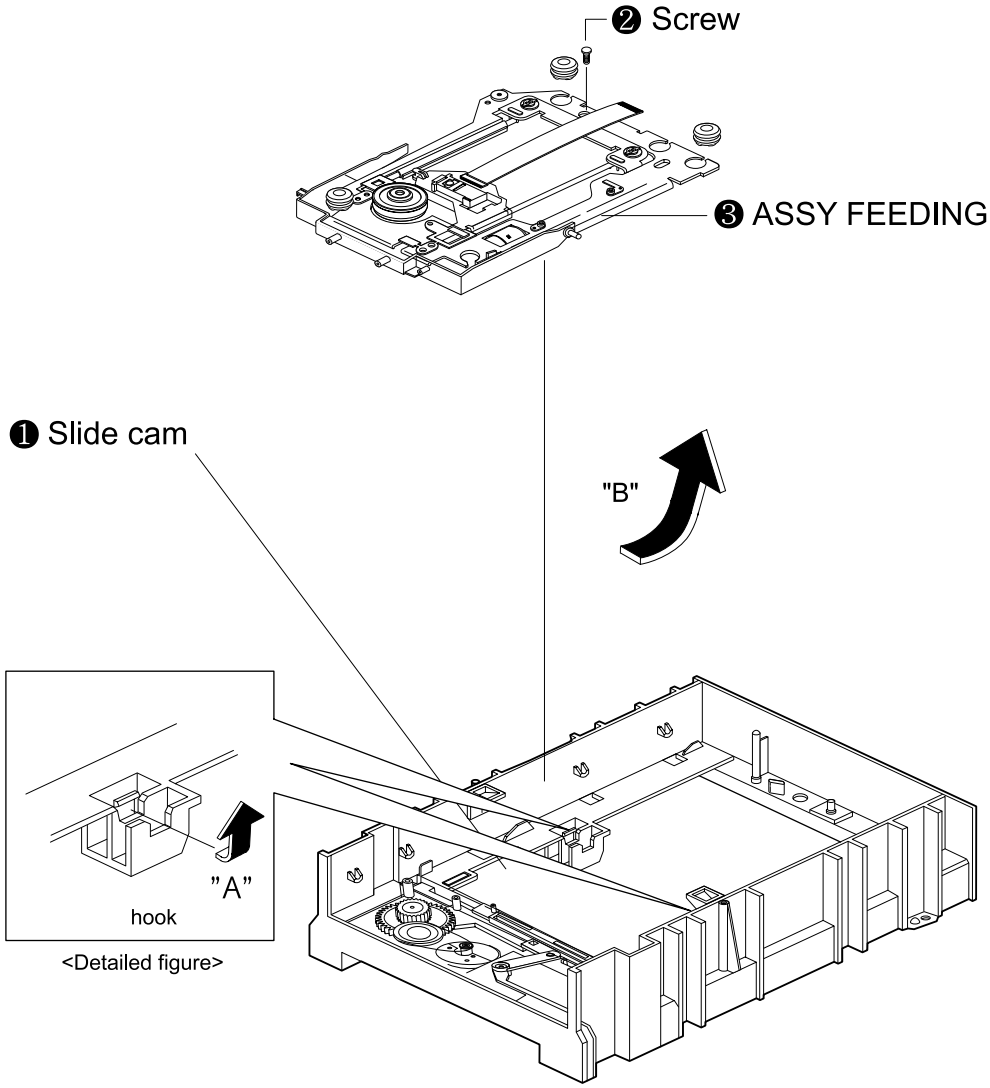

Figure - Ass'y-Deck

●Packing Diagram and Part List

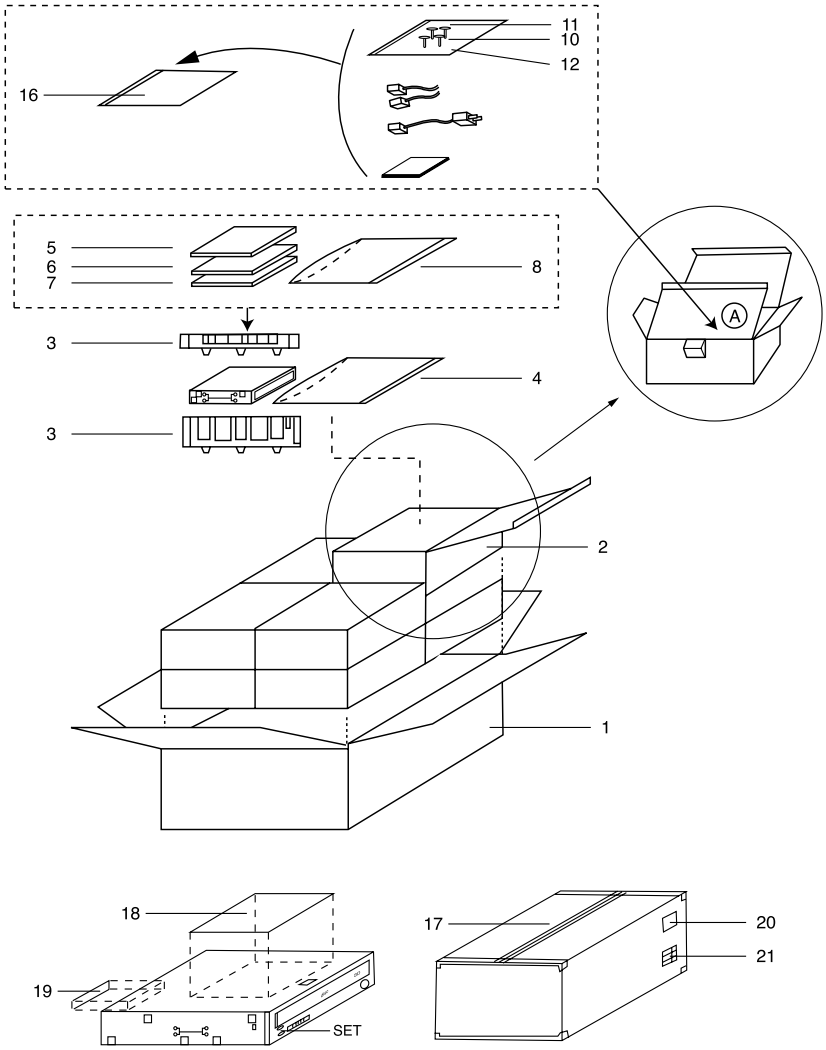

NO		CODE-NO	DESCRIPTION	SPECIFICATION	Q'TY
1		BG69-00146A	MASTER CATON-BOX	DM 3	1/8EA
2		BG69-00147A	PACKING-CASE SW-224B/DOM	SW-1 MANILA 240g	1EA
3		BG69-00034A	CUSHION-SET	EPS	2EA
4		BG69-30305A	BAG-PE	T0.05	2EA
5		BG46-00024A	S-W UTILITY		1EA
6		BG68-00352A	MANUAL USERS		1EA
7		BG95-50004A	ASSY-SCREW		1EA
8	ASS'Y	BG60-12001H	SCREW-MACHINE	M3 * 6	1EA
9		BG39-30002A	BAG-PE		1EA
10		BG39-00010A	CABLE-IF	SR 380MM	1EA
11		BG39-42001B	CABLE-WIRE HARNESS	4P, 3P, N, UL2547/UL 1061	4EA
12		BG69-30307A	BAG-PE	T0.05	1EA
13		0203-001222	TAPE-MASKING	PP-BEING	0.34M
14		BG68-00355A	LABEL-RATING	SW-224B/DOM, ART PAPER	1EA
15		BG68-50005A	LABEL-QMS	ART PAPER	1EA
16		BG68-00296C	LABEL-BAR CODE	DOM MODEL, ART PAPER	1/8EA
17		BG68-00327A	LABEL-BROKEN	ART PAPER	1EA

● Block Diagram

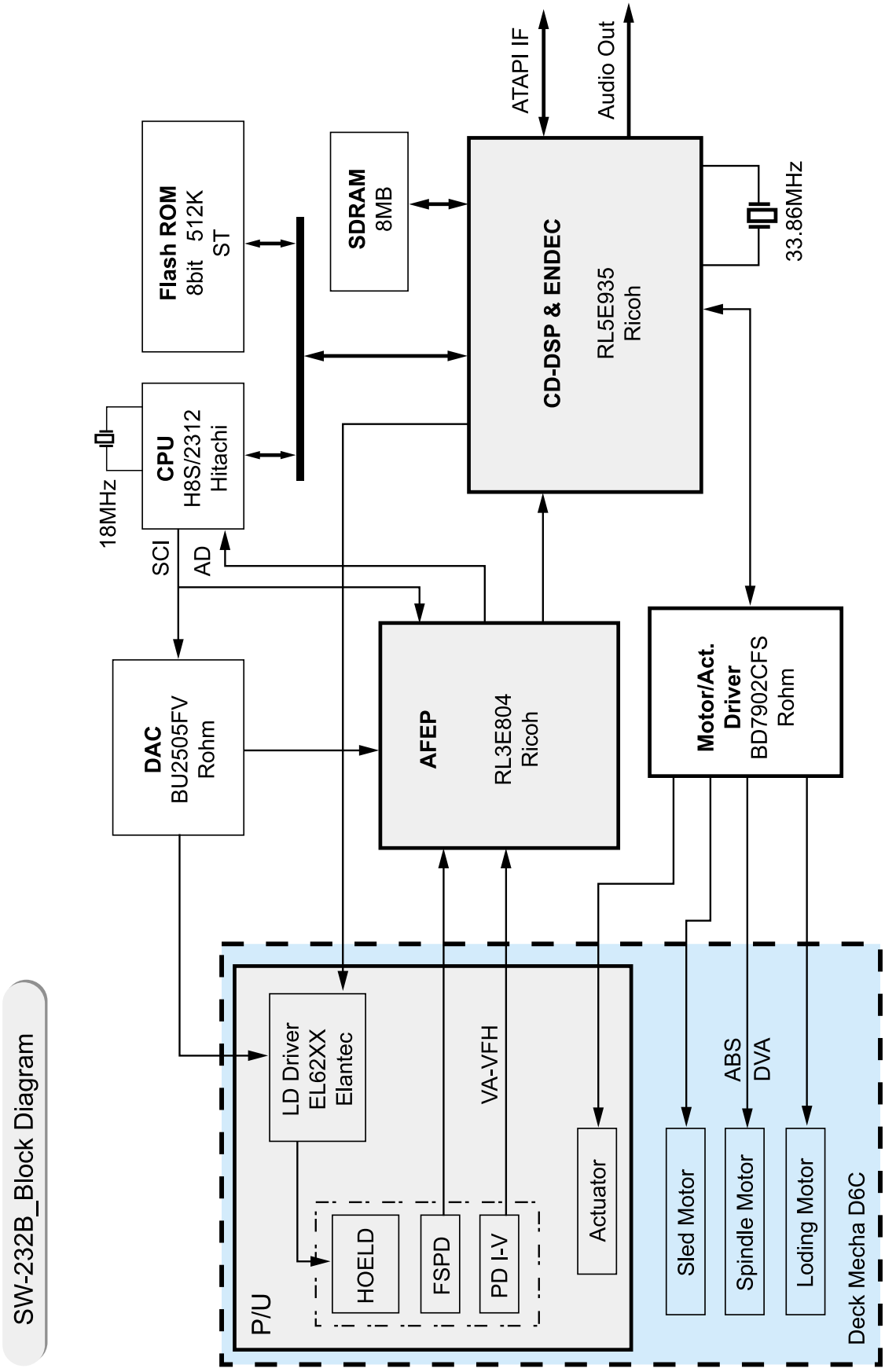

●Trouble Shooting

Check the power source and initial state.

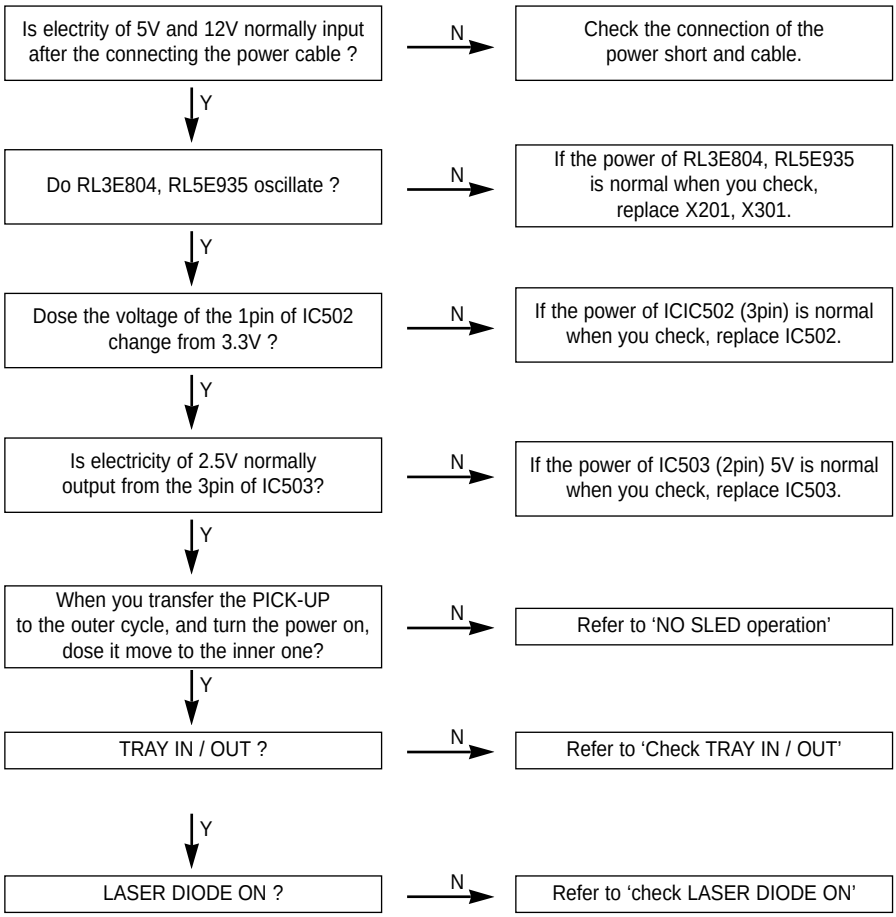

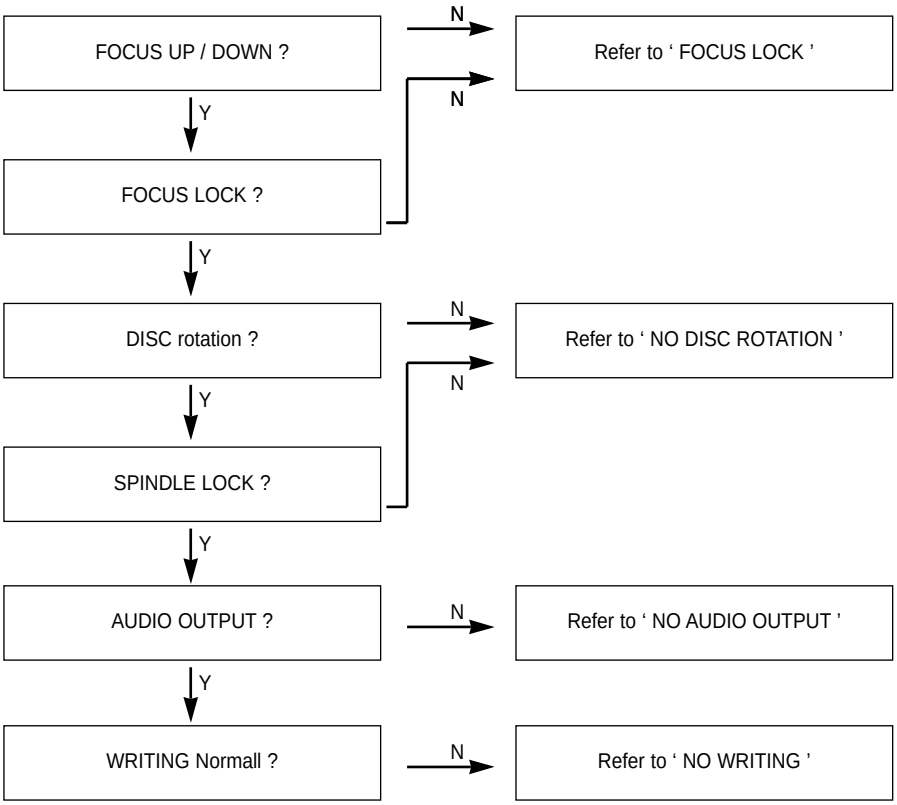
FOCUS UP / DOWN ?
N
Refer to ‘ FOCUS LOCK ’
Y
N
FOCUS LOCK ?
Y
DISC rotation ?
N
Refer to ‘ NO DISC ROTATION ’
Y
N
SPINDLE LOCK ?
Y
AUDIO OUTPUT ?
N
Refer to ‘ NO AUDIO OUTPUT ’
Y
WRITING Normall ?
N
Refer to ‘ NO WRITING ’

No SLED OPERATION

When you transfer the pick-up to the outer cycle and turn the power on, dose the pick-up move to the inner one ?

N → SLED operation of normal.

Y ↓

The below waveform is outputted in IC301 1, 99pin ?

N → If the constant of IC301 and GND, pattern's when you check, replace.

Y ↓

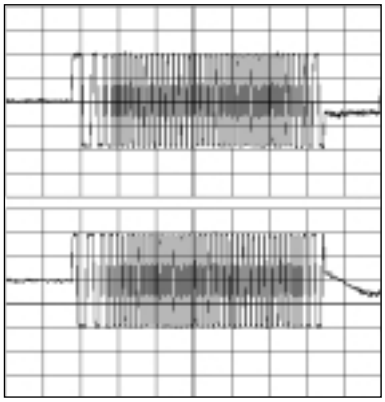

Y ↓

The below waveform is outputted in IC401 35, 37pin ?

N → If the constant of IC401 and GND, pattern's when you check, replace.

Y ↓

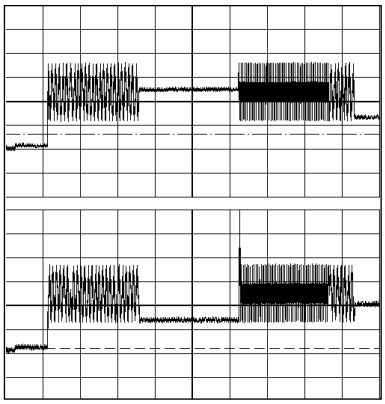

Y ↓

Replace stepping Motor.

No Tray open / close operation

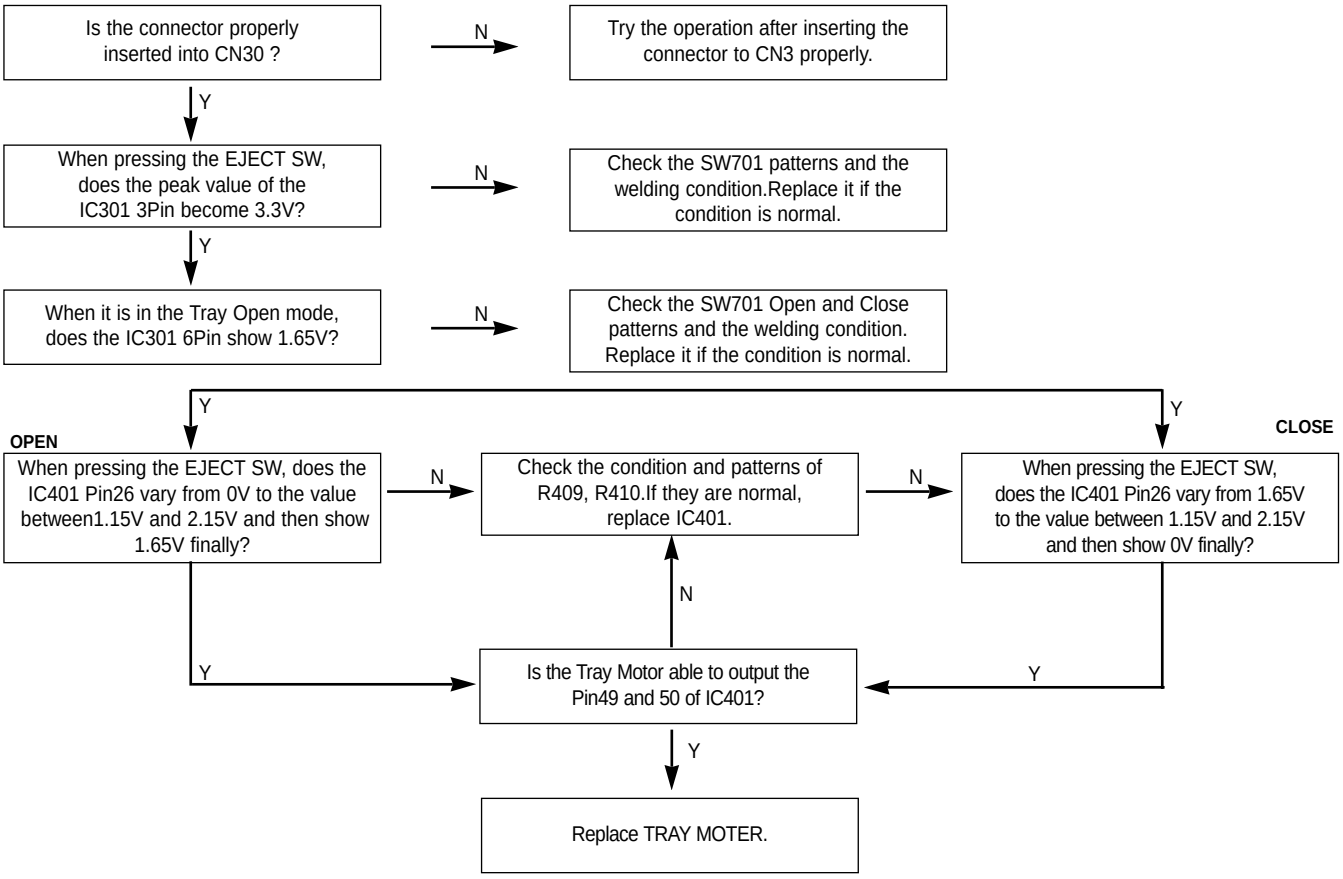

No LASER DIODE ON

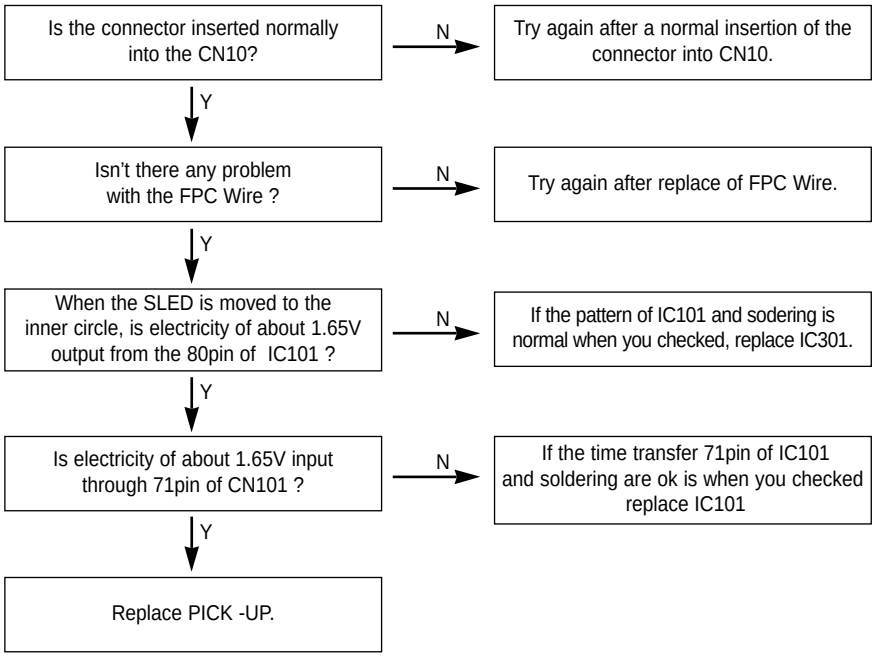

● The value of voltage can be modified slightly, depending on the result of power calibration or the media.

No FOCUS LOCK

FOCUS UP / DOWN ?

Y

Dose the S-curve below come out of the 76(TP:FE)pin of IC101after insertion of a disc ?

N

If the power of IC101 and GND, soldering is normal when you check, replace IC101.

N

If the power of IC201 and GND, soldering is normal when you check, replace IC401.

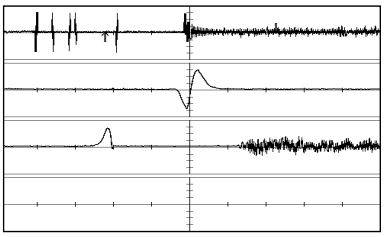

CH 2 : Focus Up / Down FE
CH 3 : S curve
CH 4 : Focus Servo On

Y

Is the waveform above input through the 128pin of IC201 ?

N

If the power of IC201 and GND, constant is normal when you check, replace IC201.

Y

If the power of IC201 and GND, soldering is normal when you check, replace IC201.

N

The below waveform(CH B) is outputted in IC201 132pin ?

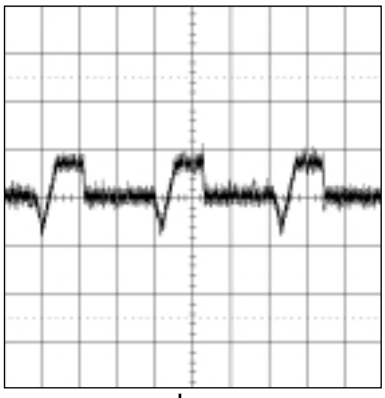

Y

The below waveform(CH B) is outputted in ICIC401 45, 46pin ?

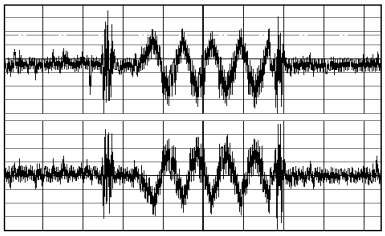

Y

1. Is the FPC Wire inserted normally into the CN10?
2. Isn't the FPC wire disconnected ?

N

1. Try again after a normal insertion of the connector into FPC Wire.
2. Try again after replace of FPC Wire.

Y

Replace Pick-up.

No SPINDLE MOTOR ROTATION

Is the waveform below output through 140pin of IC201 ?

N → If the power of IC201 and pattern's, soldering is normal when you check, replace IC201.

Y ↓

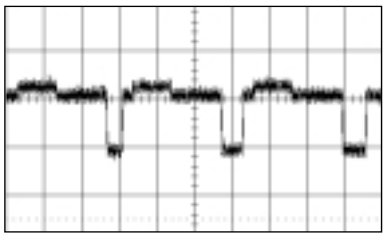

Y ↓

Is the waveform above input through 24pin of IC401 ?

N → If the power of IC401 and pattern's, soldering is normal when you check, replace IC401.

Y ↓

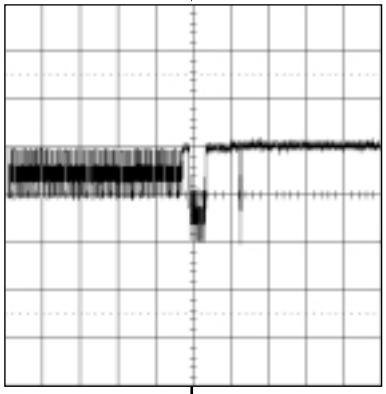

Y ↓

Does output but spindle Motor rotate ?

N → Replace MOTOR.

No AUDIO OUTPUT

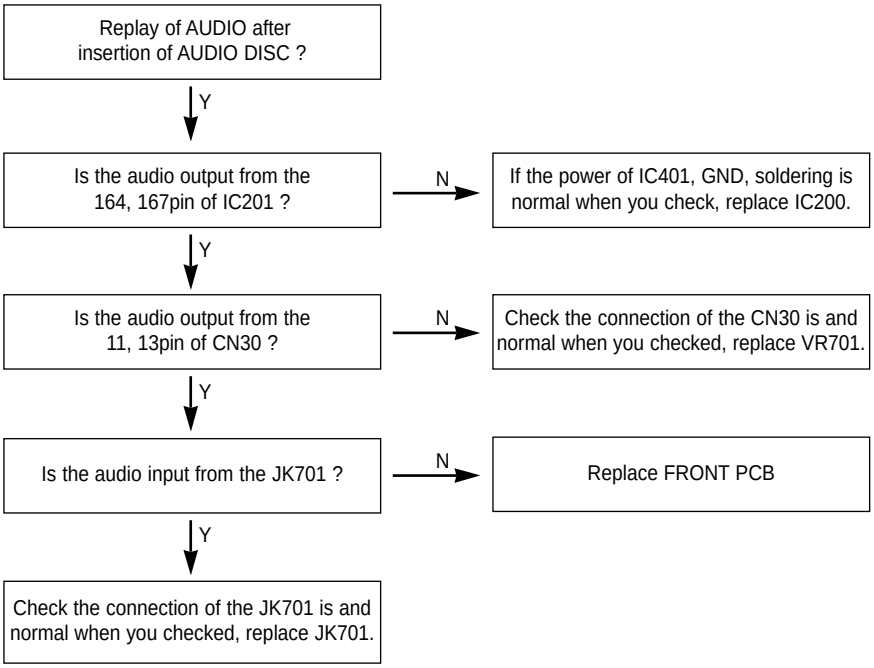

No WRITING

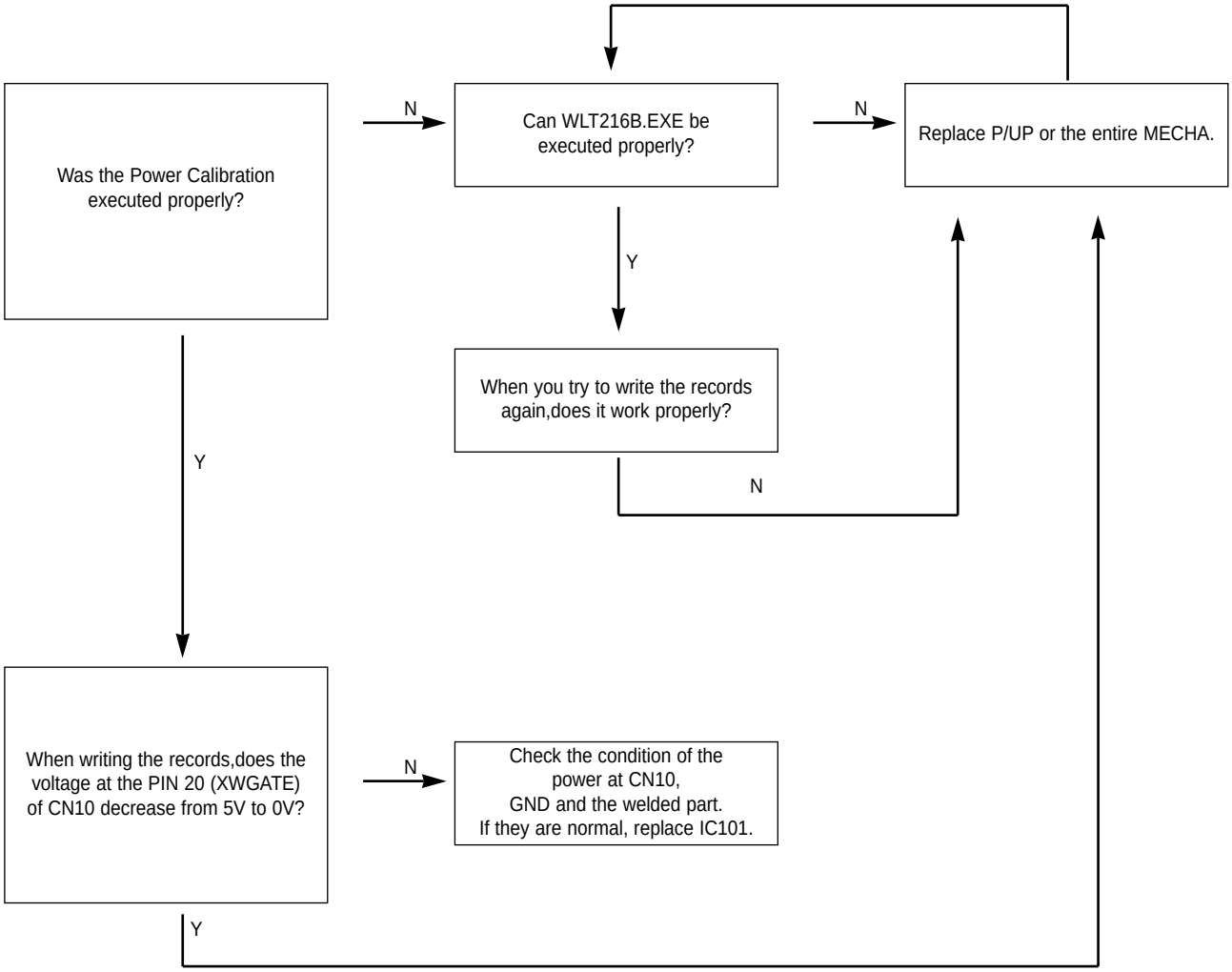
Was the Power Calibration executed properly?
N
Can WLT216B.EXE be executed properly?
N
Replace P/UP or the entire MECHA.
Y
When you try to write the records again,does it work properly?
N
Y
When writing the records,does the voltage at the PIN 20 (XWGATE) of CN10 decrease from 5V to 0V?
N
Check the condition of the power at CN10, GND and the welded part. If they are normal, replace IC101.
Y

● Circuit Diagram

Main

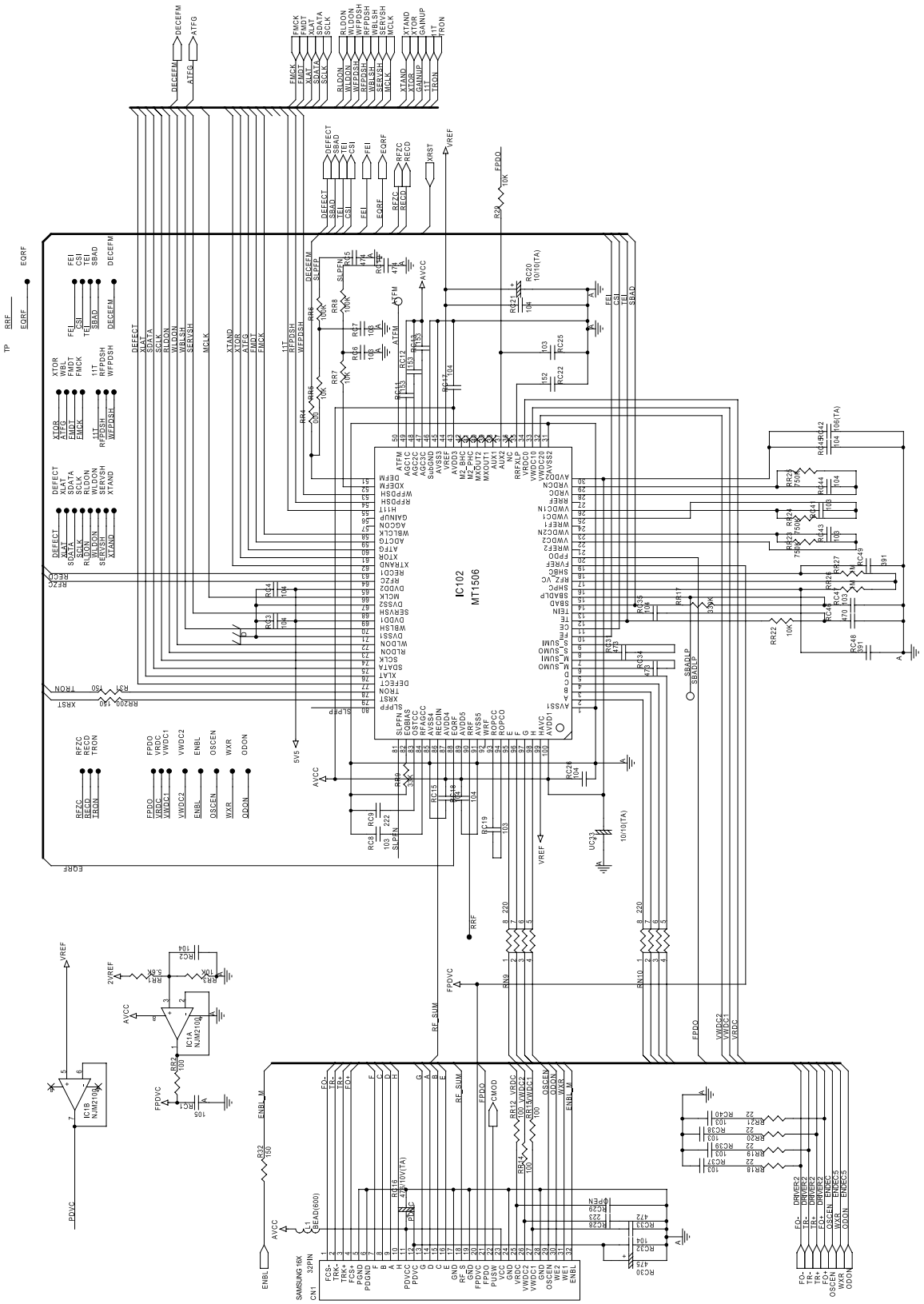

● Circuit Diagram
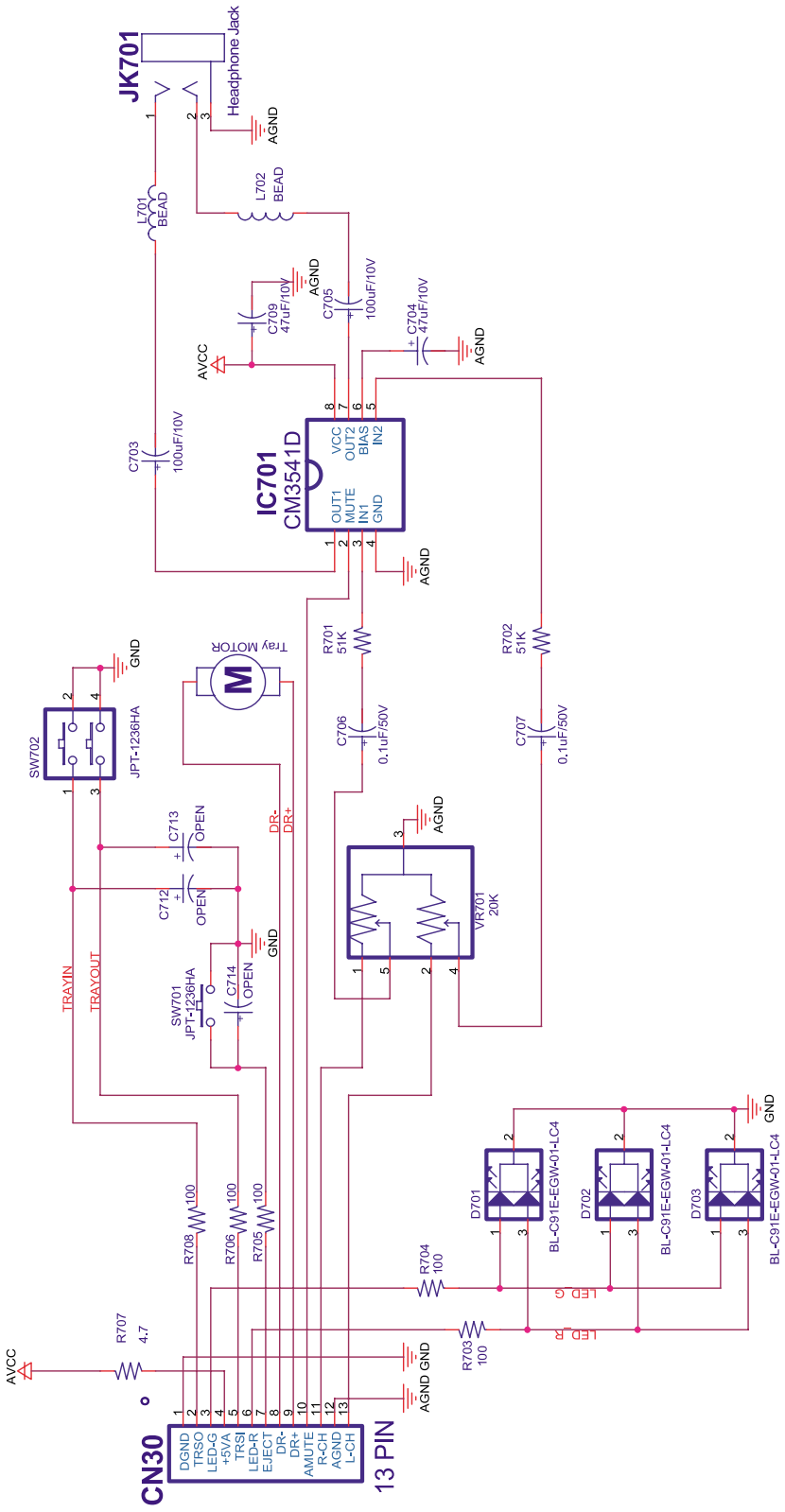
Front