● Main Components Block Diagram and Pin Descrition

● RL3E804

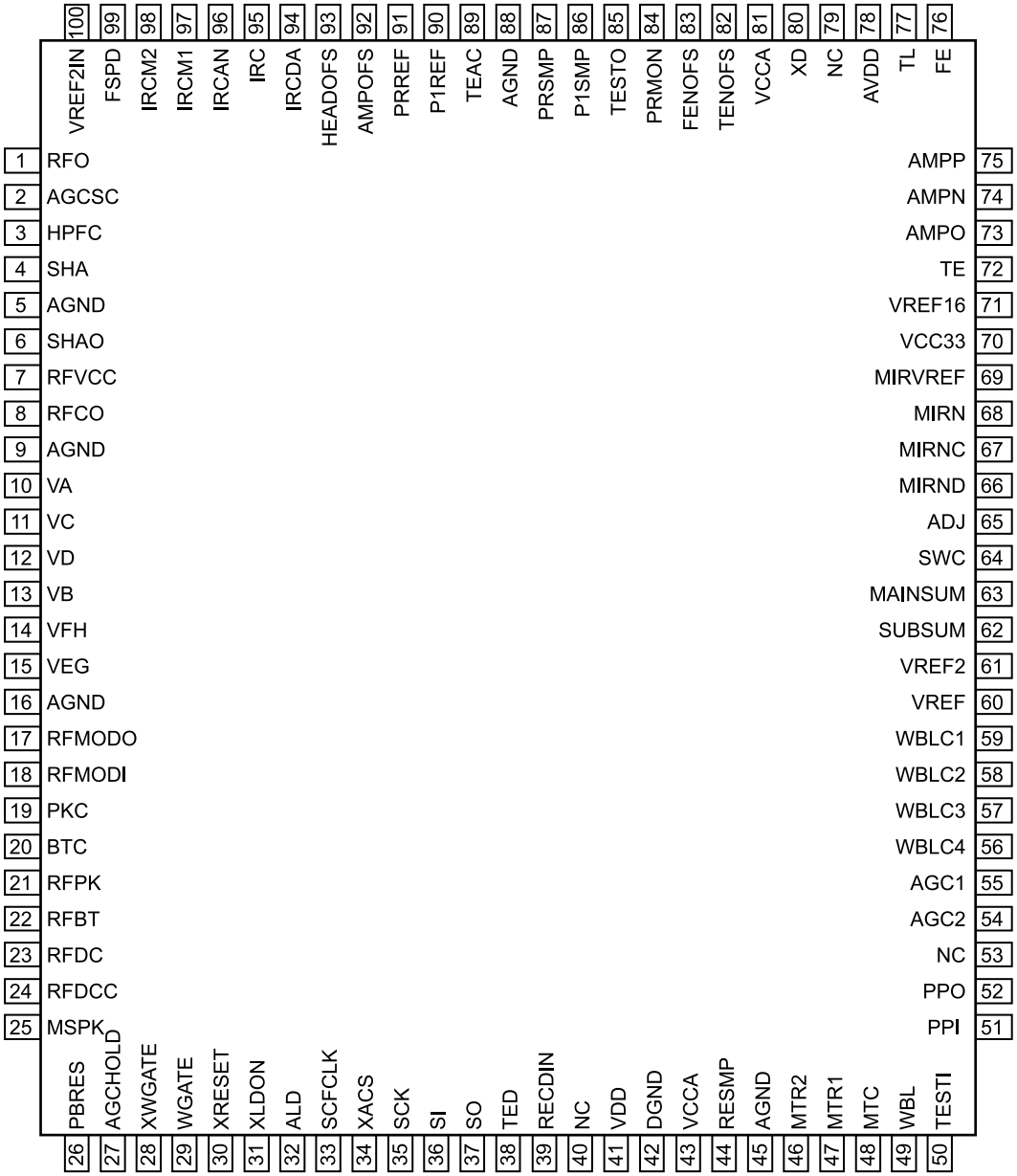

● RL3E804

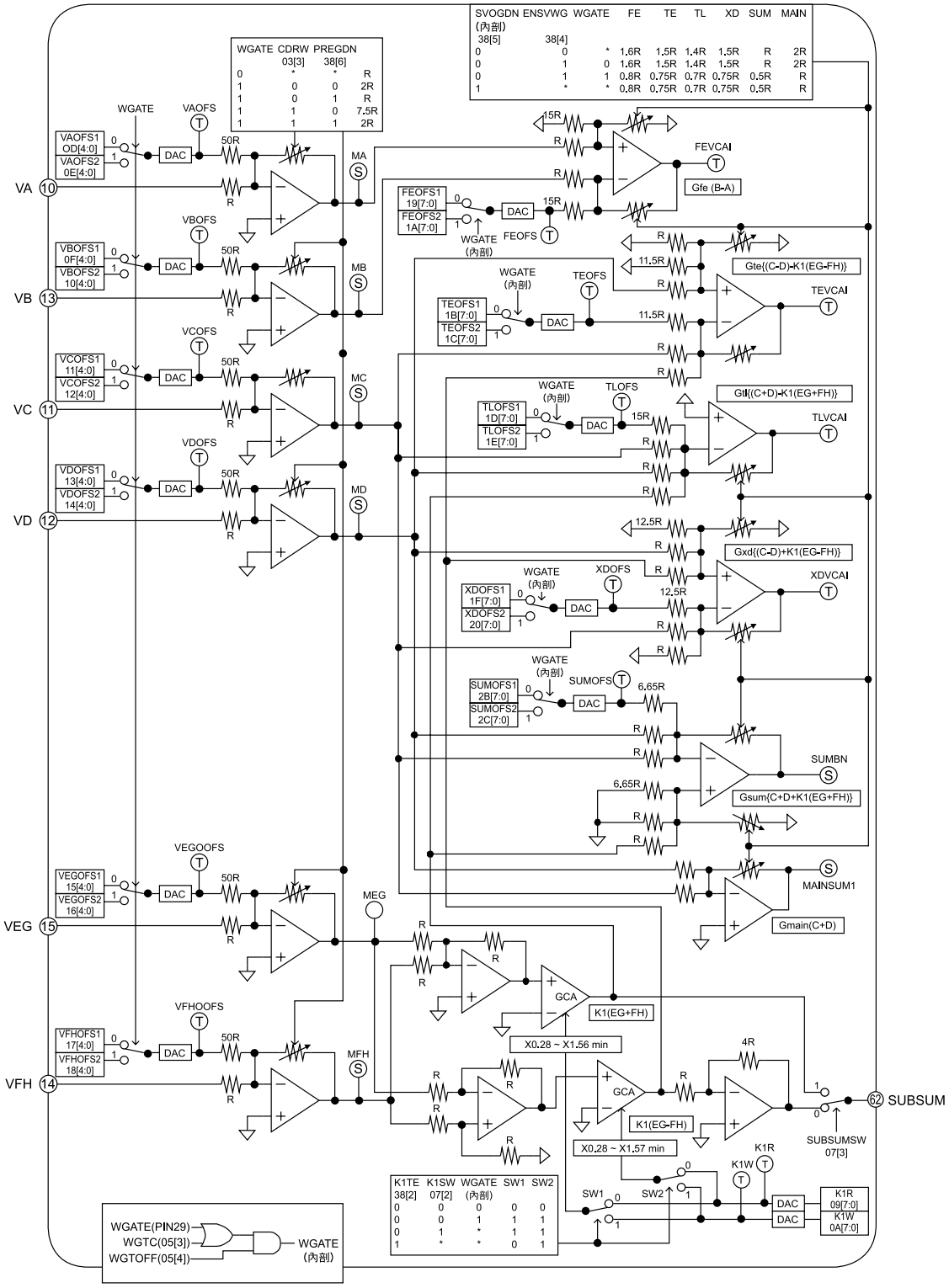
SVOGDN ENSVWG WGATE FE TE TL XD SUM MAIN
(内部)
38[5] 38[4]
0 0 * 1.6R 1.5R 1.4R 1.5R R 2R
0 1 0 1.6R 1.5R 1.4R 1.5R R 2R
0 1 1 0.8R 0.75R 0.7R 0.75R 0.5R R
1 * * 0.8R 0.75R 0.7R 0.75R 0.5R R
WGATE CDRW PREGDN
03[3] 38[6]
0 * * R
1 0 0 2R
1 0 1 R
1 1 0 7.5R
1 1 1 2R
WGATE
VAOFS
VAOFS1 OD[4:0]
VAOFS2 0E[4:0]
DAC
50R
MA
VA 10
VBOFS
VBOFS1 0F[4:0]
VBOFS2 10[4:0]
MB
VB 13
VCOFS
VCOFS1 11[4:0]
VCOFS2 12[4:0]
MC
VC 11
VDOFS
VDOFS1 13[4:0]
VDOFS2 14[4:0]
MD
VD 12
VEGOOFS
VEGOFS1 15[4:0]
VEGOFS2 16[4:0]
MEG
VEG 15
VFHOOFS
VFHOFS1 17[4:0]
VFHOFS2 18[4:0]
MFH
VFH 14
15R
FEVCAI
Gfe (B-A)
FEOFS1 19[7:0]
FEOFS2 1A[7:0]
FEOFS
WGATE (内部)
11.5R
Gte{(C-D)-K1(EG-FH)}
TEVCAI
TEOFS
TEOFS1 1B[7:0]
TEOFS2 1C[7:0]
TLOFS
Gtl{(C+D)-K1(EG+FH)}
TLVCAI
TLOFS1 1D[7:0]
TLOFS2 1E[7:0]
12.5R
Gxd{(C-D)+K1(EG-FH)}
XDVCAI
XDOFS
XDOFS1 1F[7:0]
XDOFS2 20[7:0]
SUMOFS
SUMOFS1 2B[7:0]
SUMOFS2 2C[7:0]
6.65R
SUMBN
Gsum{C+D+K1(EG+FH)}
MAINSUM1
Gmain(C+D)
GCA
K1(EG+FH)
X0.28 ~ X1.56 min
X0.28 ~ X1.57 min
4R
SUBSUM
SUBSUMSW 07[3]
K1R
K1W
SW1
SW2
K1R 09[7:0]
K1W 0A[7:0]
K1TE K1SW WGATE SW1 SW2
38[2] 07[2] (内部)
WGATE(PIN29)
WGTC(05[3])
WGTOFF(05[4])
WGATE (内部)

● RL3E804

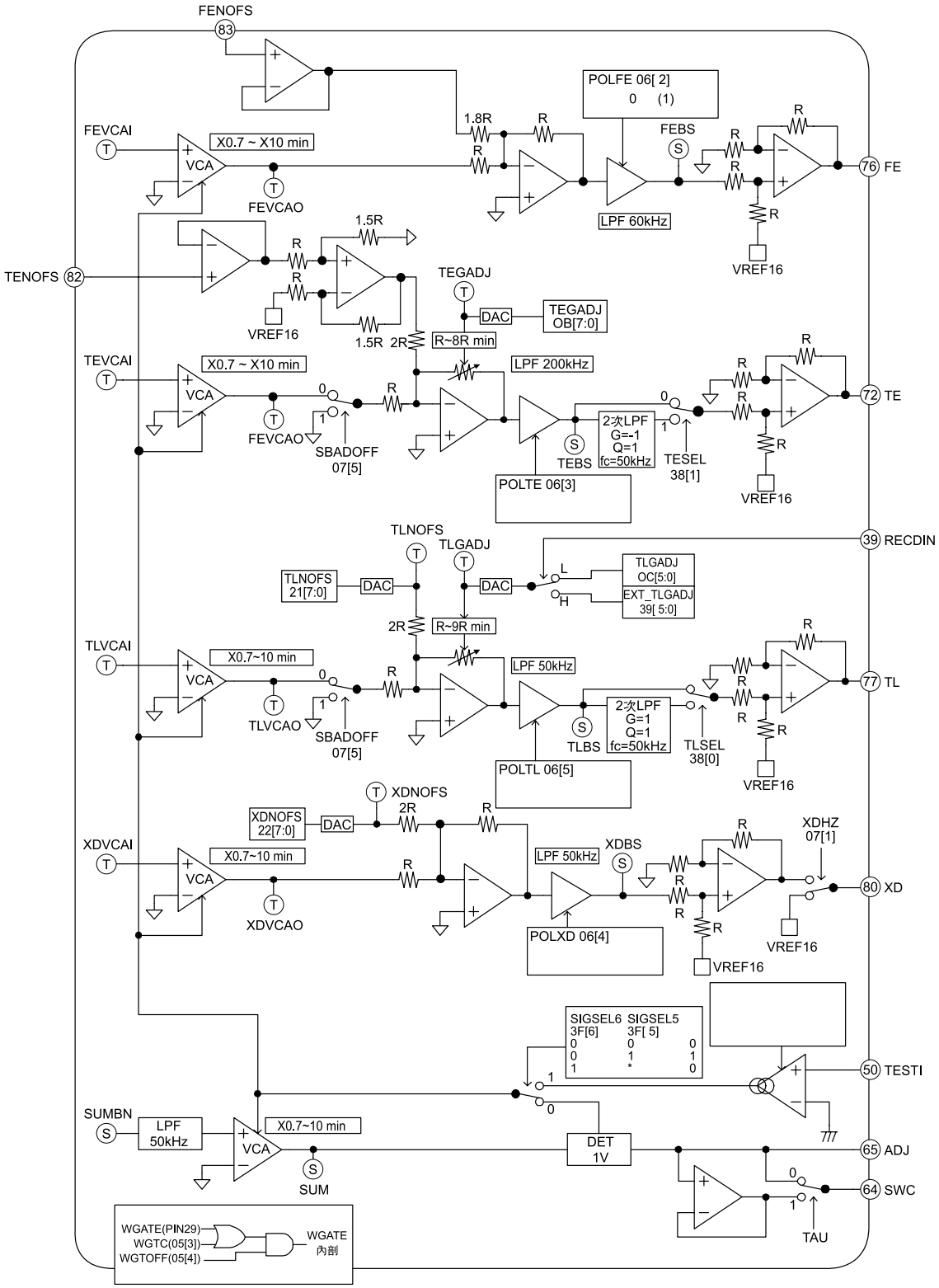
FENOFS
83
POLFE 06[2]
0 (1)
1.8R
R
FEVCAI
X0.7 ~ X10 min
VCA
FEVCAO
FEBS
LPF 60kHz
76 FE
VREF16
TENOFS 82
1.5R
TEGADJ
DAC
TEGADJ OB[7:0]
R~8R min
TEVCAI
X0.7 ~ X10 min
LPF 200kHz
2次LPF G=-1 Q=1 fc=50kHz
TEBS
TESEL 38[1]
SBADOFF 07[5]
POLTE 06[3]
72 TE
TLNOFS
TLGADJ
39 RECDIN
TLNOFS 21[7:0]
TLGADJ OC[5:0]
EXT_TLGADJ 39[5:0]
R~9R min
TLVCAI
X0.7~10 min
LPF 50kHz
2次LPF G=1 Q=1 fc=50kHz
TLBS
TLSEL 38[0]
TLVCAO
POLTL 06[5]
77 TL
XDNOFS
XDNOFS 22[7:0]
XDVCAI
X0.7~10 min
XDBS
XDHZ 07[1]
XDVCAO
POLXD 06[4]
80 XD
SIGSEL6 3F[6] SIGSEL5 3F[5]
50 TESTI
SUMBN
LPF 50kHz
X0.7~10 min
DET 1V
SUM
65 ADJ
64 SWC
TAU
WGATE(PIN29)
WGTC(05[3])
WGTOFF(05[4])
WGATE 内部

● RL3E804

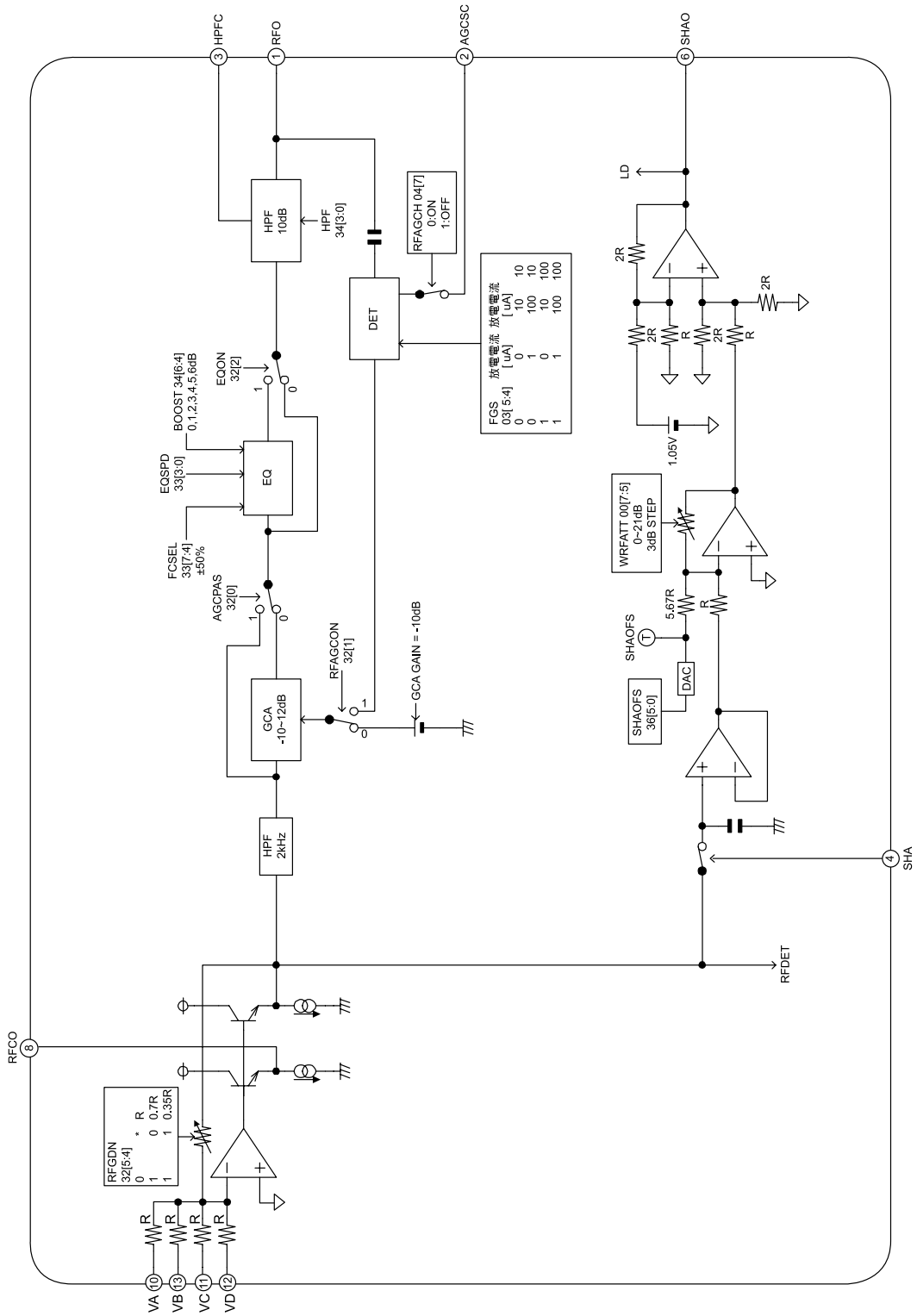
HPFC
RFO
AGCSC
SHAO
HPF 10dB
HPF 34[3:0]
RFAGCH 04[7] 0:ON 1:OFF
DET
FGS 03[5:4] 放電電流 [uA] 放電電流 [uA]
0 0 10 10
0 1 100 10
1 0 10 100
1 1 100 100
LD
2R
R
1.05V
BOOST 34[6:4] 0,1,2,3,4,5,6dB
EQON 32[2]
EQSPD 33[3:0]
EQ
FCSEL 33[7:4] ±50%
AGCPAS 32[0]
RFAGCON 32[1]
GCA GAIN = -10dB
GCA -10~12dB
WRFATT 00[7:5] 0~21dB 3dB STEP
5.67R
SHAOFS
DAC
SHAOFS 36[5:0]
HPF 2kHz
SHA
RFDET
RFCO
RFGDN 32[5:4] * R
0 0.7R
1 0.35R
VA
VB
VC
VD

● RL3E804

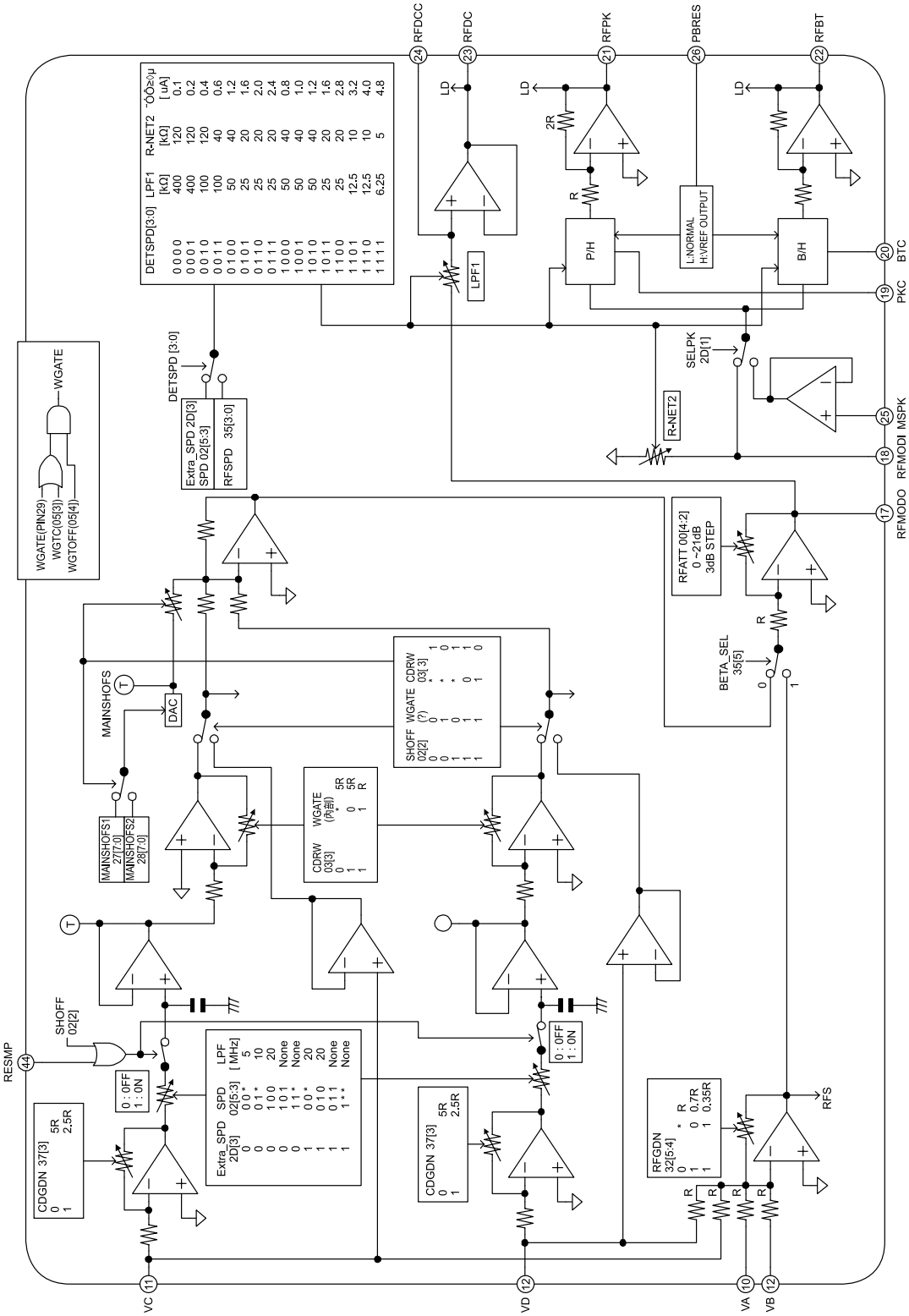

RFDCC
RFDC
RFPK
PBRES
RFBT
LD
2R
R
P/H
B/H
L:NORMAL
H:VREF OUTPUT
LPF1
BTC
PKC
MSPK
RFMODI
RFMODO
SELPK
2D[1]
R-NET2
DETSPD [3:0]
Extra_SPD 2D[3]
SPD 02[5:3]
RFSPD 35[3:0]
WGATE
WGATE(PIN29)
WGTC(05[3])
WGTOFF(05[4])
RFATT 00[4:2]
0 ~21dB
3dB STEP
BETA_SEL
35[5]
MAINSHOFS
DAC
MAINSHOFS1
27[7:0]
MAINSHOFS2
28[7:0]
SHOFF
02[2]
RESMP
0 : OFF
1 : ON
CDGDN 37[3]
5R
2.5R
RFGDN
32[5:4]
0.7R
0.35R
RFS
VC
VD
VA
VB

● RL3E804

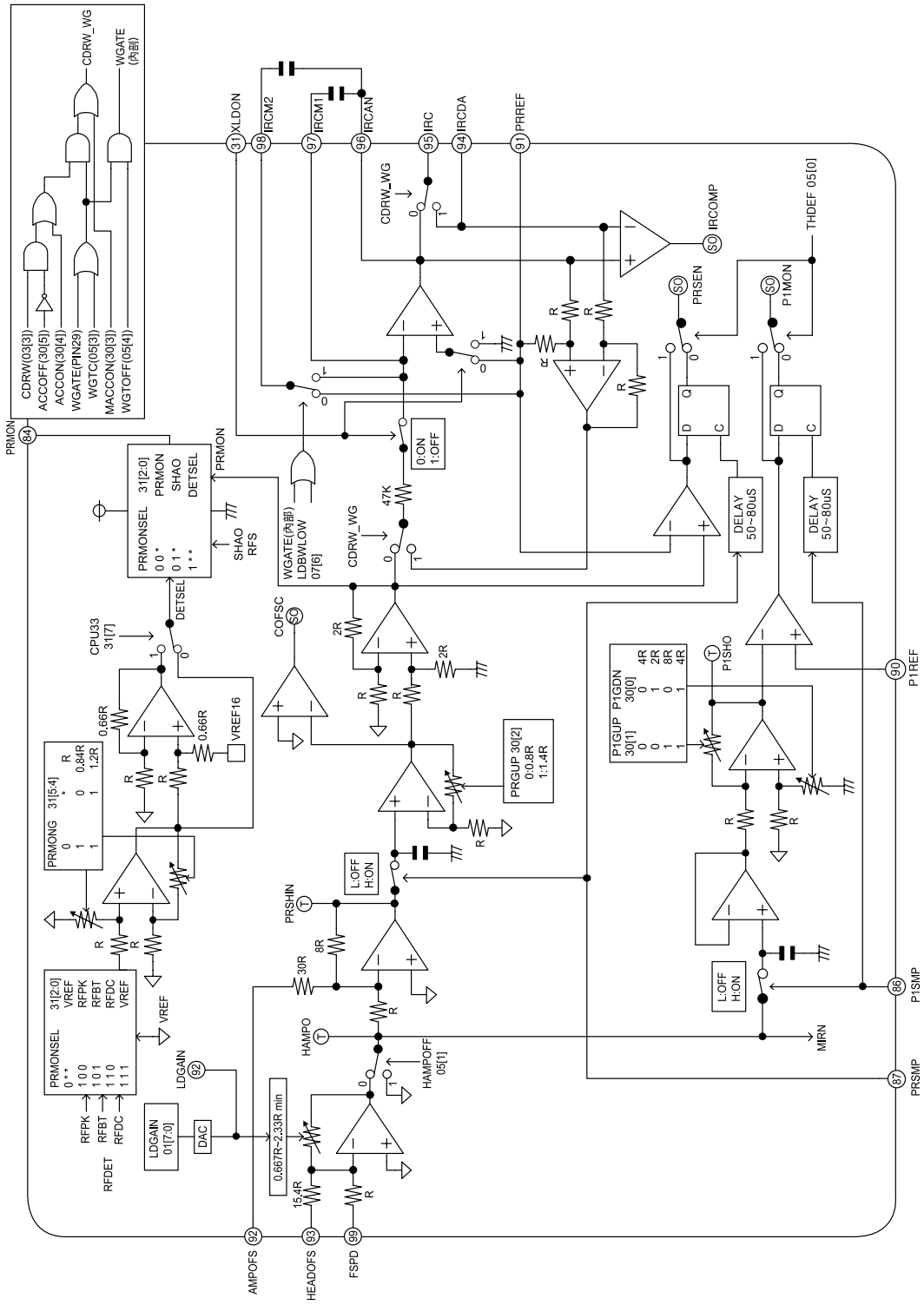

CDRW(03[3])
ACCOFF(30[5])
ACCON(30[4])
WGATE(PIN29)
WGTC(05[3])
MACCON(30[3])
WGTOFF(05[4])
CDRW_WG
WGATE (內部)
PRMON
84
31 XLDON
98 IRCM2
97 IRCM1
96 IRCAN
95 IRC
94 IRCDA
91 PRREF
CDRW_WG
IRCOMP
THDEF 05[0]
PRSEN
P1MON
PRMONSEL 31[2:0]
PRMON
SHAO
DETSEL
SHAO
RFS
WGATE(內部)
LDBWLOW
07[6]
0:ON
1:OFF
47K
DELAY
50~80uS
DELAY
50~80uS
CPU33
31[7]
DETSEL
COFSC
2R
0.66R
0.66R
VREF16
PRMONG 31[5:4]
PRGUP 30[2]
0:0.8R
1:1.4R
P1GUP P1GDN
30[1] 30[0]
P1SHO
90 P1REF
L:OFF
H:ON
PRSHIN
8R
30R
PRMONSEL 31[2:0]
VREF
RFPK
RFBT
RFDC
VREF
HAMPO
HAMPOFF
05[1]
MIRN
86 P1SMP
87 PRSMP
LDGAIN
92
LDGAIN
01[7:0]
DAC
0.667R~2.33R min
15.4R
RFDET
AMPOFS
92
HEADOFS
93
FSPD
99

● RL3E804

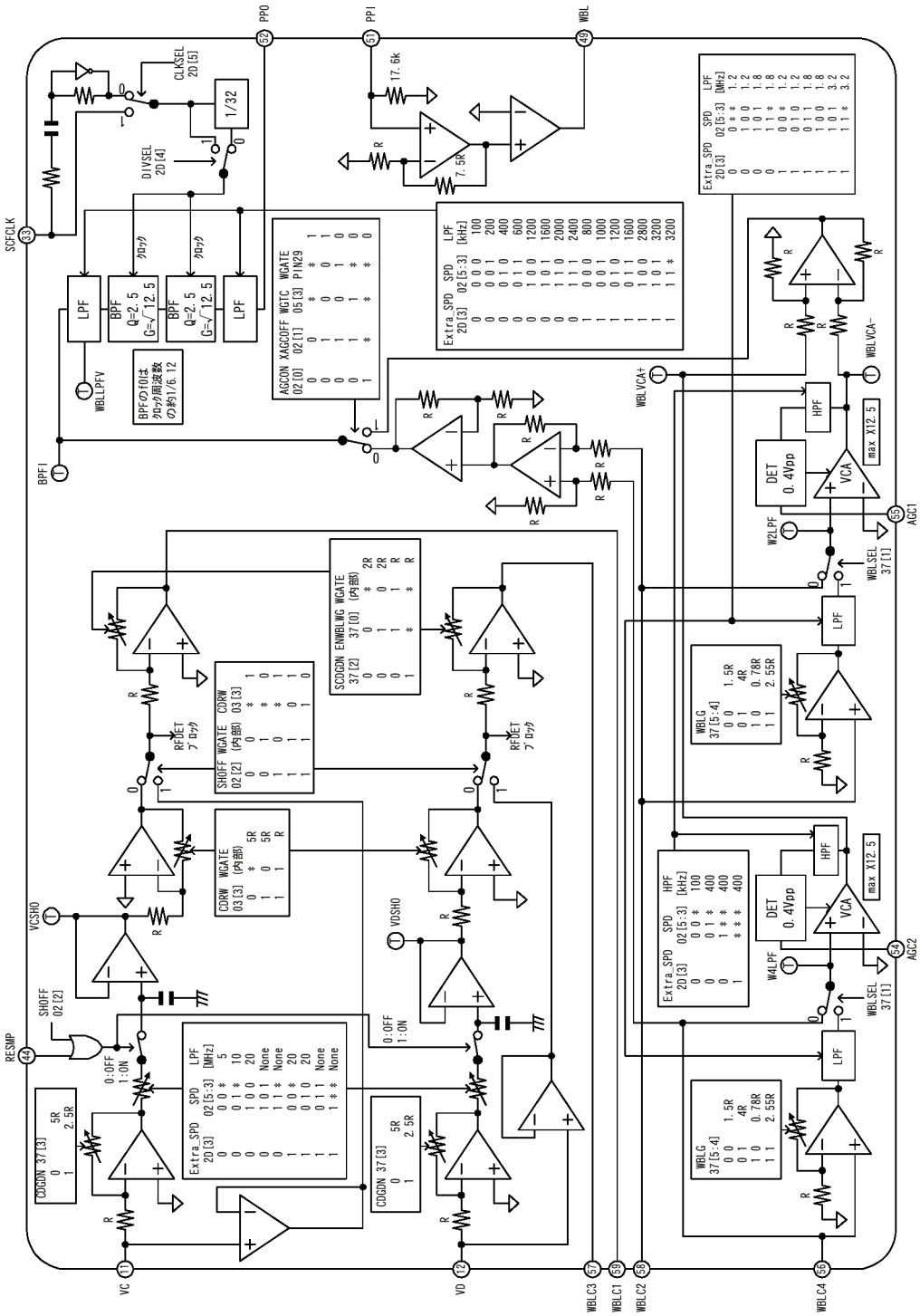

PPO
PPI
WBL
SCFCLK
CLKSEL 2D[5]
DIVSEL 2D[4]
1/32
17.6k
7.5R
LPF
BPF Q=2.5 G=√12.5
BPF Q=2.5 G=√12.5
LPF
WBLLPFV
BPFの f0は クロック周波数 の約1/6.12
AGCON XAGCOFF WGTC WGATE
02[0] 02[1] 05[3] PIN29
Extra_SPD SPD LPF
2D[3] 02[5:3] [kHz]
Extra_SPD SPD LPF
2D[3] 02[5:3] [MHz]
BPFI
WBLVCA+
WBLVCA-
HPF
DET 0.4Vpp
VCA
max X12.5
W2LPF
AGC1
WBLSEL 37[1]
SCDGDN ENWBLWG WGATE
37[2] 37[0] (内部)
SHOFF WGATE CDRW
02[2] (内部) 03[3]
RFDET ブロック
CDRW WGATE
03[3] (内部)
WBLG
37[5:4]
VCSHO
VDSHO
SHOFF 02[2]
RESMP
0:OFF 1:ON
CDGDN 37[3]
Extra_SPD SPD LPF
2D[3] 02[5:3] [MHz]
Extra_SPD SPD HPF
2D[3] 02[5:3] [kHz]
W4LPF
AGC2
VC
VD
WBLC3
WBLC1
WBLC2
WBLC4

● RL3E804

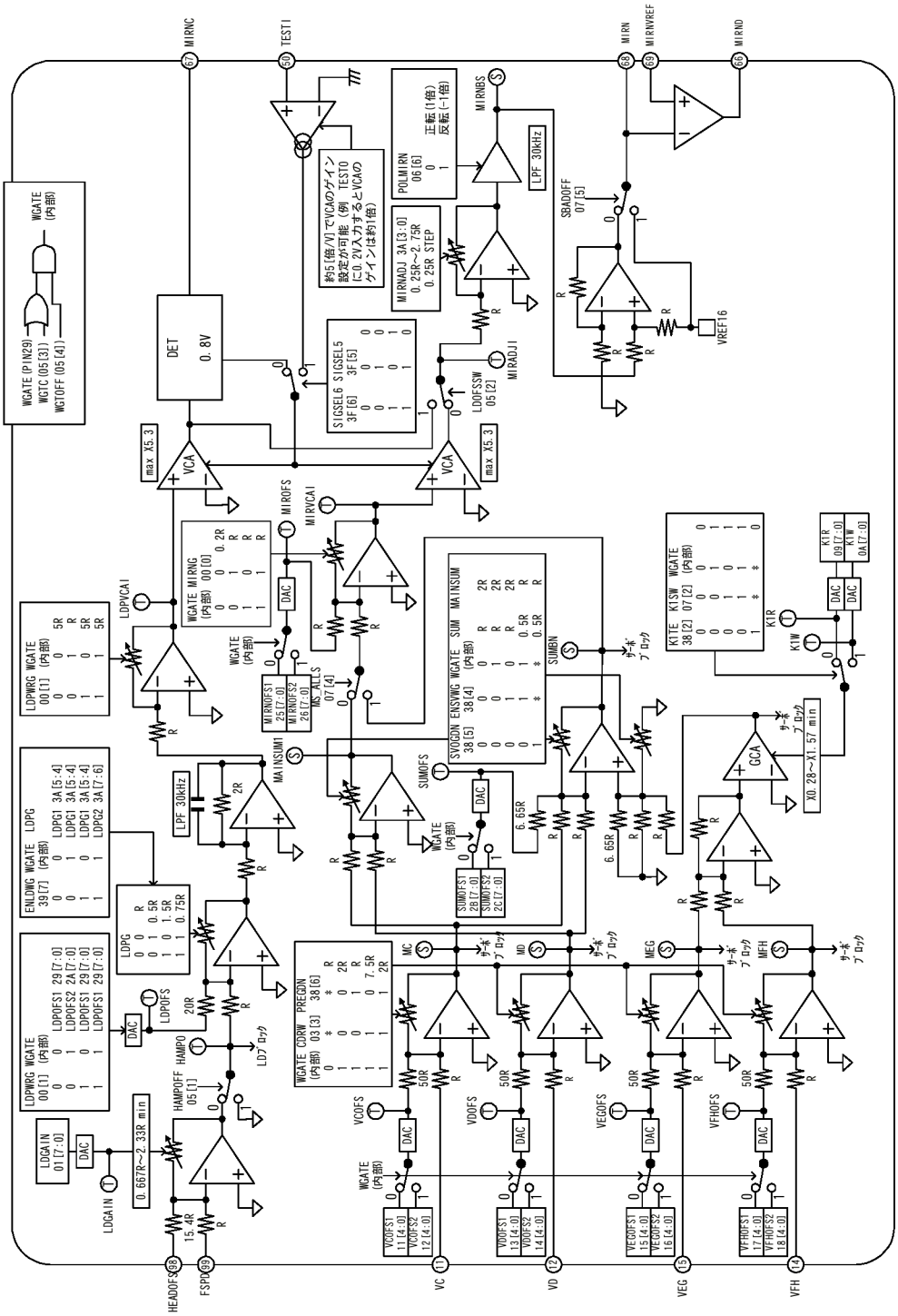

MIRNC
TEST1
MIRN
MIRNVREF
MIRND
WGATE (内部)
WGATE (PIN29)
WGTC (05[3])
WGTOFF (05[4])
DET
0.8V
SIGSEL6 SIGSEL5
3F[6] 3F[5]
POLMIRN
06[6]
正転(1倍)
反転(-1倍)
MIRNBS
LPF 30kHz
MIRNADJ 3A[3:0]
0.25R~2.75R
0.25R STEP
SBADOFF
07[5]
VREF16
MIRADJ1
LDOFSSW
05[2]
VCA
max X5.3
MIROFS
MIRVCA1
WGATE MIRNG
(内部) 00[0]
LDPVCA1
LDPWRG WGATE
00[1] (内部)
MIRNOFS1
25[7:0]
MIRNOFS2
26[7:0]
MS_ALLS
07[4]
SVOGDN ENSVWG WGATE SUM MAINSUM
38[5] 38[4] (内部)
SUMBN
K1TE K1SW WGATE
38[2] 07[2] (内部)
K1R
K1W
K1R
09[7:0]
K1W
0A[7:0]
MAINSUM1
SUMOFS
GCA
X0.28~X1.57 min
ENLDWG WGATE LDPG
39[7] (内部)
LDPG1 3A[5:4]
LDPG1 3A[5:4]
LDPG1 3A[5:4]
LDPG2 3A[7:6]
LPF 30kHz
LDPG
LDPWRG WGATE
00[1] (内部)
LDPOFS1 29[7:0]
LDPOFS2 2A[7:0]
LDPOFS1 29[7:0]
LDPOFS1 29[7:0]
LDPOFS
HAMPO
LDブロック
WGATE CDRW PREGDN
(内部) 03[3] 38[6]
MC
MD
MEG
MFH
サーボブロック
LDGAIN
01[7:0]
0.667R~2.33R min
HAMPOFF
05[1]
VCOFS
VDOFS
VEGOFS
VFHOFS
VCOFS1
11[4:0]
VCOFS2
12[4:0]
VDOFS1
13[4:0]
VDOFS2
14[4:0]
VEGOFS1
15[4:0]
VEGOFS2
16[4:0]
VFHOFS1
17[4:0]
VFHOFS2
18[4:0]
HEADOFS
FSPD
VC
VD
VEG
VFH

● RL3E804

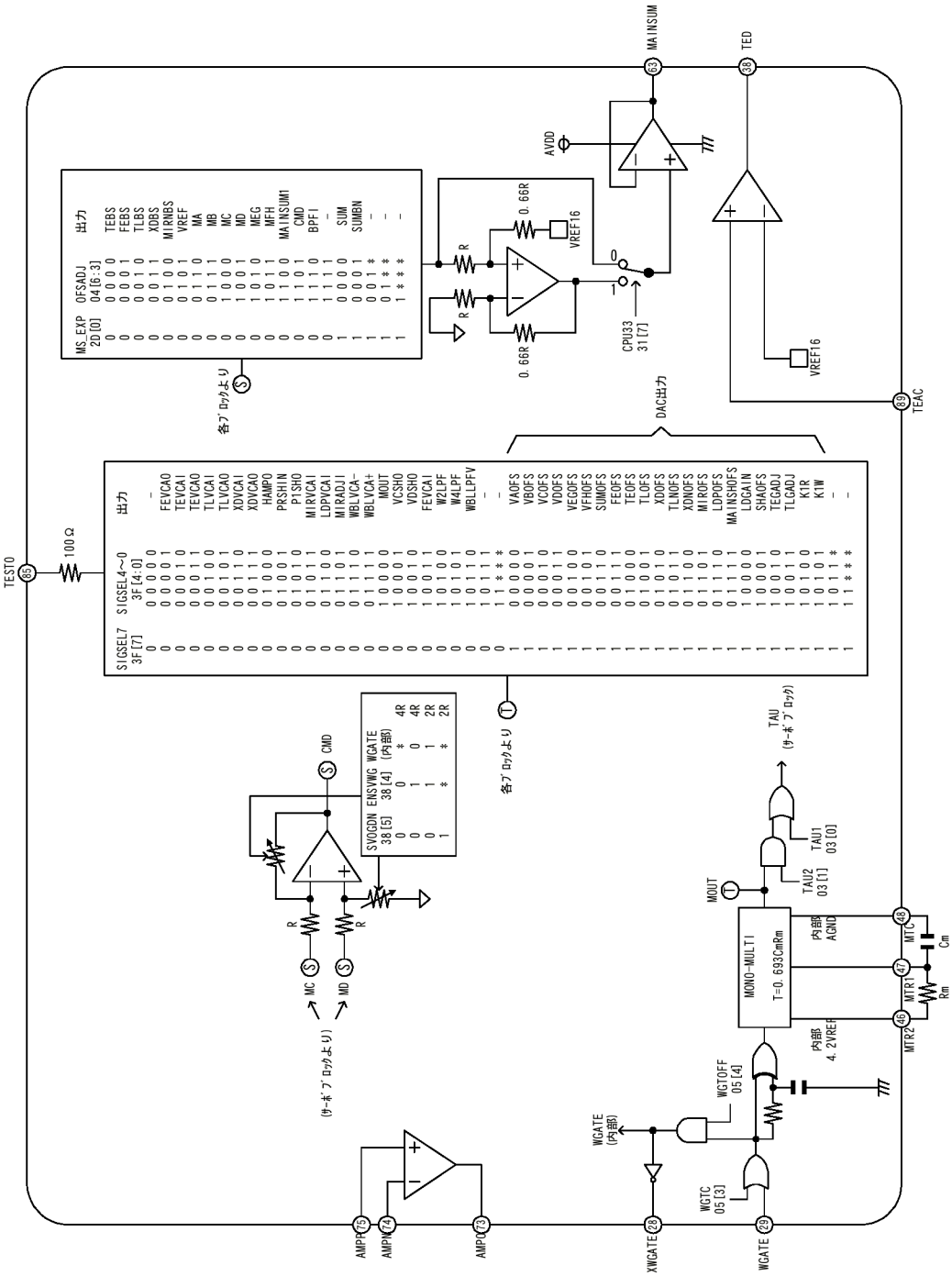
TESTO
100Ω
MS_EXP 2D[0]
OFSADJ 04[6:3]
出力
TEBS
FEBS
TLBS
XDBS
M1RHBS
VREF
MA
MB
MC
MD
MEG
MFH
MAINSUM1
CMD
BPF1
SUM
SUMBN
各ブロックより
0.66R
VREF16
CPU33 31[7]
AVDD
MAINSUM
TED
VREF16
TEAC
DAC出力
SIGSEL7 3F[7]
SIGSEL4~0 3F[4:0]
FEVCAO
TEVCAO
TLVCAO
XDVCAO
HAMPO
PRSHIN
P3SHO
M1RVCAI
LDPVCAI
M1RADJI
WBLVCA−
WBLVCA+
MOUT
VCSHO
VDSHO
FEVCAI
W2LPF
W4LPF
WBLLPFV
VAOFS
VBOFS
VCOFS
VDOFS
VEGOFS
VFHOFS
SUMOFS
FEOFS
TEOFS
TLOFS
XDOFS
TLNOFS
XDNOFS
M1ROFS
LDPOFS
MAINSHOFS
LDGAIN
SHAOFS
TEGADJ
TLGADJ
K1R
K1W
SVOGON 38[5]
ENSVWG 38[4]
WGATE (内部)
4R
2R
CMD
MC
MD
(サーボブロックより)
TAU (サーボブロック)
TAU1 03[0]
TAU2 03[1]
MOUT
MONO-MULTI
T=0.693CmRm
内部 AGND
内部 4.2VREF
MTC
MTR1
MTR2
Cm
Rm
WGTOFF 05[4]
WGTC 05[3]
WGATE (内部)
AMPQ(5)
AMPK(4)
AMPQ(3)
XWGATE(28)
WGATE(29)

● RL3E804

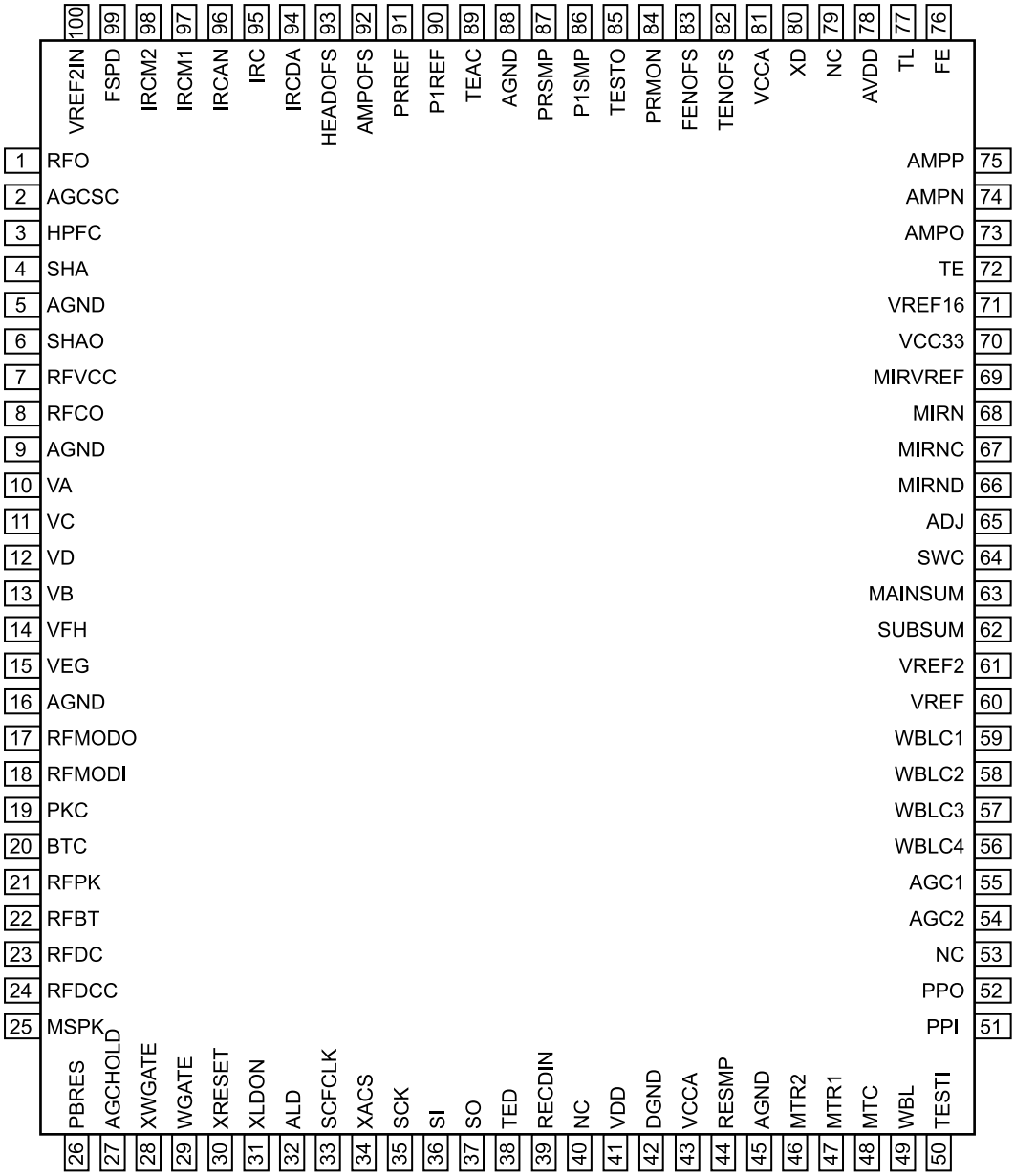
1 RFO
2 AGCSC
3 HPFC
4 SHA
5 AGND
6 SHAO
7 RFVCC
8 RFCO
9 AGND
10 VA
11 VC
12 VD
13 VB
14 VFH
15 VEG
16 AGND
17 RFMODO
18 RFMODI
19 PKC
20 BTC
21 RFPK
22 RFBT
23 RFDC
24 RFDCC
25 MSPK
26 PBRES
27 AGCHOLD
28 XWGATE
29 WGATE
30 XRESET
31 XLDON
32 ALD
33 SCFCLK
34 XACS
35 SCK
36 SI
37 SO
38 TED
39 RECDIN
40 NC
41 VDD
42 DGND
43 VCCA
44 RESMP
45 AGND
46 MTR2
47 MTR1
48 MTC
49 WBL
50 TESTI
51 PPI
52 PPO
53 NC
54 AGC2
55 AGC1
56 WBLC4
57 WBLC3
58 WBLC2
59 WBLC1
60 VREF
61 VREF2
62 SUBSUM
63 MAINSUM
64 SWC
65 ADJ
66 MIRND
67 MIRNC
68 MIRN
69 MIRVREF
70 VCC33
71 VREF16
72 TE
73 AMPO
74 AMPN
75 AMPP
76 FE
77 TL
78 AVDD
79 NC
80 XD
81 VCCA
82 TENOFS
83 FENOFS
84 PRMON
85 TESTO
86 P1SMP
87 PRSMP
88 AGND
89 TEAC
90 P1REF
91 PRREF
92 AMPOFS
93 HEADOFS
94 IRCDA
95 IRC
96 IRCAN
97 IRCM1
98 IRCM2
99 FSPD
100 VREF2IN

● RL3E804

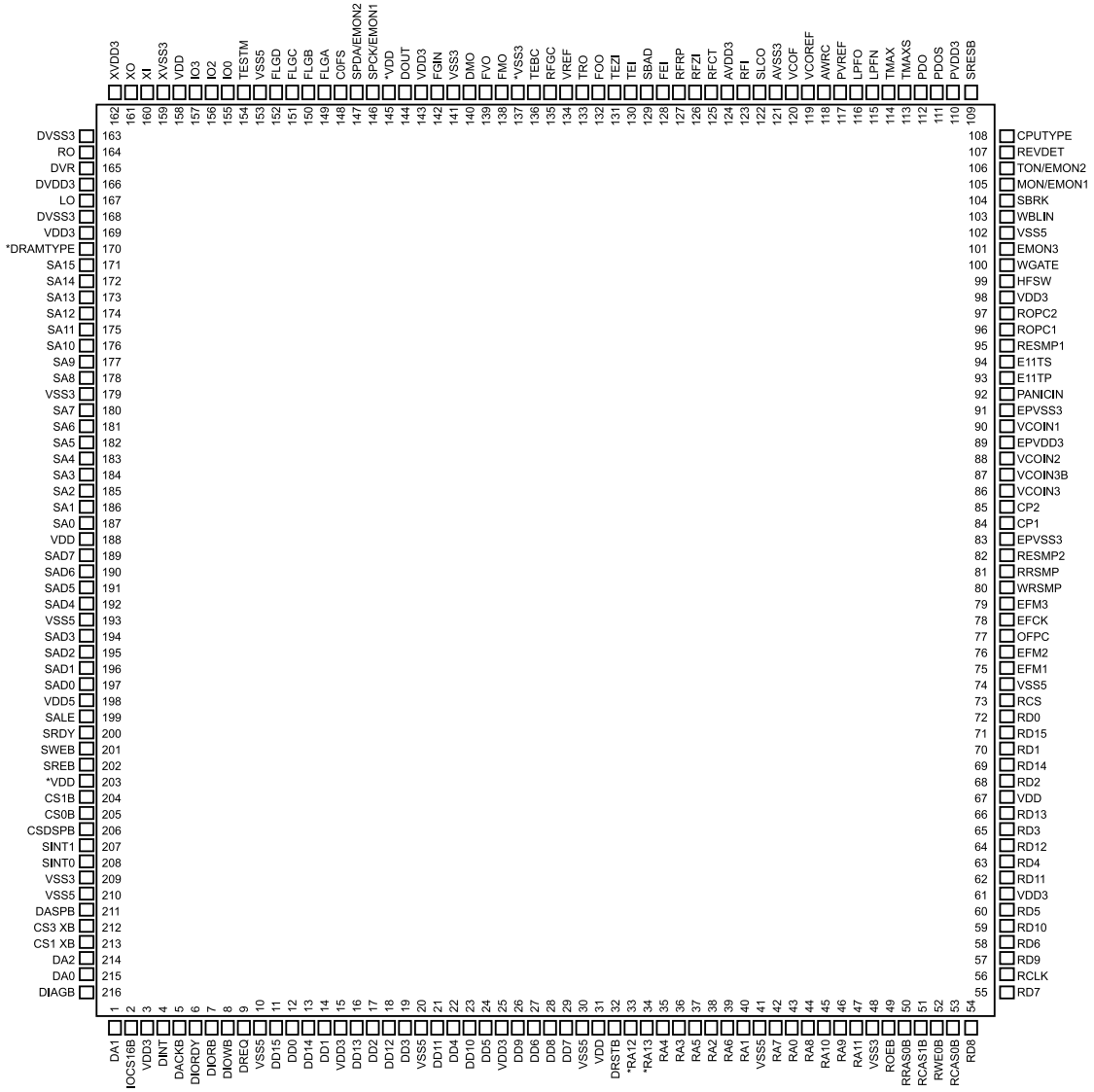
XVDD3 162
XO 161
XI 160
XVSS3 159
VDD 158
IO3 157
IO2 156
IO0 155
TESTM 154
VSS5 153
FLGD 152
FLGC 151
FLGB 150
FLGA 149
C0FS 148
SPDA/EMON2 147
SPCK/EMON1 146
*VDD 145
DOUT 144
VDD3 143
FGIN 142
VSS3 141
DMO 140
FVO 139
FMO 138
*VSS3 137
TEBC 136
RFGC 135
VREF 134
TRO 133
FOO 132
TEZI 131
TEI 130
SBAD 129
FEI 128
RFRP 127
RFZI 126
RFCT 125
AVDD3 124
RFI 123
SLCO 122
AVSS3 121
VCOF 120
VCOREF 119
AWRC 118
PVREF 117
LPFO 116
LPFN 115
TMAX 114
TMAXS 113
PDO 112
PDOS 111
PVDD3 110
SRESB 109
DVSS3 163
RO 164
DVR 165
DVDD3 166
LO 167
DVSS3 168
VDD3 169
*DRAMTYPE 170
SA15 171
SA14 172
SA13 173
SA12 174
SA11 175
SA10 176
SA9 177
SA8 178
VSS3 179
SA7 180
SA6 181
SA5 182
SA4 183
SA3 184
SA2 185
SA1 186
SA0 187
VDD 188
SAD7 189
SAD6 190
SAD5 191
SAD4 192
VSS5 193
SAD3 194
SAD2 195
SAD1 196
SAD0 197
VDD5 198
SALE 199
SRDY 200
SWEB 201
SREB 202
*VDD 203
CS1B 204
CS0B 205
CSDSPB 206
SINT1 207
SINT0 208
VSS3 209
VSS5 210
DASPB 211
CS3 XB 212
CS1 XB 213
DA2 214
DA0 215
DIAGB 216
108 CPUTYPE
107 REVDET
106 TON/EMON2
105 MON/EMON1
104 SBRK
103 WBLIN
102 VSS5
101 EMON3
100 WGATE
99 HFSW
98 VDD3
97 ROPC2
96 ROPC1
95 RESMP1
94 E11TS
93 E11TP
92 PANICIN
91 EPVSS3
90 VCOIN1
89 EPVDD3
88 VCOIN2
87 VCOIN3B
86 VCOIN3
85 CP2
84 CP1
83 EPVSS3
82 RESMP2
81 RRSMP
80 WRSMP
79 EFM3
78 EFCK
77 OFPC
76 EFM2
75 EFM1
74 VSS5
73 RCS
72 RD0
71 RD15
70 RD1
69 RD14
68 RD2
67 VDD
66 RD13
65 RD3
64 RD12
63 RD4
62 RD11
61 VDD3
60 RD5
59 RD10
58 RD6
57 RD9
56 RCLK
55 RD7
1 DA1
2 IOCS16B
3 VDD3
4 DINT
5 DACKB
6 DIORDY
7 DIORB
8 DIOWB
9 DREQ
10 VSS5
11 DD15
12 DD0
13 DD14
14 DD1
15 VDD3
16 DD13
17 DD2
18 DD12
19 DD3
20 VSS5
21 DD11
22 DD4
23 DD10
24 DD5
25 VDD3
26 DD9
27 DD6
28 DD8
29 DD7
30 VSS5
31 VDD
32 DRSTB
33 *RA12
34 *RA13
35 RA4
36 RA3
37 RA5
38 RA2
39 RA6
40 RA1
41 VSS5
42 RA7
43 RA0
44 RA8
45 RA10
46 RA9
47 RA11
48 VSS3
49 RQEB
50 RRAS0B
51 RCAS1B
52 RWE0B
53 RCAS0B
54 RD8

● RL3E804

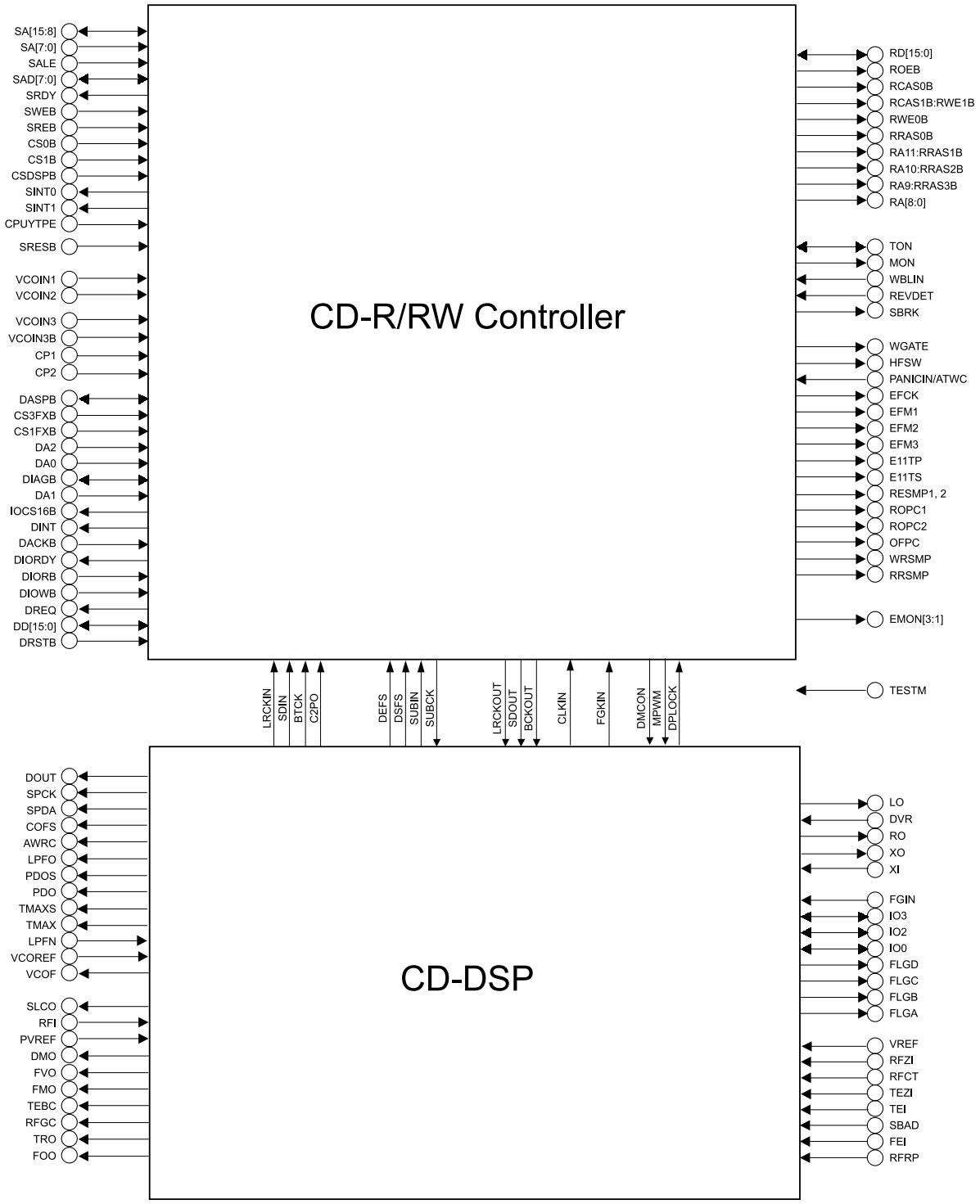
CD-R/RW Controller
SA[15:8]
SA[7:0]
SALE
SAD[7:0]
SRDY
SWEB
SREB
CS0B
CS1B
CSDSPB
SINT0
SINT1
CPUYTPE
SRESB
VCOIN1
VCOIN2
VCOIN3
VCOIN3B
CP1
CP2
DASPB
CS3FXB
CS1FXB
DA2
DA0
DIAGB
DA1
IOCS16B
DINT
DACKB
DIORDY
DIORB
DIOWB
DREQ
DD[15:0]
DRSTB
RD[15:0]
ROEB
RCAS0B
RCAS1B:RWE1B
RWE0B
RRAS0B
RA11:RRAS1B
RA10:RRAS2B
RA9:RRAS3B
RA[8:0]
TON
MON
WBLIN
REVDET
SBRK
WGATE
HFSW
PANICIN/ATWC
EFCK
EFM1
EFM2
EFM3
E11TP
E11TS
RESMP1, 2
ROPC1
ROPC2
OFPC
WRSMP
RRSMP
EMON[3:1]
TESTM
LRCKIN
SDIN
BTCK
C2PO
DEFS
DSFS
SUBIN
SUBCK
LRCKOUT
SDOUT
BCKOUT
CLKIN
FGKIN
DMCON
MPWM
DPLOCK
CD-DSP
DOUT
SPCK
SPDA
COFS
AWRC
LPFO
PDOS
PDO
TMAXS
TMAX
LPFN
VCOREF
VCOF
SLCO
RFI
PVREF
DMO
FVO
FMO
TEBC
RFGC
TRO
FOO
LO
DVR
RO
XO
XI
FGIN
IO3
IO2
IO0
FLGD
FLGC
FLGB
FLGA
VREF
RFZI
RFCT
TEZI
TEI
SBAD
FEI
RFRP

● RL3E804

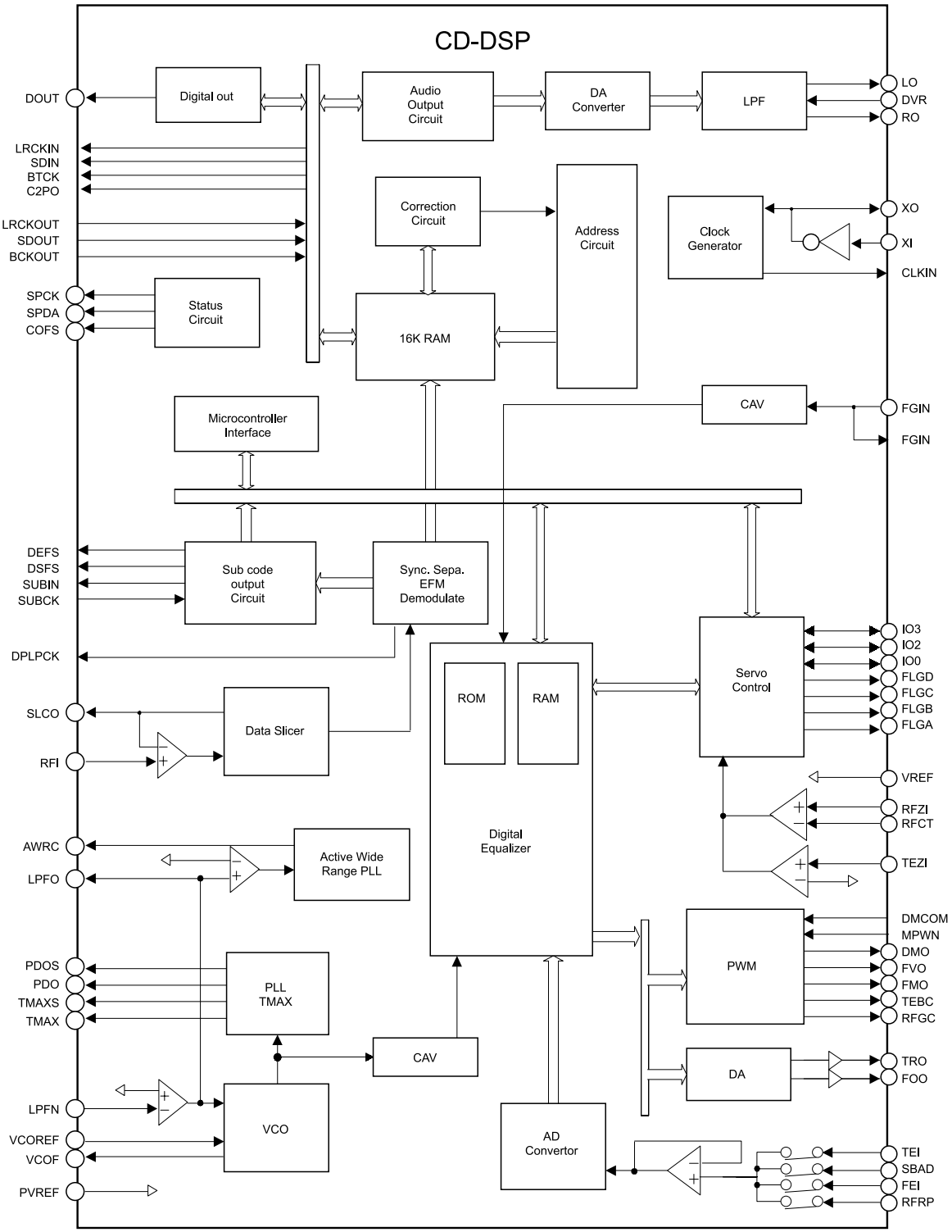
CD-DSP
DOUT
Digital out
Audio Output Circuit
DA Converter
LPF
LO
DVR
RO
LRCKIN
SDIN
BTCK
C2PO
LRCKOUT
SDOUT
BCKOUT
Correction Circuit
Address Circuit
Clock Generator
XO
XI
CLKIN
SPCK
SPDA
COFS
Status Circuit
16K RAM
CAV
FGIN
FGIN
Microcontroller Interface
DEFS
DSFS
SUBIN
SUBCK
Sub code output Circuit
Sync. Sepa. EFM Demodulate
DPLPCK
IO3
IO2
IO0
FLGD
FLGC
FLGB
FLGA
Servo Control
ROM
RAM
Digital Equalizer
SLCO
Data Slicer
RFI
VREF
RFZI
RFCT
TEZI
AWRC
LPFO
Active Wide Range PLL
DMCOM
MPWN
DMO
FVO
FMO
TEBC
RFGC
PWM
PDOS
PDO
TMAXS
TMAX
PLL TMAX
CAV
DA
TRO
FOO
LPFN
VCOREF
VCOF
PVREF
VCO
AD Convertor
TEI
SBAD
FEI
RFRP

● RL3E804

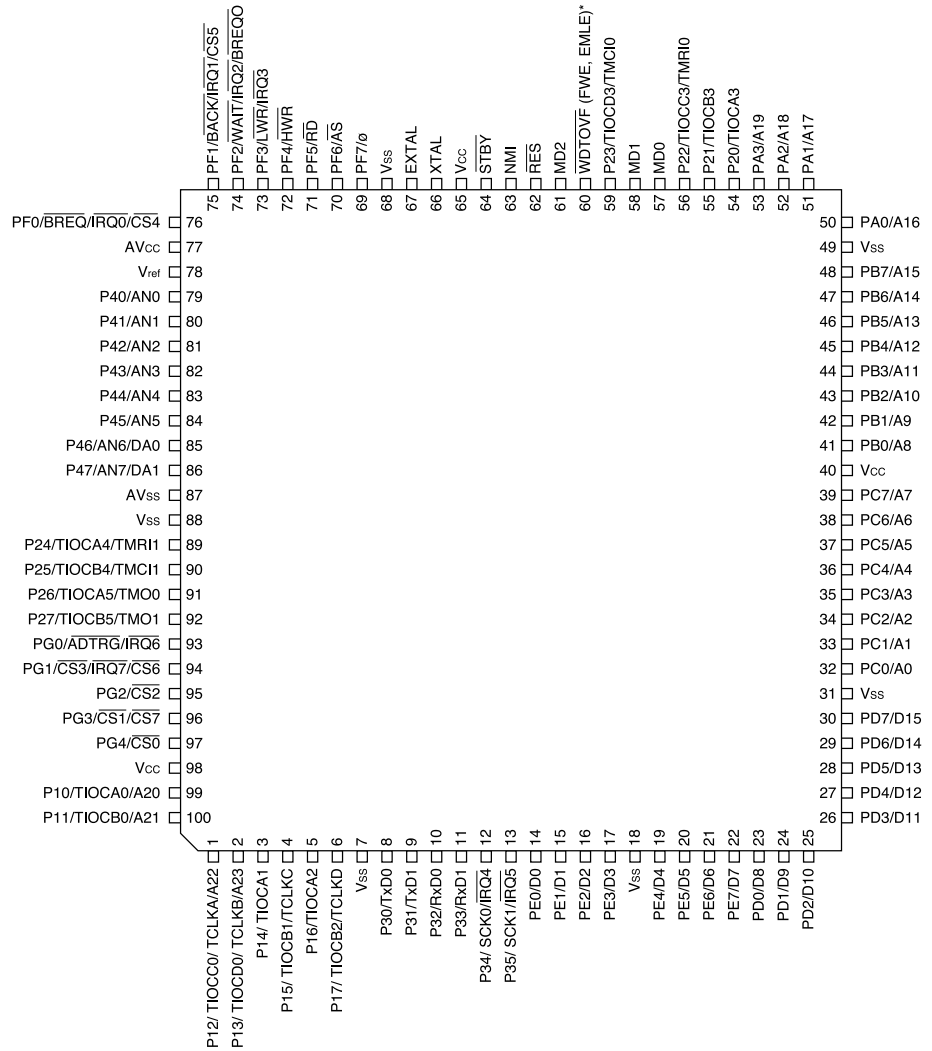

Note: * The FWE pin function is only available on the H8S/2318 F-ZTAT and H8S/2315 F-ZTAT versions.
The EMLE pin function is only available on the H8S/2319 F-ZTAT version.
The WDTOVF pin function is not available on the F-ZTAT versions.

● RL3E804

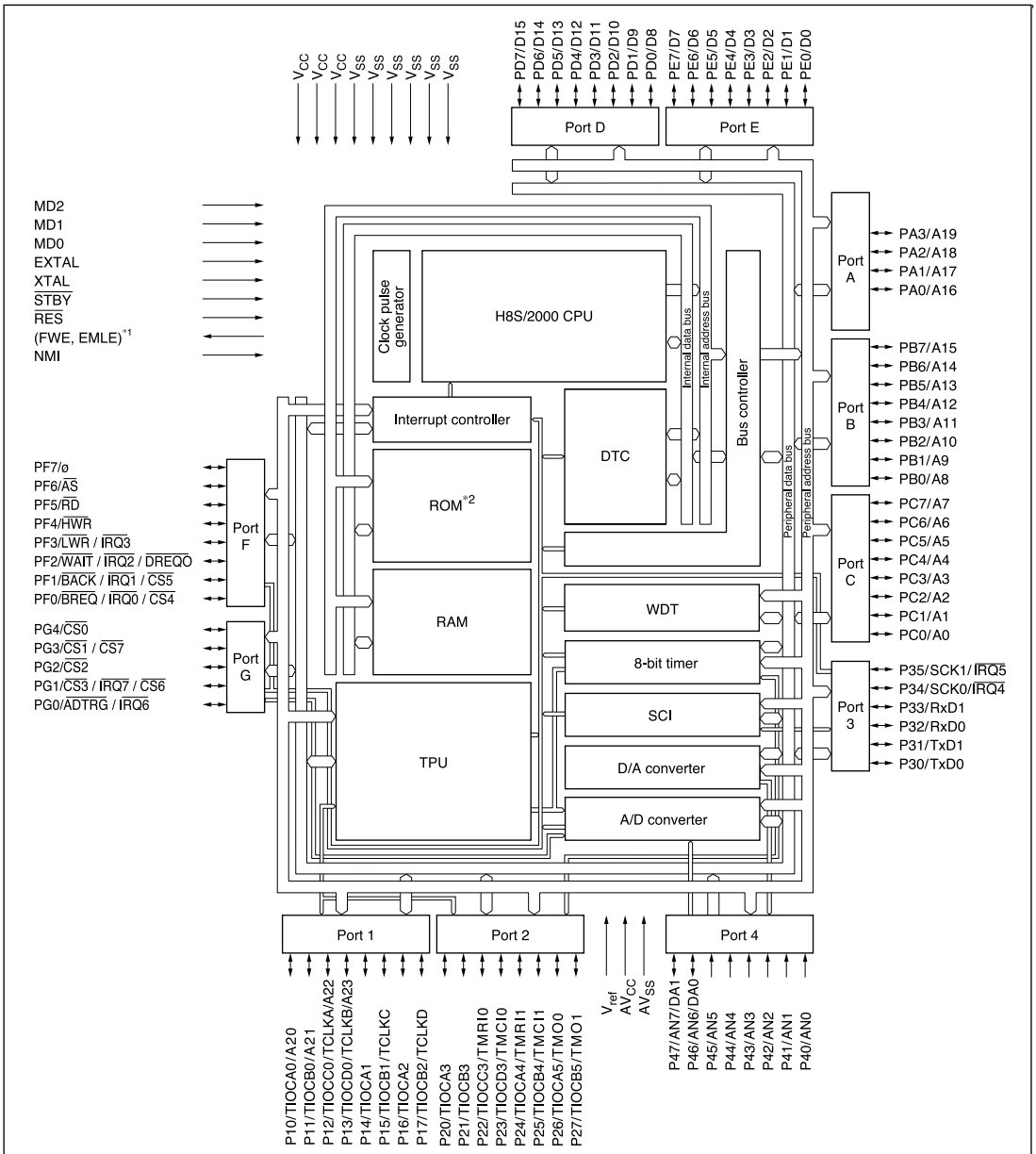

Notes: 1. The FWE pin function is only available on the H8S/2318 F-ZTAT and H8S/2315 F-ZTAT versions.
The EMLE pin function is only available on the H8S/2319 F-ZTAT version.
The WDTOVF pin function is not available on the F-ZTAT versions.
2. ROM is not supported on the ROMless version.

●Pin Functions in Each Operating Mode

Pin No.		Pin Name				
		Mode	Mode	Mode	Mode	Flash Memory Programmer Mode *2
TFP-100B	FP-100A	4	5	6 *1	7 *1	
1	3	P12/TIOCC0/ TCLKA/A22	P12/TIOCC0/ TCLKA/A22	P12/TIOCC0/ TCLKA/A22	P12/TIOCC0/ TCLKA	NC
2	4	P13/TIOCD0/ TCLKB/A23	P13/TIOCD0/ TCLKB/A23	P13/TIOCD0/ TCLKB/A23	P13/TIOCD0/ TCLKB	NC
3	5	P14/TIOCA1	P14/TIOCA1	P14/TIOCA1	P14/TIOCA1	NC
4	6	P15/TIOCB1/ TCLKC	P15/TIOCB1/ TCLKC	P15/TIOCB1/ TCLKC	P15/TIOCB1/ TCLKC	NC
5	7	P16/TIOCA2	P16/TIOCA2	P16/TIOCA2	P16/TIOCA2	NC
6	8	P17/TIOCB2/ TCLKD	P17/TIOCB2/ TCLKD	P17/TIOCB2/ TCLKD	P17/TIOCB2/ TCLKD	NC
7	9	Vss	Vss	Vss	Vss	Vss
8	10	P30/TxD0	P30/TxD0	P30/TxD0	P30/TxD0	NC
9	11	P31/TxD1	P31/TxD1	P31/TxD1	P31/TxD1	NC
10	12	P32/RxD0	P32/RxD0	P32/RxD0	P32/RxD0	NC
11	13	P33/RxD1	P33/RxD1	P33/RxD1	P33/RxD1	NC
12	14	P34/SCK0/$\overline{IRQ4}$	P34/SCK0/$\overline{IRQ4}$	P34/SCK0/$\overline{IRQ4}$	P34/SCK0/$\overline{IRQ4}$	NC
13	15	P35/SCK1/$\overline{IRQ5}$	P35/SCK1/$\overline{IRQ5}$	P35/SCK1/$\overline{IRQ5}$	P35/SCK1/$\overline{IRQ5}$	NC
14	16	PE0/D0	PE0/D0	PE0/D0	PE0	NC
15	17	PE1/D1	PE1/D1	PE1/D1	PE1	NC
16	18	PE2/D2	PE2/D2	PE2/D2	PE2	NC
17	19	PE3/D3	PE3/D3	PE3/D3	PE3	NC
18	20	Vss	Vss	Vss	Vss	Vss
19	21	PE4/D4	PE4/D4	PE4/D4	PE4	NC
20	22	PE5/D5	PE5/D5	PE5/D5	PE5	NC
21	23	PE6/D6	PE6/D6	PE6/D6	PE6	NC
22	24	PE7/D7	PE7/D7	PE7/D7	PE7	NC
23	25	D8	D8	D8	PD0	FO0
24	26	D9	D9	D9	PD1	FO1
25	27	D10	D10	D10	PD2	FO2
26	28	D11	D11	D11	PD3	FO3
27	29	D12	D12	D12	PD4	FO4
28	30	D13	D13	D13	PD5	FO5
29	31	D14	D14	D14	PD6	FO6
30	32	D15	D15	D15	PD7	FO7
31	33	Vss	Vss	Vss	Vss	Vss
32	34	A0	A0	PC0/A0	PC0	A0
33	35	A1	A1	PC1/A1	PC1	A1
34	36	A2	A2	PC2/A2	PC2	A2
35	37	A3	A3	PC3/A3	PC3	A3
36	38	A4	A4	PC4/A4	PC4	A4
37	39	A5	A5	PC5/A5	PC5	A5
38	40	A6	A6	PC6/A6	PC6	A6
39	41	A7	A7	PC7/A7	PC7	A7
40	42	Vcc	Vcc	Vcc	Vcc	Vcc
41	43	A8	A8	PB0/A8	PB0	A8
42	44	A9	A9	PB1/A9	PB1	A9
43	45	A10	A10	PB2/A10	PB2	A10
44	46	A11	A11	PB3/A11	PB3	A11
45	47	A12	A12	PB4/A12	PB4	A12
46	48	A13	A13	PB5/A13	PB5	A13
47	49	A14	A14	PB6/A14	PB6	A14
48	50	A15	A15	PB7/A15	PB7	A15

●Pin Functions in Each Operating Mode

Pin No.		Pin Name				
		Mode	Mode	Mode	Mode	Flash Memory Programmer Mode *2
TFP-100B	FP-100A	4	5	6 *1	7 *1	
49	51	Vss	Vss	Vss	Vss	Vss
50	52	A16	A16	PA0/A16	PA0	A16
51	53	A17	A17	PA1/A17	PA1	A17
52	54	A18	A18	PA2/A18	PA2	A18
53	55	A19	A19	PA3/A19	PA3	NC
54	56	P20/TIOCA3	P20/TIOCA3	P20/TIOCA3	P20/TIOCA3	$\overline{OE}$
55	57	P21/TIOCB3	P21/TIOCB3	P21/TIOCB3	P21/TIOCB3	$\overline{CE}$
56	58	P22/TIOCC3/ TMRI0	P22/TIOCC3/ TMRI0	P22/TIOCC3/ TMRI0	P22/TIOCC3/ TMRI0	$\overline{WE}$
57	59	MD0	MD0	MD0	MD0	Vss
58	60	MD1	MD1	MD1	MD1	Vss
59	61	P23/TIOCD3/ TMCI0	P23/TIOCD3/ TMCI0	P23/TIOCD3/ TMCI0	P23/TIOCD3/ TMCI0	Vcc
60	62	$\overline{WDTOVF}$ (FWE, EMLE)*3	$\overline{WDTOVF}$ (FWE, EMLE)*3	$\overline{WDTOVF}$ (FWE, EMLE)*3	$\overline{WDTOVF}$ (FWE, EMLE)*3	FWE
61	63	MD2	MD2	MD2	MD2	Vss
62	64	$\overline{RES}$	$\overline{RES}$	$\overline{RES}$	$\overline{RES}$	$\overline{RES}$
63	65	NMI	NMI	NMI	NMI	Vcc
64	66	$\overline{STBY}$	$\overline{STBY}$	$\overline{STBY}$	$\overline{STBY}$	Vcc
65	67	Vcc	Vcc	Vcc	Vcc	Vcc
66	68	XTAL	XTAL	XTAL	XTAL	XTAL
67	69	EXTAL	EXTAL	EXTAL	EXTAL	EXTAL
68	70	Vss	Vss	Vss	Vss	Vss
69	71	PF7/ø	PF7/ø	PF7/ø	PF7/ø	NC
70	72	PF6/$\overline{AS}$	PF6/$\overline{AS}$	PF6/$\overline{AS}$	PF6	NC
71	73	$\overline{RD}$	$\overline{RD}$	$\overline{RD}$	PF5	NC
72	74	$\overline{HWR}$	$\overline{HWR}$	$\overline{HWR}$	PF4	NC
73	75	PF3/$\overline{LWR}$/$\overline{IRQ3}$	PF3/$\overline{LWR}$/$\overline{IRQ3}$	PF3/$\overline{LWR}$/$\overline{IRQ3}$	PF3/$\overline{IRQ3}$	NC
74	76	PF2/$\overline{WAIT}$/ $\overline{IRQ2}$/$\overline{DREQO}$	PF2/$\overline{WAIT}$/ $\overline{IRQ2}$/$\overline{DREQO}$	PF2/$\overline{WAIT}$/ $\overline{IRQ2}$/$\overline{DREQO}$	PF2/$\overline{IRQ2}$	Vcc
75	77	PF1/$\overline{BACK}$/ $\overline{IRQ1}$/$\overline{CS5}$	PF1/$\overline{BACK}$/ $\overline{IRQ1}$/$\overline{CS5}$	PF1/$\overline{BACK}$/ $\overline{IRQ1}$/$\overline{CS5}$	PF1/$\overline{IRQ1}$	Vss
76	78	PF0/$\overline{BREQ}$/ $\overline{IRQ0}$/$\overline{CS4}$	PF0/$\overline{BREQ}$/ $\overline{IRQ0}$/$\overline{CS4}$	PF0/$\overline{BREQ}$/ $\overline{IRQ0}$/$\overline{CS4}$	PF0/$\overline{IRQ0}$	Vss
77	79	AVcc	AVcc	AVcc	AVCC	Vcc
78	80	Vref	Vref	Vref	Vref	Vcc
79	81	P40/AN0	P40/AN0	P40/AN0	P40/AN0	NC
80	82	P41/AN1	P41/AN1	P41/AN1	P41/AN1	NC
81	83	P42/AN2	P42/AN2	P42/AN2	P42/AN2	NC
82	84	P43/AN3	P43/AN3	P43/AN3	P43/AN3	NC
83	85	P44/AN4	P44/AN4	P44/AN4	P44/AN4	NC
84	86	P45/AN5	P45/AN5	P45/AN5	P45/AN5	NC
85	87	P46/AN6/DA0	P46/AN6/DA0	P46/AN6/DA0	P46/AN6/DA0	NC
86	88	P47/AN7/DA1	P47/AN7/DA1	P47/AN7/DA1	P47/AN7/DA1	NC
87	89	AVss	AVss	AVss	AVss	Vss
88	90	Vss	Vss	Vss	Vss	Vss
89	91	P24/TIOCA4/ TMRI1	P24/TIOCA4/ TMRI1	P24/TIOCA4/ TMRI1	P24/TIOCA4/ TMRI1	NC
90	92	P25/TIOCB4/ TMCI1	P25/TIOCB4/ TMCI1	P25/TIOCB4/ TMCI1	P25/TIOCB4/ TMCI1	Vss
91	93	P26/TIOCA5/ TMO0	P26/TIOCA5/ TMO0	P26/TIOCA5/ TMO0	P26/TIOCA5/ TMO0	NC

●Pin Functions in Each Operating Mode

Pin No.		Pin Name				
		Mode	Mode	Mode	Mode	Flash Memory Programmer Mode *2
TFP-100B	FP-100A	4	5	6 *1	7 *1	
92	94	P27/TIOCB5/ TMO1	P27/TIOCB5/ TMO1	P27/TIOCB5/ TMO1	P27/TIOCB5/ TMO1	NC
93	95	PG0/$\overline{\text{IRQ6}}$/ $\overline{\text{ADTRG}}$	PG0/$\overline{\text{IRQ6}}$/ $\overline{\text{ADTRG}}$	PG0/$\overline{\text{IRQ6}}$/ $\overline{\text{ADTRG}}$	PG0/$\overline{\text{IRQ6}}$/ $\overline{\text{ADTRG}}$	NC
94	96	PG1/$\overline{\text{CS3}}$/ $\overline{\text{IRQ7}}$/$\overline{\text{CS6}}$	PG1/$\overline{\text{CS3}}$/ $\overline{\text{IRQ7}}$/$\overline{\text{CS6}}$	PG1/$\overline{\text{CS3}}$/ $\overline{\text{IRQ7}}$/$\overline{\text{CS6}}$	PG1/$\overline{\text{IRQ7}}$	NC
95	97	PG2/$\overline{\text{CS2}}$	PG2/$\overline{\text{CS2}}$	PG2/$\overline{\text{CS2}}$	PG2	NC
96	98	PG3/CS1/$\overline{\text{CS7}}$	PG3/CS1/$\overline{\text{CS7}}$	PG3/CS1/$\overline{\text{CS7}}$	PG3	NC
97	99	PG4/$\overline{\text{CS0}}$	PG4/$\overline{\text{CS0}}$	PG4/$\overline{\text{CS0}}$	PG4	NC
98	100	Vcc	Vcc	Vcc	Vcc	Vcc
99	1	P10/TIOCA0/A20	P10/TIOCA0/A20	P10/TIOCA0/A20	P10/TIOCA0	NC
100	2	P11/TIOCB0/A21	P11/TIOCB0/A21	P11/TIOCB0/A21	P11/TIOCB0	NC

Notes : 1. Only modes 4 and 5 are available on the ROMless version.
2. Flash memory programmer mode information is preliminary.
3. The FWE pin function is only available on the H8S/2318 F-ZTAT and H8S/2315 F-ZTAT versions.
The EMLE pin function is only available on the H8S/2319 F-ZTAT version.
It cannot be used as a $\overline{\text{WDTOVF}}$ pin on the F-ZTAT version.

● BD7902CFS

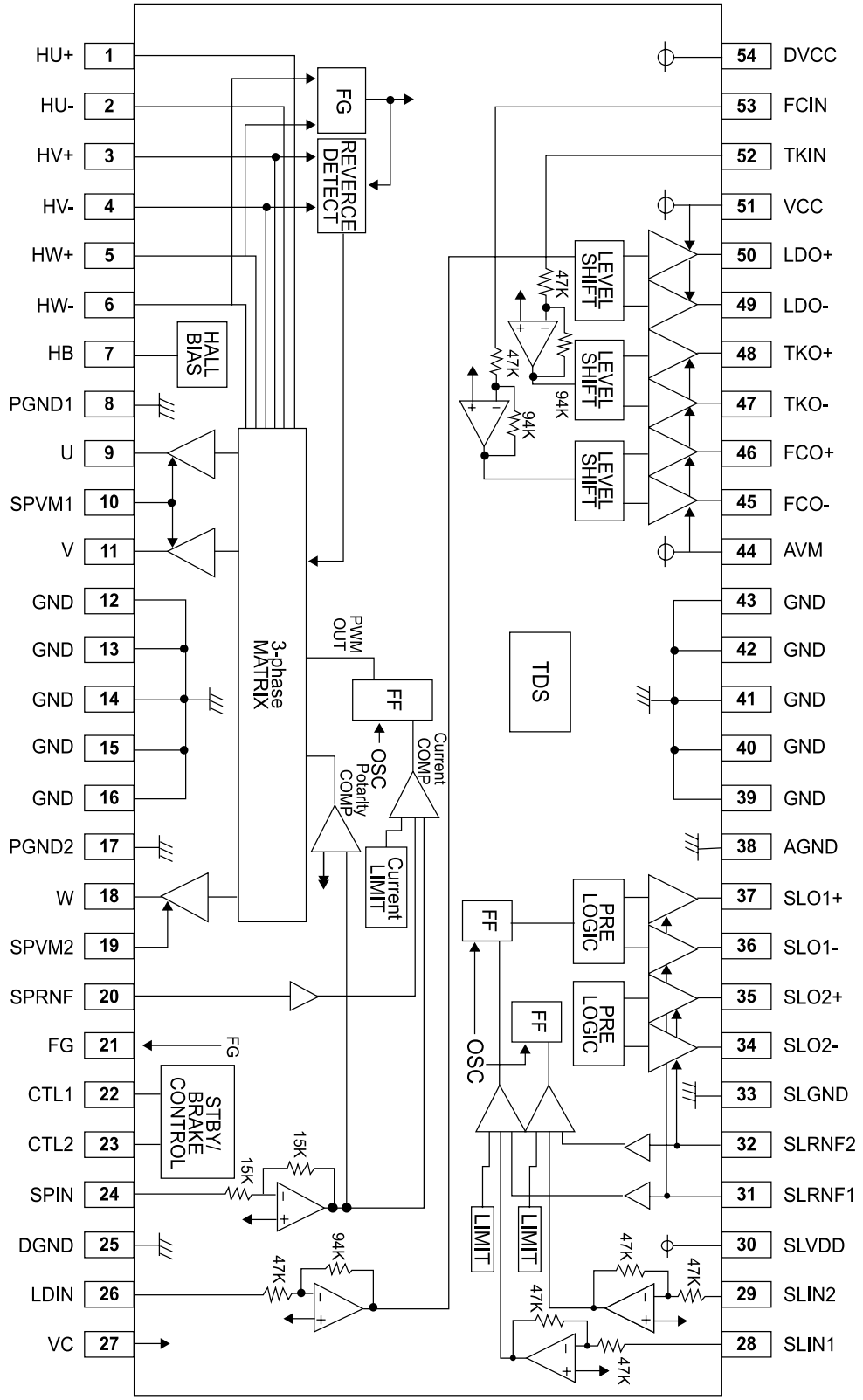
HU+ 1
HU- 2
HV+ 3
HV- 4
HW+ 5
HW- 6
HB 7
PGND1 8
U 9
SPVM1 10
V 11
GND 12
GND 13
GND 14
GND 15
GND 16
PGND2 17
W 18
SPVM2 19
SPRNF 20
FG 21
CTL1 22
CTL2 23
SPIN 24
DGND 25
LDIN 26
VC 27
54 DVCC
53 FCIN
52 TKIN
51 VCC
50 LDO+
49 LDO-
48 TKO+
47 TKO-
46 FCO+
45 FCO-
44 AVM
43 GND
42 GND
41 GND
40 GND
39 GND
38 AGND
37 SLO1+
36 SLO1-
35 SLO2+
34 SLO2-
33 SLGND
32 SLRNF2
31 SLRNF1
30 SLVDD
29 SLIN2
28 SLIN1
FG
REVERCE DETECT
HALL BIAS
3-phase MATRIX
PWM OUT
FF
OSC
Current COMP
Polarity COMP
Current LIMIT
STBY/ BRAKE CONTROL
15K
94K
47K
LEVEL SHIFT
TDS
PRE LOGIC
LIMIT

● BD7902CFS

Pin Descriptions

Terminal	Symbol	Terminal Function	Terminal	Symbol	Terminal Function
1	HU+	Hall amp.U positive input	54	DVCC	PWM block control power supply
2	HU-	Hall amp.U negative input	53	FCIN	Focus driver input
3	HV+	Hall amp.U positive input	52	TKIN	Tracking driver input
4	HV-	Hall amp.U negative input	51	VCC	BTL pre and Loading power supply
5	HW+	Hall amp.U positive input	50	LDO+	Loading driver positive output
6	HW-	Hall amp.U negative input	49	LDO-	Loading driver negative output
7	HB	Hall bias	48	TKO+	Tracking driver positive output
8	PGND1	Spindle driver power ground1	47	TKO-	Tracking driver negative output
9	U	Spindle driver output U	46	FCO+	Focus driver positive output
10	SPVM1	Spindle driver power supply1	45	FCO-	Focus driver negative output
11	V	Spindle driver output V	44	AVM	Actuator driver block power supply
12	GND	GND	43	GND	GND
13	GND	GND	42	GND	GND
14	GND	GND	41	GND	GND
15	GND	GND	40	GND	GND
16	GND	GND	39	GND	GND
17	PGND2	Spindle driver power ground 2	38	AGND	Ground
18	W	Spindle driver output W	37	SLO1+	Sled drive 1 positive output
19	SPVM2	Spindle driver power supply 2	36	SLO1-	Sled drive 1 negative output
20	SPRNF	Spindle driver ourrent sense	35	SLO2+	Sled drive 2 positive output
21	FG	Frequency generator output	34	SLO2-	Sled drive 2 negative output
22	CTL1	Driver logic control input1	33	SLGND	Sled driver power ground
23	CTL2	Driver logic control input2	32	SLRNF2	Sled driver 2 current sense
24	SPIN	Spindle driver input	31	SLRNF1	Sled driver 1 current sense
25	DGND	PWM block pre-ground	30	SLVDD	Sled driver PowerMos pre-supply
26	LDIN	Loading driver input	29	SLIN2	Sled driver 2 input
27	VC	Reference voltage input	28	SLIN1	Sled driver 1 input

●Electrical Parts List

LOC	CODE NO	DESCRIPTION
B501	3301-001082	“CORE-FERRITE BEAD;AB,60OHM,3.2X2.5X1.3MM”
B502	3301-001082	“CORE-FERRITE BEAD;AB,60OHM,3.2X2.5X1.3MM”
B503	3301-001082	“CORE-FERRITE BEAD;AB,60OHM,3.2X2.5X1.3MM”
B504	3301-001082	“CORE-FERRITE BEAD;AB,60OHM,3.2X2.5X1.3MM”
B505	3301-001082	“CORE-FERRITE BEAD;AB,60OHM,3.2X2.5X1.3MM”
C101	2203-000888	“C-CERAMIC,CHIP;4.7nF,10%,50V,X7R,TP,1608”
C102	2203-000972	“C-CERAMIC,CHIP;47nF,10%,16V,X7R,TP,1608”
C103	2203-000236	“C-CERAMIC,CHIP;0.1nF,5%,50V,NP0,TP,1608”
C104	2203-001724	“C-CERAMIC,CHIP;4700NF,+80-20%,16V,Y5V,TP”
C105	2203-000440	“C-CERAMIC,CHIP;1nF,10%,50V,X7R,TP,1608,-”
C106	2203-000888	“C-CERAMIC,CHIP;4.7nF,10%,50V,X7R,TP,1608”
C107	2203-000888	“C-CERAMIC,CHIP;4.7nF,10%,50V,X7R,TP,1608”
C108	2203-001607	“C-CERAMIC,CHIP;0.22nF,5%,50V,NP0,TP,1608”
C109	2203-000783	“C-CERAMIC,CHIP;0.33nF,5%,50V,NP0,TP,1608”
C110	2203-001656	“C-CERAMIC,CHIP;0.47nF,5%,50V,NP0,TP,1608”
C111	2404-001020	“C-TA,CHIP;10uF,20%,10V,GP,TP,3216,3.2”
C112	2203-000189	“C-CERAMIC,CHIP;100nF,+80-20%,25V,Y5V,TP,”
C113	2402-000136	“C-AL,SMD;22uF,20%,16V,GP,TP,5.3x5.3x5.2”
C114	2203-000257	“C-CERAMIC,CHIP;10nF,10%,50V,X7R,TP,1608”
C115	2203-001630	“C-CERAMIC,CHIP;330nF,+80-20%,16V,Y5V,TP,”
C116	2203-000189	“C-CERAMIC,CHIP;100nF,+80-20%,25V,Y5V,TP,”
C117	2203-002398	“C-CERAMIC,CHIP;22nF,10%,50V,X7R,TP,1608”
C118	2203-000257	“C-CERAMIC,CHIP;10nF,10%,50V,X7R,TP,1608”
C119	2203-000257	“C-CERAMIC,CHIP;10nF,10%,50V,X7R,TP,1608”
C120	2402-000112	“C-AL,SMD;10uF,20%,16V,GP,TP,3.3x3.3x5.4”
C122	2203-000440	“C-CERAMIC,CHIP;1nF,10%,50V,X7R,TP,1608,-”
C123	2203-000440	“C-CERAMIC,CHIP;1nF,10%,50V,X7R,TP,1608,-”
C124	2402-000112	“C-AL,SMD;10uF,20%,16V,GP,TP,3.3x3.3x5.4”
C126	2203-000236	“C-CERAMIC,CHIP;0.1nF,5%,50V,NP0,TP,1608”
C127	2203-001724	“C-CERAMIC,CHIP;4700NF,+80-20%,16V,Y5V,TP”
C128	2203-000236	“C-CERAMIC,CHIP;0.1nF,5%,50V,NP0,TP,1608”
C129	2203-000236	“C-CERAMIC,CHIP;0.1nF,5%,50V,NP0,TP,1608”
C131	2404-001020	“C-TA,CHIP;10uF,20%,10V,GP,TP,3216,3.2”
C133	2404-001020	“C-TA,CHIP;10uF,20%,10V,GP,TP,3216,3.2”
C135	2203-000357	“C-CERAMIC,CHIP;0.15nF,5%,50V,NP0,TP,1608”
C136	2203-000357	“C-CERAMIC,CHIP;0.15nF,5%,50V,NP0,TP,1608”
C137	2203-000783	“C-CERAMIC,CHIP;0.33nF,5%,50V,NP0,TP,1608”
C138	2203-000189	“C-CERAMIC,CHIP;100nF,+80-20%,25V,Y5V,TP,”
C139	2404-001131	“C-TA,CHIP;22UF,10%,10V,GP,TP,3528”
C140	2203-000189	“C-CERAMIC,CHIP;100nF,+80-20%,25V,Y5V,TP,”
C141	2404-001131	“C-TA,CHIP;22UF,10%,10V,GP,TP,3528”
C142	2203-000531	“C-CERAMIC,CHIP;2.7nF,10%,50V,X7R,TP,1608”
C143	2203-005065	“C-CERAMIC,CHIP;1000nF,+80-20%,10V,Y5V,TP”
C144	2203-001724	“C-CERAMIC,CHIP;4700NF,+80-20%,16V,Y5V,TP”
C145	2203-001598	“C-CERAMIC,CHIP;2200nF,+80-20%,16V,Y5V,TP”
C146	2203-000189	“C-CERAMIC,CHIP;100nF,+80-20%,25V,Y5V,TP,”
C148	2203-000189	“C-CERAMIC,CHIP;100nF,+80-20%,25V,Y5V,TP,”
C149	2203-000189	“C-CERAMIC,CHIP;100nF,+80-20%,25V,Y5V,TP,”
C150	2203-001402	“C-CERAMIC,CHIP;220nF,+80-20%,16V,Y5V,TP,”
C151	2203-001126	“C-CERAMIC,CHIP;0.68nF,10%,50V,X7R,TP,160”
C199	2203-001086	“C-CERAMIC,CHIP;0.005nF,0.25pF,50V,NP0,TP”
C201	2203-000257	“C-CERAMIC,CHIP;10nF,10%,50V,X7R,TP,1608”

●Electrical Parts List

LOC	CODE NO	DESCRIPTION
C202	2203-000257	“C-CERAMIC,CHIP;10nF,10%,50V,X7R,TP,1608”
C203	2203-000257	“C-CERAMIC,CHIP;10nF,10%,50V,X7R,TP,1608”
C204	2203-000257	“C-CERAMIC,CHIP;10nF,10%,50V,X7R,TP,1608”
C205	2203-000257	“C-CERAMIC,CHIP;10nF,10%,50V,X7R,TP,1608”
C206	2203-000257	“C-CERAMIC,CHIP;10nF,10%,50V,X7R,TP,1608”
C207	2203-001103	“C-CERAMIC,CHIP;6.8nF,10%,50V,X7R,TP,1608”
C208	2203-005342	“C-CERAMIC,CHIP;82nF,10%,16V,X7R,TP,1608”
C209	2203-002085	“C-CERAMIC,CHIP;56nF,10%,50V,X7R,TP,2012,”
C210	2404-001020	“C-TA,CHIP;10uF,20%,10V,GP,TP,3216,3.2”
C211	2203-000189	“C-CERAMIC,CHIP;100nF,+80-20%,25V,Y5V,TP,”
C212	2203-000041	“C-CERAMIC,CHIP;0.01nF,0.25pF,50V,NP0,TP,”
C213	2203-000041	“C-CERAMIC,CHIP;0.01nF,0.25pF,50V,NP0,TP,”
C214	2203-000041	“C-CERAMIC,CHIP;0.01nF,0.25pF,50V,NP0,TP,”
C215	2203-000041	“C-CERAMIC,CHIP;0.01nF,0.25pF,50V,NP0,TP,”
C216	2203-000257	“C-CERAMIC,CHIP;10nF,10%,50V,X7R,TP,1608”
C217	2203-000236	“C-CERAMIC,CHIP;0.1nF,5%,50V,NP0,TP,1608”
C218	2203-000189	“C-CERAMIC,CHIP;100nF,+80-20%,25V,Y5V,TP,”
C220	2203-000257	“C-CERAMIC,CHIP;10nF,10%,50V,X7R,TP,1608”
C221	2203-001724	“C-CERAMIC,CHIP;4700NF,+80-20%,16V,Y5V,TP”
C223	2203-000189	“C-CERAMIC,CHIP;100nF,+80-20%,25V,Y5V,TP,”
C224	2203-000257	“C-CERAMIC,CHIP;10nF,10%,50V,X7R,TP,1608”
C225	2203-002398	“C-CERAMIC,CHIP;22nF,10%,50V,X7R,TP,1608”
C226	2203-000440	“C-CERAMIC,CHIP;1nF,10%,50V,X7R,TP,1608,-”
C227	2203-000783	“C-CERAMIC,CHIP;0.33nF,5%,50V,NP0,TP,1608”
C228	2203-001052	“C-CERAMIC,CHIP;0.56nF,10%,50V,X7R,TP,160”
C229	2203-000783	“C-CERAMIC,CHIP;0.33nF,5%,50V,NP0,TP,1608”
C230	2203-000189	“C-CERAMIC,CHIP;100nF,+80-20%,25V,Y5V,TP,”
C231	2203-000372	“C-CERAMIC,CHIP;15nF,10%,50V,X7R,TP,1608,”
C232	2203-000372	“C-CERAMIC,CHIP;15nF,10%,50V,X7R,TP,1608,”
C233	2203-000972	“C-CERAMIC,CHIP;47nF,10%,16V,X7R,TP,1608”
C234	2203-000257	“C-CERAMIC,CHIP;10nF,10%,50V,X7R,TP,1608”
C235	2203-000041	“C-CERAMIC,CHIP;0.01nF,0.25pF,50V,NP0,TP,”
C236	2203-000041	“C-CERAMIC,CHIP;0.01nF,0.25pF,50V,NP0,TP,”
C237	2404-001020	“C-TA,CHIP;10uF,20%,10V,GP,TP,3216,3.2”
C238	2404-001020	“C-TA,CHIP;10uF,20%,10V,GP,TP,3216,3.2”
C240	2203-001724	“C-CERAMIC,CHIP;4700NF,+80-20%,16V,Y5V,TP”
C241	2203-000189	“C-CERAMIC,CHIP;100nF,+80-20%,25V,Y5V,TP,”
C242	2203-000257	“C-CERAMIC,CHIP;10nF,10%,50V,X7R,TP,1608”
C243	2203-001598	“C-CERAMIC,CHIP;2200nF,+80-20%,16V,Y5V,TP”
C244	2203-000257	“C-CERAMIC,CHIP;10nF,10%,50V,X7R,TP,1608”
C245	2404-001020	“C-TA,CHIP;10uF,20%,10V,GP,TP,3216,3.2”
C246	2404-001020	“C-TA,CHIP;10uF,20%,10V,GP,TP,3216,3.2”
C247	2203-000140	“C-CERAMIC,CHIP;1.5nF,10%,50V,X7R,TP,1608”
C248	2203-000140	“C-CERAMIC,CHIP;1.5nF,10%,50V,X7R,TP,1608”
C249	2203-000257	“C-CERAMIC,CHIP;10nF,10%,50V,X7R,TP,1608”
C250	2203-000257	“C-CERAMIC,CHIP;10nF,10%,50V,X7R,TP,1608”
C251	2404-001020	“C-TA,CHIP;10uF,20%,10V,GP,TP,3216,3.2”
C301	2203-001683	“C-CERAMIC,CHIP;0.068nF,5%,50V,NP0,TP,160”
C302	2203-001656	“C-CERAMIC,CHIP;0.47nF,5%,50V,NP0,TP,1608”
C303	2203-001598	“C-CERAMIC,CHIP;2200nF,+80-20%,16V,Y5V,TP”
C304	2203-000783	“C-CERAMIC,CHIP;0.33nF,5%,50V,NP0,TP,1608”
C305	2203-000257	“C-CERAMIC,CHIP;10nF,10%,50V,X7R,TP,1608”
C306	2203-000041	“C-CERAMIC,CHIP;0.01nF,0.25pF,50V,NP0,TP,”
C307	2203-000041	“C-CERAMIC,CHIP;0.01nF,0.25pF,50V,NP0,TP,”
C308	2203-000257	“C-CERAMIC,CHIP;10nF,10%,50V,X7R,TP,1608”
C309	2203-001607	“C-CERAMIC,CHIP;0.22nF,5%,50V,NP0,TP,1608”
C310	2203-000715	“C-CERAMIC,CHIP;3.3nF,10%,50V,X7R,TP,1608”

●Electrical Parts List

LOC	CODE NO	DESCRIPTION
C311	2203-000783	“C-CERAMIC,CHIP;0.33nF,5%,50V,NP0,TP,1608”
C312	2203-000783	“C-CERAMIC,CHIP;0.33nF,5%,50V,NP0,TP,1608”
C313	2203-000140	“C-CERAMIC,CHIP;1.5nF,10%,50V,X7R,TP,1608”
C314	2203-000815	“C-CERAMIC,CHIP;0.033nF,5%,50V,NP0,TP,160”
C315	2203-000888	“C-CERAMIC,CHIP;4.7nF,10%,50V,X7R,TP,1608”
C316	2203-000783	“C-CERAMIC,CHIP;0.33nF,5%,50V,NP0,TP,1608”
C317	2203-000189	“C-CERAMIC,CHIP;100nF,+80-20%,25V,Y5V,TP,”
C318	2203-000189	“C-CERAMIC,CHIP;100nF,+80-20%,25V,Y5V,TP,”
C319	2203-001607	“C-CERAMIC,CHIP;0.22nF,5%,50V,NP0,TP,1608”
C320	2203-001607	“C-CERAMIC,CHIP;0.22nF,5%,50V,NP0,TP,1608”
C321	2203-000257	“C-CERAMIC,CHIP;10nF,10%,50V,X7R,TP,1608”
C322	2203-000783	“C-CERAMIC,CHIP;0.33nF,5%,50V,NP0,TP,1608”
C323	2203-000041	“C-CERAMIC,CHIP;0.01nF,0.25pF,50V,NP0,TP,”
C324	2203-001724	“C-CERAMIC,CHIP;4700NF,+80-20%,16V,Y5V,TP”
C401	2402-001042	“C-AL,SMD;100uF,20%,16V,GP,TP,6.6x6.6x5.”
C402	2203-000189	“C-CERAMIC,CHIP;100nF,+80-20%,25V,Y5V,TP,”
C403	2203-001598	“C-CERAMIC,CHIP;2200nF,+80-20%,16V,Y5V,TP”
C405	2203-001598	“C-CERAMIC,CHIP;2200nF,+80-20%,16V,Y5V,TP”
C406	2203-000888	“C-CERAMIC,CHIP;4.7nF,10%,50V,X7R,TP,1608”
C407	2203-000888	“C-CERAMIC,CHIP;4.7nF,10%,50V,X7R,TP,1608”
C408	2203-000189	“C-CERAMIC,CHIP;100nF,+80-20%,25V,Y5V,TP,”
C409	2402-001042	“C-AL,SMD;100uF,20%,16V,GP,TP,6.6x6.6x5.”
C410	2203-000189	“C-CERAMIC,CHIP;100nF,+80-20%,25V,Y5V,TP,”
C411	2203-000189	“C-CERAMIC,CHIP;100nF,+80-20%,25V,Y5V,TP,”
C412	2203-000189	“C-CERAMIC,CHIP;100nF,+80-20%,25V,Y5V,TP,”
C413	2203-000189	“C-CERAMIC,CHIP;100nF,+80-20%,25V,Y5V,TP,”
C414	2203-000189	“C-CERAMIC,CHIP;100nF,+80-20%,25V,Y5V,TP,”
C419	2203-000189	“C-CERAMIC,CHIP;100nF,+80-20%,25V,Y5V,TP,”
C501	2203-000189	“C-CERAMIC,CHIP;100nF,+80-20%,25V,Y5V,TP,”
C502	2203-000189	“C-CERAMIC,CHIP;100nF,+80-20%,25V,Y5V,TP,”
C503	2402-001042	“C-AL,SMD;100uF,20%,16V,GP,TP,6.6x6.6x5.”
C504	2203-000189	“C-CERAMIC,CHIP;100nF,+80-20%,25V,Y5V,TP,”
C505	2203-001724	“C-CERAMIC,CHIP;4700NF,+80-20%,16V,Y5V,TP”
C506	2402-001042	“C-AL,SMD;100uF,20%,16V,GP,TP,6.6x6.6x5.”
C507	2203-000189	“C-CERAMIC,CHIP;100nF,+80-20%,25V,Y5V,TP,”
C508	2203-000189	“C-CERAMIC,CHIP;100nF,+80-20%,25V,Y5V,TP,”
C509	2203-000189	“C-CERAMIC,CHIP;100nF,+80-20%,25V,Y5V,TP,”
C510	2203-000140	“C-CERAMIC,CHIP;1.5nF,10%,50V,X7R,TP,1608”
C511	2203-001724	“C-CERAMIC,CHIP;4700NF,+80-20%,16V,Y5V,TP”
C512	2203-000257	“C-CERAMIC,CHIP;10nF,10%,50V,X7R,TP,1608”
C513	2203-000257	“C-CERAMIC,CHIP;10nF,10%,50V,X7R,TP,1608”
C514	2203-000189	“C-CERAMIC,CHIP;100nF,+80-20%,25V,Y5V,TP,”
C515	2404-001270	“C-TA,CHIP;47UF,20%,10V,-,TP,3216”
C516	2203-000189	“C-CERAMIC,CHIP;100nF,+80-20%,25V,Y5V,TP,”
CN30	3708-001524	“CONNECTOR-FPC/FFC/PIC;13P,1mm,SMD-A,SN”
CN40	3708-001606	“CONNECTOR-FPC/FFC/PIC;15P,1MM,SMD-A,SN”
D501	0407-000123	“DIODE-ARRAY;DAN202K,80V,100MA,CA2-3,SOT-”
IC102	1002-001262	“IC-D/A CONVERTER;BU2505FV,10BIT,SOIC,20P”
IC202B	1105-001261	“IC-DRAM;12L1616A,16BIT,TSOP,50P,400MIL”
IC203	0801-002414	“IC-CMOS LOGIC;7W53,MULTI/DEMULTIPLEXER,S”
IC402	1201-001001	“IC-OP AMP;2100,SOP,8P,250MIL,DUAL,80mV/V”
IC501	1203-001394	“IC-VOL. DETECTOR;9735,SOT-23,3P,-,PLASTI”
JP101	2007-000070	“R-CHIP;0ohm,5%,1/16W,DA,TP,1608”
JP201	2007-000070	“R-CHIP;0ohm,5%,1/16W,DA,TP,1608”
JP211	2007-000070	“R-CHIP;0ohm,5%,1/16W,DA,TP,1608”
Q101	0504-000110	“TR-DIGITAL;DTC114EU,NPN,200MW,10K/10K,SC”
Q501	0504-000110	“TR-DIGITAL;DTC114EU,NPN,200MW,10K/10K,SC”

●Electrical Parts List

LOC	CODE NO	DESCRIPTION
Q502	0504-000110	“TR-DIGITAL;DTC114EU,NPN,200MW,10K/10K,SC”
Q503	0504-000105	“TR-DIGITAL;DTA114EU,PNP,200MW,10K/10K,SC”
Q504	0504-000105	“TR-DIGITAL;DTA114EU,PNP,200MW,10K/10K,SC”
R101	2007-000669	“R-CHIP;2Kohm,1%,1/16W,DA,TP,1608”
R102	2007-000109	“R-CHIP;1Mohm,5%,1/16W,DA,TP,1608”
R103	2007-000074	“R-CHIP;100ohm,5%,1/16W,DA,TP,1608”
R106	2007-000102	“R-CHIP;100Kohm,5%,1/16W,DA,TP,1608”
R107	2007-000090	“R-CHIP;10KOHM,5%,1/16W,DA,TP,1608”
R109	2007-000076	“R-CHIP;330ohm,5%,1/16W,DA,TP,1608”
R110	2007-000090	“R-CHIP;10KOHM,5%,1/16W,DA,TP,1608”
R111	2007-001179	“R-CHIP;8.2Kohm,5%,1/16W,DA,TP,1608”
R112	2007-000134	“R-CHIP;33Kohm,5%,1/16W,DA,TP,1608”
R113	2007-000134	“R-CHIP;33Kohm,5%,1/16W,DA,TP,1608”
R114	2007-000067	“R-CHIP;15Kohm,1%,1/16W,DA,TP,1608”
R115	2007-000090	“R-CHIP;10KOHM,5%,1/16W,DA,TP,1608”
R116	2007-000084	“R-CHIP;4.7Kohm,5%,1/16W,DA,TP,1608”
R117	2007-000070	“R-CHIP;0ohm,5%,1/16W,DA,TP,1608”
R118	2007-000070	“R-CHIP;0ohm,5%,1/16W,DA,TP,1608”
R119	2007-001002	“R-CHIP;510ohm,5%,1/16W,DA,TP,1608”
R120	2007-001044	“R-CHIP;56ohm,5%,1/16W,DA,TP,1608”
R121	2007-000071	“R-CHIP;22ohm,5%,1/16W,DA,TP,1608”
R122	2007-000071	“R-CHIP;22ohm,5%,1/16W,DA,TP,1608”
R201	2007-000115	“R-CHIP;82ohm,5%,1/16W,DA,TP,1608”
R202	2007-000071	“R-CHIP;22ohm,5%,1/16W,DA,TP,1608”
R203	2007-000071	“R-CHIP;22ohm,5%,1/16W,DA,TP,1608”
R204	2007-000115	“R-CHIP;82ohm,5%,1/16W,DA,TP,1608”
R205	2007-000071	“R-CHIP;22ohm,5%,1/16W,DA,TP,1608”
R206	2007-000115	“R-CHIP;82ohm,5%,1/16W,DA,TP,1608”
R207	2007-000115	“R-CHIP;82ohm,5%,1/16W,DA,TP,1608”
R208	2007-000071	“R-CHIP;22ohm,5%,1/16W,DA,TP,1608”
R209	2007-000115	“R-CHIP;82ohm,5%,1/16W,DA,TP,1608”
R210	2007-000070	“R-CHIP;0ohm,5%,1/16W,DA,TP,1608”
R212	2007-000074	“R-CHIP;100ohm,5%,1/16W,DA,TP,1608”
R213	2007-000074	“R-CHIP;100ohm,5%,1/16W,DA,TP,1608”
R214	2007-000512	“R-CHIP;2.4Kohm,5%,1/16W,DA,TP,1608”
R215	2007-000076	“R-CHIP;330ohm,5%,1/16W,DA,TP,1608”
R216	2007-000113	“R-CHIP;33ohm,5%,1/16W,DA,TP,1608”
R217	2007-000116	“R-CHIP;120ohm,5%,1/16W,DA,TP,1608”
R218	2007-000882	“R-CHIP;4.7ohm,5%,1/16W,DA,TP,1608”
R220	2007-000708	“R-CHIP;3.9Kohm,1%,1/16W,DA,TP,1608”
R222	2007-000772	“R-CHIP;33Kohm,1%,1/16W,DA,TP,1608”
R223	2007-000772	“R-CHIP;33Kohm,1%,1/16W,DA,TP,1608”
R224	2007-000772	“R-CHIP;33Kohm,1%,1/16W,DA,TP,1608”
R226	2007-000060	“R-CHIP;100Kohm,1%,1/16W,DA,TP,1608”
R227	2007-000583	“R-CHIP;22Kohm,1%,1/16W,DA,TP,1608”
R228	2007-001206	“R-CHIP;82Kohm,1%,1/16W,DA,TP,1608”
R229	2007-000090	“R-CHIP;10KOHM,5%,1/16W,DA,TP,1608”
R230	2007-000090	“R-CHIP;10KOHM,5%,1/16W,DA,TP,1608”
R231	2007-000133	“R-CHIP;330Kohm,5%,1/16W,DA,TP,1608”
R232	2007-000090	“R-CHIP;10KOHM,5%,1/16W,DA,TP,1608”
R233	2007-000092	“R-CHIP;15Kohm,5%,1/16W,DA,TP,1608”
R234	2007-000090	“R-CHIP;10KOHM,5%,1/16W,DA,TP,1608”
R235	2007-000084	“R-CHIP;4.7Kohm,5%,1/16W,DA,TP,1608”
R236	2007-000431	“R-CHIP;16Kohm,5%,1/16W,DA,TP,1608”
R237	2007-000109	“R-CHIP;1Mohm,5%,1/16W,DA,TP,1608”
R238	2007-000070	“R-CHIP;0ohm,5%,1/16W,DA,TP,1608”
R239	2007-000312	“R-CHIP;10OHM,5%,1/8W,DA,TP,3216”

●Electrical Parts List

LOC	CODE NO	DESCRIPTION
R240	2007-000074	“R-CHIP;100ohm,5%,1/16W,DA,TP,1608”
R241	2007-000074	“R-CHIP;100ohm,5%,1/16W,DA,TP,1608”
R242	2007-000078	“R-CHIP;1Kohm,5%,1/16W,DA,TP,1608”
R243	2007-000078	“R-CHIP;1Kohm,5%,1/16W,DA,TP,1608”
R245	2007-000077	“R-CHIP;470ohm,5%,1/16W,DA,TP,1608”
R246	2007-000084	“R-CHIP;4.7Kohm,5%,1/16W,DA,TP,1608”
R247	2007-000094	“R-CHIP;22Kohm,5%,1/16W,DA,TP,1608”
R250	2007-000309	“R-CHIP;10ohm,5%,1/16W,DA,TP,1608”
R251	2007-000883	“R-CHIP;4.7OHM,5%,1/8W,DA,TP,3216”
R301	2007-000075	“R-CHIP;220ohm,5%,1/16W,DA,TP,1608”
R302	2007-001157	“R-CHIP;750ohm,5%,1/16W,DA,TP,1608”
R303	2007-000075	“R-CHIP;220ohm,5%,1/16W,DA,TP,1608”
R304	2007-000076	“R-CHIP;330ohm,5%,1/16W,DA,TP,1608”
R305	2007-000090	“R-CHIP;10KOHM,5%,1/16W,DA,TP,1608”
R306	2007-000123	“R-CHIP;1.5Kohm,5%,1/16W,DA,TP,1608”
R307	2007-000094	“R-CHIP;22Kohm,5%,1/16W,DA,TP,1608”
R308	2007-000094	“R-CHIP;22Kohm,5%,1/16W,DA,TP,1608”
R309	2007-000094	“R-CHIP;22Kohm,5%,1/16W,DA,TP,1608”
R312	2007-000075	“R-CHIP;220ohm,5%,1/16W,DA,TP,1608”
R313	2007-000076	“R-CHIP;330ohm,5%,1/16W,DA,TP,1608”
R314	2007-000090	“R-CHIP;10KOHM,5%,1/16W,DA,TP,1608”
R315	2007-000094	“R-CHIP;22Kohm,5%,1/16W,DA,TP,1608”
R316	2007-000070	“R-CHIP;0ohm,5%,1/16W,DA,TP,1608”
R317	2007-000094	“R-CHIP;22Kohm,5%,1/16W,DA,TP,1608”
R318	2007-000109	“R-CHIP;1Mohm,5%,1/16W,DA,TP,1608”
R319	2007-000094	“R-CHIP;22Kohm,5%,1/16W,DA,TP,1608”
R322	2007-000094	“R-CHIP;22Kohm,5%,1/16W,DA,TP,1608”
R323	2007-000094	“R-CHIP;22Kohm,5%,1/16W,DA,TP,1608”
R324	2007-000094	“R-CHIP;22Kohm,5%,1/16W,DA,TP,1608”
R325	2007-000080	“R-CHIP;2Kohm,5%,1/16W,DA,TP,1608”
R326	2007-000080	“R-CHIP;2Kohm,5%,1/16W,DA,TP,1608”
R327	2007-000080	“R-CHIP;2Kohm,5%,1/16W,DA,TP,1608”
R328	2007-000080	“R-CHIP;2Kohm,5%,1/16W,DA,TP,1608”
R329	2007-000078	“R-CHIP;1Kohm,5%,1/16W,DA,TP,1608”
R331	2007-000125	“R-CHIP;3.9Kohm,5%,1/16W,DA,TP,1608”
R332	2007-000125	“R-CHIP;3.9Kohm,5%,1/16W,DA,TP,1608”
R333	2007-000125	“R-CHIP;3.9Kohm,5%,1/16W,DA,TP,1608”
R334	2007-000125	“R-CHIP;3.9Kohm,5%,1/16W,DA,TP,1608”
R335	2007-000075	“R-CHIP;220ohm,5%,1/16W,DA,TP,1608”
R336	2007-000076	“R-CHIP;330ohm,5%,1/16W,DA,TP,1608”
R337	2007-000080	“R-CHIP;2Kohm,5%,1/16W,DA,TP,1608”
R338	2007-000094	“R-CHIP;22Kohm,5%,1/16W,DA,TP,1608”
R339	2007-000094	“R-CHIP;22Kohm,5%,1/16W,DA,TP,1608”
R340	2007-000094	“R-CHIP;22Kohm,5%,1/16W,DA,TP,1608”
R341	2007-000094	“R-CHIP;22Kohm,5%,1/16W,DA,TP,1608”
R342	2007-000094	“R-CHIP;22Kohm,5%,1/16W,DA,TP,1608”
R345	2007-000080	“R-CHIP;2Kohm,5%,1/16W,DA,TP,1608”
R346	2007-000078	“R-CHIP;1Kohm,5%,1/16W,DA,TP,1608”
R395	2007-000084	“R-CHIP;4.7Kohm,5%,1/16W,DA,TP,1608”
R396	2007-000120	“R-CHIP;680ohm,5%,1/16W,DA,TP,1608”
R397	2007-000120	“R-CHIP;680ohm,5%,1/16W,DA,TP,1608”
R398	2007-000094	“R-CHIP;22Kohm,5%,1/16W,DA,TP,1608”
R399	2007-000094	“R-CHIP;22Kohm,5%,1/16W,DA,TP,1608”
R401	2007-000113	“R-CHIP;33ohm,5%,1/16W,DA,TP,1608”
R402	2007-000034	“R-CHIP;1OHM,5%,1/4W,DA,TP,3216”
R403	2007-000034	“R-CHIP;1OHM,5%,1/4W,DA,TP,3216”
R404	2007-000034	“R-CHIP;1OHM,5%,1/4W,DA,TP,3216”

●Electrical Parts List

LOC	CODE NO	DESCRIPTION
R405	2007-000883	“R-CHIP;4.7OHM,5%,1/8W,DA,TP,3216”
R406	2007-000094	“R-CHIP;22Kohm,5%,1/16W,DA,TP,1608”
R407	2007-000094	“R-CHIP;22Kohm,5%,1/16W,DA,TP,1608”
R408	2007-000094	“R-CHIP;22Kohm,5%,1/16W,DA,TP,1608”
R409	2007-000131	“R-CHIP;91Kohm,5%,1/16W,DA,TP,1608”
R410	2007-000131	“R-CHIP;91Kohm,5%,1/16W,DA,TP,1608”
R411	2007-000090	“R-CHIP;10KOHM,5%,1/16W,DA,TP,1608”
R412	2007-000090	“R-CHIP;10KOHM,5%,1/16W,DA,TP,1608”
R413	2007-000034	“R-CHIP;1OHM,5%,1/4W,DA,TP,3216”
R414	2007-002749	“R-CHIP;3.3OHM,5%,1/8W,DA,TP,3216”
R415	2007-000034	“R-CHIP;1OHM,5%,1/4W,DA,TP,3216”
R416	2007-002749	“R-CHIP;3.3OHM,5%,1/8W,DA,TP,3216”
R417	2007-000104	“R-CHIP;150Kohm,5%,1/16W,DA,TP,1608”
R418	2007-000092	“R-CHIP;15Kohm,5%,1/16W,DA,TP,1608”
R419	2007-000103	“R-CHIP;120Kohm,5%,1/16W,DA,TP,1608”
R420	2007-000134	“R-CHIP;33Kohm,5%,1/16W,DA,TP,1608”
R421	2007-000097	“R-CHIP;47Kohm,5%,1/16W,DA,TP,1608”
R422	2007-000125	“R-CHIP;3.9Kohm,5%,1/16W,DA,TP,1608”
R423	2007-000124	“R-CHIP;2.2Kohm,5%,1/16W,DA,TP,1608”
R424	2007-000103	“R-CHIP;120Kohm,5%,1/16W,DA,TP,1608”
R425	2007-000127	“R-CHIP;9.1Kohm,5%,1/16W,DA,TP,1608”
R426	2007-001134	“R-CHIP;68ohm,5%,1/16W,DA,TP,1608”
R501	2007-000036	“R-CHIP;2OHM,5%,1/8W,DA,TP,3216”
R502	2007-000036	“R-CHIP;2OHM,5%,1/8W,DA,TP,3216”
R503	2007-000090	“R-CHIP;10KOHM,5%,1/16W,DA,TP,1608”
R504	2007-000090	“R-CHIP;10KOHM,5%,1/16W,DA,TP,1608”
R505	2007-000090	“R-CHIP;10KOHM,5%,1/16W,DA,TP,1608”
R506	2007-000094	“R-CHIP;22Kohm,5%,1/16W,DA,TP,1608”
R507	2007-000102	“R-CHIP;100Kohm,5%,1/16W,DA,TP,1608”
R508	2007-000102	“R-CHIP;100Kohm,5%,1/16W,DA,TP,1608”
RA201	2011-001085	“R-NETWORK;82ohm,5%,63mW,L,CHIP,8P,TP”

© Samsung Electronics Co., Ltd.
01, 2002
Printed in Korea
Code No.: BG68-00435A