WEA400 Series Quick Installation Manual

- This manual describes the configuration of the Wireless Enterprise WEA400 series and its installation procedures.
- The installation procedures are described based on the WEA403i/412i/413i configurations. The same installation procedures apply to the WEA403e model, except for the antenna installation.

SAMSUNG

Introduction

What is the WEA400 series?

The WEA400 series is an AP for the Samsung WE wireless LAN, which connects a UE such as a smart phone, a tablet PC or a laptop that supports the wireless LAN to a wired network. The WEA400 series supports the following features:
- IEEE 802.11a/b/g/n/ac standard
- PoE (Power over Ethernet) IEEE 802.3af/802.3at
- WEA412i: 2 × 2 MIMO (Multiple Input Multiple Output)
- WEA403i/403e/413i: 3 × 3 MIMO (Multiple Input Multiple Output)
- Wireless LAN through both 2.4 GHz and 5 GHz bandwidth simultaneously

Components

After unpacking the WEA400 series, check whether all of the following components are included.

WEA403i/412i/413i

WEA403e

Common merchandise

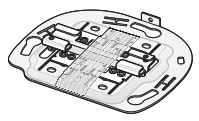

Mounting Bracket

5 M3 × L6 screws (Including 1 spare)

Installation Manual

Security Torx (T10) Screw

Plastic 4 anchors

M4 × L28 4 screws

NOTE
- It is recommended to keep all packaging materials and the box.
- The power adapter and the external antenna for WEA403e are sold separately. When necessary, please contact the place of purchase.

Names and Functions

Front View

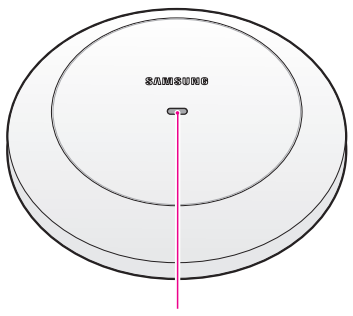

Rear View

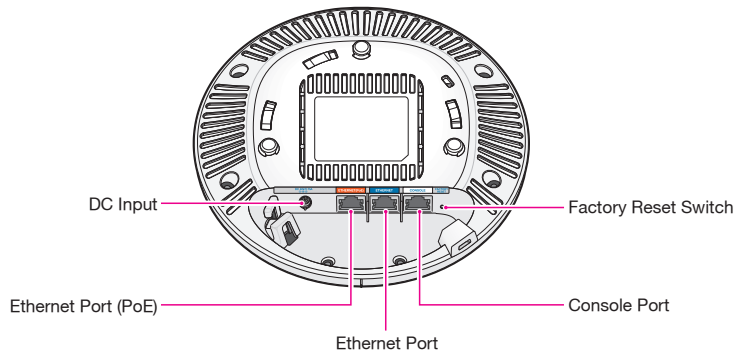

NOTE
Dust covers are installed on power ports (DC 48 V/0.75 A), Ethernet ports and console ports (CONSOLE). Remove the covers before use.

Interface

Port Name	Description
Status LED	Displays the status information of the WEA400 Series via LED.
DC Input	Used when a power adapter is used for power supply.
Ethernet Port (PoE)	Supports 1000 BASE-T Gigabit Ethernet and PoE IEEE 802.3af/802.3at.
Ethernet Port	Supports 1000 BASE-T Gigabit Ethernet.
Console Port	Used for checking the operational status of the WEA400 series and for CLI input.
Factory Reset Switch	Used for initialization when commencing factory shipment of the WEA400 series.

Status LED

LED	Status	Description
System start status	White On	Initial LED status
	Blue On	Device reset and test in progress
	Red On	Booting failure (Device reset failure)
Provisioning Status	Red, green and off repeated	APC connection in progress (Network link normal)
	Green blinking	CAPWAP connection in progress (APC server connection normal)
Normal operation status	Green On	When there is no connected wireless UE
	Blue On	When there is a connected wireless UE
Upgrade	Green blinking	Software upgrade in progress
Error status	Red blinking	Physical connection error of network
	Yellow blinking	IP address conflict
	Purple blinking	Dynamic IP address allocation failure
	Bluish-green blinking	Logical connection error of network
	Red, green and off repeated	Wireless interface error

Installation

The WEA400 series can be installed on ceilings or walls.
Please check whether all the components are included before installation.

Before Installation

Safety Requirements

Risks may be caused when the following safety warnings are not properly observed. For safe use, make sure to be well-informed.

WARNING
- There is an electrical risk with the product. Make sure that the power is off during installation and do not proceed with the installation when there is current leakage. Use of products with current leakage may cause serious electrical shock to the user.
- Wear anti-static gloves or take appropriate actions to prevent ESD when handling the product.
- Do not connect a phone line connector to the Ethernet port. It may damage the product.
- This product must be connected to ta power supply in compliance with IEEE 802.3af/at or to a limited power supply in compliance with IEC/EN/UL 60950-1.

CAUTION
- This product must be installed or removed only by appropriately-trained service personnel.
- This product operates with SELV (Safety Extra Low Voltage) according to IEC/EN/UL 60950-1.
- All interconnecting equipment including this product must be installed within the same building. For details, refer to Environment A of IEEE 802.3af/at standard.
- This product must be installed with at least 3 m or more distance from the WiMAX/3G/4G repeater or antenna.

Installation Instructions

The instructions below must be observed when installing.
- It must be installed in a place that can be easily accessed for product installation, cable connection and maintenance.
- The PoE LAN cable must be always installed away from any electrical interference source such as power lines, fluorescent lights or transmitters.
- The PoE LAN cable must be CAT 5E or higher.
- When PoE is unavailable, a power adapter (sold separately) can be used. The 3-pin (including ground) power socket that supplies 100~240 V AC, 50~60 Hz must be located within 2 m from each equipment and the power must be supplied through an independent circuit breaker. It is recommended to use the equipment that uses a filter or a surge.

Installation on Ceilings (When the ceiling type is T-bar)

CAUTION
- When incorrectly installed on the ceiling, the WEA400 series may drop onto a person or equipment. Therefore, make sure to fix it firmly.
- If the ceiling type is not T-Bar, please refer to the 'Installation Manual' provided separately. For this installation manual, please contact the dealer.

1. Remove the holding tape that was attached to fix the ceiling clip.

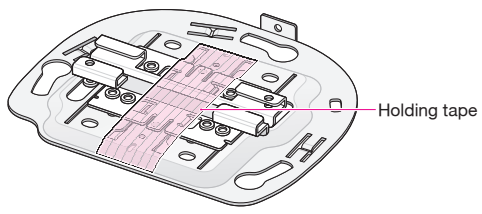

2. Open the ceiling clip so that it is wider than the width of the T-bar.

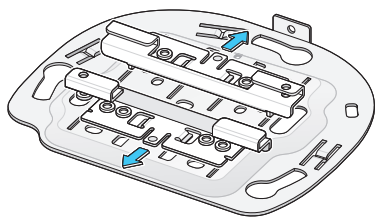

3. Move the ceiling clip so that it is appropriate for the T-bar width.

4. Fix the ceiling clip in place by fastening the 4 designated screws.

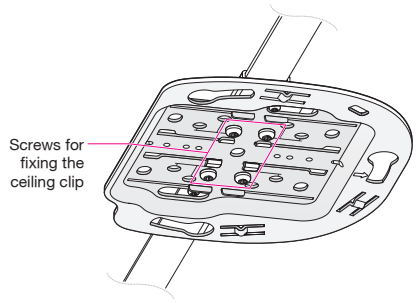

5. Fix the T-bar in place by fastening the screws (total of 2) that are on the ceiling clip.

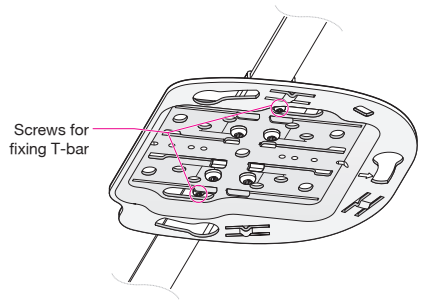

NOTE

If the T-bar size of the ceiling is 15 mm, 24 mm or 38 mm, the position to fix the ceiling clip can be checked from the bottom surface of the mount bracket. If the T-bar size is unknown, push the ceiling clip to check the fixing positions.

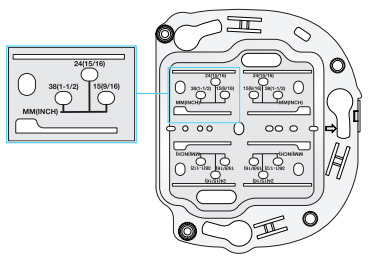

6. Pull out a LAN cable through a hole on the ceiling and connect is to an Ethernet port (PoE) on the back side of the WEA400 series.

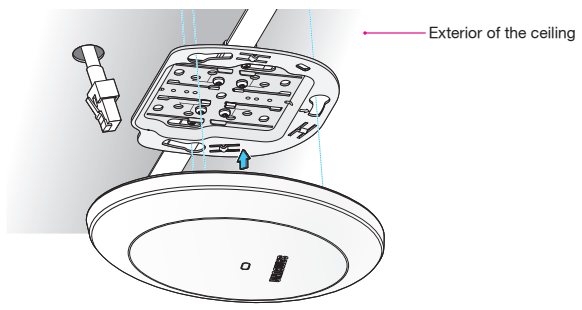

NOTE

If PoE is not supported, connect the power adapter to the DC input on the back side of the WEA400 series. The output of the power adapter is 48 V/0.75 A and is not compatible with the 12 V/2 A output power adapter that is used by the previous WEA302i/303i/303e AP.

7. Align the WEA400 series with the 3 holes on the mount bracket and then turn clockwise to fix it in place. Clean up the ceiling and other cables.

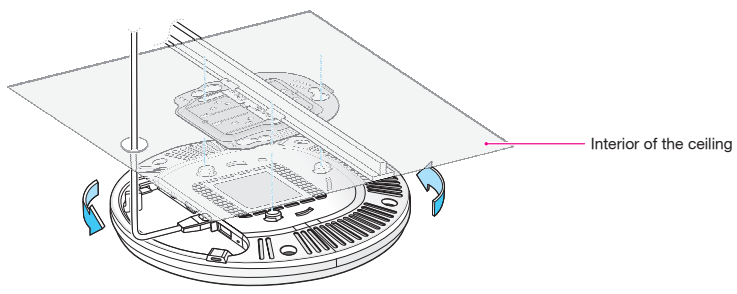

Installation on Walls

1. Remove the holding tape that was attached to fix the ceiling clip.

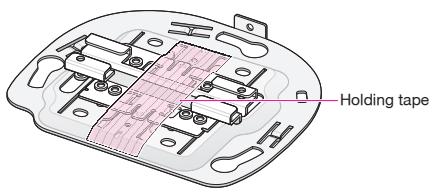

2. Remove the ceiling clip from the mount bracket.

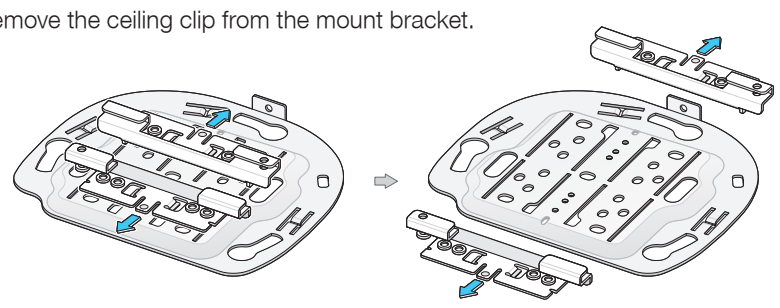

3. Place the mount bracket on the wall.
Mark and drill 4 screws in appropriate spots.

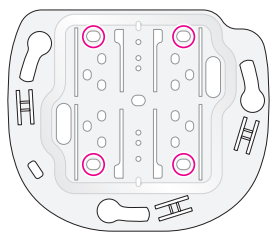

4. Use a hammer to insert 4 plastic anchors into the drilled holes on the wall. Align the inserted plastic anchors and the screw holes of the bracket. Fix the bracket to the wall by fastening four M4 × L28 screws.

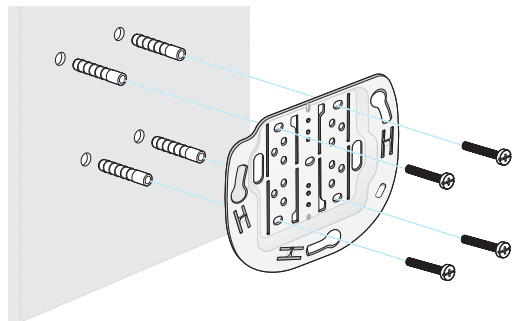

5. Insert a LAN cable into the Ethernet port (PoE) on the back side of the WEA400 series.

NOTE

If PoE is not supported, connect the power adapter to the DC input on the back of the WEA400 series.

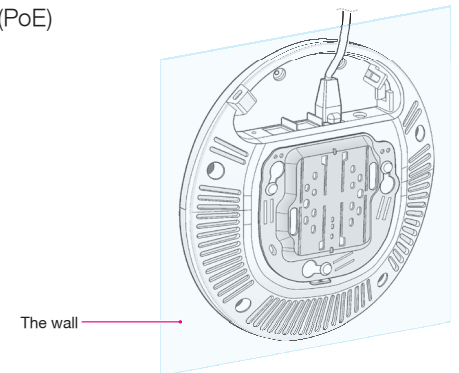

NOTE

For the WEA403e model, remove the protection cap from the antenna connector and install the external antenna (separately purchased). The 3 types of antennas that can be installed to the WEA403e model are listed below. (More antenna types may be added in the future.)

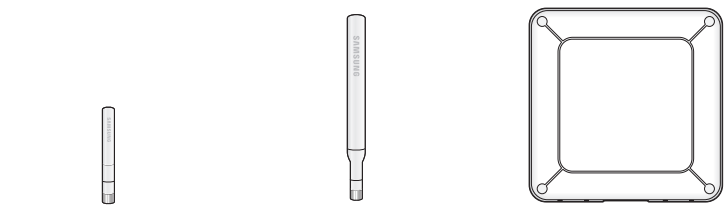

Low gain dipole antenna | High gain dipole antenna | Patch antenna

NOTE

Installing Anti-Theft Lock Cable

When installing the WEA400 series AP in a public place, it is recommended to use anti-theft lock cables to prevent any loss. (An anti-theft lock cable can be purchased separately and a variety of products can be found in the market.)

1. Connect the anti-theft lock cable to the WEA400 series AP.

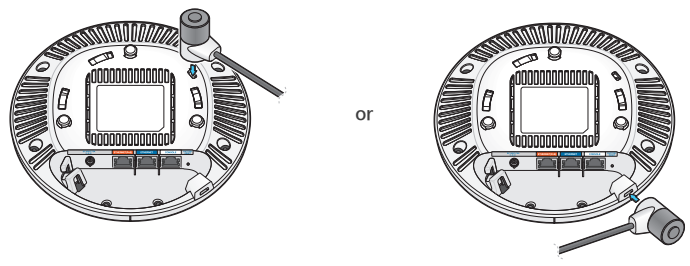

2. Turn the lock cable key to lock the cable.
3. Remove the key from the lock cable and keep it in a separate location.

NOTE

Using the anti-theft Trox screws

The WEA400 series AP products can be prevented from being stolen when fastening the Trox screws as shown below. (Trox screws can be easily fastened when they are fixed to the mount bracket before assembling the AP product.)

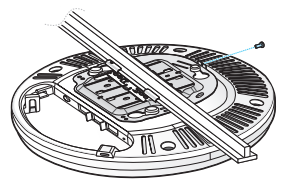

This equipment has been tested and found to comply with the limits for a Class B digital device, pursuant to part 15 of the FCC Rules. These limits are designed to provide reasonable protection against harmful interference in a residential installation. This equipment generates, uses and can radiate radio frequency energy and, if not installed and used in accordance with the instructions, may cause harmful interference to radio communications. However, there is no guarantee that interference will not occur in a particular installation. If this equipment does cause harmful interference to radio or television reception, which can be determined by turning the equipment off and on, the user is encouraged to try to correct the interference by one or more of the following measures:
- Reorient or relocate the receiving antenna.
- Increase the separation between the equipment and receiver.
- Connect the equipment into an outlet on a circuit different from that to which the receiver is connected.
- Consult the dealer or an experienced radio/TV technician for help.

CAUTION

Changes or modifications not expressly approved by the party responsible for compliance could void the user's authority to operate the equipment.

The 5150-5250 MHz band is restricted to indoor use only.

This device complies with Industry Canada licence-exempt RSS standard(s). Operation is subject to the following two conditions: (1) this device may not cause interference, and (2) this devicemust accept any interference, including interference that may cause undesired operation of thedevice.

Le présent appareil est conforme aux CNR d'Industrie Canada applicables aux appareils radio exempts de licence. L'exploitation est autorisée aux deux conditions suivantes: (1) l'appareil ne doit pas produire de brouillage, et (2) l'utilisateur de l'appareil doit accepter tout brouillage radioélectrique subi, même si le brouillage est susceptible d'en compromettre le fonctionnement.

FCC RF Radiation Exposure Statement:

This equipment complies with FCC RF radiation exposure limits set forth for an uncontrolled environment.
This equipment should be installed and operated with a minimum distance of 50 cm between the radiator and your body.
This transmitter must not be co-located or operating in conjunction with any other antenna or transmitter.

RSS-102 RF Exposure

L'antenne (ou les antennes) doit être installée de façon à maintenir à tout instant une distance minimum de au moins 50 cm entre la source de radiation (l'antenne) et toute personne physique.Cet appareil ne doit pas être installé ou utilisé en conjonction avec une autre antenne ou émetteur.

Electromagnetic Wave Suitability Notice

Class B Equipment (For Home Use Broadcasting & Communication Equipment)

This equipment is home use (Class B) electromagnetic wave suitability equipment and to be used mainly at home and it can be used in all areas.

This product is RoHS compliant.

Part No.: EC68-00179A (Ver.2.0)