HCT CO.,LTD
74, Seoicheon-ro 578beon-gil, Majang-myeon, Icheon-si, Gyeonggi-do, Korea
TEL: +82-31-645-6300 FAX: +82-31-645-6401

FCC DFS REPORT

FCC Certification

Applicant Name:
SAMSUNG Electronics Co.,Ltd.

Address:
129, Samsung-ro, Yeongtong-gu, Suwon-si,
Gyeonggi-do, 16677, Rep. of Korea

Date of Issue:
March 14, 2016
Test Site/Location:
HCT CO., LTD., 74,Seoicheon-ro 578beon-gil,Majang-myeo,Icheon-si, Gyeonggi-do, 17383, Rep. of KOREA
Report No.: HCT-R-1603-F045-1
HCT FRN: 0005866421
IC Recognition No.: 5944A-5

FCC ID : A3LWEA403SI
IC : 649E-WEA403SI
APPLICANT : SAMSUNG Electronics Co.,Ltd.

FCC/ IC Model(s): WEA403Si
EUT Type: WLAN Access Point
Max. RF Output Power:

Port	Band	Mode	Channel Bandwidth (MHz)	Frequency Range (MHz)	Power (dBm)
Service	UNII 2A	802.11a	20	5260 – 5320	14.43
		802.11n	20	5260 – 5320	14.41
		802.11n	40	5270 – 5310	10.85
		802.11ac	20	5260 – 5320	14.92
		802.11ac	40	5270 – 5310	10.74
		802.11ac	80	5290	9.16
	UNII 2C	802.11a	20	5470 – 5720	15.66
		802.11n	20	5470 – 5720	16.33
		802.11n	40	5510 – 5710	18.08
		802.11ac	20	5470 – 5720	16.12
		802.11ac	40	5510 – 5710	18.06
		802.11ac	80	5530 – 5690	18.09
Monitoring	UNII 2A	802.11a	20	5260 – 5320	16.04
	UNII 2C	802.11a	20	5470 – 5720	16.37

Frequency Range: 5260 MHz – 5320 MHz (UNII 2A) and 5470 – 5725MHz (UNII 2C)
Modulation type OFDM
FCC Classification: Unlicensed National Information Infrastructure (UNII)
FCC Rule Part(s): Part 15.407(DFS)
IC Rule : RSS 247(Issue 1, May 2015)

Engineering Statement:

The measurements shown in this report were made in accordance with the procedures indicated, and the emissions from this equipment were found to be within the limits applicable. I assume full responsibility for the accuracy and completeness of these measurements, and for the qualifications of all persons taking them.

HCT CO., LTD. Certifies that no party to this application has subject to a denial of Federal benefits that includes FCC benefits pursuant to section 5301 of the Anti-Drug Abuse Act of 1998,21 U.S. C.853(a)

Report prepared by
: Seul Ki Lee
Test engineer of RF Team

Approved by
: Sang Jun Lee
Manager of RF Team

This report only responds to the tested sample and may not be reproduced, except in full, without written approval of the HCT Co., Ltd.

Version

TEST REPORT NO.	DATE	DESCRIPTION
HCT-R-1503-F045	March 09, 2016	- First Approval Report
HCT-R-1503-F045-1	March 14, 2016	- Revised the note on Page 6

Table of Contents

1. GENERAL INFORMATION 4

2. EUT DESCRIPTION 4

3. SCOPE 5

4. INSTRUMENT CALIBRATION 5

5. FACILITIES AND ACCREDITATIONS 5

5.1 FACILITIES 5

5.2 EQUIPMENT 5

6. SUMMARY OF TEST 6

7. DESCRIPTION OF DYNAMIC FREQUENCY SELECTION TEST 7

7.1 APPLICABILITY 7

7.2 REQUIREMENTS 7

7.3 DFS DETECTION THRESHOLD VALUES 9

7.4 PARAMETERS OF DFS TEST SIGNALS 10

7.5 TEST AND MEASUREMENT SYSTEM 14

7.6 DESCRIPTION OF EUT 16

7.7 UNII 2C TEST RESULT 17

7.7.1 UNII Detection Bandwidth 17

7.7.2 Statistical Performance Check 26

8. LIST OF TEST EQUIPMENT 29

1. GENERAL INFORMATION

Applicant:	SAMSUNG Electronics Co.,Ltd.
Address:	129, Samsung-ro, Yeongtong-gu, Suwon-si, Gyeonggi-do, 16677, Rep. of Korea
FCC ID:	A3LWEA403SI
IC:	649E-WEA403SI
EUT Type:	WLAN Access Point
FCC/IC Model name(s):	WEA403Si
Date(s) of Tests:	February 10, 2016 ~ February 19, 2016
Place of Tests:	HCT Co., Ltd. 74, Seoicheon-ro 578beon-gil, Majang-myeon, Icheon-si, Gyeonggi-do, Korea (IC Recognition No. : 5944A-5)

2. EUT DESCRIPTION

EUT Type	WLAN Access Point				
FCC/ IC Model Name	WEA453e				
Location for use	Indoor only				
Power Supply	AC adaptor : 100 V ~ 240 V, POE : DC 48V				
Frequency Range	5250 MHz - 5350 MHz (UNII 2A Band) 5470 MHz - 5725 MHz (UNII 2C Band)				
Modulation Type	OFDM				
Antenna Specification	Manufacturer	ACE Technology			
	Antenna type	Internal Antenna			
	Peak Gain	Monitor		Service	
		UNII 2A	UNII 2C	UNII 2A	UNII 2C
		Ant 0 : 7.80 dBi	Ant 0 : 7.54 dBi	Ant 0 : 6.76 dBi	Ant 0 : 6.34 dBi
		Ant 1 : 6.84 dBi	Ant 1 : 6.98 dBi	Ant 1 : 6.24 dBi	Ant 1 : 5.71 dBi
		Ant 2 : 6.43 dBi	Ant 2 : 7.68 dBi	Ant 2 : 5.90 dBi	Ant 2 : 5.69 dBi

3. SCOPE

This report has been prepared to demonstrate compliance with the requirements for Dynamic Frequency Selection(DFS) as stated in KDB 905462 D02 v01r03 and Industry Canada RSS 247 Issue 1 specifications. Testing was performed WEA403Si in accordance with the measurement procedure described in Appendix B of FCC KDB 905462 D02 v01r03 . As of July 20, 2007 all devices operating in the UNII 2A Band and /or the UNII 2C Bands must comply with the DFS requirements. The Samsung WEA403Si product operates as a Master device with full radar detection and Dynamic Frequency Selection (DFS) capability.

4. INSTRUMENT CALIBRATION

The measuring equipment, which was utilized in performing the tests documented herein, has been calibrated in accordance with the manufacturer's recommendations for utilizing calibration equipments, which is traceable to recognized national standards.

5. FACILITIES AND ACCREDITATIONS

5.1 FACILITIES

The SAC(Semi-Anechoic Chamber) and conducted measurement facility used to collect the radiated data are located at the 74, Seoicheon-ro 578beon-gil, Majang-myeon, Icheon-si, Gyeonggi-do, Korea. The site is constructed in conformance with the requirements of ANSI C63.4. (Version :2014) and CISPR Publication 22. Detailed description of test facility was submitted to the Commission and accepted dated July 07, 2015 (Registration Number: 90661) / June 22, 2015 (IC Registration Number: 5944A-5)

5.2 EQUIPMENT

Radiated emissions are measured with one or more of the following types of Linearly polarized antennas: tuned dipole, bi-conical, log periodic, bi-log, and/or ridged waveguide, horn. Spectrum analyzers with pre-selectors and quasi-peak detectors are used to perform radiated measurements. Conducted emissions are measured with Line Impedance Stabilization Networks and EMI Test Receivers. Calibrated wideband preamplifiers, coaxial cables, and coaxial attenuators are also used for making measurements.

All receiving equipment conforms to CISPR Publication 16-1, “Radio Interference Measuring Apparatus and Measurement Methods.”

6. SUMMARY OF TEST

Band	Parameter	Condition	Limit	Result
UNII 2C	Non-occupancy Period	Conducted	30 minutes	Pass
	Channel Availability Check Time		60 seconds	
	Channel Move Time		10 seconds	
	Channel Closing Transmission Time		200 ms + aggregate of 60 ms over remaining 10 second period	
	U-NII Detection Bandwidth		Minimum 100% of the U-NII 99% Transmission power bandwidth	

Note : 1. Test modes for DFS testing used according to KDB 905462 D04.

2. WEA403Si is same with FCC ID : A3LWEA403I for DFS. According to KDB 905462 D02 DFS new rules v01r03, the new rules is added only to the radar type 1 and 100 % detection Bandwidth in KDB 905462 D01 DFS old rules. So, we were performed only additional Statistical Performance Check test for type 1. And we applied that U-NII detection bandwidth is 100 % of the U-NII 99 % transmission power bandwidth.

3. KDB 905462 D2 DFS new rules and KDB 905462 D1 DFS old rules are the same, except for radar type 1 and 100 % U-NII detection bandwidth. Therefore, WEA403Si satisfy KDB 905462 D02 DFS new rules v01r03.

7. DESCRIPTION OF DYNAMIC FREQUENCY SELECTION TEST

7.1 APPLICABILITY

The following table from KDB 905462 D02 v01 lists the applicable requirements for the DFS testing. The device evaluated in this report is considered a master device.

Requirement	Operation Mode		
	Master	Client Without Radar Detection	Client With Radar Detection
Non-Occupancy Period	Yes	Not required	Yes
DFS Detection Threshold	Yes	Not required	Yes
Channel Availability Check Time	Yes	Not required	Not required
U-NII Detection Bandwidth	Yes	Not required	Yes

Table 1-1. DFS Applicability

Requirement	Operation Mode		
	Master	Client Without Radar Detection	Client With Radar Detection
DFS Detection Threshold	Yes	Not required	Yes
Channel Closing Transmission Time	Yes	Yes	Yes
Channel Move Time	Yes	Yes	Yes
U-NII Detection Bandwidth	Yes	Not required	Yes

Table 1 2. DFS Applicability During Normal Operation

7.2 REQUIREMENTS

Per KDB 905462 D02 v01r03 the following are the requirements for Master Devices:

a) The Master Device will use DFS in order to detect Radar Waveforms with received signal strength above the DFS Detection Threshold in the 5.25-5.35 GHz and 5.47-5.725GHz band. DFS is not required in the 5.15-5.25 GHz or 5.725-5.850 GHz bands.

b) Before initiating a network on a Channel, the Master Device will perform a Channel Availability Check for a specified time duration (Channel Availability Check Time) to ensure that there is no radar system operating on the Channel, using DFS described under subsection a) above.

c) The Master Device initiates a U-NII network by transmitting control signals that will enable

other U-NII devices to Associate with the Master Device.

d) During normal operation, the Master Device will monitor the Channel (In-Service Monitoring) to ensure that there is no radar system operating on the Channel, using DFS described under a).

e) If the Master Device has detected a Radar Waveform during In-Service Monitoring as described under d), the Operating Channel of the U-NII network is no longer an Available Channel. The Master Device will instruct all associated Client Device(s) to stop transmitting on this Channel within the channel Move Time. The transmissions during the Channel Move Time will be limited to the Channel Closing Transmission Time.

f) Once the Master Device has detected a Radar Waveform it will not utilize the Channel for the duration of the Non-Occupancy Period.

g) If the Master Device delegates the In-Service Monitoring to a Client Device, the the combination will be tested to the requirements described under d) through f) above.

Table provides the response requirements for Master and Client Devices incorporating DFS..

Parameter	Value
Non-occupancy period	Minimum 30 minutes
Channel Availability Check Time	60 seconds
Channel Move Time	10 seconds See Note 1.
Channel Closing Transmission Time	200 milliseconds + an Aggregate of 60 milliseconds over Remaining 10 second period. See Notes 1 and 2.
U-NII Detection Bandwidth	Minimum 100 % of the U-NII 99 % transmission Power bandwidth. See Note 3.
Note 1: Channel Move Time and the Channel Closing Transmission Time should be performed with Radar Type 0. The measurement timing begins at the end of the Radar Type 0 burst. **Note 2:** The Channel Closing Transmission Time is comprised of 200 milliseconds starting at the begging of the Channel Move Time plus any additional intermittent control signals required to facilitate a Channel move (an aggregate of 60 milliseconds) during the remainder of the 10 second period. The aggregate duration of control signals will not count quiet periods in between transmissions. **Note 3:** During the U-NII Detection Bandwidth detection test, Radar type 0 should be used. for each frequency step the minimum percentage of detection is 90 percent. Measurements are performed with no data traffic.	

Table 1-3: DFS Response requirements

7.3 DFS DETECTION THRESHOLD VALUES

The DFS detection thresholds are defined for Master devices and Client Devices with In-service monitoring. These detection thresholds are listed in the following table.

Maximum Transmit Power	**Value (See Notes 1 and 2)**
EIRP ≥ 200 milliwatt	-64 dBm
EIRP < 200 milliwatt and Power spectral density < 10dBm/MHz	-62 dBm
EIRP < 200 milliwatt that do not meet the power spectral density requirement	-64 dBm
Note 1: This is the level at the input of the receiver assuming a 0 dBi receive antenna. Note 2: Throughout these test procedures an additional 1 dB has been added to the amplitude of the test transmission waveforms to account for variations in measurement equipment. This will ensure that the test signal is at or above the detection threshold level to trigger a DFS response.	

Table 1-4: Detection Thresholds for Master Devices and Client Devices with Radar Detection

7.4 PARAMETERS OF DFS TEST SIGNALS

As the EUT is a Master Device with Radar Detection that 0~6 radar type pulse is required for the testing. Radar Pulse type 0 was used in the evaluation of the Master device for the purpose of measuring the Channel Move Time and the Channel Closing Transmission Time. Table 1-5 lists the parameters for the Short Pulse Radar Waveforms.

Radar Type	Pulse Width (μsec)	PRI (μsec)	Number Of Pulses	Minimum Percentage of Successful Detection	Minimum Number of Trials
0	1	1428	18	See Note 1	See Note 1
1	1	Test A: 15 unique PRI value randomly selected from the list of 23 PRI values in Table 5a Test B: 15 unique PRI values randomly selected within the range of 518-3066 μsec, with a minimum increment of 1 μsec, excluding PRI values selected in Test A	Roundup $\left\{ \left\lceil \frac{1}{360} \right\rceil \left\lceil \frac{19 \cdot 10^6}{PRI_{\mu sec}} \right\rceil \right\}$	60%	30
2	1-5	150 230	23 29	60 %	30
3	6-10	200-500	16-18	60 %	30
4	11 20	200-500	12-16	60 %	30
Aggregate (Radar Types 1-4)				80 %	120
Note 1 : Short Pulse Radar Type 0 should be used for the detection bandwidth test, channel move time, and channel closing time tests.					

Table 1-5: Parameters for Short Pulse Radar Waveforms

A minimum of 30 unique waveforms are required for each of the Short Pulse Radar Types 2 through 4. If more than 30 waveforms are used for Short Pulse Radar Types 2 through 4, then each additional waveform must also be unique and not repeated from the previous waveforms.
If more than 30 waveforms are used for Short Pulse Radar Type 1, then each additional waveform is generated with Test B and must also be unique and not repeated from the previous waveforms in Tests A or B.

Radar Type	Pulse Width (μsec)	Chirp Width (MHz)	PRI (μsec)	Number Of Pulses Per Burst	Number Of Burst	Minimum Percentage of Successful Detection	Minimum Number of Trials
5	50 - 100	5 - 20	1000 2000	1 - 3	8 - 20	80 %	30

Table 1-6. Parameters for Long Pulse Radar Waveform

Radar Type	Pulse Width (μsec)	PRI (μsec)	Pulse Per Hop	Hopping Rate (kHz)	Hopping Sequence Length (msec)	Minimum Percentage of Successful Detection	Minimum Number of Trials
6	1	333	9	0.333	300	70 %	30

Table 1-7. Parameters for Frequency Hopping Radar Test Waveform

The parameters for this waveform are randomly chosen. Thirty unique waveforms are required for the Long Pulse radar test signal. If more than 30 waveforms are used for the Long Pulse radar test signal, then each additional waveform must also be unique and not repeated from the previous waveforms.

Each waveform is defined as follows:

1) The transmission period for the Long Pulse Radar test signal is 12 seconds.
2) There are a total of 8 to 20 Bursts in the 12 second period, with the number of Bursts being randomly chosen. This number is Burst Count.
3) Each Burst consists of 1 to 3 pulses, with the number of pulses being randomly chosen. Each Burst within the 12 second sequence may have a different number of pulses.
4) The pulse width is between 50 and 100 microseconds, with the pulse width being randomly chosen. Each pulse within a Burst will have the same pulse width. Pulses in different Bursts may have different pulse widths.
5) Each pulse has a linear FM chirp between 5 and 20 MHz, with the chirp width being randomly chosen. Each pulse within a Burst will have the same chirp width. Pulses in different Bursts may have different chirp widths. The chirp is centered on the pulse. For example, with a radar frequency of 5500 MHz and a 20 MHz chirped signal, the chirp starts at 5490 MHz and ends at 5510MHz.
6) If more than one pulse is present in a Burst, the time between the pulses will be between 1000 and 2000 microseconds, with the time being randomly chosen. If three pulses are present in a Burst, the random time interval between the first and second pulses is chosen independently of the random time interval between the second and third pulses.
7) The 12 second transmission period is divided into even intervals. The number of intervals is equal to Burst_Count. Each interval is of length (12,000,000 / Burst_Count) microseconds. Each interval contains one Burst. The start time for the Burst, relative to the beginning of the interval, is between 1 and [(12,000,000 / Burst_Count) – (Total Burst Length) + (One random PRI Interval)] microseconds, with the start time being randomly chosen. The step interval for the start time is 1 microsecond. The start time for each Burst is chosen randomly.

A representative example of a Long Pulse radar test waveform:

1) The total test signal length is 12 seconds.
2) 8 Bursts are randomly generated for the Burst_Count.
3) Burst 1 has 2 randomly generated pulses.
4) The pulse width (for both pulses) is randomly selected to be 75 microseconds.
5) The PRI is randomly selected to be at 1213 microseconds.
6) Bursts 2 through 8 are generated using steps 3 – 5.
7) Each Burst is contained in even intervals of 1,500,000 microseconds. The starting location for Pulse 1, Burst 1 is randomly generated (1 to 1,500,000 minus the total Burst 1 length + 1 random PRI interval) at the 325,001 microsecond step. Bursts 2 through 8 randomly fall in successive 1,500,000 microsecond intervals (i.e. Burst 2 falls in the 1,500,001 – 3,000,000 microsecond range).

Graphical representation of the Long Pulse radar Test waveform.

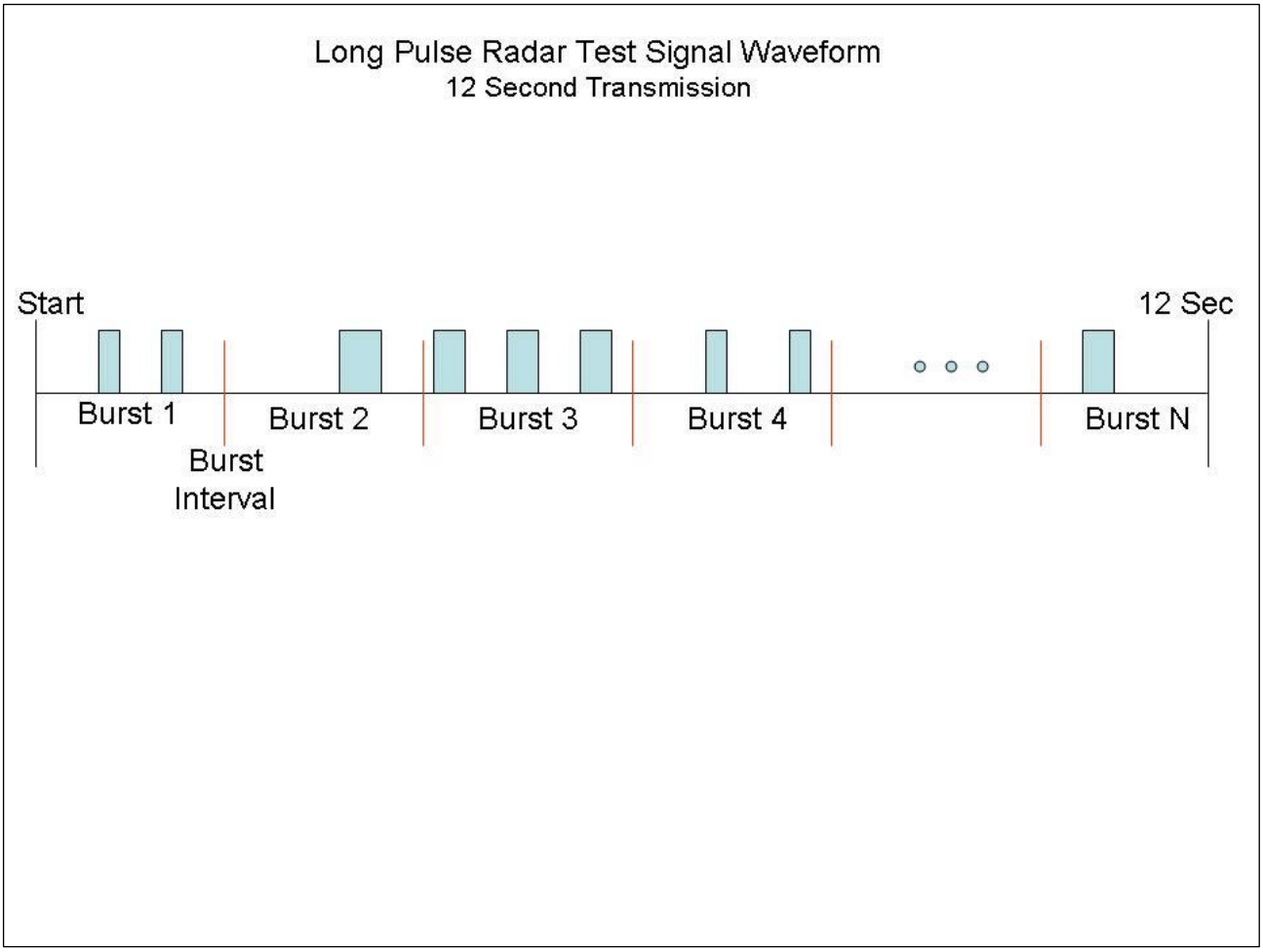

7.5 TEST AND MEASUREMENT SYSTEM

General Test Setup Procedure:

1. Connect Master AP to a network, via wired Ethernet, that allows connection to an FTP server.
2. Associate the Client with the Master AP(EUT).
3. Launch the FTP application on the Client.
4. Connect to the FTP server application to the FTP server hosting the file
5. Initiate an FTP download of the file from the host.
6. Monitor the channel loading during transfer.
7. Reduce the maximum allowed data rate for the Master AP, using the AP's GUI interface.
8. Repeat steps 5-7 until the channel loading is as close to 20 % as possible.
9. Record the data rate setting on the Master AP and the channel loading.
10. While the system is performing an FTP transfer using the settings form item 9 above, perform the Channel Closing Transmission Time and Channel Move Time Measurements as required by FCC KDB 905462 D02 v01r03 using a conducted test.

PROCEDURE

The FCC KDB 905462 D02 v01r03 describes a radiated test setup and a conducted test setup. A radiated test setup was used for this testing. Figure 3-1 shows the typical test setup. Each one channel selected between 5250 and 5350 MHz, 5470 and 5725 is chosen for the testing.

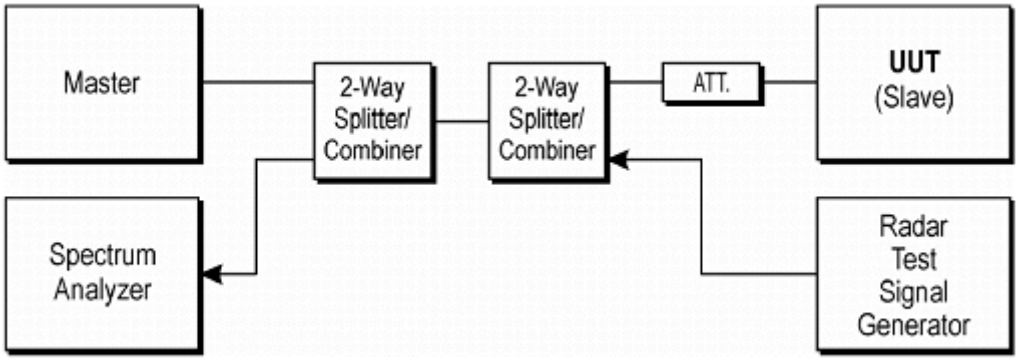

Figure 3-1. Conducted Test Setup for DFS

1. The radar pulse generator is setup to provide a pulse at the frequency that the Master and Client are operating. A Type 0 radar pulse with a 1 μs pulse width and a 1428 μs PRI is used for the testing.

2. The signal generator is adjusted to provide the radar burst (18 pulses) at a level of approximately -64 dBm at the antenna of the Master device.

3. The Master Device (EUT) is set up per the diagram in Figure 3-1 and communications between the Master device and the Client is established.

4. The MPEG file specified by the FCC (*"6½ Magic Hours"*) is streamed from the "file computer" through the Master to the Slave Device and played in full motion video using Media Player Classic Ver.6.4.8.6 in order to properly load the network.

5. The real time spectrum analyzer is set to record about 15 sec window to any transmissions occurring up to and after 10 sec.

6. The system is again setup and the monitoring time is shortened in order to capture the Channel Closing Transmission Time. This time is measured to insure that the Client ceases transmission within 200 ms and the aggregate of emissions occurring after 200 ms up to 10 sec do not exceed 60 ms. (Note: the channel may be different since the Master and Client have changed channels due to the detection of the initial radar pulse.)

7. After the initial radar burst the channel is monitored for 30 minutes to insure no transmissions or beacons occur. A second monitoring setup is used to verify that the Master and Client have both moved to different channels.

SYSTEM CALIBRATION

A-50-ohm load is connected in place of the spectrum analyzer, and the spectrum analyzer is connected to a coaxial cable. The signal generator is set to CW mode. The amplitude of the signal generator is adjusted to yield a level of - 64 dBm as measured on the spectrum analyzer.

Without changing any of the instrument settings, the spectrum analyzer is reconnected to the common port of the spectrum analyzer combiner or divider.

The spectrum analyzer displays the level of the signal generator higher than the client TX level. Because we can not search the signal generator in the spectrum analyzer when the signal generator level is - 64 dBm. The spectrum analyzer will still indicate the level higher than the client TX level.

7.6 DESCRIPTION OF EUT

The EUT operates over the 5250 MHz - 5350 MHz and 5470 MHz - 5725 MHz ranges.

The EUT is a Master device with radar detection.

In case of monitoring port, the antenna has a directional gain of 11.81 dBi in the 5250 MHz - 5350 MHz band and 12.18 dBi in the 5470 MHz- 5725 MHz band.
In case of service port, the antenna has a directional gain of 11.08 dBi in the 5250 MHz - 5350 MHz band and 10.69 dBi in the 5470 MHz- 5725 MHz band.

In case of monitoring port, the highest power level is 27.85 dBm EIRP in the 5250 MHz - 5350 MHz band and 28.55 dBm EIRP in the 5470 MHz – 5725 MHz band.
In case of service port, the highest power level is 26 dBm EIRP in the 5250 MHz - 5350 MHz band and 28.78 dBm EIRP in the 5470 MHz – 5725 MHz band.

The EUT one transmitter/receiver chain connected to a coaxial cable to perform conducted tests.

The EUT utilizes the 802.11a/n/ac architecture. Three nominal channel bandwidth is implemented: 20 MHz, 40 MHz, 80MHz.

7.7 UNII 2C TEST RESULT

For the frequency band 5470 – 5725 MHz, the Master device provides, on aggregate, uniform loading of the spectrum across all devices by selecting an operating channel among the available channels using a random algorithm.
Declared minimum antenna gain dBi.
Radar receive signal level = -64 dBm + minimum antenna gain

Radar receive signal level = -57.57(Monitoring port)
Radar receive signal level = -58.31(Service port)

7.7.1 UNII Detection Bandwidth

All UNII Channels for this device have identical channel bandwidths and DFS testing was completed on channel 5500 MHz (802.11a), 5510 MHz (HT40), 5530 MHz(VHT80).

The generating equipment is configured as shown in the Conducted Test Setup above. A single Burst of the short pulse radar Type 0 through 6 was produced at 5500 MHz (802.11a), 5510 MHz (HT40), 5530 MHz (VHT80). The EUT is set up as a standalone device (no associated Client and no traffic)

A single radar Burst is generated for a minimum of 10 trials, and the response of the EUT is noted. The EUT must detect the Radar Waveform 90% or more of the time.

The radar frequency is increased in 1MHz steps, repeating the above test sequence, until the detection rate falls below 90%. The highest frequency at which detection is greater than or equal to 90% is denoted as F_H.

The radar frequency is decreased in 1MHz steps, repeating the above test sequence, until the detection rate falls below 90%. The lowest frequency at which detection is greater than or equal to 90% is denoted as F_L.

The U-NII Detection Bandwidth is calculated as follows:
U-NII Detection Bandwidth = $F_H – F_L$

The U-NII Detection Bandwidth must be at least 100% of the EUT transmitter 99% power Table of results are continued on the next page.

Monitoring Port

UNII 2C / EUT Frequency=5,500 MHz 802.11a (Detection = √ , No Detection = O)											
Radar Frequency (MHz)	1	2	3	4	5	6	7	8	9	10	Detection Rate (%)
-14											%
-13											%
-12											%
-11											%
-10	O	O									<90%
-9	√	√	√	√	√	√	√	√	√	√	100%
-8	√	√	√	√	√	√	√	√	√	√	100%
-7	√	√	√	√	√	√	√	√	√	√	100%
-6	√	√	√	√	√	√	√	√	√	√	100%
-5	√	√	√	√	√	√	√	√	√	√	100%
-4	√	√	√	√	√	√	√	√	√	√	100%
-3	√	√	√	√	√	√	√	√	√	√	100%
2	√	√	√	√	√	√	√	√	√	√	100%
-1	√	√	√	√	√	√	√	√	√	√	100%
Frequency 5500Mhz	√	√	√	√	√	√	√	√	√	√	100%
+1	√	√	√	√	√	√	√	√	√	√	100%
+2	√	√	√	√	√	√	√	√	√	√	100%
+3	√	√	√	√	√	√	√	√	√	√	100%
+4	√	√	√	√	√	√	√	√	√	√	100%
+5	√	√	√	√	√	√	√	√	√	√	100%
+6	√	√	√	√	√	√	√	√	√	√	100%
+7	√	√	√	√	√	√	√	√	√	√	100%
+8	√	√	√	√	√	√	√	√	√	√	100%
+9	√	√	√	√	√	√	√	√	√	√	100%
+10	O	O									<90%
+11											%
+12											%
+13											%
+14											%
Detection Bandwidth = F_H – F_L = 5509 – 5491 = 18MHz											
EUT 99% Bandwidth = 16.624 MHz (ref. bandwidth channel 5500 MHz)											
16.671 MHz *100% = 16.624 MHz											
For each frequency step the minimum percentage detection is 90%											

Service Port

UNII 2C / EUT Frequency=5,500 MHz 802.11a (Detection = √ , No Detection = O)											
Radar Frequency (MHz)	1	2	3	4	5	6	7	8	9	10	Detection Rate (%)
-14											%
-13											%
-12											%
-11											%
-10	O	O									<90%
-9	√	√	√	√	√	√	√	√	√	√	100%
-8	√	√	√	√	√	√	√	√	√	√	100%
-7	√	√	√	√	√	√	√	√	√	√	100%
-6	√	√	√	√	√	√	√	√	√	√	100%
-5	√	√	√	√	√	√	√	√	√	√	100%
-4	√	√	√	√	√	√	√	√	√	√	100%
-3	√	√	√	√	√	√	√	√	√	√	100%
2	√	√	√	√	√	√	√	√	√	√	100%
-1	√	√	√	√	√	√	√	√	√	√	100%
Frequency 5500Mhz	√	√	√	√	√	√	√	√	√	√	100%
+1	√	√	√	√	√	√	√	√	√	√	100%
+2	√	√	√	√	√	√	√	√	√	√	100%
+3	√	√	√	√	√	√	√	√	√	√	100%
+4	√	√	√	√	√	√	√	√	√	√	100%
+5	√	√	√	√	√	√	√	√	√	√	100%
+6	√	√	√	√	√	√	√	√	√	√	100%
+7	√	√	√	√	√	√	√	√	√	√	100%
+8	√	√	√	√	√	√	√	√	√	√	100%
+9	√	√	√	√	√	√	√	√	√	√	100%
+10	O	O									<90%
+11											%
+12											%
+13											%
+14											%
Detection Bandwidth = F_H – F_L = 5509 – 5491 = 18MHz											
EUT 99% Bandwidth = 16.665 MHz (ref. bandwidth channel 5500 MHz)											
16.671 MHz *100% = 16.665 MHz											
For each frequency step the minimum percentage detection is 90%											

UNII 2C / EUT Frequency=5,510 MHz 802.11n HT40 (Detection = √ , No Detection = O)											
Radar Frequency (MHz)	1	2	3	4	5	6	7	8	9	10	Detection Rate (%)
23											%
22											%
21											%
20	O	O									<90%
-19	√	√	√	√	√	√	√	√	√	√	100%
-18	√	√	√	√	√	√	√	√	√	√	100%
-17	√	√	√	√	√	√	√	√	√	√	100%
-16	√	√	√	√	√	√	√	√	√	√	100%
-15	√	√	√	√	√	√	√	√	√	√	100%
-14	√	√	√	√	√	√	√	√	√	√	100%
-13	√	√	√	√	√	√	√	√	√	√	100%
-12	√	√	√	√	√	√	√	√	√	√	100%
-11	√	√	√	√	√	√	√	√	√	√	100%
-10	√	√	√	√	√	√	√	√	√	√	100%
-9	√	√	√	√	√	√	√	√	√	√	100%
-8	√	√	√	√	√	√	√	√	√	√	100%
-7	√	√	√	√	√	√	√	√	√	√	100%
-6	√	√	√	√	√	√	√	√	√	√	100%
-5	√	√	√	√	√	√	√	√	√	√	100%
-4	√	√	√	√	√	√	√	√	√	√	100%
-3	√	√	√	√	√	√	√	√	√	√	100%
2	√	√	√	√	√	√	√	√	√	√	100%
-1	√	√	√	√	√	√	√	√	√	√	100%
Frequency 5510Mhz	√	√	√	√	√	√	√	√	√	√	100%

UNII 2C / EUT Frequency=5,510 MHz 802.11n HT40 (Detection = √ , No Detection = O)											
Radar Frequency (MHz)	1	2	3	4	5	6	7	8	9	10	Detection Rate (%)
Frequency 5510Mhz	√	√	√	√	√	√	√	√	√	√	100%
+1	√	√	√	√	√	√	√	√	√	√	100%
+2	√	√	√	√	√	√	√	√	√	√	100%
+3	√	√	√	√	√	√	√	√	√	√	100%
+4	√	√	√	√	√	√	√	√	√	√	100%
+5	√	√	√	√	√	√	√	√	√	√	100%
+6	√	√	√	√	√	√	√	√	√	√	100%
+7	√	√	√	√	√	√	√	√	√	√	100%
+8	√	√	√	√	√	√	√	√	√	√	100%
+9	√	√	√	√	√	√	√	√	√	√	100%
+10	√	√	√	√	√	√	√	√	√	√	100%
+11	√	√	√	√	√	√	√	√	√	√	100%
+12	√	√	√	√	√	√	√	√	√	√	100%
+13	√	√	√	√	√	√	√	√	√	√	100%
+14	√	√	√	√	√	√	√	√	√	√	100%
+15	√	√	√	√	√	√	√	√	√	√	100%
+16	√	√	√	√	√	√	√	√	√	√	100%
+17	√	√	√	√	√	√	√	√	√	√	100%
+18	√	√	√	√	√	√	√	√	√	√	100%
+19	√	√	√	√	√	√	√	√	√	√	100%
+20	O	O									<90%
+21											
+22											
+23											
Detection Bandwidth = F_H – F_L = 5529 – 5491 = 38MHz											
EUT 99% Bandwidth = 36.329 MHz (ref. bandwidth channel 5510 MHz)											
36.286 MHz *100% = 36.329 MHz											
For each frequency step the minimum percentage detection is 90%											

UNII 2C / EUT Frequency=5,530 MHz 802.11ac VHT80 (Detection = √ , No Detection = O)											
Radar Frequency (MHz)	1	2	3	4	5	6	7	8	9	10	Detection Rate (%)
-40											
-39	O	O									<90%
-38	√	√	√	√	√	√	√	√	√	√	100%
-37	√	√	√	√	√	√	√	√	√	√	100%
-36	√	√	√	√	√	√	√	√	√	√	100%
-35	√	√	√	√	√	√	√	√	√	√	100%
-34	√	√	√	√	√	√	√	√	√	√	100%
-33	√	√	√	√	√	√	√	√	√	√	100%
-32	√	√	√	√	√	√	√	√	√	√	100%
-31	√	√	√	√	√	√	√	√	√	√	100%
-30	√	√	√	√	√	√	√	√	√	√	100%
29	√	√	√	√	√	√	√	√	√	√	100%
28	√	√	√	√	√	√	√	√	√	√	100%
27	√	√	√	√	√	√	√	√	√	√	100%
26	√	√	√	√	√	√	√	√	√	√	100%
25	√	√	√	√	√	√	√	√	√	√	100%
24	√	√	√	√	√	√	√	√	√	√	100%
23	√	√	√	√	√	√	√	√	√	√	100%
22	√	√	√	√	√	√	√	√	√	√	100%
21	√	√	√	√	√	√	√	√	√	√	100%
20	√	√	√	√	√	√	√	√	√	√	100%
-19	√	√	√	√	√	√	√	√	√	√	100%
-18	√	√	√	√	√	√	√	√	√	√	100%
-17	√	√	√	√	√	√	√	√	√	√	100%
-16	√	√	√	√	√	√	√	√	√	√	100%
-15	√	√	√	√	√	√	√	√	√	√	100%
-14	√	√	√	√	√	√	√	√	√	√	100%
-13	√	√	√	√	√	√	√	√	√	√	100%
-12	√	√	√	√	√	√	√	√	√	√	100%
-11	√	√	√	√	√	√	√	√	√	√	100%
-10	√	√	√	√	√	√	√	√	√	√	100%
-9	√	√	√	√	√	√	√	√	√	√	100%
-8	√	√	√	√	√	√	√	√	√	√	100%
-7	√	√	√	√	√	√	√	√	√	√	100%

-6	√	√	√	√	√	√	√	√	√	√	100%
-5	√	√	√	√	√	√	√	√	√	√	100%
-4	√	√	√	√	√	√	√	√	√	√	100%
-3	√	√	√	√	√	√	√	√	√	√	100%
2	√	√	√	√	√	√	√	√	√	√	100%
-1	√	√	√	√	√	√	√	√	√	√	100%
Frequency 5530Mhz	√	√	√	√	√	√	√	√	√	√	100%

UNII 2C / EUT Frequency=5,530 MHz 802.11ac VHT80 (Detection = √ , No Detection = O)											
Radar Frequency (MHz)	1	2	3	4	5	6	7	8	9	10	Detection Rate (%)
Frequency 5530Mhz	√	√	√	√	√	√	√	√	√	√	100%
+1	√	√	√	√	√	√	√	√	√	√	100%
+2	√	√	√	√	√	√	√	√	√	√	100%
+3	√	√	√	√	√	√	√	√	√	√	100%
+4	√	√	√	√	√	√	√	√	√	√	100%
+5	√	√	√	√	√	√	√	√	√	√	100%
+6	√	√	√	√	√	√	√	√	√	√	100%
+7	√	√	√	√	√	√	√	√	√	√	100%
+8	√	√	√	√	√	√	√	√	√	√	100%
+9	√	√	√	√	√	√	√	√	√	√	100%
+10	√	√	√	√	√	√	√	√	√	√	100%
+11	√	√	√	√	√	√	√	√	√	√	100%
+12	√	√	√	√	√	√	√	√	√	√	100%
+13	√	√	√	√	√	√	√	√	√	√	100%
+14	√	√	√	√	√	√	√	√	√	√	100%
+15	√	√	√	√	√	√	√	√	√	√	100%
+16	√	√	√	√	√	√	√	√	√	√	100%
+17	√	√	√	√	√	√	√	√	√	√	100%
+18	√	√	√	√	√	√	√	√	√	√	100%
+19	√	√	√	√	√	√	√	√	√	√	100%
+20	√	√	√	√	√	√	√	√	√	√	100%
+21	√	√	√	√	√	√	√	√	√	√	100%
+22	√	√	√	√	√	√	√	√	√	√	100%
+23	√	√	√	√	√	√	√	√	√	√	100%
+24	√	√	√	√	√	√	√	√	√	√	100%
+25	√	√	√	√	√	√	√	√	√	√	100%
+26	√	√	√	√	√	√	√	√	√	√	100%
+27	√	√	√	√	√	√	√	√	√	√	100%
+28	√	√	√	√	√	√	√	√	√	√	100%
+29	√	√	√	√	√	√	√	√	√	√	100%
+30	√	√	√	√	√	√	√	√	√	√	100%
+31	√	√	√	√	√	√	√	√	√	√	100%
+32	√	√	√	√	√	√	√	√	√	√	100%
+33	√	√	√	√	√	√	√	√	√	√	100%

+34	√	√	√	√	√	√	√	√	√	√	100%
+35	√	√	√	√	√	√	√	√	√	√	100%
+36	√	√	√	√	√	√	√	√	√	√	100%
+37	√	√	√	√	√	√	√	√	√	√	100%
+38	√	√	√	√	√	√	√	√	√	√	100%
+39	O	O									<90%
+40											
Detection Bandwidth = F_H – F_L = 5568 – 5492 = 76MHz											
EUT 99% Bandwidth = 75.716 MHz (ref. bandwidth channel 5530 MHz)											
BW MHz *100% =75.716 MHz											
For each frequency step the minimum percentage detection is 90%											

7.7.2 Statistical Performance Check

The steps below define the procedure to determine the minimum percentage of detection when a radar burst with a level equal to the DFS Detection Threshold is generated on the Operating Channel of the UNII device.

A UNII device operating as a Client Device will associate with the UUT (Master) at 5.500MHz 802.11a & 5.510MHz 802.11n HT40, 5.530MHz 802.11ac VHT80.

The Radar Waveform generator sends the individual waveform for each of the radar types 0-6. Statistical data will be gathered to determine the ability of the device to detect the radar test waveforms. The device can utilize a test mode to demonstrate when detection occurs to prevent the need to reset the device between trial runs. The percentage of successful detection is calculated by:

Total # of detections ÷ Total # of Trials x 100 = Probability of Detection

The Minimum number of trails, minimum percentage of successful detection and the average minimum percentage of successful detection are found in the Radar Test Waveforms section.

Monitoring Port

Verification of Detection 5,500MHz 802.11a

Trial #	Detection = √ , No Detection = O
	Type 1
1	√
2	√
3	√
4	√
5	√
6	√
7	√
8	√
9	√
10	√
11	√
12	√
13	√
14	√
15	√
16	√
17	√
18	√
19	√
20	√
21	√
22	√
23	√
24	√
25	√
26	√
27	√
28	√
29	√
30	√
Detection Percentage	100% (>60%)

Service Port

Verification of Detection 5,500MHz 802.11a

Trial #	Detection = √ , No Detection = O
	Type 1
1	√
2	√
3	√
4	√
5	√
6	√
7	√
8	√
9	√
10	√
11	√
12	√
13	√
14	√
15	√
16	√
17	√
18	√
19	√
20	√
21	√
22	√
23	√
24	√
25	√
26	√
27	√
28	√
29	√
30	√
Detection Percentage	100% (>60%)

8. LIST OF TEST EQUIPMENT

Manufacturer	Model / Equipment	Calibration Date	Calibration Interval	Serial No.
D-Link	DWA-171A1 (Slave Device)	N/A	N/A	FCC ID: KA2WA171A1
ADLINK	PXI/DFS Measurement System(S/G)	11/23/2015	Annual	302581/735
ADLINK	PXI/DFS Measurement System(S/A)	11/16/2015	Annual	303582/113
Agilent	N9020A / SIGNAL ANALYZER	06/30/2015	Annual	MY51110085
Agilent	N9020A / SIGNAL ANALYZER	07/02/2015	Annual	MY50510304
Agilent	N1911A/Power Meter	07/09/2015	Annual	MY45100523
Agilent	N1921A /POWER SENSOR	07/09/2015	Annual	MY45241059
Hewlett Packard	11636B/Power Divider	01/26/2016	Annual	0531
Agilent	87300B/Directional Coupler	11/30/2015	Annual	3116A03621
Hewlett Packard	11667B / Power Splitter	06/15/2015	Annual	5001
Hewlett Packard	E3632A / DC POWER SUPPLY	03/11/2015	Annual	KR75303962
Agilent	8493C / Attenuator(10 dB)	07/23/2015	Annual	07560
WEINSCHEL	2-3 / Attenuator(3 dB)	10/26/2015	Annual	BR0617
Weinschel	AF9003-69-31 / Step Attenuator	10/14/2015	Annual	5701
Narda	922695 / 4 Way Divider	09/22/2015	Annual	15298