OfficeServ 500 Wireless LAN

Service Manual

Ed. 00

9. 2003.

SAMSUNG

ELECTRONICS

COPYRIGHT

This manual is proprietary to SAMSUNG Electronics Co., Ltd. and is protected by copyright.
No information contained herein may be copied, translated, transcribed or duplicated for any commercial purposes or disclosed to third parties in any form without the prior written consent of SAMSUNG Electronics Co., Ltd.

TRADEMARKS

Product names mentioned in this document may be trademarks and/or registered trademarks of their respective companies.

This manual should be read before the installation and operation, and the operator should correctly install and operate the product by using this manual.

This manual may be changed for the system improvement, standardization and other technical reasons without prior notice.

For further information on the updated manual or have a question the content of manual, contact **Document Center** at the address below .

Address : Document Center 2nd Floor IT Center. Dong-Suwon P.O. Box 105, 416, Metan-3dong Paldal-gu, Suwon-si, Gyeonggi-do, Korea 442-600

e-mail : manual@samsung.com

Or contact **Call Center** at the telephone below if you have any questions or concerns regarding the operation of your system.

Phone : 81-1588-4141

http://www.samsungnetwork.com

©2003 SAMSUNG Electronics Co., Ltd. All rights reserved.

INTRODUCTION

Purpose

This service description introduces WBS24, 8WLI card, and WIP-5000M mobile phone that provide the wireless LAN function of OfficeServ 500 System. This manual contains information on installation, troubleshooting method, and MMC setting method.

Document Content and Organization

This manual is composed of 5 chapters. Each chapter is summarized as follows :

CHAPTER 1. Overview

- Overview of general wireless LAN
- Overview of OfficeServ 500 wireless LAN functions
- Diagram of system configuration
- Specifications of WBS24, 8WLI card, WIP-5000M mobile phone

CHAPTER 2. Hardware of OfficeServ 500

- 8WLI card & the front and back sides of WBS24
- Usage for each port and how to read the status of hardware through LEDs

CHAPTER 3. Installation

- How to install the 8WLI card in the OfficeServ 500 System
- How to install WBS24
- How to set DB for wireless LAN service
- How to register WIP-5000M
- How to select the location of WBS24

CHAPTER 4. MMC Programming

- How to program MMC related to the wireless LAN functions.

© SAMSUNG Electronics Co., Ltd.

CHAPTER 5. Maintenance

- How to troubleshoot problems through LED states of WBS24
- How to check the WBS24 status through a web browser
- How to upgrade the software of WBS24
- How to upgrade the software of 8WLI

ANNEX A. WLAN (802.11b/DSSS) Specifications

Features and Specifications of the 802.11b/DSSS wireless LAN standard

ANNEX B. Antenna Beam Pattern of WBS24

Antenna Beam Pattern of WBS24

ABBREVIATION

The frequently used acronyms and their meanings in this manual are all collected.

Conventions

The following special paragraphs are used in this document to point out information that must be read. This information may be set-off from the surrounding text, but is always preceded by a bold title in capital letters. The three categories of these special paragraphs are :

WARNING

Indicate a potentially hazardous situation which if not avoided, could result in death or serious injury.

CAUTION

Indicate a potentially hazardous situation which if not avoided, may result in minor or moderate injury. It may also be used to alert against unsafe practices.

NOTE

Indicates additional information as a reference

OPERATION PROCEDURES

Indicates the operation procedures that should be executed in order.

 © SAMSUNG Electronics Co., Ltd.

Reference

OfficeServ 500 Installation Description

Introduces information on how to install the OfficeServ 500 System.

OfficeServ 500 Programming Description

Introduces how to program MMC that sets up various functions of OfficeServ 500 System from a digital phone.

DS-6012L/5012L Phone Manual

This is a user's manual for the users of DS-6012L and DS-5012L, the digital phone that can be used in connection with the OfficeServ 500 System, and for the users of ITP-5012L, the IP phone.

ITP-5012L Phone Manual

This is a user's manual for the users of ITP-5012L, the IP phone that can be used in connection with the OfficeServ 500 System.

DS-5000D Series Phone Manual

This is a user's manual for the users of DS-5038D, DS-5012D and DS-5014D, the digital phone that can be used in connection with the OfficeServ 500 System.

ITP-5000D Series Phone Manual

This is a user's manual for the users of ITP-5021D and ITP-5014D, the IP phone that can be used in connection with the OfficeServ 500 System.

WIP-5000M User's Manual

This is a user's manual for the users of WIP-5000M, the mobile phone of wireless LAN provided from the OfficeServ 500 System.

Revision History

EDITION	DATE OF ISSUE	REMARKS
00	9. 2003.	First Edition

■ Regulatory Information

- FCC Information

This equipment has been tested and found to comply with limits for a class B digital device. Pursuant to Part 15 of the FCC Rules. These limits are designed to provide reasonable Protection against harmful interference in a residential installation.
This equipment can generates, uses, and radiate radio frequency energy and, if not installed and used in accordance with the instructions, may cause harmful interference to radio communications. However, there is no guarantee that interference will not occur in a particular installation.
If this equipment does cause unacceptable interference to radio and television reception, which can be determined by turning the equipment off and on, the user is encouraged to try to correct the interference by one or more of the following measures.

- Reorient or relocate the receiving antenna.
- Increase the separation between the equipment and receiver.
- Connect the equipment into an outlet on a circuit different from that to which the receiver is connected.
- Consult the dealer or an experienced Radio/TV technician for help.

■ Caution

- Changes or modifications not expressly approved by the party responsible for compliance could void the user's authority to operate the equipment.

- The antenna used for this transmitter must be installed to provide a separation distance of at least 20cm from all persons and must not be co-located or operation in conjunction With any other antenna or transmitter

© SAMSUNG Electronics Co., Ltd.

SAFETY CONCERNS

For product safety and correct operation, the following information must be given to the operator/user and shall be read before the installation and operation.

Symbols

	Caution Indication of a general caution
	Restriction Indication for prohibiting an action for a product
	Instruction Indication for commanding a specifically required action

CAUTION

Cautions against unpacking and assembling the product components

- Do not give excessive shock on the product.
- Check each connector and screw very carefully when reassembling after the components are unpacked once. The reassembled product shall not have any spaces between the housing and the base.

Cautions against mounting the 8WLI card

The 8WL card can be installed in the OfficeServ 500 System. Do not use this card on other systems.

Cautions against installing the desk WBS24

When putting the WBS24 on the desk, do not install the WBS24 at an unstable location or on a smaller prop than the WBS24 system.

Caution when setting the WBS24 SECOND IP

To use the Internet network, the first three digits of the IP assigned to the WBS24 and the first three digits of the SECOND WBS IP of the WBS24 must be identical. If the IP assigned to the WBS24 and the Station is 168.219.149.xxx, then the SECOND WBS IP of the WBS24 shall be 168.xxx.xxx.xxx.

Cautions against the roaming of the WBS24

If the PC is roamed to another WBS24 while upgrading, the upgrade will be interrupted and the flash memory will not be functioning. Accordingly, locate the PC as close as possible from the WBS24. To prevent roaming to another WBS24, it is recommended that all of the WBS24 power should be turned off for safety.

Prevention of executing the 'flo' command

If the 'flo' command is executed, the power of all base stations connected to the 8WLI card is turned off and their wireless LAN function will be interrupted.

© SAMSUNG Electronics Co., Ltd.

Cautions against handling the board

When connecting a line cord after a board is dismantled, do not place a board near metal and conductive objects.

Prevention of Electrostatic Hazards

When handling an electric component, wear an anti-static wrist strap or discharge the electrostatics from your body by touching a grounded object periodically.

This page is intentionally left blank.

© SAMSUNG Electronics Co., Ltd.

TABLE OF CONTENTS

INTRODUCTION

Purpose I
Document Content and Organization I
Conventions II
Reference III

SAFETY CONCERNS

Revision History III
Symbols V
Caution VI

CHAPTER 1. Overview

1 Overview of Wireless LAN 1-1

2 Overview of OfficeServ 500 Wireless LAN 1-2

3 Components of OfficeServ 500 Wireless LAN 1-4

3.1 OfficeServ 500 System 1-4
3.2 8WLI 1-7
3.3 WBS24 (Combo) 1-11
3.4 WBS24 (Basic) 1-14
3.5 WIP-5000M 1-17

4 Specification of OfficeServ 500 Wireless LAN 1-19

4.1 Specification of Wireless LAN 1-19
4.2 Specification of WBS24 (Combo/Basic) 1-19
4.3 Specification of WIP-5000M 1-20

CHAPTER 2. Hardware of OfficeServ 500

1 8WLI 2-1

2 WBS24 (Combo) 2-2

3 WBS24 (Basic) 2-5

CHAPTER 3. Installation

1 Installation Procedure 3-1

2 Mounting the 8WLI 3-2

3 Mounting the WBS24 3-4

3.1 Wall Type of WBS24 3-4

3.2 Desk Type of WBS24 3-7

4 Connecting the 8WLI with the WBS24 3-8

5 Setting the System DB 3-10

5.1 Setting the System KEY 3-10

5.2 Setting the System ID 3-10

5.3 Setting the WBS24 3-10

5.4 Assigning a terminal IP 3-11

5.5 Authorizing the Terminal Register 3-11

6 Registering/Clearing the WIP-5000M Terminal 3-12

6.1 Registering a WIP-5000M 3-12

6.2 Clearing a WIP-5000M 3-12

7 Positioning the WBS24 3-13

7.1 Cell Overview 3-13

7.2 Data Transmission Rate on Terminal Location 3-15

CHAPTER 4. MMC Programming

1 Before Programming 4-1

1.1 Programming Overview 4-1

1.2 Programming Button 4-2

1.3 Cautions when Programming 4-2

1.4 Programming Procedure 4-3

2 Programming 4-4

2.1 Setting the MMC845 8WLI Parameter 4-4

2.2 Setting the MMC846 WIP Information 4-9

2.3 Resetting the MMC847 WIP 11

 © SAMSUNG Electronics Co., Ltd.

2.4 Setting the MMC848 WIP Lists 4-11
2.5 Setting the MMC849 WLI REGIST 4-12
2.6 Setting the MMC830 Ethernet Parameters 4-14
2.7 Setting the MMC831 MGI Parameters 4-17

CHAPTER 5. Maintenance

1 Verifying the Status of WBS24 5-1
1.1 Status inquiry via the LED Status Indicators 5-1
1.2 Status Inquiry via a Web Browser 5-4

2 Upgrading the WBS24 S/W 5-10
2.1 Upgrading via the Web Browser 5-10
2.2 Upgrading via the Network Booting 5-16

3 Upgrading the 8WLI S/W 5-18
3.1 Connecting the Console Terminal to the 8WLI Card 5-18
3.2 Configuring the Console Terminal 5-19

ANNEX A. WLAN (802.11b/DSSS) Specifications

1 Feature Comparison with Other Standards ..... Annex A-1

2 Operating Frequency by Channel and Country ..... Annex A-2

3 Definitions and Features by Layer ..... Annex A-3
3.1 Physical Layer ..... Annex A-3
3.2 MAC Layer ..... Annex A-4
3.3 Data Link/Network Layer ..... Annex A-5

4 WLAN Frame Structure ..... Annex A-7
4.1 Short PLCP PPDU Frame Format ..... Annex A-7
4.2 Long PLCP PPDU Frame Format ..... Annex A-7

5 Quality of Service (QoS) ..... Annex A-8

6 Security ..... Annex A-8

ANNEX B. Antenna Beam Pattern of WBS24

ABBREVIATION

A~N Abbreviation-1
P~W Abbreviation-2

LIST OF FIGURES

Figure 1.1 Configuration Diagram of OfficeServ 500 Wireless LAN 1-4
Figure 1.2 8WLI Block Diagram 1-8
Figure 1.3 Block Diagram of WBS24 WBS24 (Combo) 1-14
Figure 1.4 Block Diagram of WBS24 WBS24 (Basic) 1-17
Figure 1.5 Block Diagram of WIP-5000M 1-18

Figure 2.1 Front side of 8WLI Card 2-1
Figure 2.2 Front side of WBS24 (Combo) 2-2
Figure 2.3 Back side of WBS24 (Combo) 2-4
Figure 2.4 Front side of WBS24 (Basic) 2-5
Figure 2.5 Back side of WBS24 (Basic) 2-6

Figure 3.1 The Wireless LAN Installation Procedure 3-1
Figure 3.2 Mounting the 8WLI Card (1) 3-2
Figure 3.3 Mounting the 8WLI Card (2) 3-3
Figure 3.4 Mounting the WBS24 on a Concrete Wall-Drilling a Hole 3-5
Figure 3.5 Mounting the WBS24 on a Concrete Wall-Inserting the Plastic Anchor 3-5
Figure 3.6 Mounting the WBS24 on a Concrete Wall-Tightening the Screw 3-5
Figure 3.7 Mounting the WBS24 on a Concrete Wall 3-6
Figure 3.8 Mounting the WBS24 on a concrete wall-Attach the WBS24 to its Prop 3-6
Figure 3.9 Installing a Desk WBS24 3-7
Figure 3.10 RJ-45 cable 3-8
Figure 3.11 Connecting the WBS24 with the 8WLI card 3-9
Figure 3.12 The Cell Boundary of WBS24 3-13
Figure 3.13 Single Cell Configuration 3-14
Figure 3.14 Multiple Cell Configuration 3-14
Figure 3.15 Data transmission rate on Station location 3-15

Figure 5.1 WBS24 Troubleshooting Flow Charts 5-3
Figure 5.2 Web screen for inquiring the WBS24 status (Initial screen) 5-4
Figure 5.3 Web screen for inquiring the WBS24 status (Config & Status) 5-5
Figure 5.4 Web screen for inquiring the WBS24 status (Screen for entering password) 5-6
Figure 5.5 Web screen for inquiring the WBS24 status (Restart) 5-7
Figure 5.6 Web screen for inquiring the WBS24 status (Wireless LAN statistics) 5-8
Figure 5.7 Web screen for Inquiring the WBS24 Status (Ethernet statistics) 5-9
Figure 5.8 Web screen for upgrading the WBS24 S/W (Initial screen) 5-11
Figure 5.9 Web screen for upgrading the WBS24 S/W (Screen to enter a password) 5-11
Figure 5.10 Web screen for inquiring the WBS24 S/W (Firmware upgrade) 5-12
Figure 5.11 Web screen for inquiring the WBS24 S/W (Click the [Upgrade] button) 5-13
Figure 5.12 Web screen for inquiring the WBS24 S/W (In the process of upgrade) 5-13

 © SAMSUNG Electronics Co., Ltd.

Figure 5.13 Web screen for upgrading the WBS24 S/W (Firmware Upgrade Complete) 5-14
Figure 5.14 Web screen for inquiring the WBS24 S/W (Initial screen)..... 5-15
Figure 5.15 Upgrading the WBS24 S/W via the Network Booting (1) 5-16
Figure 5.16 Upgrading the WBS24 S/W via the Network Booting (2) 5-17
Figure 5.17 Connecting Cable of the Console Terminal 5-18
Figure 5.18 Connecting the Console Terminal to the 8WLI Card 5-18

Figure A.1 Data Link/Network Layer of WLAN-Ad hoc Network Model .....Annex A-5
Figure A.2 Data Link/Network Layer of WLAN-Infra Network Model .....Annex A-6
Figure A.3 Short PLCP PPDU Frame Format of WLAN.....Annex A-7
Figure A.4 Long PLCP PPDU Frame Format of WLAN .....Annex A-7

Figure B.1 Beam Pattern of WBS24 Antenna .....Annex B-1

LIST OF TABLES

Table 1.1 Interrupt Information on 8WLI CPU 1-9
Table 1.2 General Specification of Wireless LAN 1-19
Table 1.3 Specification of WBS24 (Combo/Basic) 1-19
Table 1.4 Specification of WIP-5000M 1-20

Table 2.1 LED states of WBS24 (Combo) 2-3
Table 2.2 LD1 and LD2 states of WBS24 (Combo) 2-3
Table 2.3 Functions of WBS24 (Combo) Ports 2-4
Table 2.4 LED states of WBS24 (Basic) 2-5
Table 2.5 Functions of WBS24 (Basic) Ports 2-6

Table 3.1 Twisted Pair cable specifications 3-8
Table 3.2 Data transmission rate on Station location 3-15

Table 4.1 Program buttons 4-2
Table 4.2 Wireless LAN related MMC 4-4
Table 4.3 MMC830 Parameters 4-14
Table 4.4 MMC831 Parameters 4-17

Table 5.1 WBS24 LED Status and Meaning of the WBS24 5-2
Table 5.2 Status of WBS24 LD1, LD2 LEDs 5-2
Table 5.3 Main menu of the web screen for inquiring the WBS24 status 5-4

Table A.1 Feature Comparison with WLAN (802.11b/DSSS) Standards ..... Annex A-1
Table A.2 Operating Frequency of WLAN (802.11b/DSSS) by Channel and Country ..... Annex A-2
Table A.3 Information on the Data Rate of DSSS Physical Layer ..... Annex A-3

 © SAMSUNG Electronics Co., Ltd.

CHAPTER 1

Overview

This chapter describes the general introduction of wireless LAN, functions of OfficeServ 500 wireless LAN, components of OfficeServ 500 wireless LAN, and specifications for WBS24, 8WLI Card and WIP-5000M mobile phone.

1 Overview of Wireless LAN

The LAN can be distinguished into two different kinds, wired LAN and wireless LAN, depending on the mobility and presence of stations.
The wireless LAN converts data between personal computers or between servers into radio waves or optic signals, and transfers/receives them wirelessly. When installing a network, either radio frequency(RF) or light is used to install a network from hub to client.

Advantages of Wireless LAN

The advantage of using LAN are described as follows :

- Installation and maintenance are simple that the relevant personnel and equipment can be easily replaced. There is no need to do additional power line work.
- It is easy to install a network in an emergency situation
- It supports full user mobility in such applications as mobile station and portable terminal.
- It solves cabling problems on the open sites where wiring is difficult, such as exhibition, seminar, registrar, temporary building, and construction site.
- It solves the problems of network stoppage during natural disasters.
- It provides user mobility for mobile station and portable terminals in such areas as the department stores, museums and factories.

2 Overview of OfficeServ 500 Wireless LAN

The OfficeServ 500 system, which is the key telephone system of Samsung, offers voice or data service in a wireless LAN and can simultaneously send/receive voice and data.
The wireless LAN service is offered through WLAN Base Station 2.4 GHz(WBS24), which is an Access Point(AP) device. The WBS24 is classified into two types as follows :

Wireless LAN Service Through the WBS24 (Combo)

The WBS24(Combo) interfaces with the OfficeServ 500 system through LAN and offers the voice/data service.

- WBS24(Combo) : Offers the voice service through the 8WLI card that functions as the wireless LAN. One 8WLI card supports up to eight WBS24(Combo)s.
- The WIP-5000M is used as a terminal for the voice service.
- Laptops on which a wireless LAN card is mounted or PDAs are used for the data service.

Wireless LAN Service Through the WBS24(Basic)

The WBS24(Basic) interfaces with the IP network through LAN and offers the voice/data service.

- WBS24(Basic) : MGI1/2/3 or ITM3, which functions as a VOIP gateway, offers the voice data.
- The WIP-5000M is used as a terminal for the voice service.
- Laptops on which a wireless LAN card is mounted or PDAs are used for the data service.

Major Functions

The wireless LAN of OfficeServ 500 System has the following features :

- Wireless Standard : IEEE 802.11b
- Data rate : 11 Mbps(Max), 5.5 Mbps, 2 Mbps, 1 Mbps
- Modulation : CCK, BPSK, QPSK
- Network architecture : Ad-hoc, Infrastructure
- Security Function : WEB 64/128-bit encryption
- Output Power : Max. 100mW(NIC Card 70mW)
- Channels : 13 channels(Korea)/11 channels(USA)
- Interface : PCMCIA
- Frequency : 2400~2483.5 MHz
- Antenna Gain : 2.0 dBi
- Beam-Width : Omni directional(Dipole)
- Diversity Support

 © SAMSUNG Electronics Co., Ltd.

- The voice service is provided even in no-wired LAN environment.
- The quality of service(QoS) is guaranteed using the exclusive voice path.
- Since the OfficeServ 500 System supplies power remotely to the WBS24, no separate electric wiring work is needed.
- The transmission distance between the OfficeServ 500 System and the WBS24 is 600 meters, so the cell can be easily designed.
- Since the built-in phone function is supported, a phone number can be assigned instead of an IP address when registering a user.
- The call path generation/maintenance and handover functions are provided.
- The echo cancellation and voice codec(G.729, G.723.1) functions are provided.
- The system supports the back-up battery, so the phone conversation can be maintained during an electric failure.
- Even if the ISM band is used, the VoIP is supported. So, there are almost no interferences.
- Easy upgrade
- AP O & M function

NOTE

Extension of the transmission distance

In case of the wired LAN, the transmission distance is only 100 meters in maximum. To extend the distance, either hub or repeater is needed.

3 Components of OfficeServ 500 Wireless LAN

Review the configuration diagram of OfficeServ 500 System below and understand the equipment implementing the wireless LAN functions and their operational principles.

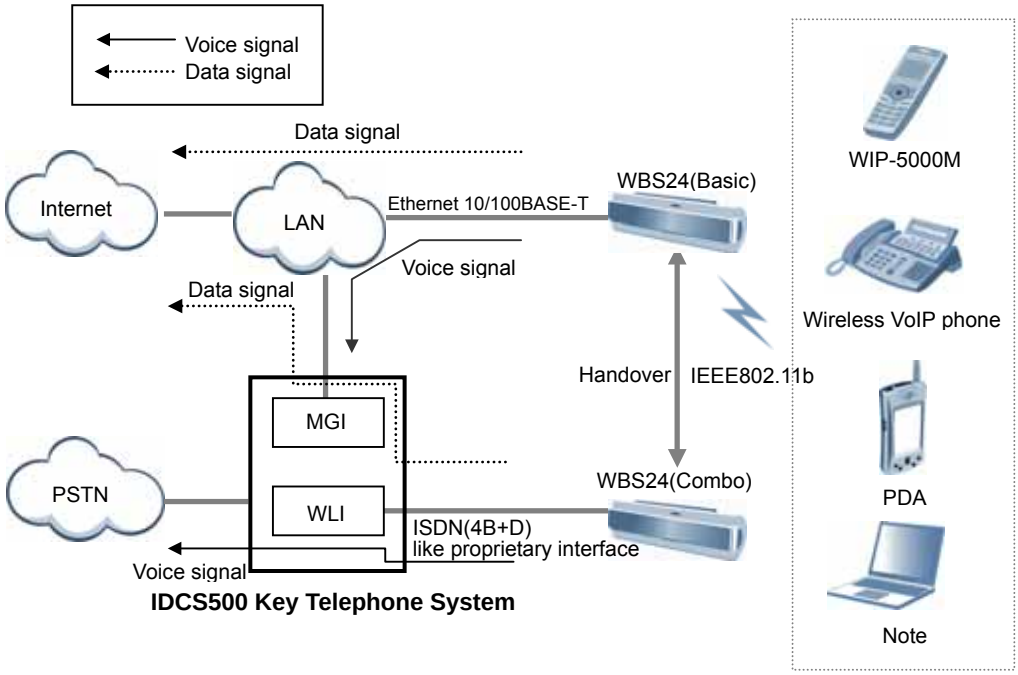

Figure 1.1 Configuration Diagram of OfficeServ 500 Wireless LAN

3.1 OfficeServ 500 System

3.1.1 Overview

The OfficeServ 500 System is the primary device of phone that provides the wireless LAN service.
With the application of the most advanced technologies like VoIP and LAN, the OfficeServ 500 can connect various multimedia devices in offices where Internet is actively used. The OfficeServ 500 is the up-to-date digital exchange system that can be also used as the phone system or PABX system.
The OfficeServ 500 System can be composed of two types, OfficeServ-M and OfficeServ-L, depending on the scalable line capacity and provided functions. The OfficeServ-M supports a maximum of 192 lines, and the OfficeServ 500-L can be scaled up even a maximum of 500 lines.
The OfficeServ 500 System introduced the VoIP(Voice over Internet Protocol) technology, recently becoming popular, so that the system can provide an Internet phone service through the IP network(Internet) without additional pieces of equipment The Internet phone service allows users to have long distance calls and international calls with only local call charge.

 © SAMSUNG Electronics Co., Ltd.

Also, if the 10 M/100 Mbps LAN port, which is provided by the OfficeServ 500 System, is used, the application program like the PCMMC(PC for programming) uses can be used while connected to Ethernet.
The OfficeServ 500 System supports the Q-Sig networking function that performs call transfer, DND(Do Not Disturb), CCBS(Call Completion to Busy Subscriber), and CCNR(Call Completion on No Reply) between the OfficeServ 500 systems, regardless of the physical location of the system.
Since both hardware and software in the OfficeServ 500 System are designed with module-based method, upon the need of users, the main line or subscriber's line can be easily scaled up or a new software can be installed to add new functions even during the operation.
Connecting various terminals and additional equipment, the OfficeServ 500 System can make an integrated environment that provides effective and various services for wireless LAN users to keep pace with the high speed network and digitalized office environment.

3.1.2 Major Functions

The major functions of OfficeServ 500 System are described as follows :

Application of New Technology

The OfficeServ 500 System uses the following new technologies to upgrade the digital exchange system.

Support for VoIP (Voice over Internet Protocol)

- 10M/100Mbps LAN Port is provided.
- Q-Sig networking is supported.
- Various kinds of highly integrated card(ITM3, MGI1/2, and TEPRI card)
- Powerful system diagnostic/management program is provided.
- New key set(DS Series, IP Phone, and Wide LCD) is supported.
- The functions of wireless voice and data using the wireless LAN are provided.

Compatibility with the existing system

At the cabinet of OfficeServ 500 System, most cards of existing SKP-180D phone system can be mounted as they are. Also, the existing terminal can be connected. Therefore, the cost saving will be great when expanding the capacity and performance of existing phone system.

Ease of System Installation

Since the OfficeServ 500 System is designed with module-based method, hardware or software, such as card or cabinet, can be easily added. To the universal slot of cabinet, any cards can be mounted, such as the main card or extension card, the ISDN card and other cards providing premium services.

The system programming can be done with the system-connected terminal or PC. Also, the system configuration can be changed easily according to the user's requirements.

Ease of System Scalability

If the OfficeServ 500 System is used, there is no need to put in much effort and expenses to add new functions.
For the OfficeServ -L System case, a maximum of 3 cabinets can be scaled up.
For the 8DLI card, a single line can be scaled up by mounting KDB-S or KDB-D on the digital phone, without a separate line.

Convenient Maintenance

In order to maintain and repair the system more conveniently, the following functions are provided.

- Programming PC(PCMMC)
  - The programming PC is used for maintaining and repairing the OfficeServ 500 System. If the programming PC is used, various types of information at the system can be inquired or controlled using the program menu.

- DPAP-MNA
  - The DPAP-MNA is an application software solution that can remotely manage the OfficeServ 500 System. The DPAP-MNA provides many functions, such as site management(new registration, modification, deletion and print), indication of events received from the OfficeServ 500 System, troubleshooting of system problems, program uploading using FTP, and output of traffic information.

NOTE

The installing and programming methods of DCS 500 System

Refer to 'OfficeServ Installation Manual' and 'OfficeServ 500 Programming Manual' for the installing and programming methods of OfficeServ 500 System, the main component.

 © SAMSUNG Electronics Co., Ltd.

3.2 8WLI

3.2.1 Overview

The 8WLI card, a service board providing the wireless solution to the OfficeServ 500 System, provides the wired interface in between the OfficeServ 500 System and WBS24(WLAN Base Station 2.4 GHz), which is the wireless LAN's AP(Access Point).
The wired interface method, a digital method, uses 2B+1D DASL(Digital Adapter Subscriber Loops), and communicates with the upper main CPU board using the DPRAM(Dual Ports RAM) interface of the IPC(Inter Processor Channel) for transmitting/receiving messages.

A maximum of one 8WLI card can be mounted on the OfficeServ 500 System, and the 8WLI can interoperate with a maximum of 8 WBS24s. Since two DASL lines are connected to one WBS24, simultaneous phone calls are possible through 4 voice channels of 2 x(2B+1D). Therefore, one 8WLI board can support a maximum of 32 voice channels.
The WBS24 is supplied of –48 V DC power through the DASL line, and can transmit/receive voice and signaling data in between the 8WLI and WBS24.

3.2.2 Major Functions

The major functions of 8WLI card are as follows :

- Provides the wired interface between the AP(Access Point) and the system to transmit/receive voice and signaling data.
- Supports 32 voice channels for each card.
- Either provides or blocks -48V DC power supply to the WBS24.
- Performs the initiation for the VoIP over WLAN service.
- Manages information on all terminals for voice service and provides the service to only authorized terminal.
- Provides the initial registration service for wireless IP-Phone(WIP-5000M).
- Provides the calling service to a terminal for voice service.
- Supports the mobility between access points, as well as the handover function for a terminal for voice service.
- Interfaces with the main CPU board of OfficeServ 500 System.

3.2.3 8WLI Block

Introduces the block diagram of 8WLI card and the functions of each block.

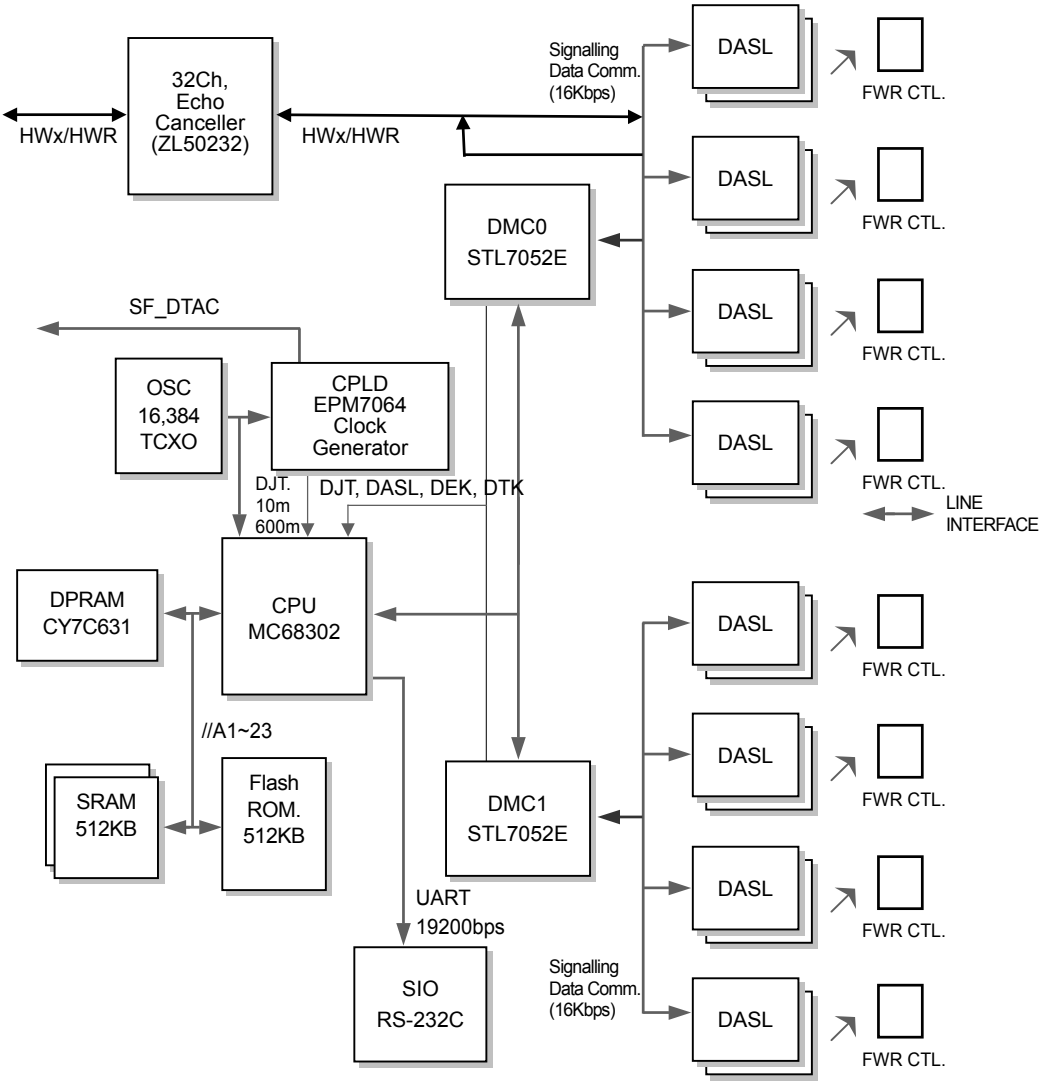

Figure 1.2 8WLI Block Diagram

 © SAMSUNG Electronics Co., Ltd.

Main Processor

The main CPU used in the 8WLI is Motorola's MC68000/MC68008 core series, which enhanced the communication function.
The major specification of CPU is as follows :

- Supports the interrupt mode(Normal/Dedicated mode)
- Supports On-Chip 1152 byte Dual Port RAM
- Supports 3 timers
- Supports the selection of 4 programmable chips
- Supports 3 SCCs(Serial Communication Controllers)
- Supports various protocols
- Supports various physical interfaces

The CPU is the central control part that leads the performance of programs in the board, and basically controls the memory and main components for performing the program. The clock used for the program performance is the oscillator with 16.384MHz frequency, and transmits/receives 16bits data operating with the memory. The interrupts are handled using the dedicated modes, and their uses are described in the table below.

Table 1.1 Interrupt Information on 8WLI CPU

Level()	Name	Remarks	
NMI(7)	ABORT	For debugger	Since several interrupts data are multiplexed onto level4, the processing of DMC RX and TX interrupts may get affected. To prevent this, 10ms interrupt is lowered to level3 by S/W while performed routinely. So, even during the 10m sec interrupt performance, the DMC UART interrupt can be processed.
INT(6)	DASL INT	16×DASL	
INT(4)	DMC RX0	PB11(4×DASL)	
INT(4)	DMC RX1	PB10(4×DASL)	
INT(4)	10m sec	TIMMER1	
INT(4)	SIO	SCC3	
INT(4)	INT TX0	PB9(4×DASL)	
INT(4)	INT TX1	PB8(4×DASL)	
INT(1)			

Flash Memory

The OfficeServ 500 System uses the flash memory of 512Kword capacity.
The AM29F800B of AMD is used, and this operates with the CPU on the 16 bits mode for transmitting/receiving data.
In the flash memory, the programs for the 8WLI to perform the relevant functions, including a booting program, are saved. When the program is changed, the program can be upgraded using SIO(Serial Input Output) through the UART.

SRAM

Two SRAMs of 256 Kbyte X 2 capacity are used, and they operate with the CPU on the 16 bits mode for transmitting/receiving data. The KM684000LT of SAMSUNG is used.

Asynchronous Dual Port RAM

The DPRAM is used for data transmission with the main board of OfficeServ 500 system.
The components used for IPC(Inter-processor communication) are the CY7C136-55NC of Cypress, and this can read/write 2Kbyte data at the same time.

DMC (Digital Module Control)

The 8WLI has 16 DASL links. To control these, one DMC chip is used for 8 DASLs. Therefore, a total of 2 DMC components are used, and the used components are STL7052E SAMSUNG ASIC. They can handle interrupts and process data channel transmission. The major functions are described as follows :

- The DMC buffers serial data from 8 DASL transmission chips and transferred to the CPU, and serially transfers the transmission data from the CPU to each DASL.
- The DMC muxes the interrupts occurred at the initial activation of DASL to send one source to the CPU, and saves the event changes for each DASL transmission chip.
- The DMC assigns highway timeslot for each DASL chip to be able to program.

DASL (Digital Adapter Subscriber Loops)

The wired interface between the 8WLI and AP(WBS24) uses the DASL components of NS. One DASL link has the transmission speed at 144kbps, and there are 2B+1D 2 voice channels and one data channel. Since two DASLs for each WBS24 are used, there are 4B+2D, 4 voice channels and 2 data channels. However, only one data channel from 2 data channels are used, leaving the one at rest. Also, the transmission speed of data channel is set at 16 kbps.
The DASL link is connected to two wired cables, so each AP(WBS24) is connected to 4 wired cables. The 24AWG UPT(Unshielded Twisted Pair wire) cable is used, and the maximum extension distance is 600M.

Echo Canceller (ZL50232)

Impedance might be mismatched or line echo might occur due to delay during data processing in the hybrid system. To remove the echo, add the Echo Canceller in the voice path. The default of the echo tail(echo length) is 64 ms and the echo tail can be expanded to 128 ms.

 © SAMSUNG Electronics Co., Ltd.

Power Supply

The power of WBS24 is supplied from the system using the remote power feeding method. So, -48V DC power of the system is supplied from the 8WLI to the WBS24 through the DASL transmission line. The transmission cable connected between the WBS24 and the system is composed of 4 strands grouped into 2 pairs. The ground polarity is supplied to one pair(2 strands), and to the other pair(2 strands), -48 V voltage DC power is supplied. The maximum wire distance that power can be supplied is 600M, in case of 24AWG UTP(Unshielded Twisted Pair wire) cable.

3.3 WBS24 (Combo)

3.3.1 Overview

The WBS24(Combo) is the AP(Access Point) for using the wireless LAN service.

NOTE

AP(Access Point)

AP(Access Point), one of the wireless LAN devices, connects the wired LAN to the wireless LAN. AP is usually a stand-alone device, which can be used by plugging into Ethernet hub or a server. One AP hands off to another AP depending on the location of a user, just like cellular phone does. Therefore, a user can use a mobile phone while moving around.

3.3.2 Major Functions

The major functions of WBS24(Combo) are as follows :

- Provides the wireless RF interface that meets IEEE 802.11b, the wireless LAN standard.
- Provides the wired LAN interface that meets IEEE 802.3, the wired LAN standard.
- Provides the wired interface with OfficeServ 500 System whose speed is 144 Kbps and whose channel is 2B+1D.
- Provides voice communication through OfficeServ 500 System using a Voice over WLAN phone.
- Provides a wireless data service to data terminals that have the wireless LAN interface.
- Separates the wirelessly received voice and data from each other and transmits them to OfficeServ 500 System and LAN.(If a voice message(signal) is received, it is transmitted to OfficeServ 500 System. If a data message(signal) is received, it is transmitted to LAN.)
- Provides the compression and decompression of PCM voice data.

3.3.3 Interface

The WBS24(Combo) consists of wire processing part and wireless processing part. The wire processing part has two wire interfaces : ISDN BRI interface connected to OfficeServ 500 system and IEEE 802.3 Ethernet connected to LAN. The wireless processing part has 2.4 GHz frequency bandwidth of wireless LAN, which complies with the RF interface based on IEEE 802.11b standard.

Wired Interface Interworking with the OfficeServ 500 System

From a wired interface, the ISDN BRI interworks with OfficeServ 500 System. The ISDN BRI service is implemented using the Digital Adapter Subscriber Loops(DASL) chip of National Semiconductor Co., Ltd. This is not a standard ISDN BRI chip, but Samsung uses it own protocols. Its data transmission speed is 144 Kbps and there are two voice channels and one data channel. The wired section, which inter-works with OfficeServ 500 System, sends and receives signaling data for voice data transmission as well as voice communication.

Wired Interface Interworking with LAN

The wired Ethernet interface can access to LAN with the 10/100BASE-T port and send/receive data via Internet, other than voice. The wireless processing part can send/receive voice data for wireless voice communication, as well as data for wireless access to Internet. The maximum data transmission speed between wireless sections is up to 4 to 5 Mbps. One unit of WBS24(Combo) can process simultaneous calls on 4 channels.

Wireless Interface

The wireless interface uses 2.400 to 2.4835 GHz of wireless frequency bandwidth and meets the IEEE 802.11b standard. Voice can be sent and received across the wireless sections using a voice-specific terminal. The Voice over WLAN sends/receives the voice packet data, and laptop computers and PDA send/receive the data packet across the wireless sections. 13 wireless channels are used in Korea and 11 wireless channels are used in the U.S.
The wireless interface occupies 22 MHz of bandwidth per wireless channel and the interval between center frequencies is 5 MHz. Therefore, to be a clear channel that does not interfere with other wireless channels, it should be 4 channels away from other channels. The wireless processing part sends/receives voice data for wireless voice communication, as well as data for wireless access to Internet. The maximum data transmission speed between wireless sections is up to 4 to 5 Mbps. One unit of WBS24(Combo) can process simultaneous calls on 4 channels.

 © SAMSUNG Electronics Co., Ltd.

3.3.4 Application Specifications

The WBS24(Combo) is designed to meet both specifications of wireless type and electromagnetic compatibility(EMC) as follows :

Type Registration (Domestic Specification)

Among different types of wireless equipment that use radio wave signals, the following equipment, available to the general public, shall be approved of its type. The following tests shall be conducted according to the standards of 'Specific Output Wireless Equipment for Wireless LAN'.

1) The absolute gain of sending antenna shall be less than 6 dBi. However, the stationary point-to-point wireless equipment shall be less than 20 dBi.
2) Frequency tolerance shall be less than ±50×0-6.
3) The power density supplied to the feeder of sending antenna shall be less than 10mW when it is measured based on 1 MHz of resolution bandwidth.
4) The occupied frequency bandwidth shall be less than 26 MHz

Registration of Electromagnetic Compatibility (Domestic Specification)

The wireless equipment to be homologated(or registered) for electromagnetic compatibility shall have the following requirements :

1) Input, output, save, search, transmit or control functions for data and communication messages
2) Have one or more terminal port that operates as for information only
3) Have less than 600 volts of voltage supply
   As for information equipment to be homologated, the registration of electromagnetic compatibility will not be authorized separately, but it will be processed together with the type registration. Therefore, a test transcript for electromagnetic compatibility should be submitted when applying for homologation(for office appliances).

3.3.5 WBS24 (Combo) Block

The block diagram of WBS24(Combo) and functions for each block are as follows.

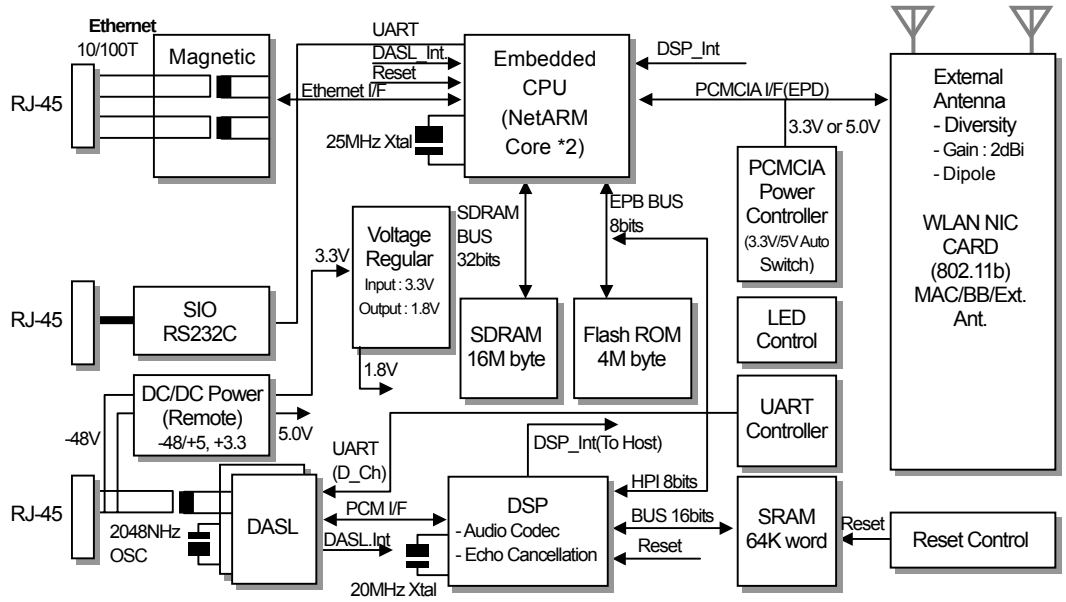

Figure 1.3 Block Diagram of WBS24 WBS24 (Combo)

3.4 WBS24 (Basic)

3.4.1 Overview

The WBS24(Basic) is the AP(Access Point) for using the wireless LAN service.

3.4.2 Major Functions

The major functions of WBS24(Basic) are as follows :

- Provides the wireless RF interface that meets IEEE 802.11b, the wireless LAN standard.
- Provides the wired LAN interface that meets IEEE 802.3, the wired LAN standard.
- Provides voice communication through OfficeServ 500 System using a Voice over WLAN phone.
- Provides a wireless data service to data terminals that have the wireless LAN interface.
- Separates the wirelessly received voice and data from each other and transmits them to OfficeServ 500 System and LAN.(If a voice message(signal) is received, it is transmitted to OfficeServ 500 System. If a data message(signal) is received, it is transmitted to LAN.)
- Provides the compression and decompression of PCM voice data.

 © SAMSUNG Electronics Co., Ltd.

3.4.3 Interface

The WBS24(Basic) consists of wire processing part and wireless processing part. The wire processing part has a wire interfaces : IEEE 802.3 Ethernet connected to LAN. The wireless processing part has 2.4 GHz frequency bandwidth of wireless LAN, which complies with the RF interface based on IEEE 802.11b standard.

Wired Interface Interworking with LAN

The wired Ethernet interface can access to LAN with the 10/100BASE-T port and send/receive data via Internet, other than voice. The wireless processing part can send/receive voice data for wireless voice communication, as well as data for wireless access to Internet. The maximum data transmission speed between wireless sections is up to 4 to 5 Mbps. One unit of WBS24(Basic) can process simultaneous calls on 4 channels.

Wireless Interface

The wireless interface uses 2.400 to 2.4835 GHz of wireless frequency bandwidth and meets the IEEE 802.11 b standard. Voice can be sent and received across the wireless sections using a voice-specific terminal. The Voice over WLAN sends/receives the voice packet data, and laptop computers and PDA send/receive the data packet across the wireless sections. 13 wireless channels are used in Korea and 11 wireless channels are used in the U.S.
The wireless interface occupies 22 MHz of bandwidth per wireless channel and the interval between center frequencies is 5 MHz. Therefore, to be a clear channel that does not interfere with other wireless channels, it should be 4 channels away from other channels. The wireless processing part sends/receives voice data for wireless voice communication, as well as data for wireless access to Internet. The maximum data transmission speed between wireless sections is up to 4 to 5 Mbps. One unit of WBS24(Basic) can process simultaneous calls on 4 channels.

3.4.4 Application Specifications

The WBS24(Basic) is designed to meet both specifications of wireless type and electromagnetic compatibility(EMC) as follows :

Type Registration (Domestic Specification)

Among different types of wireless equipment that use radio wave signals, the following equipment, available to the general public, shall be approved of its type. The following tests shall be conducted according to the standards of ‘Specific Output Wireless Equipment for Wireless LAN’.

1) The absolute gain of sending antenna shall be less than 6 dBi. However, the stationary point-to-point wireless equipment shall be less than 20 dBi.
2) Frequency tolerance shall be less than ±50×0-6.

3) The power density supplied to the feeder of sending antenna shall be less than 10mW when it is measured based on 1 MHz of resolution bandwidth.
4) The occupied frequency bandwidth shall be less than 26 MHz

Registration of Electromagnetic Compatibility (Domestic Specification)

The wireless equipment to be homologated(or registered) for electromagnetic compatibility shall have the following requirements :

1) Input, output, save, search, transmit or control functions for data and communication messages
2) Have one or more terminal port that operates as for information only
3) Have less than 600 volts of voltage supply

As for information equipment to be homologated, the registration of electromagnetic compatibility will not be authorized separately, but it will be processed together with the type registration. Therefore, a test transcript for electromagnetic compatibility should be submitted when applying for homologation(for office appliances).

 © SAMSUNG Electronics Co., Ltd.

3.4.5 WBS24 (Basic) Block

The block diagram of WBS24(Basic) and functions for each block are as follows.

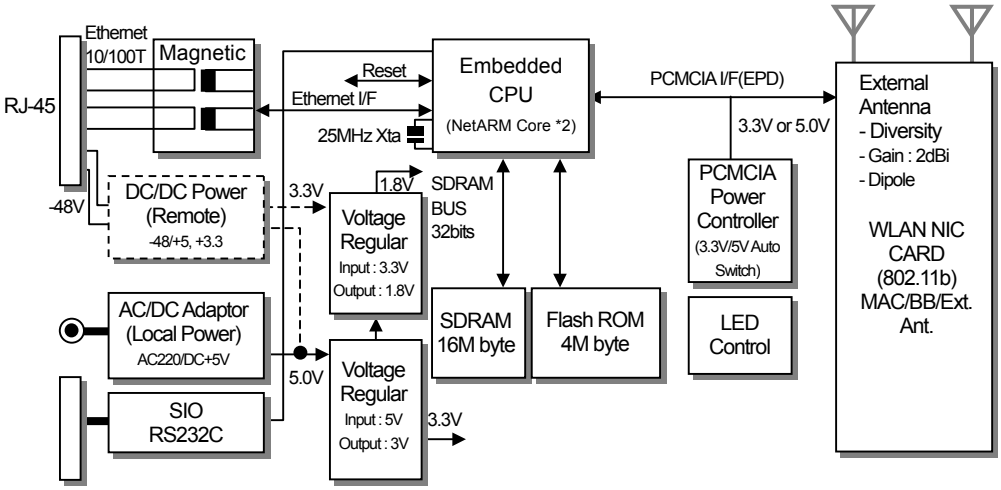

Figure 1.4 Block Diagram of WBS24 WBS24 (Basic)

3.5 WIP-5000M

3.5.1 Overview

The WIP-5000M(Wireless IP-Phone Mobile type) is the wireless mobile phone that allows a voice communication through IEEE 802.11b wireless LAN. As the wireless IP phone, the voice data is compressed into a packet form(Voice over WLAN) to satisfy the wireless LAN specifications and the data is transferred/received through IP network. When moving between Access Points(WBS24), as well as between the data terminals like laptop computers with wireless LAN card, the handover function is supplied. The major functions of WIP-5000M are described as follows :

- Supports the wireless LAN specification of IEEE802.11b.
- Supports the SIP protocols in order to support the VoIP.
- Supports various voice codecs.(G.711, G.726, G.723, and G.729)
- Provides the echo suppression function.
- Supports the display service of incoming VMS-messages(Voice Mailing System).
- Supports the message service provided from the phone of OfficeServ 500 System.
- The system upgrade can be done through the wireless LAN.

Laptop computers, PDA and IP Phone, except the WIP-5000M, can use general-purpose equipment.

3.5.2 WIP-5000M Block Diagram

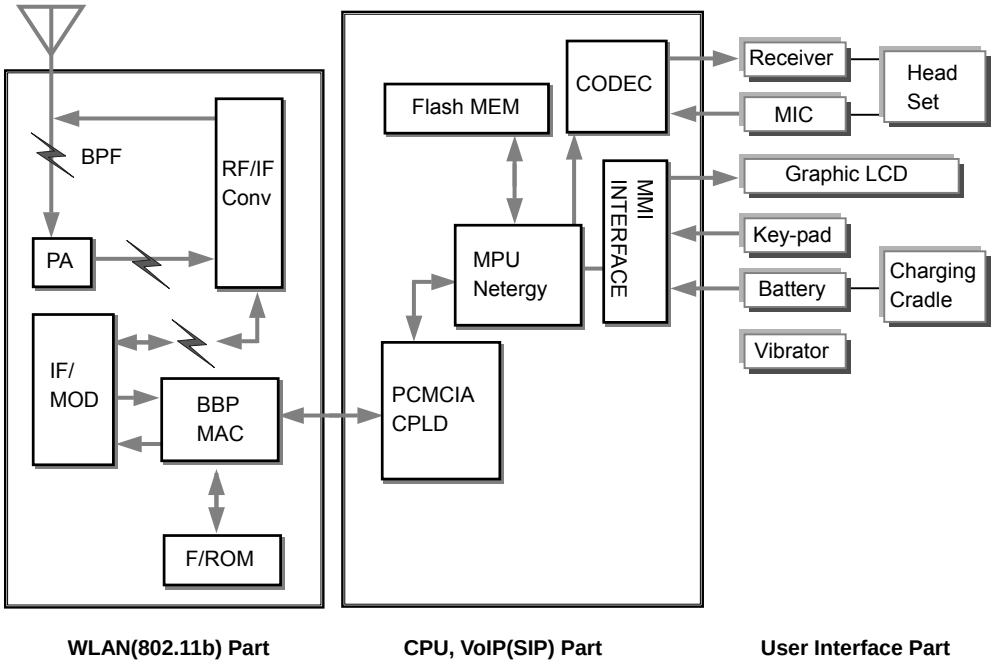

Figure 1.5 Block Diagram of WIP-5000M

The WIP-5000M is largely divided into 3 parts as below :

Wireless LAN Part

The wireless method used for the WIP-5000M is the IEEE802.11b Wireless LAN specification at the 2.4GHzbandwith.
Also, the major components of wireless LAN are the Prism2.5 of Intersil, and are composed of 4 components, such as ISL3984(PA), HFA3783(IF I/Q MOD. DEMOD.), ISL3685, and MAC/BBP ISL3873B.

CPU, VoIP (SIP) Part

The CPU used for the WIP-5000M is a combined type that the RISC and DSP functions are combined into one processor. That is, there is no need for a separate DSP when processing voice for the Voice over WLAN. Also, the internal SRAM allows the program performance possible without a separate external memory.
The major functions for the main processor are summarized as the wireless LAN, control of other major components, processing of voice codecs, and echo removal.

The user interface part

The user interface part can provide various and convenient functions using graphic LCDs and navigation key.

 © SAMSUNG Electronics Co., Ltd.

4 Specification of OfficeServ 500 Wireless LAN

This section introduces the relevant specifications of OfficeServ 500 Wireless LAN.

4.1 Specification of Wireless LAN

Table 1.2 General Specification of Wireless LAN

Category	Specification
Primary Device	OfficeServ 500
Number of mountable 8WLI Card	1 8WLI/ OfficeServ 500
Number of AP(WBS24(Combo))	8 WBS24(Combo)/8WLI
Number of Subscribers	48 user/8WLI
Scope of transmission throughput	50M in house(may vary depending on the frequency jamming material in the office) 200M outside the building(No frequency jamming material within the line of sight distance)
Extended Distance of wiring	Maximum of 600M
Number of voice channels that allow simultaneous phone conversations.	32 call/8WLI
	4 call/WBS24(Combo)

4.2 Specification of WBS24 (Combo/Basic)

Table 1.3 Specification of WBS24 (Combo/Basic)

Category	Specification
Standard of Interface Specification	WLAN : 802.11b VoIP : SIP Protocol
RF frequency	2.412~2.462 GHz
RF Output Power(EIRP)	Maximum of 18dBm
Cell Implementation	3 clear channel
Ethernet	10/100BASE-T
Voice Codec	G.711/G729A/G726
Size	328(width) x 80(length) x 41(height) mm
Weight	About 1kg
Power	WBS24(Combo) : -48 V(supplied from the system) WBS24(Basic) : AC/DC Adaptor(220V/5 V)
Antenna	2 External Antenna Diversity
LED	Power, Voice1, Voice2, Link, Data, Wireless
External Connector	External power jack, RJ45 LAN, RJ45 API, RJ45 SIO, and PCMCIA slots

4.3 Specification of WIP-5000M

Table 1.4 Specification of WIP-5000M

Category	Specification
Standard Interface Specification	WLAN : 802.11b, VoIP : SIP Protocol
RF frequency	2.412~2.462 GHz
RF output power(EIRP)	Maximum of 13dBm
Transmission Protocols	DSSS(Direct Sequence Spread Spectrum)
Voice Codec	G711/G729A/G723.1
Size	125(width)x45(length)x24(height) mm
Weight	About 95g
Battery	3.8V Li-Ion /800 mA
Conversation Time(Call Duration)	2.5 hour
Call Waiting Time	25 hour
Composition	LCD : the line indicating 8 icons, 4 character input lines
	Key pad
	External battery charger
	Antenna : Super sensitive antenna

NOTE

The OfficeServ 500 **System specification**

Refer to 'OfficeServ 500 Installation Manual' for the OfficeServ 500 system specification.

 © SAMSUNG Electronics Co., Ltd.

CHAPTER 2

Hardware of OfficeServ 500

This chapter examines the 8WLI card that provides the wireless LAN function of OfficeServ 500 the WBS24(Combo), WBS24(Basic)and the front/back sides of WIP-5000M. Also, this chapter describes how to use each port and how to check the status of equipment through the LED indicators.

1 8WLI

The 8WLI(Wireless LAN Interface) card shall be mounted on the OfficeServ 500 System, and this card is loaded with the wireless LAN function.

Front Side

The front of 8WLI card is shown below.

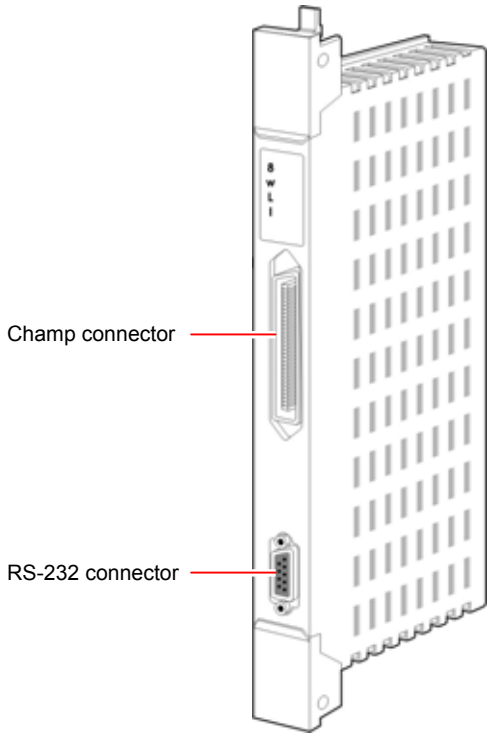

Figure 2.1 Front side of 8WLI Card

Champ Connector

Composed of 50 pins. This champ connector is used for connecting the WBS24.

RS-232C Connector

Composed of 9 pins. This connector is used for connecting the console terminal to download the software of 8WLI card.

2 WBS24 (Combo)

The WBS24(Combo) is the AP for using the 2.4GHz wireless LAN service.

Front Side

The front side of WBS24(Combo) is shown below.

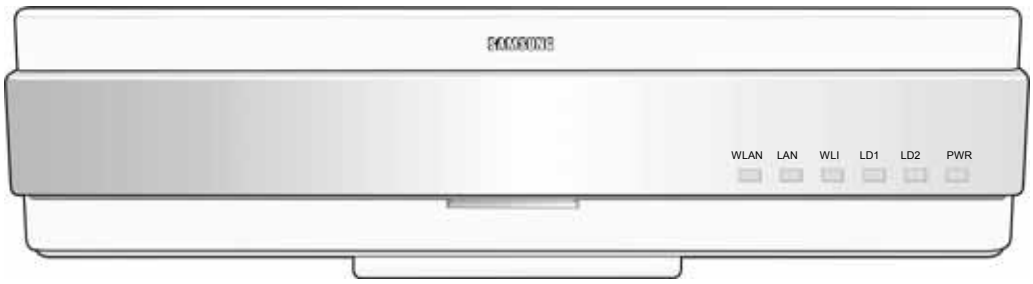

Figure 2.2 Front side of WBS24 (Combo)

 © SAMSUNG Electronics Co., Ltd.

LED

The LEDs are placed on the front side of WBS24(Combo) to show the status of WBS24(Combo) equipment. The LED states are described in the following table.

Table 2.1 LED states of WBS24 (Combo)

LED Name	Function	Blue LED On	Blue LED Off	Blue LED Blinking
WLAN	Wireless LAN is operating	Wireless LAN is normally operating	Wireless LAN is not operating	Data is transmitted/received through wireless LAN.
LAN	LAN is operating	LAN is normally operating	LAN is normally not operating	Data is transmitted/received through LAN.
WLI	Connected with 8WLI	Normally connected with 8WLI	Not connected with 8WLI	Data is transmitted/received through the 8WLI card and DASL line.
LD1	Indicating the B channel in use.	Refer to the Table below.		
LD2	Indicating the B channel in use.	Refer to the Table below.		
PWR	Power is on	Power is normally supplied.	Power is not normally supplied.	-

Table 2.2 LD1 and LD2 states of WBS24 (Combo)

B channel No. on busy	States of LD1	States of LD2
0	Blue LED Off	Blue LED Off
1	Blue LED blinking periodically	Blue LED Off
2	Blue LED On	Blue LED Off
3	Blue LED On	Blue LED blinking periodically
4	Blue LED On	Blue LED On

NOTE

The status of WBS24(Combo)

Refer to ‘Chapter 5 Maintenance’ of this manual for how to inquire the status of WBS24(Combo) through the LEDs in detail.

Back Side

The backside of WBS24(Combo) is as shown below.

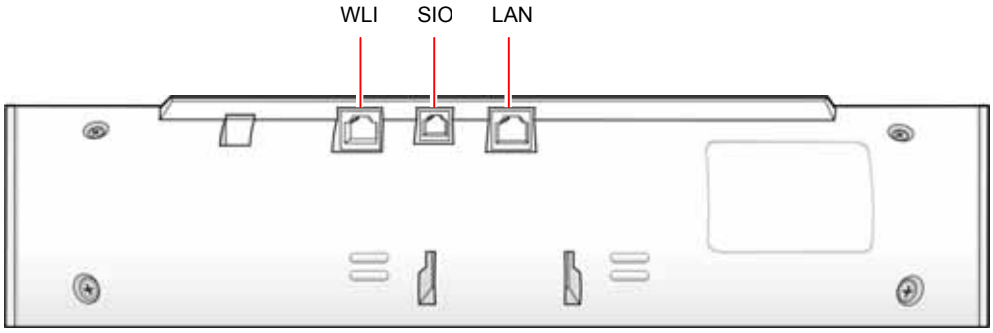

Figure 2.3 Back side of WBS24 (Combo)

Port

The ports on the back of WBS24(Combo) and their functions are described as follows :

Table 2.3 Functions of WBS24 (Combo) Ports

LED Name	Functions
WLI	Connecting the RJ-45 connector of twisted pair cable that is connected with the 8WLI card.
SIO	RS-232C type of connecting port used for monitoring the operational status of WBS24(Combo).
LAN	Wired Ethernet port that connects the RJ-45 connector of LAN cable.

 © SAMSUNG Electronics Co., Ltd.

3 WBS24 (Basic)

The WBS24(Basic) is the AP for using the 2.4GHz wireless LAN service.

Front Side

The front side of WBS24(Basic) is shown below.

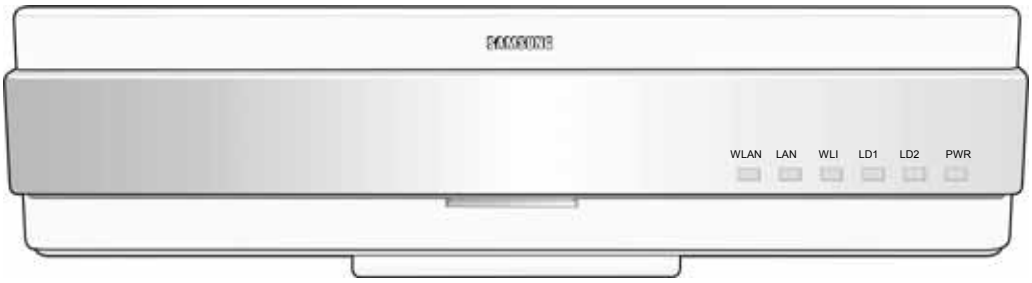

Figure 2.4 Front side of WBS24 (Basic)

LED

The LEDs are placed on the front side of WBS24(Basic) to show the status of WBS24(Basic) equipment. The LED states are described in the following table.

Table 2.4 LED states of WBS24 (Basic)

LED Name	Function	Blue LED On	Blue LED Off	Blue LED Blinking
WLAN	Wireless LAN is operating	Wireless LAN is normally operating	Wireless LAN is not operating	Data is transmitted/received through wireless LAN.
LAN	LAN is operating	LAN is normally operating	LAN is normally not operating	Data is transmitted/received through LAN.
WLI	Connected with 8WLI	Normally connected with 8WLI	Not connected with 8WLI	Data is transmitted/received through the 8WLI card and DASL line.
LD1	Indicating the B channel in use.	Refer to the Table 2.2		
LD2	Indicating the B channel in use.	Refer to the Table 2.2		
PWR	Power is on	Power is normally supplied.	Power is not normally supplied.	-

Back Side

The backside of WBS24(Basic) is as shown below.

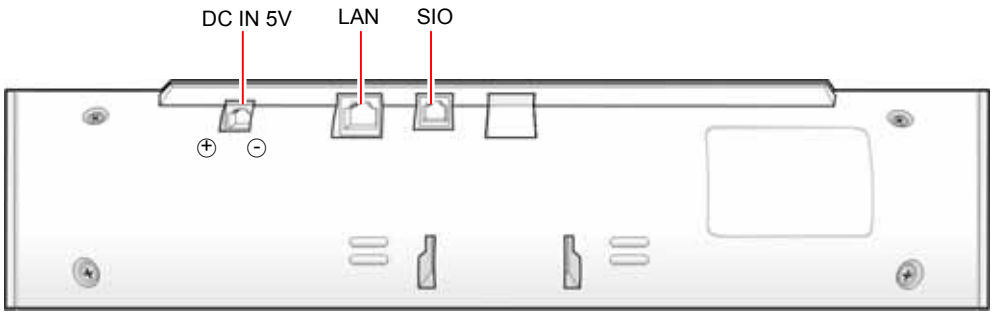

Figure 2.5 Back side of WBS24 (Basic)

Port

The ports on the back of WBS24(Basic) and their functions are described as follows :

Table 2.5 Functions of WBS24 (Basic) Ports

LED Name	Functions
DC 5 V	Used for local power supply. It is a spare part and not used usually.
LAN	Wired Ethernet port that connects the RJ-45 connector of LAN cable.
SIO	RS-232C type of connecting port used for monitoring the operational status of WBS24(Basic).

 © SAMSUNG Electronics Co., Ltd.

CHAPTER 3

Installation

This chapter describes the installation procedure for the wireless LAN device. This chapter describes procedures for mounting the 8WLI card to the OfficeServ 500 system, mounting the WBS24, setting the system DB for the wireless LAN service, registering the WIP mobile phone, and positioning the WBS24.

1 Installation Procedure

Installation and configuration procedures for the wireless LAN equipment of OfficeServ 500 System are as follows.

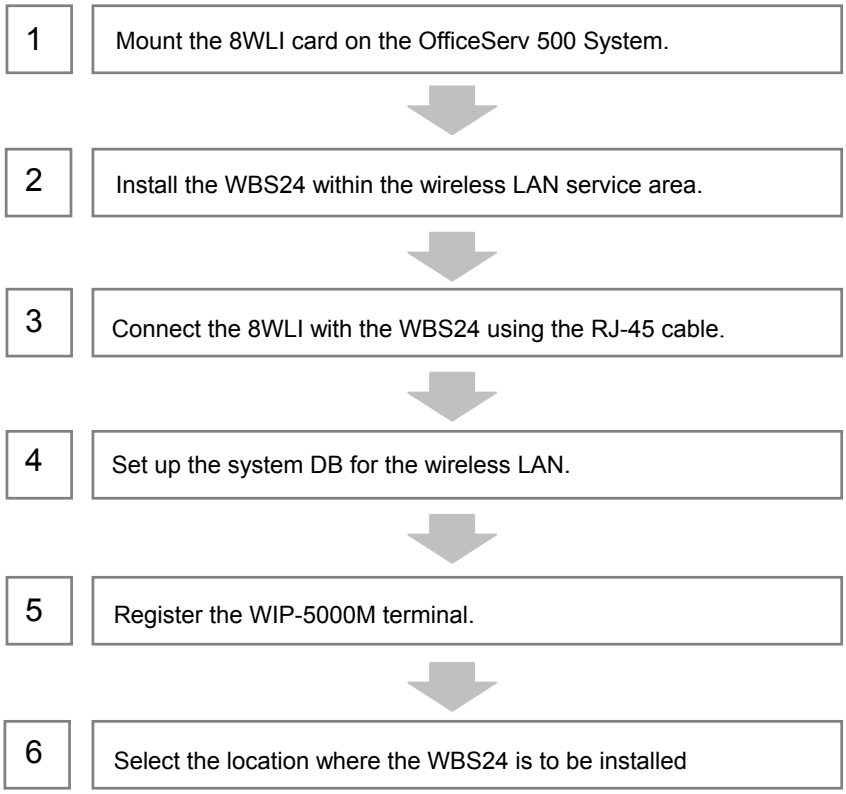

Figure 3.1 The Wireless LAN Installation Procedure

2 Mounting the 8WLI

Mount the 8WLI following the below instructions.

1) Prepare the 8WLI card.
2) Turn off the power of the OfficeServ 500 System and detach the front cover of the OfficeServ 500 System using a screwdriver.
3) Mount the 8WLI card between slot 1 and slot 3 inside the cabinet. There are guardrails attached at the top and bottom of the slot to fasten the 8WLI card. Using these guardrails, carefully push the card into the system.

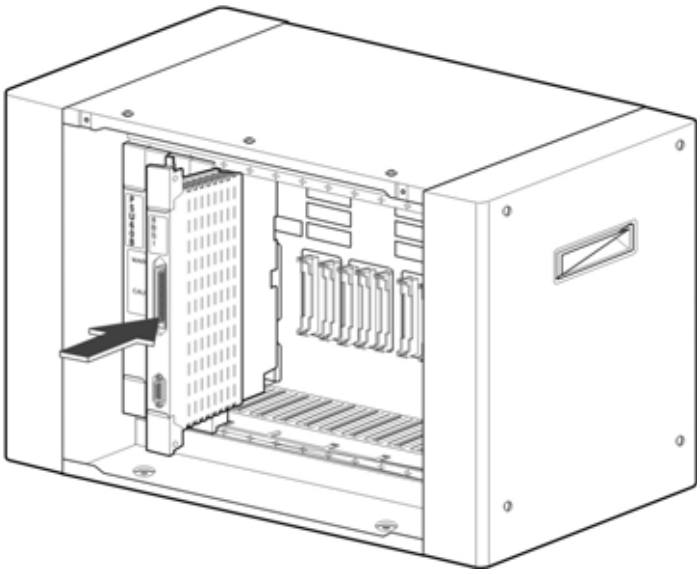

Figure 3.2 Mounting the 8WLI Card (1)

4) Firmly press the center of the card's front panel to fully insert the 8WLI card into the main board connector.
5) Once the 8WLI card is fully inserted into the main board connector, lower the levers at the top and bottom of the slot inwards to fasten the card.

 © SAMSUNG Electronics Co., Ltd.

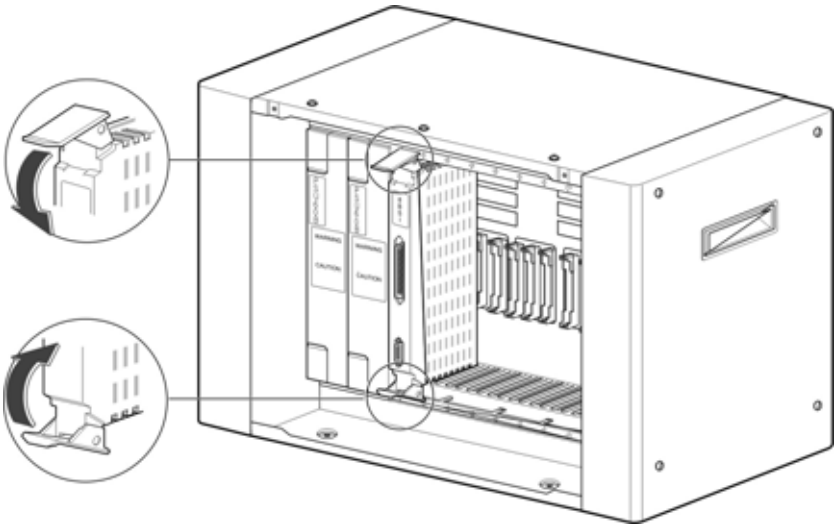

Figure 3.3 Mounting the 8WLI Card (2)

Cautions against mounting the 8WLI card

The 8WL card can be installed in the OfficeServ 500 System. Do not use this card on other systems.

3 Mounting the WBS24

The WBS24 is classified into wall WBS24 and desk WBS24 depending on installation types. This section describes how to install a wall WBS24 or desk WBS24.

3.1 Wall Type of WBS24

A WBS24 can be installed on the wall to offer the wireless LAN service as described below :

Required Tools

Prepare the following tools in advance when mounting the WBS24 on a concrete wall.

- Electric drill, hammer
- Wall bracket
- Cross-tip screwdriver(6.5 mm)
- Two plastic anchors
- Two cross-tip screws
- WBS24

Mounting Instruction

1) Attach the <screw position diagram>, which comes with the WBS24, on the wall where the WBS24 is to be mounted.

NOTE

The screw position diagram

If the <screw position diagram> is not available, press an A4 paper sheet against the bottom surface of the WBS24, and mark the two positions of the screw hole.

 © SAMSUNG Electronics Co., Ltd.

2) Drill a hole at the ‘screw position’ illustrated in the <screw position diagram>. The hole shall be at least 35mm deep and 5.5mm wide, which will enable the plastic anchor to enter the hole easily.

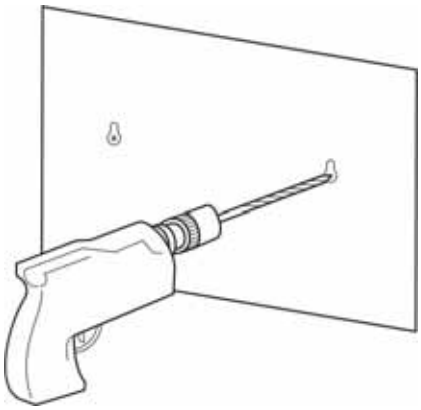

Figure 3.4 Mounting the WBS24 on a Concrete Wall-Drilling a Hole

3) Detach the <screw position diagram> after drilling the hole.

4) Insert the plastic anchor into the hole using a hammer.

Figure 3.5 Mounting the WBS24 on a Concrete Wall-Inserting the Plastic Anchor

5) Insert a screw into the plastic anchor and tighten the screw with a cross-tip screwdriver. Do not fully tighten the screw, but leave a gap of 5mm.

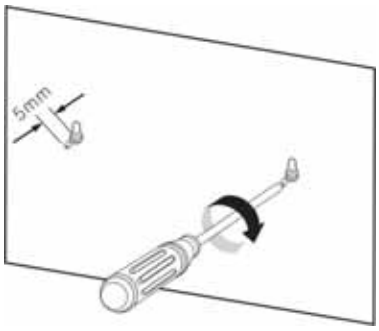

Figure 3.6 Mounting the WBS24 on a Concrete Wall-Tightening the Screw

6) Two screw holes exist in the prop of the WBS24 system. Insert the screws on the wall into the screw holes. Pull the prop downward.

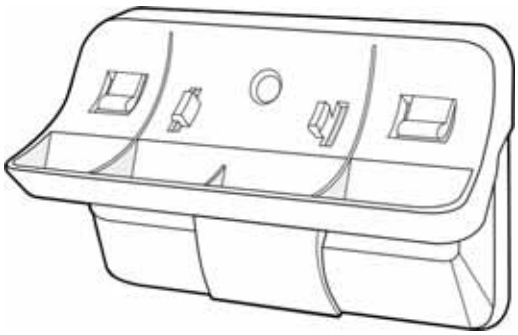

Figure 3.7 Mounting the WBS24 on a Concrete Wall

7) Two holes exist at the bottom surface of the WBS24 system. The holes can be attached to the prop of the WBS24 system. Fit the WBS24 system with its prop.

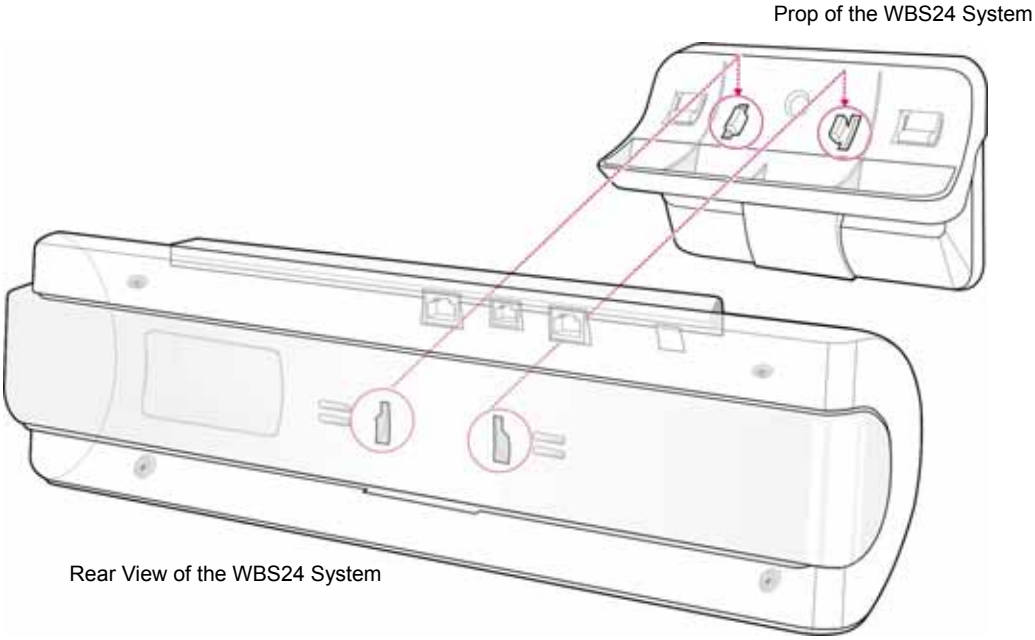

Figure 3.8 Mounting the WBS24 on a concrete wall-Attach the WBS24 to its Prop

 © SAMSUNG Electronics Co., Ltd.

3.2 Desk Type of WBS24

The WBS24 can be installed on a desk by attaching its prop to the desk to offer the wireless LAN service.

Two holes exist at the bottom surface of the WBS24 system.. The holes can be attached to the prop of the WBS24 system. Fit the WBS24 system with its prop as shown below : Put the WBS24 system on the desk carefully while preventing the system from being shaken or falling down.

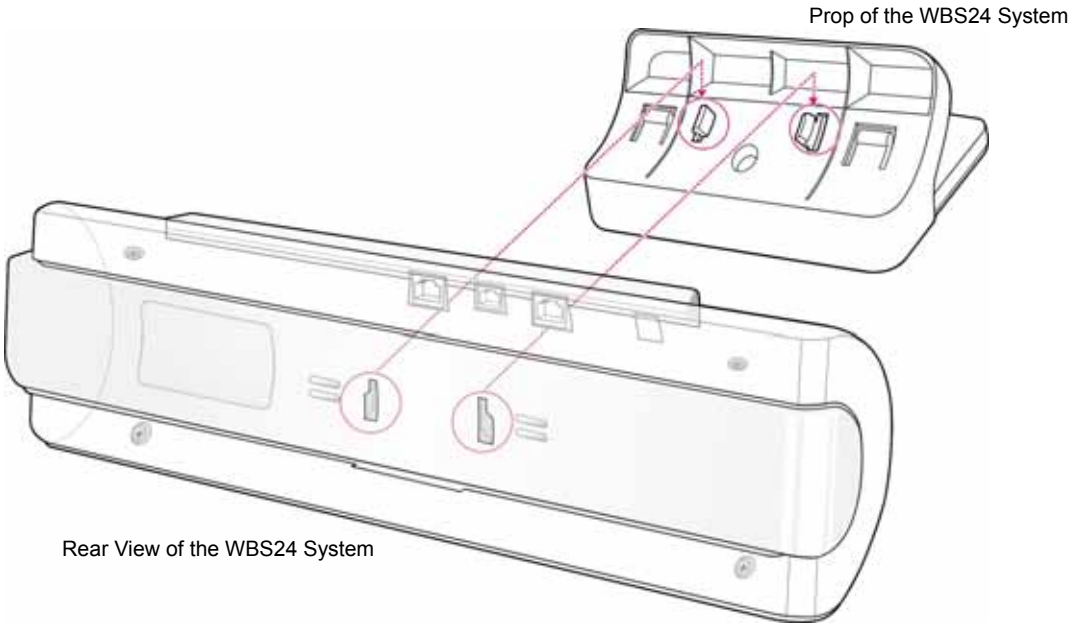

Figure 3.9 Installing a Desk WBS24

> **Cautions against installing the desk WBS24**
>
> When putting the WBS24 on the desk, do not install the WBS24 at an unstable location or on a smaller prop than the WBS24 system.

4 Connecting the 8WLI with the WBS24

When the cable with two twisted-pairs connecting the 8WLI and the WBS24 has the common characteristics, the OfficeServ 500 System's wireless LAN offers good performance.
Even when one of the two cable pairs is disconnected, the power will be supplied normally, since the WBS24 uses the phantom feeding method for power supply.
This section describes the procedure for connecting the 8WLI, which is mounted on the OfficeServ 500 System, with the WBS24, which is installed on a wall.

Preparing the Cable

Prepare a RJ-45 cable or two twisted-pair(4 wires) cables of the below specifications.

Figure 3.10 RJ-45 cable

Table 3.1 Twisted Pair cable specifications

Item	Cable Specifications
Diameter	0.6 mm or 0.4 mm
Length	0.6mm in diameter and 600M or less in length, or 0.4 mm in diameter and 400 M or less in length.
Interface	2×U interface & 64 Kbit/sec via 4 B-channels

 © SAMSUNG Electronics Co., Ltd.

Connecting the Cable

Connect the twisted-pair cable following the below instructions.

As shown below, connect the Champ connector of the twisted-pair cable to the 8WLI's Champ connector, and connect the RJ45 connector to the WBS24's WLI port.

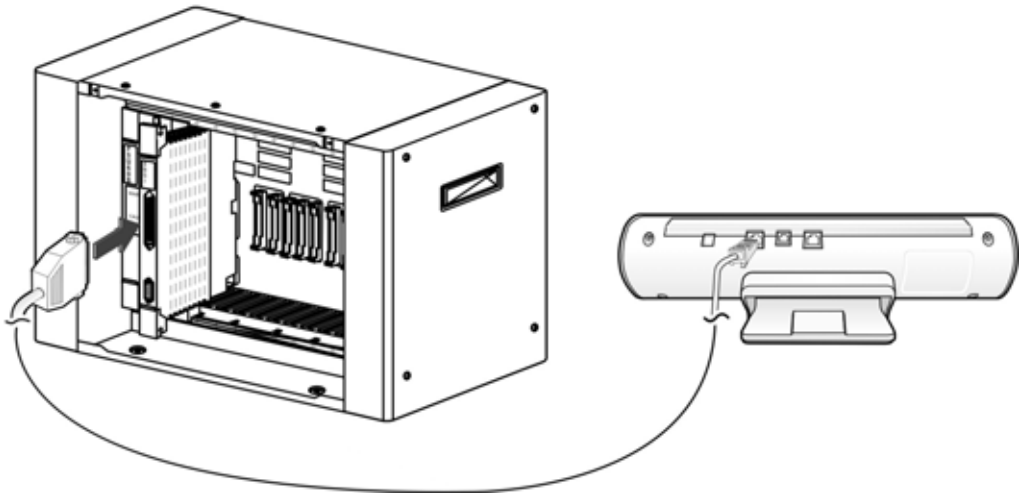

Figure 3.11 Connecting the WBS24 with the 8WLI card

5 Setting the System DB

Before using the WIP-5000M terminal on the OfficeServ 500 System, appropriate values for the following items must be set in accordance with the operating environment, using the MMC program.

5.1 Setting the System KEY

System KEY is used internally in the system. System ID KEY is an authentication parameter used in the user identification procedure when registering a WIP500M mobile phone to the wireless LAN system. The default value '00000' must be modified to another value(at most 5 characters long) using the MMC 845 program, to activate the wireless LAN.

5.2 Setting the System ID

All terminals used in the wireless LAN shall have the System ID set for access. Scanning of this value is always possible at a general terminal, and this value can be modified to random characters for system identification when managing the system. The default value 'WBS24' can be modified to another value(at most 6 characters long) using the MMC 845 program.

5.3 Setting the WBS24

The wireless LAN Access Point, or the WBS24, must be activated to employ the wireless LAN. For voice service only, enter the SECOND WBS IP of the MMC845, and use the default values of the WBS24.
However, to offer a wireless data service, the IP Address, Netmask, Gateway, and DNS, which are effective in the Intranet or Internet network, must be set at the Network Configuration DB for the WBS24
The default value may be modified to an environment with less interference by verifying the interference between cells for each WBS24.

Caution when setting the WBS24 Second IP

To use the Internet network, the first three digits of the IP assigned to the WBS24 and the first three digits of the Second WBS24 IP of the WBS24 must be identical. If the IP assigned to the WBS24 and the Station is 168.219.149.xxx, then the Second IP of the WBS24 shall be 168.xxx.xxx.xxx.

 © SAMSUNG Electronics Co., Ltd.

5.4 Assigning a terminal IP

Before registering a WIP500M terminal, an effective IP address shall be assigned to the WIP-5000M terminal using the MMC 848 program. This IP address shall be assigned for each terminal.
Although this IP address may not be relevant when not using the data service, assign an effective IP address for later use of both voice and data services.

5.5 Authorizing the Terminal Register

A wireless LAN terminal shall be registered at the system DB in order to be used for the OfficeServ 500 System. After authorizing the terminal register through the MMC 849 program, register the terminal following the registration procedure. The password used for entering the register authorization menu can be changed through the MMC 849 program, along with the previous password used for the OfficeServ 500 In addition, the WEP(Wired Equivalent Privacy), an encryption method for the wireless LAN, is used to maintain data confidentiality in the wireless environment. Execute the MMC 849 program for authorizing a terminal register in order to register a terminal to the system. Once the terminal registration is complete, cancel the register authorization to restrict the registration of other terminals.

NOTE

MMC Programming

Refer to ‘Chapter 5 MMC Programming’ of this Description for programming procedures related to the wireless LAN.

6 Registering/Clearing the WIP-5000M Terminal

The WIP500M terminal must be registered to the system to be used in the OfficeServ 500 System Wireless LAN. This section introduces the procedures for registering and clearing the register of a terminal.

6.1 Registering a WIP-5000M

Register a WIP-5000M terminal following the instructions below.

1) Confirm if the system DB items are set according to the 'Setting the System DB' section of this chapter.

2) Register the WIP-5000M terminal at the register menu.
Refer to the 'WIP-5000M User Manual' for the register procedure.

3) The Network ID shall be entered correctly during the WIP-5000M register procedure. Especially, the User ID and Password shall be identical to that of the system. If an error occurs during execution of register procedure, check the system DB settings and repeat the procedure above.

4) An extension number will be assigned to the WIP-5000M upon completion of the terminal register.

6.2 Clearing a WIP-5000M

Where theft or breakage of a WIP500M Station causes a new terminal to be registered, registration of the previous terminal shall be deleted.
The clearing procedure for the WIP-5000M is described below.

Clearing from the System

To clear the WIP500M in use, which is within the wireless LAN service area, set the normal mode through the system MMC.
If the terminal is not within the service area or is not in use, delete the terminal's registration DB in the system using the forced mode through the MMC system.

Clearing from the WIP-5000M

The terminal's registration DB may be deleted from the WIP500M within the wireless LAN service area. Refer to the 'WIP500M User Manual' for termination procedure in detail.

 © SAMSUNG Electronics Co., Ltd.

7 Positioning the WBS24

This section introduces the cell in where the WBS24 will be installed, and describes the data transmission rate affected by the terminal's location.

7.1 Cell Overview

The Figure 3.10 below illustrates the wireless transmission range of the WBS24. Theoretically, the range of a cell is presented as a circle, but in reality, the shape may be altered depending on the surrounding environment such as the location of the WBS24 or the surrounding structures.
The boundary of a cell normally indicates the frequency range of WBS24, but actually, it should be perceived as a wireless service range and a boundary where a hand-off function to another cell is possible.
The WIP-5000M is always connected to WBS24 within the cell range, and even when the WIP500M is in an overlapped range between cells, the WIP500M maintains communication with one cell at a particular time.

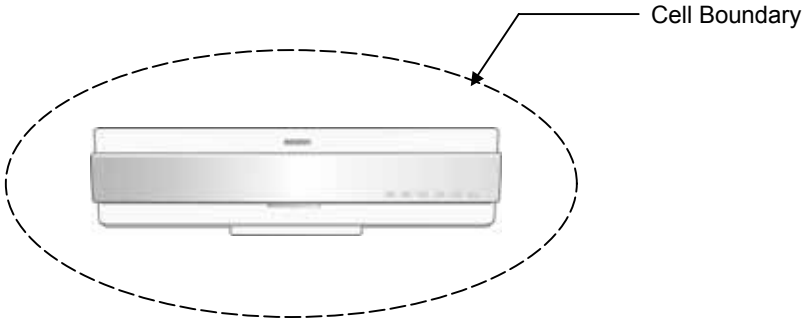

Figure 3.12 The Cell Boundary of WBS24

Single Cell

Generally, only one cell is configured for environments such as the wireless home terminal. Single cells are independent service areas, thus the cells do not affect one another.
Configuration of single cells is illustrated in the Figure 3.11 below.

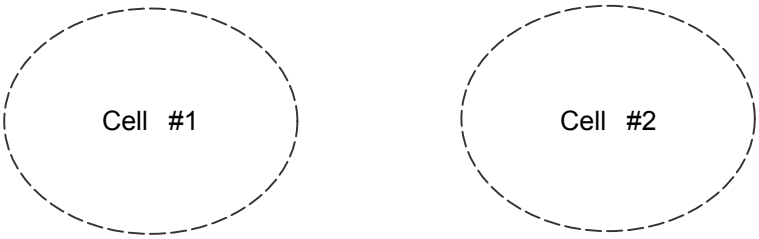

Figure 3.13 Single Cell Configuration

Multiple Cell

The multiple cell type is an environment where more than two cells are overlapped, and where the service for the terminal in use can be maintained while the Station travels between single cells.
The actual configuration may differ from the figure below since the service areas of cells are altered depending on the positioning of the WBS24.

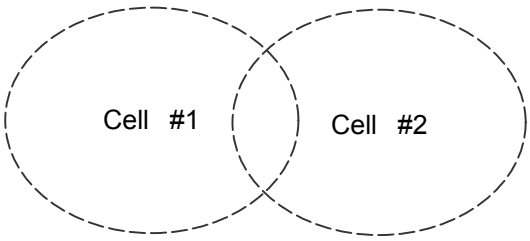

Figure 3.14 Multiple Cell Configuration

Handover

In order to provide a continuous service, the system must perform switch conversions when terminals are traveling between different cells.
Especially in voice calls, the system must perform T-Switch conversions at appropriate times in order to maintain the call signal.

Location Register

By registering the current location of the terminal in a multiple cell environment, the system can easily transmit information to the terminal. Thus, the terminal shall register its location at the system in case it travels between different cells.

 © SAMSUNG Electronics Co., Ltd.

7.2 Data Transmission Rate on Terminal Location

Data transmission rate and call quality are subject to the terminal's location in an office. Refer to Figure 3.13 and Table 3.2 below.

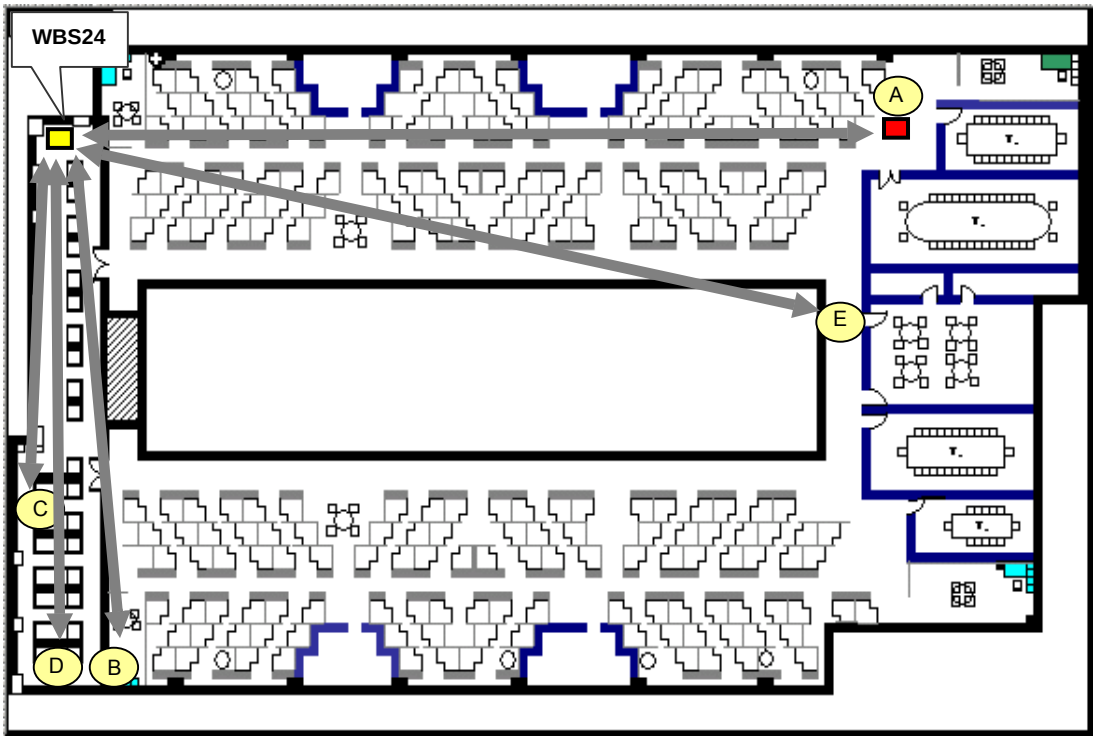

Figure 3.15 Data transmission rate on Station location

Table 3.2 Data transmission rate on Station location

No.	Station location	Tx(Mbps)	Rx(Mbps)	Note
1	WBS24↔Station (close distance:20CM)	3.97	3.04	
2	Test location 'A'	3.52	3.05	
3	Test location 'B'	3.97	3.04	
4	Test location 'C', 'D', 'E'	Link Fail	Link Fail	Location 'C' and 'D' have shields blocking the signal.

NOTE

Data Rate

Tx is the rate of data transmitted from the WBS24 to the Station.

Rx may have different test results depending on the performance of the network card mounted on the Station.

This page is intentionally left blank.

© SAMSUNG Electronics Co., Ltd.

CHAPTER 4

MMC Programming

This chapter describes the MMC programming procedures related to the wireless LAN function.

> NOTE
>
> **Method of MMC programming**
>
> Only the MMC programming procedures related to the wireless LAN are introduced in this chapter. Refer to the 'OfficeServ 500 Programming Description' for the overall system MMC programming procedures.

1 Before Programming

This section introduces the basic concepts, the phone buttons used for programming, and the cautions before starting the programming procedure.

1.1 Programming Overview

The OfficeServ 500 System settings can be easily modified using a connected digital phone, and the program used to change the system settings through a phone is called the MMC(Man Machine Communication). The program used for system setting through a connected laptop computer or a PC is called the PCMMC. The MMC programs are classified into a program that the subscriber can program and a program that the subscriber cannot program, depending on the three subscriber levels : Engineer, Operator, and Subscriber. The Engineer and Operator programming requires a password for each programming, but the Subscriber programming does not need a password.

1.2 Programming Button

The functions of the phone buttons for MMC programming are listed below.

Table 4.1 Program buttons

Button	Function
▲ ▼(Up & Down)	Change screen
Dial key	Confirm status
Soft key	Move cursor
Keypad	Select item
SPK key	Save data and proceed to next menu
HOLD key	Delete previous input
TRSF key	Enter program

1.3 Cautions when Programming

- Programming shall be done in an idle mode where the handset is on top of the telephone set.
- Programming may be done on any extension of a digital phone.
- Programming may not be done on a common single line telephone.
- For digital phones not equipped with the LCD screen, use the dial key to enter the numbers in the Description instead of the [▲volume▼] button. But since there are no Soft buttons, programming is limited. Therefore, with phones without the LCD screen, program only the Subscriber programs.
- When ‘INVALID DATA’ appears on the LCD screen, re-enter the correct data.
- When no key is pressed for an amount of time(key program end time, default is 60 seconds), programming will end and return to idle mode.
- When the handset is lifted during programming, programming will end and return to idle mode.
- When programming returns to idle mode by pressing the [SPK] key or the [TRSF] key, or by lifting the handset, without confirming the modified data(pressing the ‘left’ or ‘right’ key of the ‘Soft’ button), or when the phone plug is disconnected, the data entered until then and the data on the LCD screen will automatically be saved as the new data.

 © SAMSUNG Electronics Co., Ltd.

1.4 Programming Procedure

This section describes the overall programming procedure. The procedure shall be read carefully and thoroughly understood.
The programming procedure is described as follows.

Program Procedure	Display Screen
1) Press the [TRSF] button, and enter 800.	PROGRAMMING MODE ENTER PGM ID:
2) Enter the PASSCODE (Operator or Engineer password).	ENABLE TECH PROG PASSCODE:****
3) To enter the MMC, press the dial button [1] or select the 'ENABLE' status by pressing the [UP & DOWN] button.	ENABLE TECH PROG DISABLE TENANT:1

4) Enter the program number.
Or, select the program number using the [UP & DOWN] button, and press [SPK].
Or, in an idle mode, press the [TRSF] button and enter the program number.
5) Proceed programming of the selected program.

2 Programming

This section describes the MMC programming procedure related to the parameter modification of the 8WLI and the WBS24.
The MMC related to the parameter modification of the 8WLI and the WBS24 are listed below.

Table 4.2 Wireless LAN related MMC

MMC No.	MMC Function
845	Sets 8WLI, WBS24 parameter
846	WIP INFO
847	8WLI RESET/STATUS
848	Setting for the WIP Data terminals
849	8WLI Registration/Release, Encryption Settings

2.1 Setting the MMC845 8WLI Parameter

This MMC modifies the 8WLI parameter.
Set the network configuration with the 8WLI parameters, which are the SYSTEM ID, the System KEY, and the WBS24.
The system KEY is used internally to distinguish between systems when registering a terminal. The default value is ‘00000’, but only when this value is modified to another value, an electric power will be supplied to the WBS24, thus enabling the use of the WLAN terminal, In addition, the System KEY serves as an identification ID when the WLAN terminal connects to the WBS24.
The default value of the SYSTEM ID, ‘WBS24’, must be modified to another value in order to use a multiple system in one area. The DNS setting for WLAN is additionally described in this menu.
Set the network configuration for eight WBS24s by setting the IP assignment, Netmask, and Gateway for each WBS24. These settings should be compatible with the Intranet since the network configuration setting is essential for data service. In addition, the RF frequency for each WBS24 should be selected. Currently in Korea, up to 14 frequencies may be selected.

The number of the WBS24 indicates the ID of the BTS for the WBS24. 1 to 24 are assigned to the WBS24(Combo), and higher numbers than 24 are assigned to the WBS24(Basic).
The WBS24(Combo) is connected to three WLIs. WBS24(Combo) 1 to 8 are assigned to WLI 1 and WBS24(Combo) 9 to 16 are assigned to WLI 2.
Also, WBS24(Combo) 17 to 24 are assigned to WLI 3.

Session Initiation Protocol(SIP) variables used for the WBS24(Basic) can be defined.

 © SAMSUNG Electronics Co., Ltd.

Defaults

```
WLI  : SYSTEM ID       → WBS24
WLI  : SYSTEM KEY      → 0000
WLI  : 2 ND DNS        → 0.  0.  0.  0
WLI  : 1ST DNS         → 0.  0.  0.  0
WLI  : SYSTEM KEY      → 34568
WLI  : 2 ND WBS IP     → 168.208.144.10
WLI  : CODEC LIST      → G726
WLI  : VERSION

WBS001  : IP ADDR      → 0.  0.  0.  0
WBS001  : RF CH.       → 1

WBS001  : STATUS       → OFF
WBS001  : VERSION
WBS001  : MAC ADDR     → FFFF FFFF FFFF
WBS001  : NET MASK     → 255.255.255.  0
WBS001  : GATEWAY      → 0.  0.  0.  0

SIP  : RETRANS T1      → 000500MS
SIP  : RETRANS T2      → 0004000MS
SIP  : RETRANS T4      → 0005000 ms
SIP  : GEN LINGER T    → 000000MS
SIP  : INV LINGER T    → 32000MS
SIP  : STOP GENNR T    → 000000MS
SIP  : STOP INVNR T    → 000000MS
SIP  : GEN REQ T       → 000000MS
SIP  : PROVIS TIME     → 180000MS
```

Program procedure	Display Screen
1) Press the [TRSF] button, and enter 845.	WLI : SYSTEM ID 0000 845: WLI PARA SELECT PROG ID
2) Press the [SPK] key to enter the select menu. When the cursor is at WLI, press the [UP & DOWN] button and select WLI or WBS1~254.	WLI : SYSTEM ID WBS24
3) Press the Soft key and move to the SYSTEM ID. When the cursor is below SYSTEM ID, press the [UP & DOWN] key and select the setting menu for WLI or WBS24.	WBS1: IP ADDRESS 0. 0. 0. 0 WLI : SYSTEM ID WBS24
4) Set the items below at the WLI menu.	
• SYSTEM ID : Use the Soft key to move the cursor. Enter the new WLI SYSTEM ID to register. • Press the Soft key and proceed to next register status.	WLI : SYSTEM ID WBS24
• Register the DNS server(second) IP.	WLI : 2 ND DNS IP 0. 0. 0. 0
• Register the DNS server(first) IP.	WLI : 1 ST DNS IP 0. 0. 0. 0
• Register the SYSTEM KEY.	WLI : SYSTEM KEY 00000

Register the WBS24 second IP.
This is shared between all eight WBS24s.

Caution when setting the WBS24 SECOND IP

To use the Internet network, the first three digits of the IP assigned to the WBS24 and the first three digits of the SECOND WBS IP of the WBS24 must be identical. If the IP assigned to the WBS24 and the Station is 168.219.149.xxx, then the SECOND WBS IP of the WBS24 shall be 168.xxx.xxx.xxx.

© SAMSUNG Electronics Co., Ltd.

- Select the voice codec.
  Select from the four, G711u, G711, G726, and G729 CODEC.
  Numbers are given from 1 to 4 based on priority.

```
WLI : CODEC LIST
CODEC 1: G726
```

5) Set the items below at the WBS24 menu.

- Register the WBS24 IP ADDRESS.

```
WBS001 : IP ADDR
0.  0.  0.  0
```

- Register the WBS24 RF CHANNEL.

```
WBS001: RF CH.
1
```

- Displays the WBS24 status.

```
WBS001:STATUS
OFF
```

- Displays the WBS24 VERSION.

```
WBS001:VERSION
```

- Displays the WBS24 MAC ADDRESS.

```
WBS001: MAC ADDR
0000 0000 0000
```

- Register the WBS24 NET MASK.

```
WBS001: NET MASK
255.255.255.  0
```

- Register the WBS24 GATEWAY.

```
WBS001: GATEWAY
0.  0.  0.  0
```

6) Set the items below at the menu .

- Register the RETRANS T1.
  The initial re-transmission time if no answer based on the RFC2543 specification.
  The range is 0~9900ms. Default is 500 ms.

```
SIP : RETRANS T1
000500MS
```

- Register the RETRANS T2.
  The maximum re-transmission time if no answer based on the RFC2543 specification.
  The range is 0~9900ms. Default is 4000ms.

```
SIP : RETRANS T2
004000MS
```

- Register the RETRANS T4.
  The time the User Agent Server waits after receiving the ACK message.
  Based on the RFC2543 specification.
  The range is 0~9900ms. Default is 5000 ms.

```
SIP : RETRANS T4
004000MS
```

- Register the GEN LINGER T.
  The server shall retransmit the response during this amount of time until the requested retransmission is received.
  For example, the wait time after sending 200 OK for INFO. The range is 0~99900ms. Default is 5000 ms.

```
SIP : GEN LINGER T
000000MS
```

- Register the INV LINGER T.
  After the client sends ACK for the INVITE Final Response, the client cannot confirm if the server received the ACK message.
  The client waits for this amount of time after sending ACK for the Final Response.
  The range is 0~99900ms. Default is 5000 ms

```
SIP : INV LINGER T
32000MS
```

- Register the STOP GENNR T.
  Before sending Cancel for General Request, the User Agent shall wait for this amount of time.
  The range is 0~99900ms. Default is 5000 ms.

```
SIP : STOP GENNR T
000500MS
```

 © SAMSUNG Electronics Co., Ltd.

- Register the STOP INVNR T.
  Before sending Cancel for the Invite Request,
  the User Agent shall wait for this amount of time.
  The range is 0~99900 ms. Default is 5000 ms.

```
SIP : STOP INVNR T
000000MS
```

- Register the GEN REQ T.
  After sending General Request,
  he User Agent shall wait for the Final Response
  for this amount of time. The range is 0~99900ms.
  Default is 5000 ms.

```
SIP : GEN REQ T
000000MS
```

- Register the PROVIS TIME.
  After receiving the Provision Response,
  the User Agent shall wait for this amount of time
  until Timeout ends. The range is 0~999900ms.
  Default is 180000ms

```
SIP : PROVIS TIME
180000MS
```

Related Programs

MMC 846	WIP INFO(Station information)
MMC 847	WLI RESET (WLI/WBS24 status information and initialization.)
MMC 848	WLI IP LIST(Station IP register)

2.2 Setting the MMC846 WIP Information

This MMC sets up the WIP-5000M wireless terminal's information.

Defaults

[8601] REGIETERED	→NO
[8601] PASSWORD	→0000
[8601] USER ID	→1212
[8601] MAC ADDR	→
[8601] IP ADDRESS	→
[8601] IP OFFSET	→
[8601] WBS NUMBER	→
[8601] WLI NUMBER	→
[8601] PHONE TYPE	→
[8601] LOCATED	→NO

Program Procedure	Display Screen
1) Press the [TRSF] button, and enter 846.	846: WIP INFO SELECT PROG ID
2) Press the [SPK] key to enter the select menu. When the cursor is at the phone number, press the [UP & DOWN] button and select the current phonenumber information. Press the Soft key and move to the information menu of each information menu, and select the setting menu.	[8601] REGIETERED NO
3) Confirm the status of terminal register for each phone number.	[8601] REGIETERED NO
4) Register the PASSWORD of terminal.	[8601] PASSWORD 0000
5) Register the USER ID of terminal.	[8601] USER ID 1212
6) Displays the MAC ADDRESS of the registered terminal.	[8601] MAC ADDR
7) Displays the IP ADDRESS of the registered terminal.	[8601] IP ADDRESS
8) Displays the IP OFFSET of the registered terminal.	[8601] IP OFFSET
9) Displays the WBS NUMBER of the registered terminal.	[8601] WBS NUMBER
10) Displays the WLI NUMBER of the registered terminal.	[8601] WLI NUMBER
11) Displays the PHONE TYPE of the registered terminal.	[8601] PHONE TYPE
12) Displays the location of the registered terminal.	[8601] LOCATED NO

© SAMSUNG Electronics Co., Ltd.

Related Programs

MMC 847	WLI RESET
MMC 848	WLI IP LIST
MMC 849	WLI REGIST

2.3 Resetting the MMC847 WIP

This MMC is used for rebooting the 8WLI or the WBS24, by software or independently. This MMC is also used for initializing the WBS24 or verifying the current connection status of the WBS24.

Program Procedure	Display Screen
1) Press the [TRSF] button, and enter 847.	847: WLI RESET SELECT PROG ID
2) Press the [SPK] key and enter the select menu. Press the Soft key and confirm initialization of WLI.	
3) Press the Soft key, or press [1] to select YES, and the WLI will be initialized.	RESTART WLI : 1 RESET NOW ? NO
4) Press the Soft key, or press [1] to select YES, and the WBS24 will be initialized.	RESTART WBS : 001 RESET NOW ? NO
5) Displays current connection status of the WBS24.	WBS STATUS : 001 N N N N N N N N

Related Programs

MMC 846	WIP INFO
MMC 848	WLI IP LIST
MMC 849	WLI REGIST

2.4 Setting the MMC848 WIP Lists

This MMC848 is used when viewing the IP list assigned to 8WLI, or when creating a new IP list. Up to 100 IP lists may be entered. MMC848 command is used for setting the MAC address of data terminals to use wireless LAN.

Program Procedure	Display Screen
1) Press the [TRSF] button, and enter 848..	848: WLI LISTS SELECT PROG ID
2) Press the [SPK] key and enter the select menu. Press the Soft key to change the IP ADDRESS while assigning the IP ADDRESS.	IP:001 USED 0.0.0.0
3) Use the Soft key to position the cursor at an IP ADDRESS, and assign the IP ADDRESS by entering values of 0~255.	IP:001 USED 168.0.0.0
4) Numbers next to USED indicates the terminal number from which the IP ADDRESS was assigned.	IP:001 USED 8601 168.219.149.5

Related Programs

MMC 846	WIP INFO
MMC 847	WLI RESET
MMC 849	WLI REGIST

2.5 Setting the MMC849 WLI REGIST

This MMC is used to enable or disable the register of a WIP500M mobile phone within the WLAN. This MMC is also used to approve the WEP(Wired Equivalent Privacy) enabling function where the WLAN is encrypted. The WEP key, which must be used when WEP is enabled, can be configured with 16 characters or less.
Also, the MMC is used to set MAC addresses in the data terminal in order to use the wireless LAN.

 © SAMSUNG Electronics Co., Ltd.

Program Procedure	Display Screen
1) Press the [TRSF] button, and press 849.	849: WLI REGIST SELECT PROG ID
2) Press the [SPK] key to enter the select menu. Enter the PASSCODE to activate the register.	ENTER PASSCODE ****
3) Select ENABLE to register the terminal to the REGISTER WLI.	WLI REGISTRATION ENABLE
4) Select the WEP KEY setting when ENCRYPTION is selected.	WBS WEP SERVICE DISABLE
5) Enter WEP KEY values when the WEP KEY is set.	WEP KEY
6) Can clear the register status for each terminal also.	WIP REGIST CLEAR 8601:FORCED
7) Press the soft key in the IP to change or allocate a MAC address.	MAC LIST : 01 FFFFFFFFFFFF

Related Programs

MMC 846	WIP INFO
MMC 847	WLI RESET
MMC 848	WLI IP LIST

2.6 Setting the MMC830 Ethernet Parameters

To use the basic type of the WBS24, the system network and MGI should be set. This MMC provides a mean to configure the Internet Protocol(IP) addressing of the OfficeServ 500 system MCP2 card. This MMC must be utilized if there are ITP series phones and/or MGI cards used on the system.

Table 4.3 MMC830 Parameters

Number	Parameters	Description
00	SYSTEM IP ADDR	Specifies the IP address for the MCP2 card.
01	SYSTEM GATEWAY	Specifies the designated gateway IP address used for contacting IP devices beyond the local network subnet.
02	SYSTEM NET MASK	Specifies the IP subnet mask. This parameter is used by the system to calculate the range of IP devices(subnet) that are within 'direct reach' of the MCP2(without having to go through the designated network IP gateway).
03	SYSTEM RESET	Prompt to restart system MCP2 when system IP address is changed. This reset is same to FAST RESTART on MMC 811.
04	SYSTEM IP TYPE	Defines which IP addressing relationship is used for communications to and from the MCP2 card. 0 PRIVATE IP ONLY : The system assumes all IP phones and VoIP connections are on the same network. And all IP addresses are private IP address. 1 PRIVATE w PUBLIC : The system knows that there is a mixture of IP phones and VoIP connections on the same network and on remote network(s), thus communicates accordingly based upon the entries in MMC 840(for IP phones), MMC 838(for other VoIP gateways) or MMC 830(for other MCP2). 2 PRIVATE IP ONLY : The system assumes all IP phones and VoIP connections are on the same network. And all IP addresses are public IP address.
05	SYSTEM PUBLIC IP	The MCP2 will originate communications, to IP phones and VoIP connections outside the local network, using this IP address. Communications to/from this IP will require involvement of the MGI card. The system identifies communications to/from this address as 'public'. This allows devices, on remote networks/subnets, to establish communications with the system, without exposing your LAN. See 'SYSTEM IP TYPE'.
06	SYSTEM MAC ADDR	For your reference, and cannot be changed. The unique hardware(MAC) address of the MCP2 card.
07	PCMMC ADDRESS	When system wants connect to PCMMC, system will be send to this IP address for connection message. Reserved for future use.

 © SAMSUNG Electronics Co., Ltd.

Number	Parameters	Description
08	REMOTE M/A ADDR	When system wants connect to remote M & A PC, system will be send to this IP address for connection message. Reserved for future use.

NOTE

Changing IP address/value

When changing any IP address/value, listed below, three digits must be input for each(octet) field.

Example) 192.168.1.10 input must be : 192 168 001 010

NOTE

The first 3 parameters

SYSTEM IP address, system gateway, and system net mask are stored separate from the main system database, thus will not be defaulted when MMC811 'CLEAR MEMORY' is performed. Furthermore, any changes to these parameters will not be applied until the MCP2 is reset.

Program Buttons

VOLUME	Used to scroll through options
KEYPAD	Used to enter selections
SOFT BUTTONS	Move cursor left and right
SPEAKER	Used to advance next MMC

Action	DISPLAY
1) Press Transfer button and enter 830 Display shows the system IP address.	SYSTEM IP ADDR 165.213. 97.185
2) Press Volume button to make selection and Press Right Soft button to move cursor.	SYSTEM IP ADDR 165.213. 97.185
3) Using the keypad enter three digit IP octet numbers IE 192 168 001 010 for 192.168.1.10 Cursor will return to Step 1 upon completion of IP address entry.	SYSTEM IP ADDR 192.168.001.010
4) Press Volume button to make selection and Press Right Soft button to move cursor.	SYSTEM GATEWAY 165.213. 97. 1

5) Using the keypad enter three digit IP octet numbers IE 192 168 001 001 for 192.168.1.1
Cursor will return to Step 5 upon completion of system gateway entry.

```
SYSTEM GATEWAY
192.168.001.001
```

6) Press Volume button to make selection and press Right Soft button to move cursor.

```
SYSTEM RESTART
ARE YOU SURE? NO
```

7) Press Volume button to make selection and press Right Soft button to store and move cursor.

```
SYSTEM RESTART
ARE YOU SURE? NO
```

8) Press Transfer button and enter to exit
OR
Press Speaker button to advance next MMC.

Default Data

SYSTEM IP ADDR : 165.213.97.185
SYSTEM GATEWAY : 165.213.97.1
SYSTEM NET MASK : 255.255.255.0
SYSTEM RESET : NO
SYSTEM IP TYPE : PRIVATE IP ONLY
SYSTEM PUBLIC IP : 1.1.1.1
SYSTEM MAC ADDR : CARD DEPENDANT
PCMMC ADDRESS : 168.219.1.101
REMOTE M/A ADDR : 168.219.1.102

Related Items

MMC 615 MGI GROUP
MMC 831 MGI PARAMETERS
MMC 833 VOIP ADDRESS TABLE
MMC 838 PRIVATE IP ADDRESSES
MMC 840 IP SET INFO
MMC 841 SYSTEM IP OPTIONS

 © SAMSUNG Electronics Co., Ltd.

2.7 Setting the MMC831 MGI Parameters

This MMC provides a mean to configure the Internet Protocol(IP) addressing of the MGI card(s). This MMC must be utilized MGI card(s) used on the system.

Table 4.4 MMC831 Parameters

Number	Parameters	Description
0	IP ADDRESS	Specifies the IP address for the MGI card.
1	GATEWAY	Specifies the designated IP gateway address used for contacting IP devices beyond the local subnet.
2	SUB MASK	Specifies the IP subnet mask. This parameter is used by the system to calculate the range if IP devices(subnet) that are within 'direct reach' of the MGI(without having to go through the designated network IP gateway).
3	PUBLIC IP	The MGI will originate communications, to IP phones and VoIP connections outside the local network, using this IP address. If this IP address sets 0.0.0.0, 255.255.255.255 or default value then this MGI card uses private IP only. See System IP Type on MMC 830.
4	STS PERIOD	No entry required. Designates the timed message cycle to check the remote IP status of MGI3 S/W.
5	VERSION	No entry required. Used to indicate revision of MGI3 S/W.
6	MAC ADDR	For your reference, and cannot be changed. The unique hardware(MAC) address of the MGI card.
7	CARD RESET	Prompt to restart MGI card when IP address is changed. This use for MGI 1 and 2 only, MGI3 is self restart automatically.

NOTE

A MGI card

This MMC cannot be accessed unless there is a MGI card installed in the system.

Program Buttons

VOLUME	Used to scroll through options
KEYPAD	Used to enter selections
SOFT BUTTONS	Move cursor left and right
SPEAKER	Used to advance next MMC

Action	DISPLAY
1) Press Transfer button and enter 831 Display shows the first MGI card	[3801] IP ADDRESS 168.219. 76.101
2) Enter MGI number OR Press Volume button to make selection and press Right Soft button to move cursor Press Volume button to make selection and press Right Soft button to move cursor.	[3801] IP ADDRESS 168.219. 76.101
3) Enter MGI parameter number OR Press Volume button to make selection and press Right Soft button to move cursor. Press Volume button to make selection and press Right Soft button to move cursor.	[3801] IP ADDRESS 168.219. 76.101
4) Enter MGI parameter OR Press Right Soft button to move cursor. Press Right Soft button to move cursor.	[3801] IP ADDRESS 165. 10. 1.100
5) Press Transfer button and enter to exit OR Press Speaker button to advance next MMC.	

Default Data

IP ADDRESS : 1.1.1.1
GATEWAY : 1.1.1.1
SUB MASK : 255.255.255.0
PUBLIC IP : 1.1.1.1
STS PERIOD : 00 SEC
VERSION : V4
CARD RESET : NO

Related Items

MMC 615 MGI GROUP
MMC 830 ETHERNET PARAMETERS
MMC 838 PRIVATE IP ADDRESSES
MMC 840 IP SET INFOMATION
MMC 841 SYSTEM IP OPTIONS

© SAMSUNG Electronics Co., Ltd.

CHAPTER 5

Maintenance

This chapter describes how to solve problems via a LED status of WBS24, how to verify the WBS24 using a web browser and how to upgrade the WBS24 software.

1 Verifying the Status of WBS24

1.1 Status inquiry via the LED Status Indicators

With the LED indicators on the front panel of the WBS24, it is possible to verify the WBS24 status. When power is supplied to the WBS24, booting is allowed about ten minutes later. At this time, booting is indicated as the LD2 LED blinks regularly.(At this time, other LEDs can be unintentionally turned on, but they should be ignored). After receiving the initialized data from the system and when booting is completed, the LD2 LED blink will be disappeared. From this time, the on-line service becomes practicable. After booting is completed, each LED indicator of on-line status contains the uses as shown below.

Table 5.1 WBS24 LED Status and Meaning of the WBS24

LED Name	Function	Blue On	Blue Off	Blue Blinking
PWR	Status of Power Supply	Normal power supply	No power supply	-
WLAN	Operating status of wireless LAN	Normal operation of wireless LAN	No operation of wireless LAN	Data being received and transmitted via wireless LAN
LAN	Operation status of LAN	Normal operation of LAN	No operation of LAN	Data being received and transmitted via LAN
WLI	Connection status with the 8WLI	Normally connected with the 8WLI card	Not connected with the 8WLI card	Data being received and transmitted via the 8WLI card and the DASL line
LD1	Indicating the B channel in use	Refer to the table below		
LD2	Indicating the B channel in use			

Table 5.2 Status of WBS24 LD1, LD2 LEDs

The number of B channels being communicated	LED status of the LD1	LED status of the LD2
0	Blue LED Off	Blue LED Off
One	Blue LED Blinking Periodically	Blue LED Off
Two	Blue LED Off	Blue LED Off
Three	Blue LED Off	Blue LED Blinking Periodically
Four	Blue LED Off	Blue LED Off

1.1.1 Booting Failure

When the WBS24 fails to boot up, it means that the flash memory with the program is not functioning. All of the 5 LEDs, except the PWR, blink periodically at the same time to inform the fault status. The flash memory might be broken when the process of the WBS24 upgrade is interrupted, and the fault status can be removed using ‘the upgrade using the network booting’ method.

 © SAMSUNG Electronics Co., Ltd.

1.1.2 Troubleshooting

The troubleshooting steps according to the LED status of WBS24 are explained in the following flowchart.

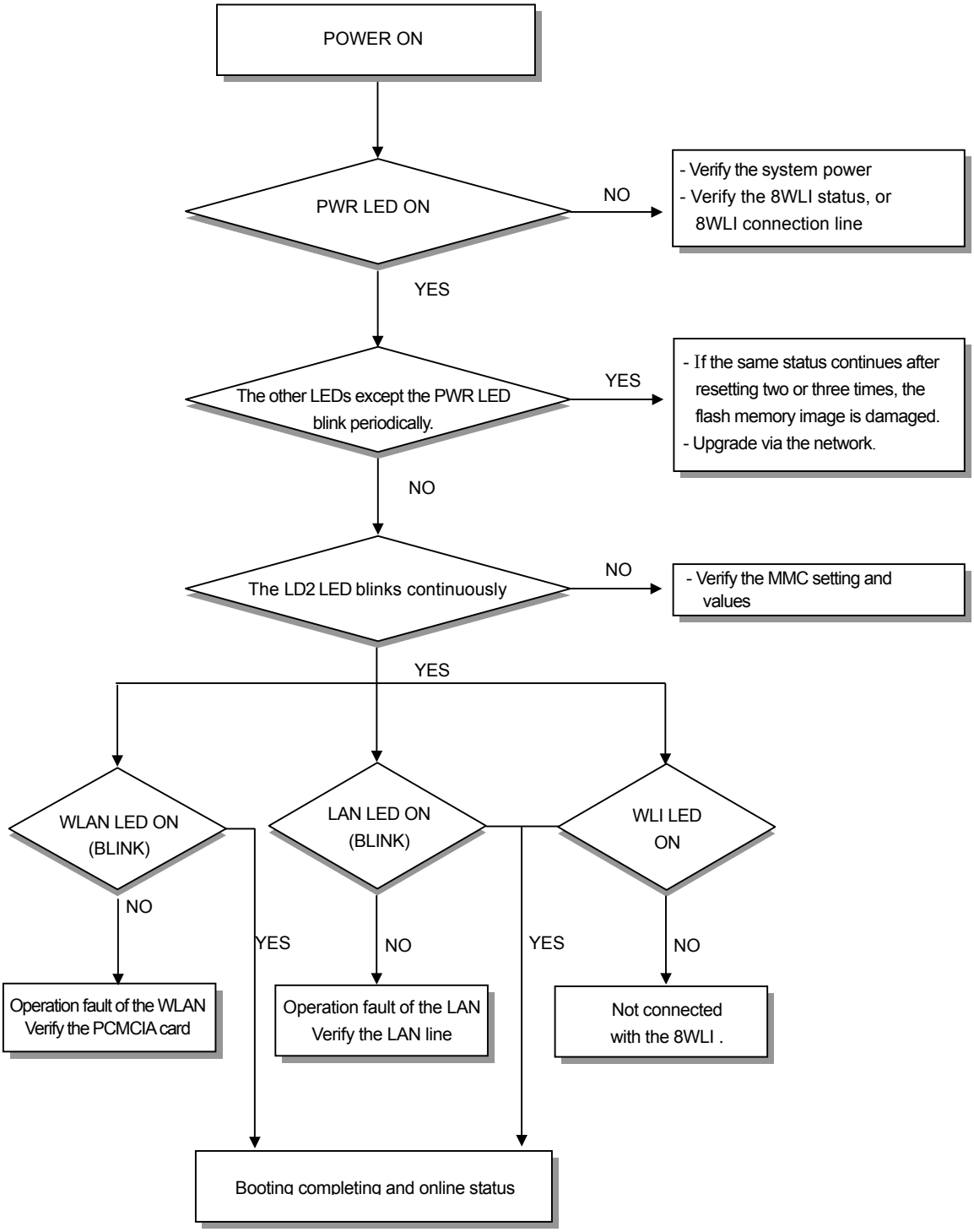

Figure 5.1 WBS24 Troubleshooting Flow Charts

1.2 Status Inquiry via a Web Browser

When the IP address of WBS24 is connected via a wired cable or wirelessly to the PC, the initialization screen will be displayed.

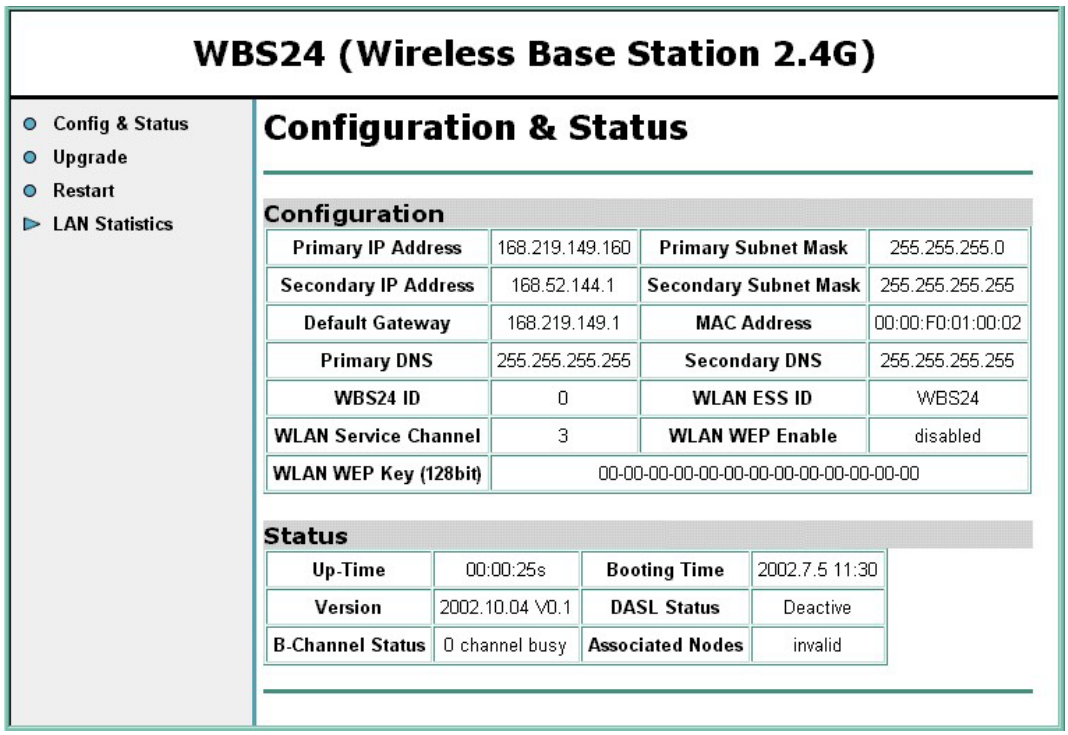

Figure 5.2 Web screen for inquiring the WBS24 status (Initial screen)

1.2.1 Description on Main Menu

4 main menus are located on the left side of the screen. The functions of each menu are shown below.

Table 5.3 Main menu of the web screen for inquiring the WBS24 status

Menu	Function
Config&Status	Possible to inquire various configuration values and statuses
Upgrade	Possible to upgrade S/W of the WBS24
Restart	Used when restarting the WBS24
LAN Statistics	Indicates statistical information on received and transmitted data of the WLAN and the Ethernet

Let's find out more about screens by each menu and function.

 © SAMSUNG Electronics Co., Ltd.

1.2.2 Inquiry of Config & Status

With the selected [Config & Status] menu, the established value and status regarding the LAN and the WLAN can be inquired.

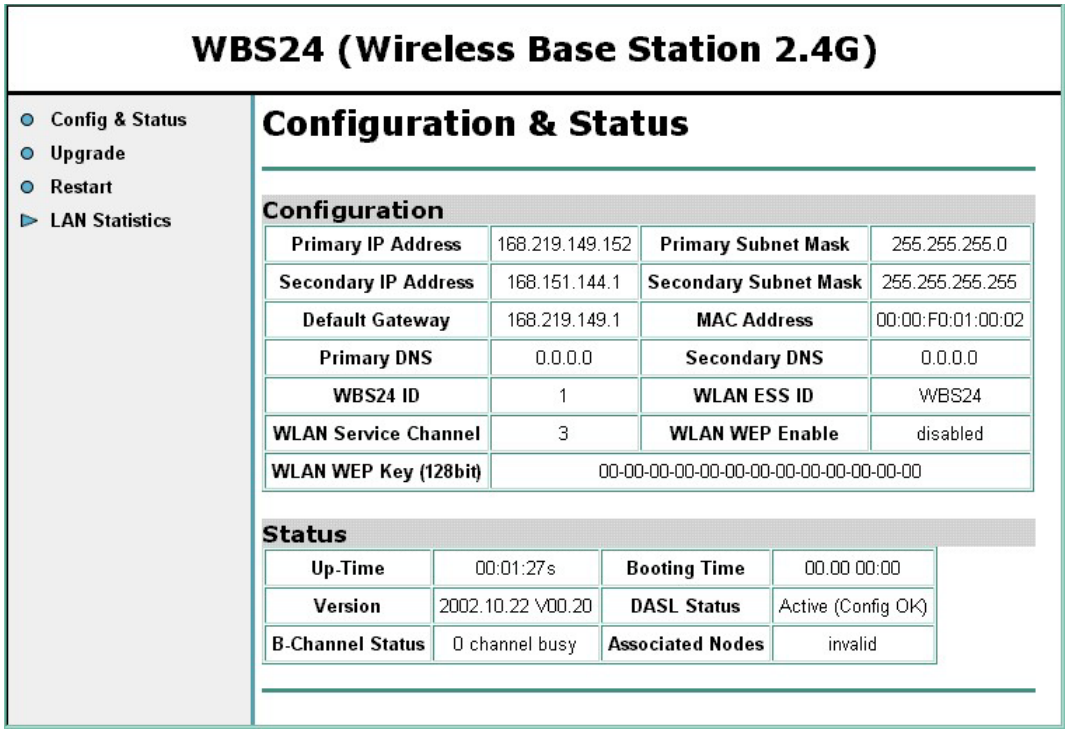

Figure 5.3 Web screen for inquiring the WBS24 status (Config & Status)

Status items are shown below.

- Up-Time : the passed time after booting
- Booting Time : the final time of WBS24 booting
- Version : Information on the WBS24 version
- DASL Status : Connection status with the 8WLI
  - Deactive : Not activated status of the DASL line
  - Active(Not Config) : DASL line is activated, and the initialized message is not received from the system.
  - Active(Config OK) : DASL line is activated, and the initialized message is received from the system.
- B-channel Status : the number of traffics being in use at present
- Associated Nodes : Unavailable at present

1.2.3 Upgrading S/W

With the selected [Upgrade] menu, the WBS24 software can be upgraded. At the first time connection, the user name and password will be asked. Enter the user name and password by inquiring from the system manager.
(Example : a user name and password are initially set as 'wlan')

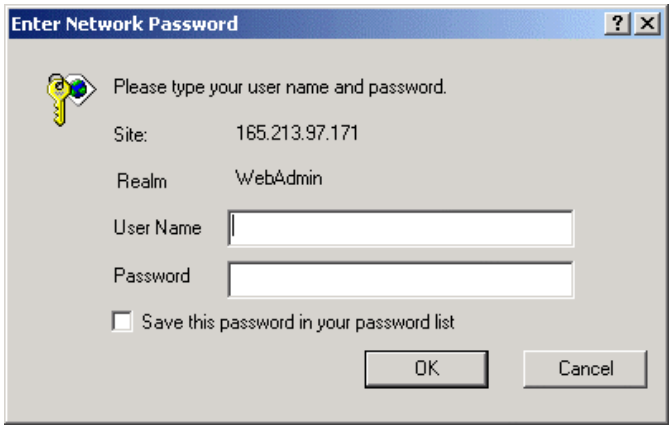

Figure 5.4 Web screen for inquiring the WBS24 status (Screen for entering password)

For the software upgrade, refer to '2.Upgrading the WBS24 S/W' in chapter5.

 © SAMSUNG Electronics Co., Ltd.

1.2.4 Restarting WBS24

By selecting the [Restart] menu, the WBS24 can be restarted.
When connecting for the first time, the user name and password will be asked. Enter the user name and password by inquiring from the system manager.(Example : a user name and password are initially set as 'wlan') When the screen as shown below is displayed, click the [Restart] button to restart the WBS24.

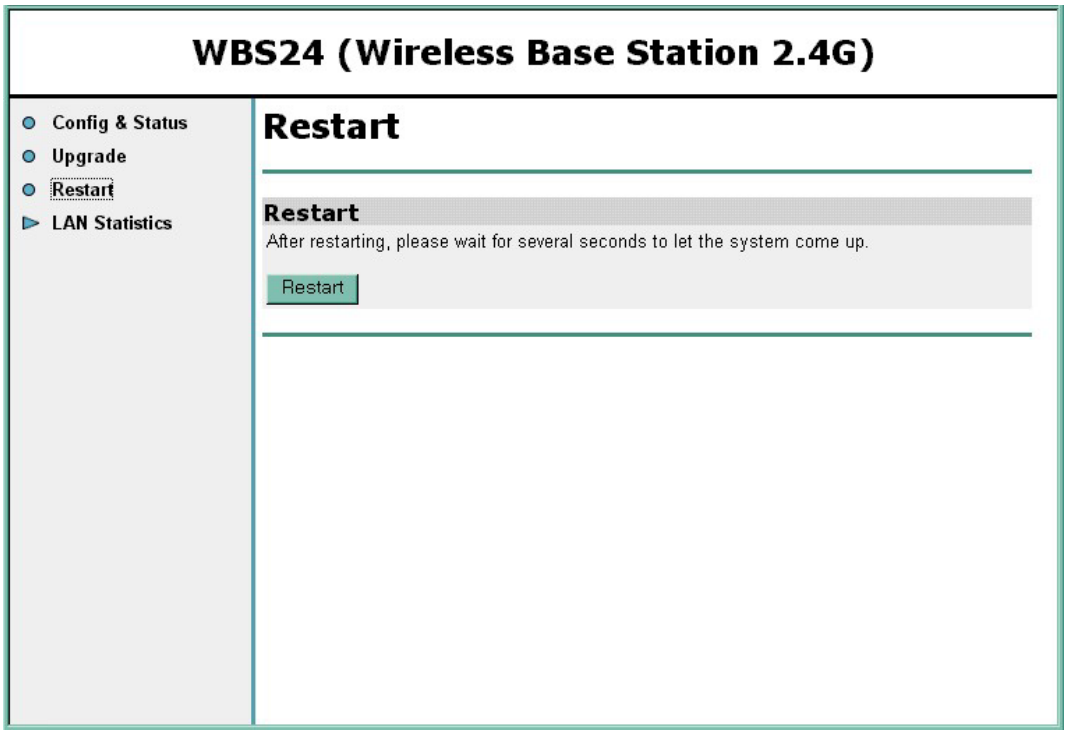

Figure 5.5 Web screen for inquiring the WBS24 status (Restart)

1.2.5 Inquiring Statistical Information of Block LAN

With the selected [LAN Statistics] menu, statistical information on data transmitted and received through the WLAN and the Ethernet can be inquired. Two sub menus will be displayed, so the statistical information by each sub-menu can be inquired.

Inquiry screen of Wilress LAN statistics

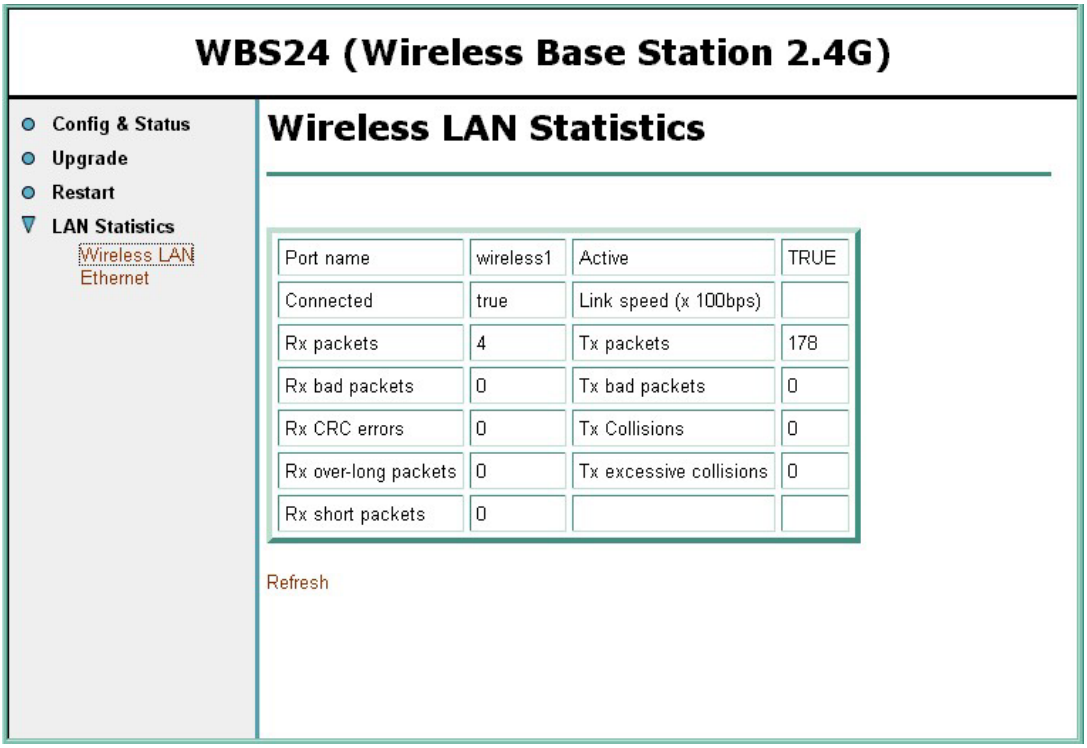

Figure 5.6 Web screen for inquiring the WBS24 status (Wireless LAN statistics)

 © SAMSUNG Electronics Co., Ltd.

Inquiry screen of the Ethernet statistics

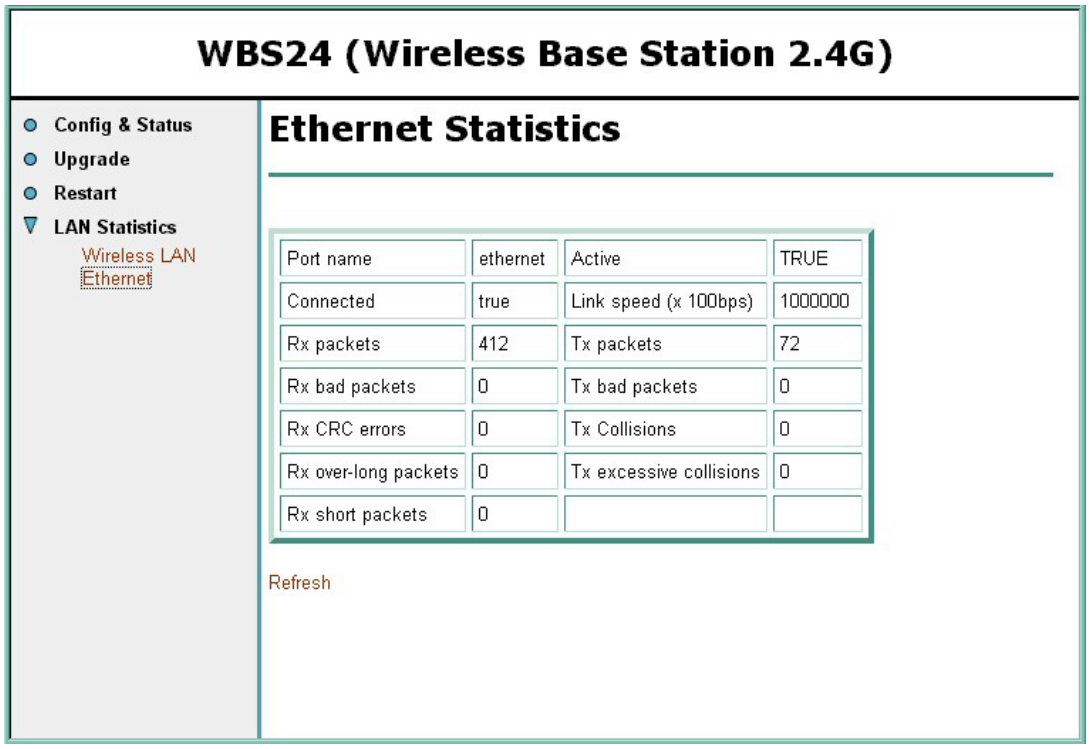

Figure 5.7 Web screen for Inquiring the WBS24 Status (Ethernet statistics)

2 Upgrading the WBS24 S/W

WBS24 S/W is upgraded in the following two methods.

- Use the web browser screen
- Use the network booting

It is recommended to use the web browser method that the setting is easy and the usage is simple.
When the WBS24 generates a fault due to the flash memory that is not functioning(When all the 5 LEDs of the WBS24 blink, except the PWR LED), the WBS24 can be recovered/upgraded using the network booting method.

2.1 Upgrading via the Web Browser

The method of using the web screen is different according to what types of the WBS24 connection is made, whether by wire or by wireless. Each type is described in the following section.

2.1.1 Wireless Connection

Preparing Materials

- PC(PC or laptop computer is recommended) that is loaded with the WLAN NIC(Network Interface Card) card.
- Upgrade file for HTTP(tar type)

Upgrade Procedure

1) After placing the PC within about 10M from the WBS24, bring up the web browser by connecting the IP address of the WBS24 wirelessly. The IP address of the WBS24 is set from the system, and the established value can be inquired through the MMC 845. Verify if the DASL status is ‘Active(Config OK)’ on the connected web screen. If the status is not ‘Active(Config OK)’ after reloading the web screen, wait for the active status.

 © SAMSUNG Electronics Co., Ltd.

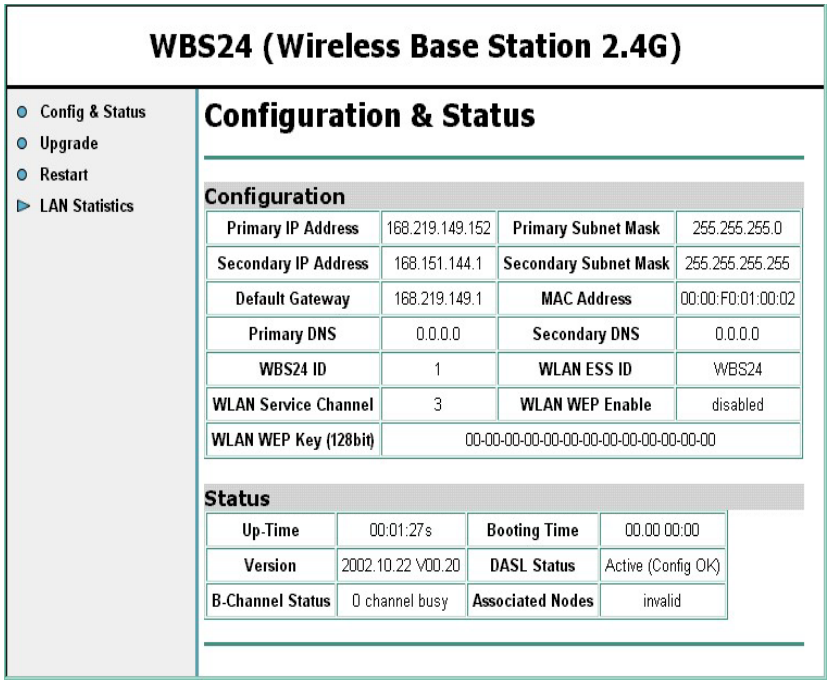

Figure 5.8 Web screen for upgrading the WBS24 S/W (Initial screen)

CAUTION

Cautions against the roaming of the WBS24

If the PC is roamed to another WBS24 while upgrading, the upgrade will be interrupted and the flash memory will not be functioning. Accordingly, locate the PC as close as possible from the WBS24. To prevent roaming to another WBS24, it is recommended that all of the WBS24 power should be turned off for safety.

2) Select the [Upgrade] menu. The user name and password will be asked if connected for the first time. Enter the user name and password by inquiring from the system manager.(Example : User name, Password-wlan)

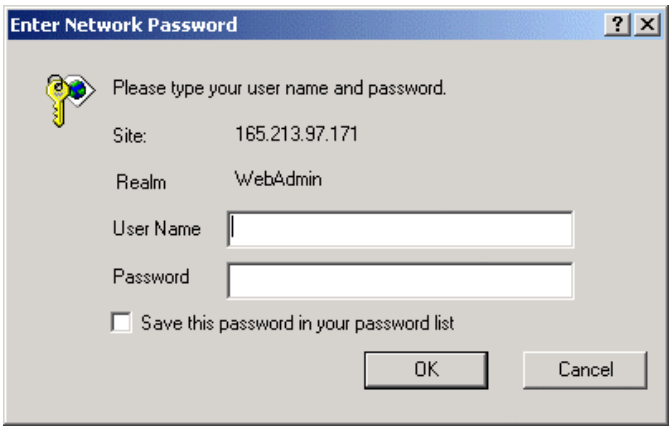

Figure 5.9 Web screen for upgrading the WBS24 S/W (Screen to enter a password)

3) If a user is authorized successfully, the following screen will show up. Click the [Indexing] button. Select the prepared upgrade file(.tar type)

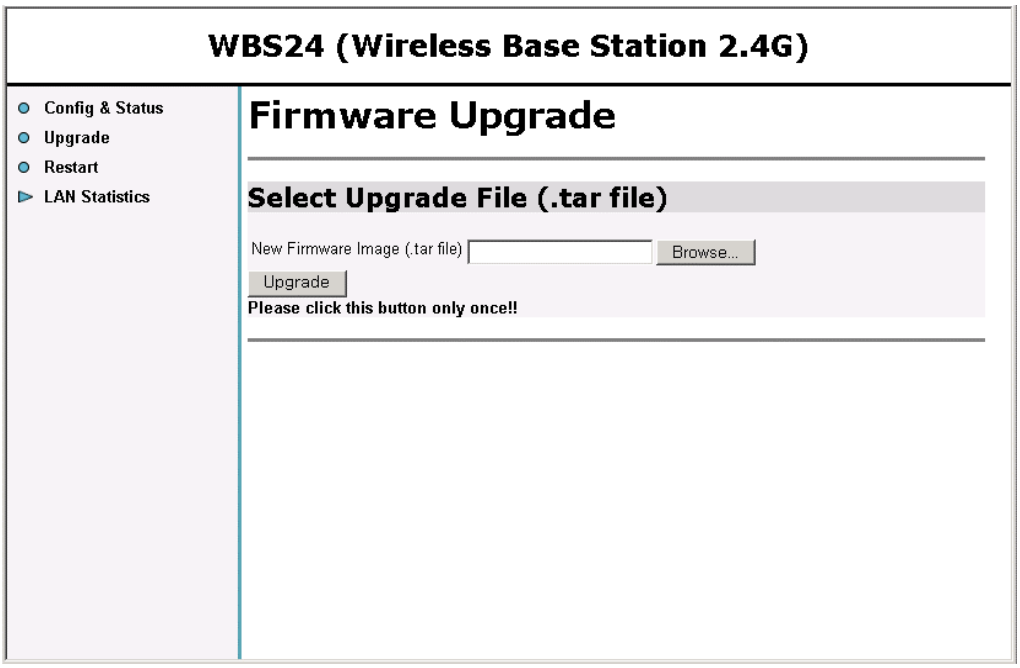

Figure 5.10 Web screen for inquiring the WBS24 S/W (Firmware upgrade)

 © SAMSUNG Electronics Co., Ltd.

4) Click the [Upgrade] menu when the following screen is displayed. At this time, click the [Upgrade] button only once. The upgrade is preceded. The required time may vary according to the WBS24 status, but it is about three or four minutes.

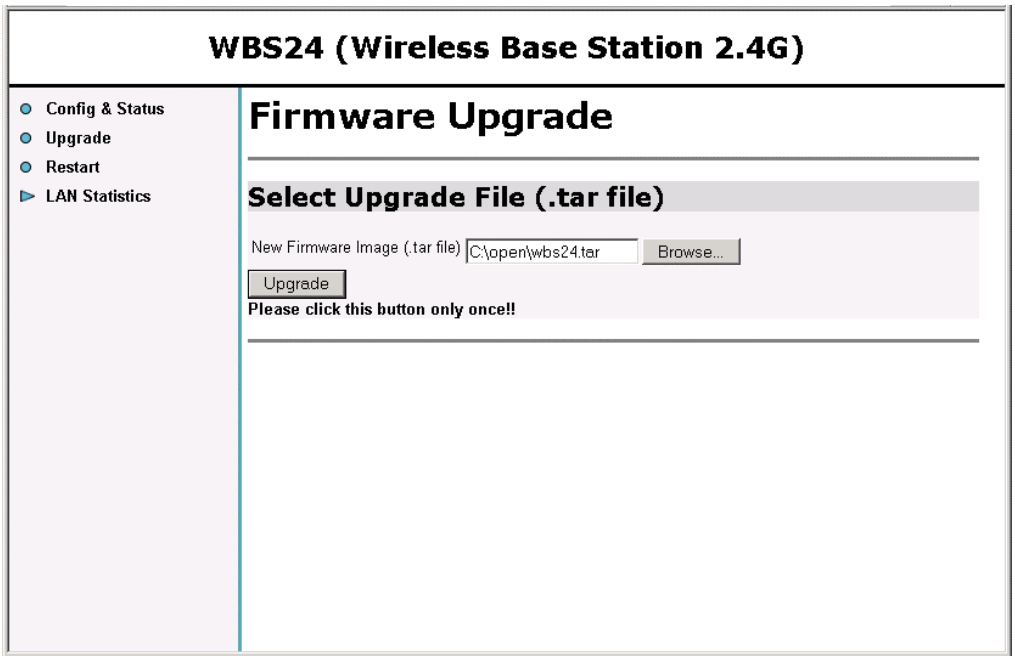

Figure 5.11 Web screen for inquiring the WBS24 S/W (Click the [Upgrade] button)

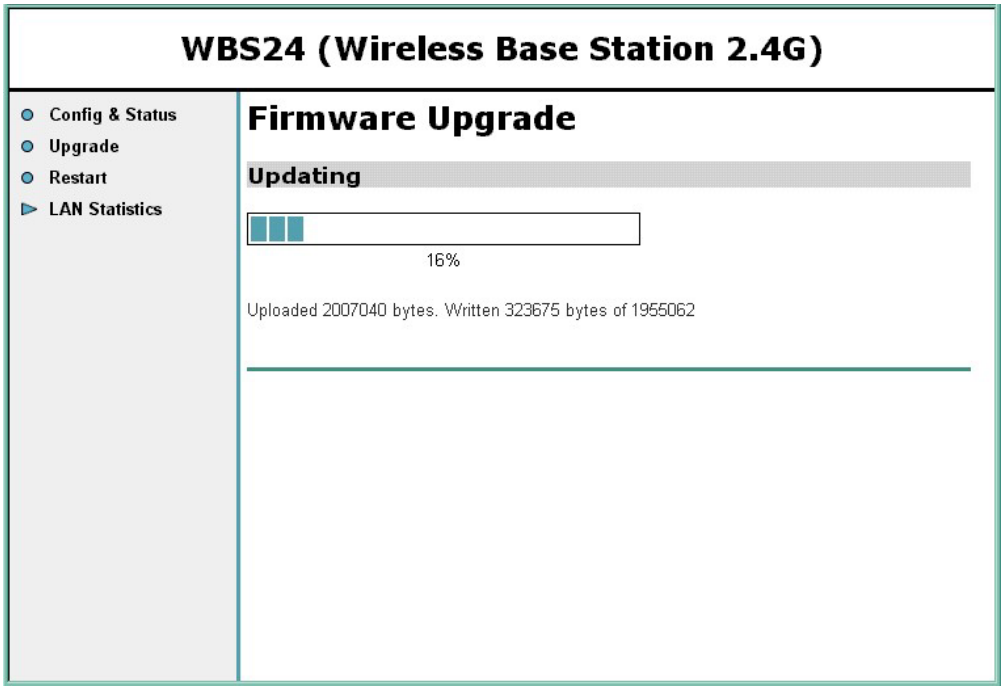

Figure 5.12 Web screen for inquiring the WBS24 S/W (In the process of upgrade)

5) When the upgrade is completed, the following screen will show up. The upgrade contents are not applied at this time, and it is applied when restarting the WBS24. If the upgrade contents are needed to apply immediately, click the [Restart] button and restart the WBS24. After restarting, verify the version on the web screen.

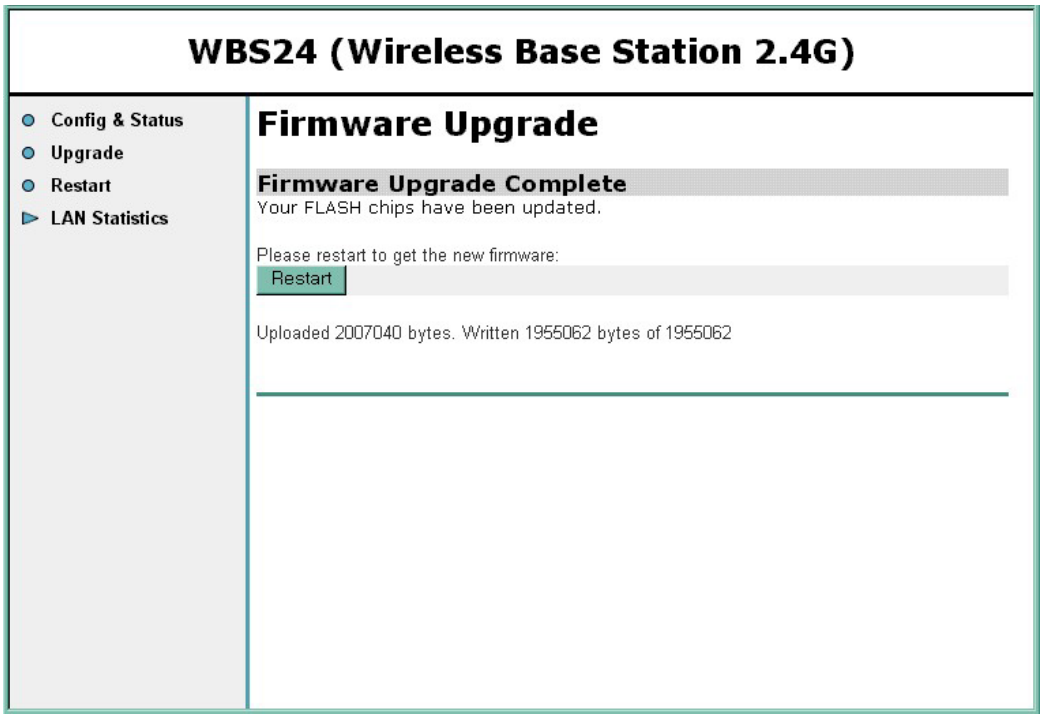

Figure 5.13 Web screen for upgrading the WBS24 S/W (Firmware Upgrade Complete)

6) When several units of WBS24 are installed, repeat No.1~No.5 by moving the PC to each WBS24.

2.1.2 Wired Connection

Preparing Materials

- PC(PC or laptop computer) that is loaded with the wire LAN port.
- Upgrade file for HTTP(tar type)

Upgrade Procedure

1) After connecting the PC to the wired LAN, connect to the IP address of WBS24. Bring up the web browser. The IP address of the WBS24 is established at the system, and the established value can be inquired via the MMC 845. Verify if the DASL status is ‘Active(Config OK)’ on the web screen. If the status is not ‘Active(Config OK)’, reload the screen and wait for the status.

 © SAMSUNG Electronics Co., Ltd.

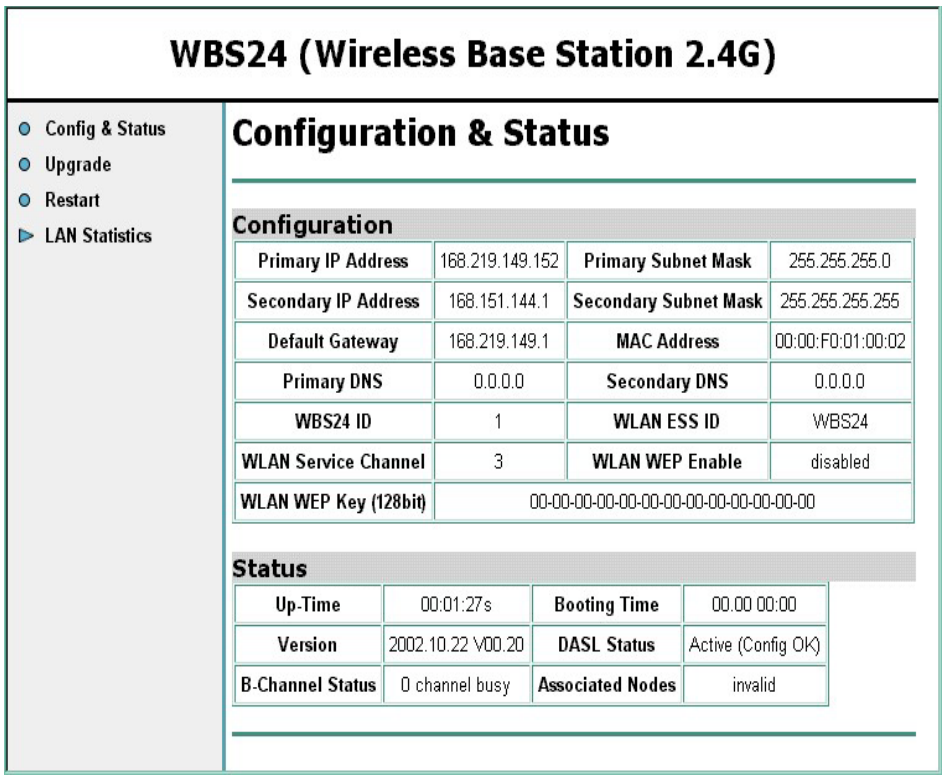

Figure 5.14 Web screen for inquiring the WBS24 S/W (Initial screen)

NOTE

Wireless Connections

It is not necessary to move the PC to the front of the WBS24 for the wireless connections.

2) The subsequent procedure is as same as No.2 ~No.5 of 'Upgrading the wireless connection.' When several units of WBS24 are installed, upgrade according to the procedures as described above by connecting to the relevant IP address of the WBS24.

2.2 Upgrading via the Network Booting

This method is used to recover an error such as non-functioning flash memory. This method is impossible to upgrade wirelessly, but only through a wired LAN. If the WBS24 is connected with a wired LAN, it is possible to upgrade without any change on the WBS24. But if not the case, the wired LAN shall be connected between the WBS24 and the PC in order to upgrade the WBS24. This section describes how to upgrade the WBS24 based on the assumption that the WBS24 is connected to the wired LAN.

Preparing Materials

- PC server with a wired LAN port
- Upgrade file for the network booting(bin type)

Upgrade Procedure

1) Set the PC to the TFTP/BootP Server for the network booting. Set the PC by using an application program for PC. This description explains how to set up using the 'Cabletron TFTP/BootP Services 2.0 S/W. When another S/W is used, refer to the relevant usage of S/W. The following describes how to set up 'Cabletron TFTP/BootP Services 2.0 S/W'.

- Receive the program and execute the Setup procedure to set up the program.
- Execute the program(When designating a default directory, execute 'C:\TFTPBOOT\BIN\TFTPBOOT.EXE') and click the [Start Download] button.
- Enter IP of the installed PC and click the [BootP Server] button.

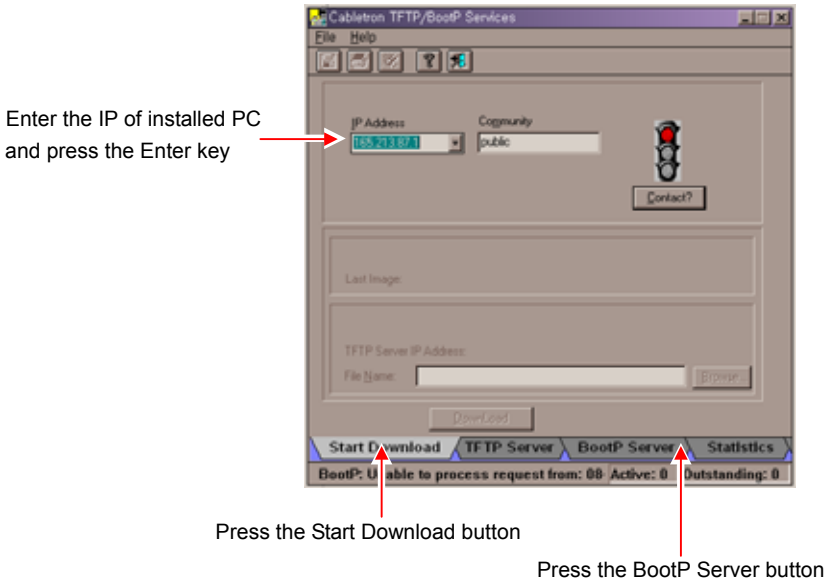

Figure 5.15 Upgrading the WBS24 S/W via the Network Booting (1)

 © SAMSUNG Electronics Co., Ltd.

- Then the following screen will show up. After entering the MAC Address, IP Address and File Name, click the [Update] button.

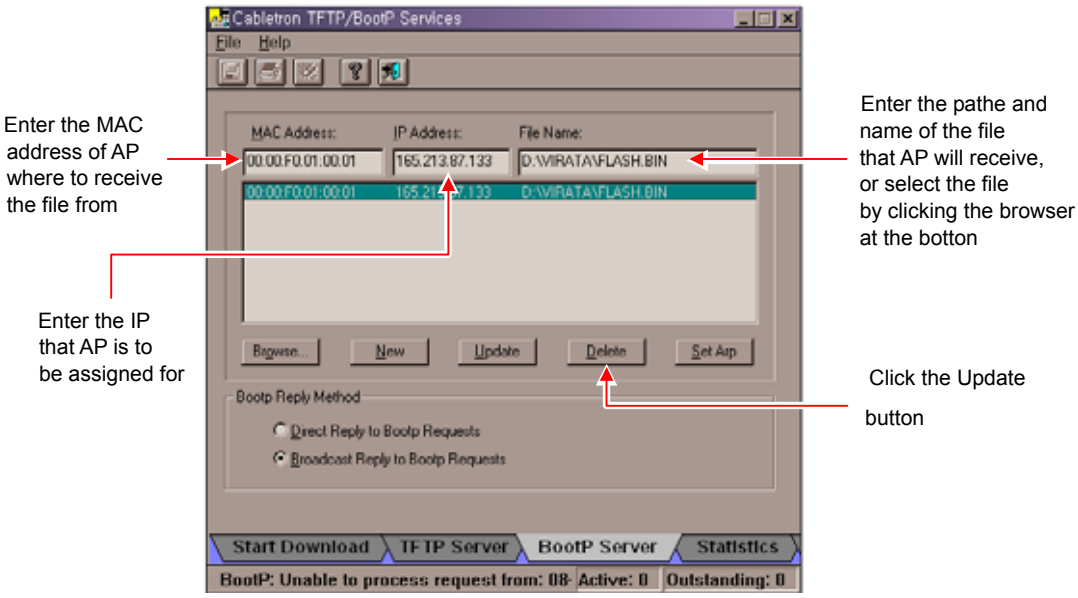

Figure 5.16 Upgrading the WBS24 S/W via the Network Booting (2)

2) Turn off the power of WBS24 and turn it on again. Then upgrading is performed automatically. If upgrading is not performed and the error LED is repeated, verify the connection status of the wired LAN or the setting status of TFTP/BootP server. If upgrading is normally completed, the WLAN, LAN and WLI LEDs will be turned on as a Blue color after booting. Verify the S/W version on the web screen.

3 Upgrading the 8WLI S/W

3.1 Connecting the Console Terminal to the 8WLI Card

1) In order to upgrade the 8WLI card software, either PC with the terminal emulation on, such as a console terminal, or an ASCII terminal like VT-100 and VT-220 types is used. When connecting the console terminal to the 8WLI card, the console cable with 9-pin RS-232C connector as shown below is used.

Figure 5.17 Connecting Cable of the Console Terminal

2) Connect one end of the console to the RS-232C connector of the 8WLI card, and connect the other end to the serial port of the console terminal(PC).

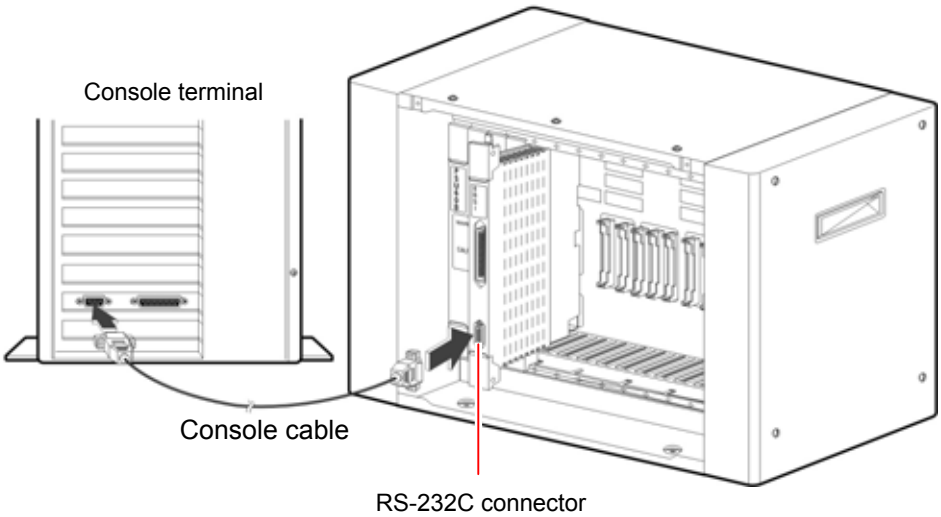

Figure 5.18 Connecting the Console Terminal to the 8WLI Card

 © SAMSUNG Electronics Co., Ltd.

3.2 Configuring the Console Terminal

The values of the console terminal to be used are configured as shown below.

- Emulation : compatible with VT-100/ANSI
- Bits per second : 9600 bps
- Stop bit : 1
- Data bit : 8
- Parity bit : None
- Flow control : None

The method of setting the console terminal can be different according to the terminal type or the management system. The file(WLIROM.HEX, MWLIROM.HEX) is loaded to the 8WLI card in the following two methods.

- Using the Tera terminal of the Windows 95/98 operating system
- Using the 'qmodem.exe' on the DOS window

3.2.1 Loading a File with the Tera Terminal

1) Turn on the PC(Windows95/98 O/S).

2) Execute the Tera terminal program

3) If console terminal is not connected, 'Cannot open COM1' message windows appears. Then, Click the <file>→<New Connection> to open the new window.

4) Select the <Setup>→<Serial Port> from the new window, and set as shown below then click the [Ok] button.
- Bits per second : 9600 bps
- Stop bit : 1
- Data bit : 8
- Parity bit : None
- Flow control : None

5) Then a new Tera terminal will show up.

Upgrading a New Software

The 8WLI card can upgrade the software by downloading WLIROM HEX file and MWLIROM.HEX file via the console terminal. After storing both files in the console terminal, download them following the method below.

1) When the 8WLI card is normally operated, the following message will show up. Click the [ENTER] key.

```
VoWLAN Console <8-Port WLI Board>
```

2) Enter the 'flo' command at the prompt and click the [ENTER] key, the following massage will show up.

```
<WLI>flo
================== Select One ========================
[1]  Single  WLI   HEX FILE Loading <Addr = 0x00110000>
[2]  Multi   WLI   HEX FILE Loading <Addr = 0x00190000>
[R]  Restart
```

CAUTION

Prevention of executing the 'flo' command

If the 'flo' command is executed, the power of all base stations connected to the 8WLI card is turned off and their wireless LAN function will be interrupted.

3) Select '1' and load the WLIROM.HEX file, from the PC to the 8WLI card. Then the following message will show up.

```
Selected 1> Single- WLI HEX FILE Loading
Please Start Loading!!
```

4) Click the 'Send file' on the File Menu of the Tera terminal window.

5) Then the <Sending the text file> window will show up. Select the WLIROM HEX file and click the [Ok] button.

6) While the WLIROM HEX file is being transmitted to the 8WLI card, the transmitted contents will be indicated on the screen. If the file transmission is completed, information on the transmitted HEX file will show up. It takes about fifteen minutes to send the file to the 8WLI card.

 © SAMSUNG Electronics Co., Ltd.

```
=========HEX FILE INFORMATION =====================
   HEX FILE START ADDR  = 0x00110000
HEX FILE END ADDR       = 0x0013465D
HEX FILE TOTAL ADDR     = 0x0002465D
=========== FLASH MEMORY WRITE START===============
STEP 1. SECTOR ERASE    → SUCCESS
STEP 2. PROGRAM WRITE   → SUCCESS
=========== FLASH MEMORY WRITE END ===============
Please [R] key to Restart or [L] key to Loading Again !!
```

7) Enter ‘L’, and then the following menu will show up. Enter ‘2 to transmit the MWLIROM.HEX file to the 8WLI card.

```
<WLI> flo
============ Select One =================
[1] Single WLI HEX FILE Loading <Addr = 0x00110000>
[2] Multi WLI HEX FILE Loading <Addr  = 0x00190000>
[3] Restart
```

8) Click the ‘Send file’ on the File Menu of the Tera terminal window.

9) Then the <Sending the text file> window will show up. Select the MWLIROM.HEX file and click the [Ok] button.

10) Enter ‘R’. If two HEX files are properly transmitted, the following screen will show up.

```
**************************************************
* VoWLAN Console <8-Port WLI Board >            *
**************************************************
```

3.2.2 Loading the File with Qmodem

1) Exeute qmodem.exe on the DOS window. This description explains how to load a file if the installed qmodem version is 'SST V3.1a'. If another qmodem version is used, refer to the relevant manual.

2) Click the [Alt+P] key to set the modem value. Then the <Set Modem Speed> window will show up.

3) Click the [ENTER] key, and check if the <8WLI> prompt is generated or not on the main window. If the <8WLI> prompt is not generated, the user shall verify the cable status, the traffic port status of PC, and the setting status of the modem configuration parameter.

4) Enter the 'flo' command at the <8WLI> prompt. Then a new message will be displayed.

```
<WLI> flo
============== Select One =============
[1]  Single  WLI   HEX  FILE  Loading  <Addr  =  0x00110000>
[2]  Multi  WLI    HEX  FILE  Loading  <Addr  =  0x00190000>
[3]  Restart
```

5) Enter '1' and select [1], and then the following message will be displayed on the main window.

```
Selected 1> Single – WLI HEX FILE Loading
Please Start Loading !!
```

6) Click the [Page-Up] to load the selected ROM file to the 8WLI card. Then the following message will show up.

```
**[  Upload Protocols]**
* A) Ascii            *
* X) Xmodem           *
* C) Xmodem CRC       *
*R) Relaxed  Xmodem   *
*Y) 1K-Xmodem         *
*B) Ymodem Batch      *
*Your choice  ?       *
*********************
```

 © SAMSUNG Electronics Co., Ltd.

7) Select the < A)Ascii > menu by clicking [A] button on the <Upload Protocols> window.

8) Enter the path of the file to be uploaded. For instance, if the file to be uploaded is located as same as the qmodem file, enter the '.\WLIROM.HEX'. If the file to be uploaded is not located as same as the qmodem file, enter the file name as well as the whole path of the upload file.

9) If enter the file name, following 'Upload Files(Transmit)' window appears

```
***********************Upload Files(Transmit)********************
 Enter the transfer mode:
1)Prompted   2) Time  delay  3) No delay
*****************************************************************
```

10) Enter '3' and then the following 11) message will be displayed. It is possible to verify the upload status by scrolling the data.

11) If the upload is completed, the following HEX information will be displayed. The displayed information can be different according to the software version of the 8WLI. If 'Flash Memory Write End'is displayed, it means that uploading is successfully completed.

```
===========HEX FILE INFORMATION ==========
HEX  FILE  START  ADDR =  0x00110000
HEX  FILE  END  ADDR   =  0x00013465D
HEX  FILE  TOTAL  LEN  =  0x0002465D

------------ FLASH MEMORY WRITE START -------------
STEP 1. SECTOR ERASE  → SUCCESS
STEP 2. PROGRAM WRITE → SUCCESS
---------- FLASH MEMORY WRITE END ---------------

Please [R] key to Restart or [L] key to Loading Again !!
```

12) Click [L] and then the following message will show up.

```
<WLI>file
========== Select One =============
[1]  Single WLI  HEX  FILE Loading  <Addr  = 0x00110000>
[2]  Multi  WLI  HEX  FILE Loading  <Addr  = 0x00190000>
[R]  Restart
```

13) Select [2] menu to load the WLIROM..HEX file. Then the following message will show up.

```
Selected  1> Single- WLI HEX  FILE Loading
Please  Start  Loading !!
```

14) Perform No.6)~No.10) as shown above and upload the MWLIROM.HEX file. Select the MWLIROM.HEX file instead of the WLIROM.HEX file. After uploading the MWLIROM.HEX file, the following message will show up.

```
================HEX FILE INFORMATION ====================
  HEX  FILE  START  ADDR        =  0x00110000
  HEX  FILE  END    ADDR        =  0x0012465D
  HEX  FILE  TOTAL  LEN         =  0x0002465D
------------ FLASH MEMORY  WRITE  START ---------------------
STEP 1. SECTOR ERASE   →SUCCESS
STEP 2. PROGRAM WRITE  → SUCCESS
----------- FLASH MEMORY WRITE END ----------------------
Please [R] key to Restart or [L] key to Loading Again !!
```

The message can be different according to the WLI software version. If 'Flash Memory Write End' shows up, it means that uploading is successfully completed.

15) Click [R] and restart the 8WLI card. If the file is normally transmitted, the following main window will show up.

```
*****************************************
* VoWLAN Console < 8- Port WLI Board >    *
*****************************************
```

 © SAMSUNG Electronics Co., Ltd.

Annex A

WLAN (802.11b/DSSS) Specifications

This annex describes the features and specification of a 802.11b/DSSS standard, a wireless LAN standard.

1 Feature Comparison with Other Standards

Table A.1 Feature Comparison with WLAN (802.11b/DSSS) Standards

Name of Standards	Used Frequency	Payload Transmittance Speed	Modulation Way	Feature
IEEE802.11b	2400~2483.5 MHz (US, Canada, ETSI) 2400~2497 MHz (Japan)	1/2/5.5/11 Mbps	FHSS, BPSK, QPSK, CCK(DSSS)	CSMA/CA
IEEE802.11a	5 GHz	6/9/~36/48/54Mbps	OFDM	CSMA/CA
ETSI/BRAN HiperLAN/Type2 ARIB HiSWANa	5 GHz	6/9/~36/48/54Mbps	OFDM	Connection-Type
Bluetooth IEEE802.15.1	2.4 GHz	1 Mbps	FHSS	Hybrid-Type
HomeRF SWAP	2.4 GHz	10 Mbps	FHSS	Hybrid-Type
PWR				

2 Operating Frequency by Channel and Country

Table A.2 Operating Frequency of WLAN (802.11b/DSSS) by Channel and Country

Channel	Frequency (MHz)	Korea, US/ Canada	European Telecommunications Standards Institute(ETSI)	Spain	France	Japan
1	2412	Operating	Operating			
2	2417	Operating	Operating			
3	2422	Operating	Operating			
4	2427	Operating	Operating			
5	2432	Operating	Operating			
6	2437	Operating	Operating			
7	2442	Operating	Operating			
8	2447	Operating	Operating			
9	2452	Operating	Operating			
10	2457	Operating	Operating	Operating	Operating	
11	2462	Operating	Operating	Operating	Operating	
12	2467		Operating		Operating	
13	2472		Operating		Operating	
14	2484					Operating

 © SAMSUNG Electronics Co., Ltd.

3 Definitions and Features by Layer

3.1 Physical Layer

DSSS Physical Layer

DSSS physical layer diffuses data to 11 bit Barker words before sending the data.
11 bit Barker words have 10.4 dB of processing gain that meets FCC Part 15.247.
All clients use the same 11 bit Barker words.
DSSS physical layer has a total of 14 channels and null-to-null bandwidth is 22 MHz.
Frequency scope is from 2.400 MHz through 2.483 MHz. It has 3 non-overlapping channels.
Modulation ways for each data rate and other information are as follows.

Table A.3 Information on the Data Rate of DSSS Physical Layer

Data Rate	Code Length	Modulation	Symbol Rate	Bits/Symbol
1 Mbps	11(Barker Sequence)	BPSK	1 MSps (Mega Symbol per Sec)	1
2 Mbps	11(Barker Sequence)	QPSK	1 MSps	2
5.5 Mbps	8(CCK)	QPSK	1.375 MSps	4
11 Mbps	8(CCK)	QPSK	1.375 MSps	8

FHSS Physical Layer

FHSS physical layer supports 2 level GFSK 1 Mbps of basic rate as well as 4 level GFSK 2Mbps optionally.
It has 79 channels and the bandwidth of each channel is 1 MHz. It hops 2.5 per second. This is a provision for spreading in FCC Part 15.247. FHSS physical layer has 22 hop patterns as well.

Infrared Physical Layer

Infrared physical layer uses pulse position modulation(PPM) having 4 or 6 levels.
Operating data rates are 1 Mbps and 2 Mbps.

3.2 MAC Layer

MAC layer supports both an ad-hoc network and a client/server infrastructure network. CSMA/CA are base on distributed coordination function(DCF) and uses random back off algorithm to prevent the layer from collide with other media.
Point coordination function(PCF) is optional and is used for adjusting the priority of media.
PCF enables access point to operate as point coordinator in basic service coverage areas and clients get priority. PCF is suitable for time-bounded services such as voice application.
The details of CSMA/CA are as follows.

Carrier Sense Multiple Access/Collision Avoidance (CSMA/CA)

Standardized 802.11 uses CSMA to implement peer to peer as a basic connection way because CSMA expands the connection way of Ethernet(IEEE802.3) to wireless network.
It is not easy to detect collision in CSMA unlike cable media. Since there is a station that fails to detect carriers within a section due to hidden terminals, A CSMA/CA with Ack way reserving transmittance time using RTS/CTS frame and returning Ack frame for checking transmittance is used.
Since CSMA is based on Distribution Coordination Function(DCF), the time of gap(IFS) for sending CTS and Ack frames that operators do not want to disconnect to CSMA is supposed to be shorter than that of IFS for sending RTS or data frames.
In addition, associated IFS should be used when an error occurs due to Point Coordination Function PCF) and interference in Access Point AP).

 © SAMSUNG Electronics Co., Ltd.

3.3 Data Link/Network Layer

The flexibility of network construction, a strength of wireless LAN is fully considered in IEEE802.11 and is expressed in network models. Network models defined in IEEE802.11 are categorized into an ad hoc network and Infra network.

Ad Hoc Network

The Ad hoc network consists of terminals only and is based on direct communication between terminals. Its operation is to be recognized by Zone ID called BSS ID logically. The Ad hoc network is suitable to collaborate through information sharing or networks using wireless LAN where networks are not equipped.

Figure A.1 Data Link/Network Layer of WLAN-Ad hoc Network Model

Infra Network

Infra network is able to communicate with terminals that have at least one Access Point(AP) and are within areas other than the areas of Infra network. The models of the infra network has a Distribution System(DS), which serves as media.
DS is an abstract concept and is included in network models. It distributes the definition of network as BSS ID.
Specifications do not describe the implementation method of distribution. However, wireless LAN connected to the DS is called AP in the specifications. Management protocols that operate wireless LAN using infra network are defined in many ways. AP manages the operation of the zone and makes master and slave relationship among terminals in the zone. For this, AP sends beacon to the operating zone.
It is impossible to send user data unless all terminals perform association to AP.

NOTE

Beacon and Association

Beacon refers to sending code sending necessary information to wireless LAN. Association means that terminals are connected to one AP.

Wireless LAN provides terminal users with wireless communication services through AP as shown in below figure.

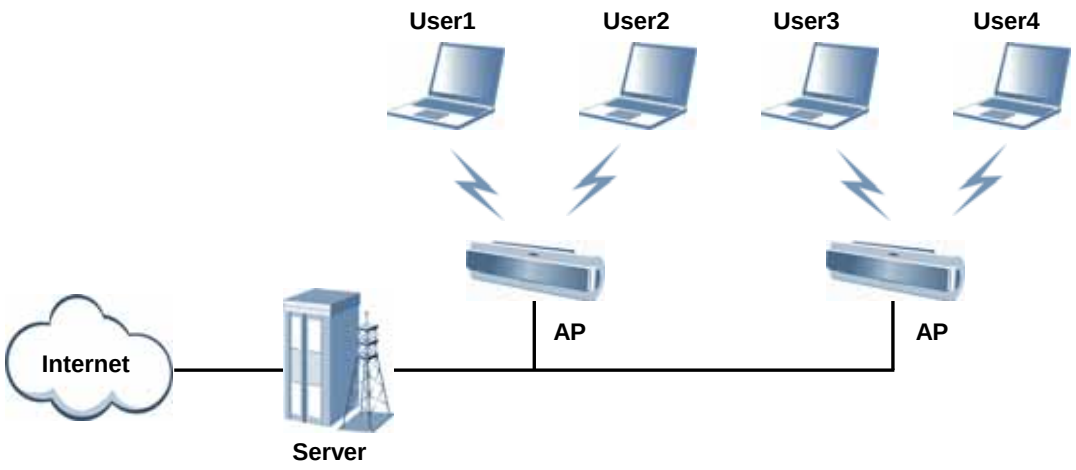

Figure A.2 Data Link/Network Layer of WLAN-Infra Network Model

 © SAMSUNG Electronics Co., Ltd.

4 WLAN Frame Structure

4.1 Short PLCP PPDU Frame Format

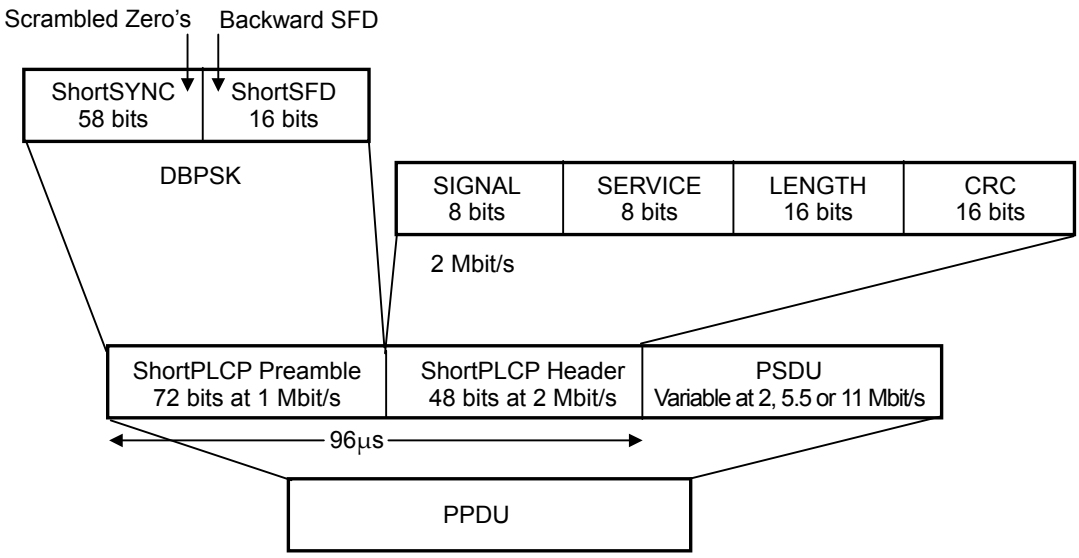

Figure A.3 Short PLCP PPDU Frame Format of WLAN

4.2 Long PLCP PPDU Frame Format

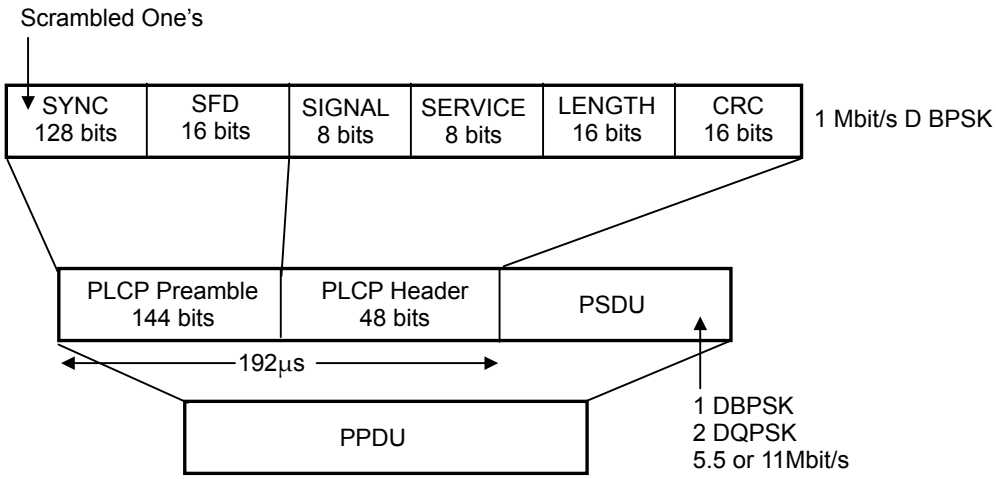

Figure A.4 Long PLCP PPDU Frame Format of WLAN

5 Quality of Service (QoS)

QoS refers to the capability of networks that reduces the traffic volume of networks or reserves some bandwidth. Network administrators provide their networks with QoS in many ways. QoS does not mean 100% assurance of bandwidth or 0 % of packet loss rate. However, QoS enables network administrators to send specific traffic much faster or reserve network bandwidth. Network administrators can manage the transmittance of traffic more efficiently than before.
QoS is the capability of networks that meets the service level of a specific application of networks. The simplest QoS sends network traffic according to the priority of transmittance and prior traffic is transmitted first.

6 Security

In wireless communication, data might leak or impersonation might be happen. Therefore, MAC sub-layer is using encryption. Many Access Point(AP) products have filtering function in the bridge or router of upper layer due to the MAC address of the station.
According to IEEE802.11, encryption is made by combining 40 bits or 104 bits button generated by 24 bits key and RC4 algorithm of RSA at each station. This is called Wired Equivalent Privacy(WEP).
IEEE802.11 indicates that WLAN might be decoded due to long interception because keys are fixed at stations. Therefore, the strict implementation of WEP is discussed in IEEE802.11i. IEEE discusses procedures for authentication on wireless LAN and Ethernet to prescribe them in IEEE802.1x standard.

 © SAMSUNG Electronics Co., Ltd.

Annex B

Antenna Beam Pattern of WBS24

This annex displays the beam pattern of WBS24 antenna in illustration.

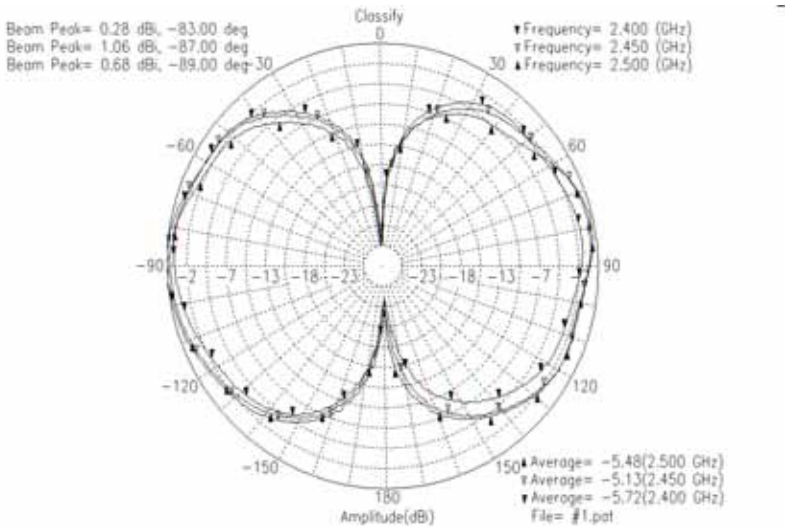

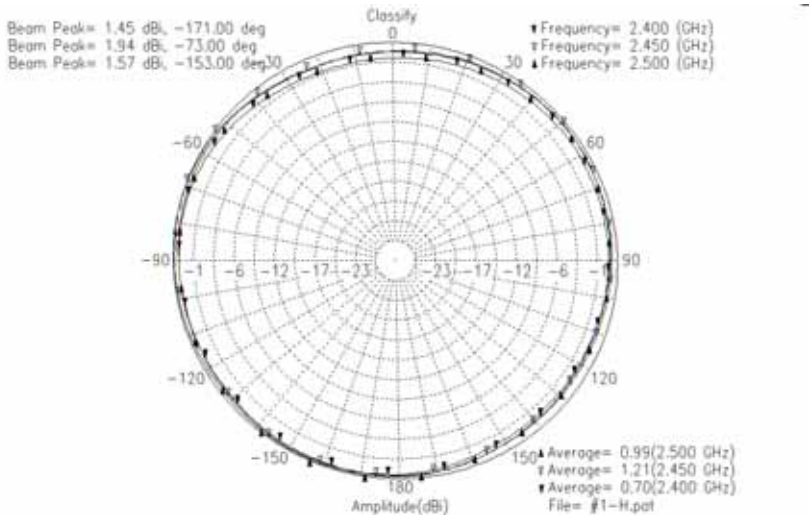

Figure B.1 Beam Pattern of WBS24 Antenna

This page is intentionally left blank.

© SAMSUNG Electronics Co., Ltd.

ABBREVIATION

A

AP	Access Point

B

BRI	Basic Rate Interface

D

DSP	Digital Signal Processor
DASL	Digital Adapter for Subscriber Loops
DSSS	Direct Sequence Spread Spectrum

E

ETSI	European Telecommunications Standards Institute

F

FCC	Federal Communication Commission

I

ISM	Industrial Scientific and Medical
IP	Internet Protocol
ISDN	Integrated Services Digital Network

L

LED	Light Emitting Diode
LAN	Local Area Network

M

MAC	Media Access Control

N

NIC	Network Interface Card

P

PSAP	Public Safety Answering Point
PHY	Physical layer protocol
PCMCIA	Personal Computer Memory Card International Association slot
PDA	Personal Digital Assistant
PLL	Phase Locked Loop

Q

QPSK	Quadrature Phase Shift Keying

R

RF	Radio Frequency

S

SDRAM	Synchronous Dynamic Random Access Memory
SIP	Session Initiation Protocol

U

USB	Universal Serial Bus
UART	Universal Asynchronous Receiver/Transmitter
UL	Underwriters Laboratories

V

VoWLAN	Voice Over WLAN
VOIP	Voice Over Internet Protocol

W

WBS24	Wireless Base Station 2.4GHz
WiFi	Wireless Fidelity
WIP-5000M	Wireless IP-Phone 5000 Mobile type
WLI	Wireless LAN Interface card
WLAN	Wireless LAN

© SAMSUNG Electronics Co., Ltd.

OfficeServ 500 Wireless LAN

Service Manual

©2003 Samsung Electronics Co., Ltd.
All rights reserved.

Information in this document is proprietary to SAMSUNG Electronics Co., Ltd

No information contained here may be copied, translated, transcribed or duplicated by any form without the prior written consent of SAMSUNG.

Information in this document is subject to change without notice.

Visit us at

http://www.samsungnetwork.com

SAMSUNG ELECTRONICS