System Check_Head_835MHz

DUT: D835V2-4d167

Communication System: CW; Frequency: 835 MHz;Duty Cycle: 1:1
Medium: HSL_850_191031 Medium parameters used: f = 835 MHz; σ = 0.896 S/m; ε_r = 42.318; ρ = 1000 kg/m^3
Ambient Temperature：23.3 ℃; Liquid Temperature：22.3 ℃

DASY5 Configuration:
- Probe: EX3DV4 - SN3642; ConvF(9.05, 9.05, 9.05) @ 835 MHz; Calibrated: 2019/4/29
- Sensor-Surface: 1.4mm (Mechanical Surface Detection)
- Electronics: DAE4 Sn1311; Calibrated: 2019/8/27
- Phantom: SAM_Left; Type: QD000P40CD; Serial: TP:1477
- Measurement SW: DASY52, Version 52.10 (2);SEMCAD X Version 14.6.12 (7470)

Pin=250mW/Area Scan (61x61x1): Interpolated grid: dx=1.500 mm, dy=1.500 mm
Maximum value of SAR (interpolated) = 3.28 W/kg

Pin=250mW/Zoom Scan (5x5x7)/Cube 0: Measurement grid: dx=8mm, dy=8mm, dz=5mm
Reference Value = 63.69 V/m; Power Drift = -0.17 dB
Peak SAR (extrapolated) = 3.65 W/kg
SAR(1 g) = 2.41 W/kg; SAR(10 g) = 1.57 W/kg
Maximum value of SAR (measured) = 3.24 W/kg

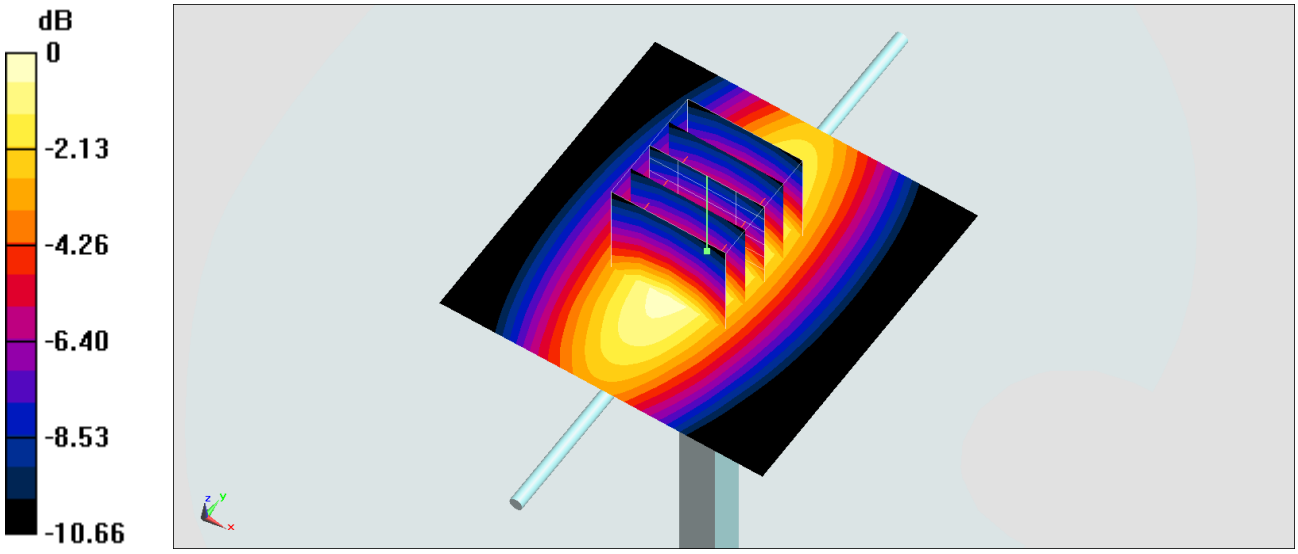

0 dB = 3.24 W/kg = 5.11 dBW/kg

System Check_Head_835MHz

DUT: D835V2-4d167

Communication System: CW; Frequency: 835 MHz;Duty Cycle: 1:1
Medium: HSL_850_191031 Medium parameters used: f = 835 MHz; σ = 0.896 S/m; ε_r = 42.318; ρ = 1000 kg/m^3
Ambient Temperature：23.3 ℃; Liquid Temperature：22.3 ℃

DASY5 Configuration:
- Probe: EX3DV4 - SN3925; ConvF(10.12, 10.12, 10.12) @ 835 MHz; Calibrated: 2019/9/20
- Sensor-Surface: 1.4mm (Mechanical Surface Detection)
- Electronics: DAE4 Sn1311; Calibrated: 2019/8/27
- Phantom: SAM_Left; Type: QD000P40CD; Serial: TP:1477
- Measurement SW: DASY52, Version 52.10 (2);SEMCAD X Version 14.6.12 (7470)

Pin=250mW/Area Scan (61x61x1): Interpolated grid: dx=1.500 mm, dy=1.500 mm
Maximum value of SAR (interpolated) = 3.22 W/kg

Pin=250mW/Zoom Scan (5x5x7)/Cube 0: Measurement grid: dx=8mm, dy=8mm, dz=5mm
Reference Value = 62.62 V/m; Power Drift = -0.05 dB
Peak SAR (extrapolated) = 3.67 W/kg
SAR(1 g) = 2.42 W/kg; SAR(10 g) = 1.58 W/kg
Maximum value of SAR (measured) = 3.23 W/kg

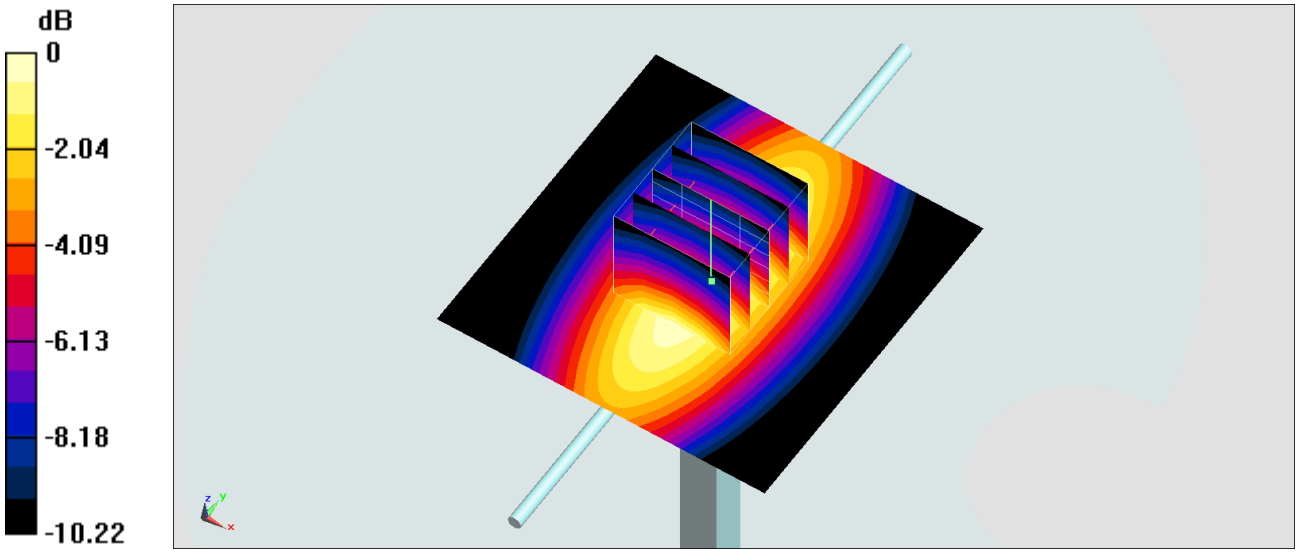

0 dB = 3.23 W/kg = 5.09 dBW/kg

System Check_Head_1750MHz

DUT: D1750V2-1112

Communication System: CW; Frequency: 1750 MHz;Duty Cycle: 1:1
Medium: HSL_1750_191029 Medium parameters used: f = 1750 MHz; σ = 1.347 S/m; ε_r = 40.458; ρ = 1000 kg/m^3
Ambient Temperature：23.2 ℃; Liquid Temperature：22.2 ℃

DASY5 Configuration:
- Probe: EX3DV4 - SN7346; ConvF(8.5, 8.5, 8.5) @ 1750 MHz; Calibrated: 2019/4/25
- Sensor-Surface: 1.4mm (Mechanical Surface Detection)
- Electronics: DAE4 Sn853; Calibrated: 2019/7/18
- Phantom: SAM_Left; Type: QD000P40CD; Serial: TP:1682
- Measurement SW: DASY52, Version 52.10 (2);SEMCAD X Version 14.6.12 (7470)

Pin=250mW/Area Scan (61x61x1): Interpolated grid: dx=1.500 mm, dy=1.500 mm
Maximum value of SAR (interpolated) = 14.6 W/kg

Pin=250mW/Zoom Scan (5x5x7)/Cube 0: Measurement grid: dx=8mm, dy=8mm, dz=5mm
Reference Value = 104.2 V/m; Power Drift = -0.12 dB
Peak SAR (extrapolated) = 18.1 W/kg
SAR(1 g) = 9.76 W/kg; SAR(10 g) = 5.17 W/kg
Maximum value of SAR (measured) = 15.2 W/kg

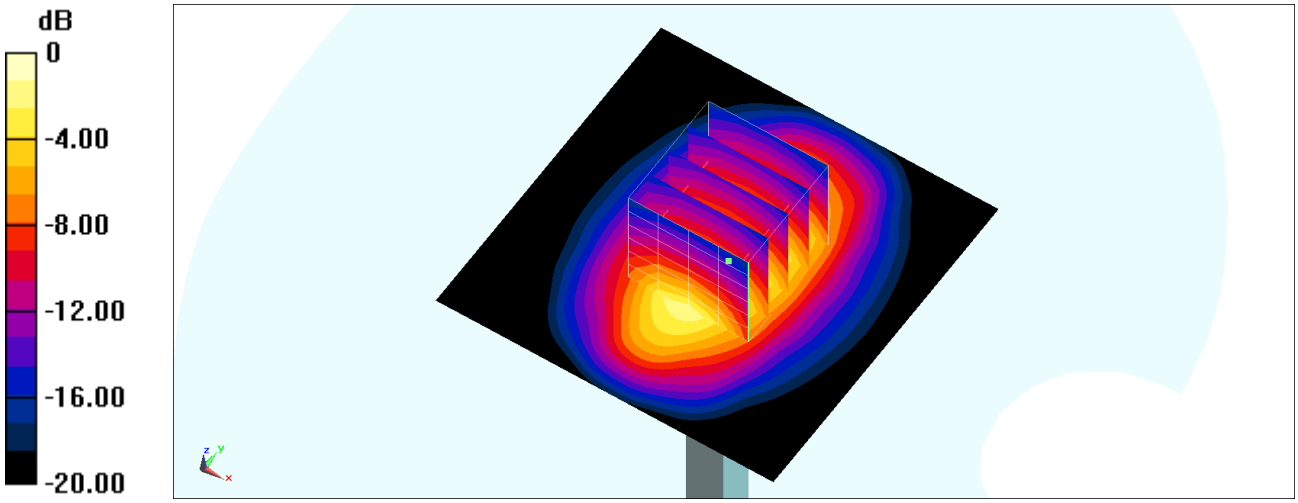

0 dB = 15.2 W/kg = 11.82 dBW/kg

System Check_Head_1750MHz

DUT: D1750V2-1112

Communication System: CW; Frequency: 1750 MHz;Duty Cycle: 1:1
Medium: HSL_1750_191030 Medium parameters used: f = 1750 MHz; σ = 1.389 S/m; ε_r = 39.608; ρ = 1000 kg/m^3
Ambient Temperature：23.2 ℃; Liquid Temperature：22.2 ℃

DASY5 Configuration:
- Probe: EX3DV4 - SN3642; ConvF(8.18, 8.18, 8.18) @ 1750 MHz; Calibrated: 2019/4/29
- Sensor-Surface: 1.4mm (Mechanical Surface Detection)
- Electronics: DAE4 Sn1311; Calibrated: 2019/8/27
- Phantom: SAM_Left; Type: QD000P40CD; Serial: TP:1477
- Measurement SW: DASY52, Version 52.10 (2);SEMCAD X Version 14.6.12 (7470)

Pin=250mW/Area Scan (61x61x1): Interpolated grid: dx=1.500 mm, dy=1.500 mm
Maximum value of SAR (interpolated) = 16.7 W/kg

Pin=250mW/Zoom Scan (5x5x7)/Cube 0: Measurement grid: dx=8mm, dy=8mm, dz=5mm
Reference Value = 113.2 V/m; Power Drift = -0.03 dB
Peak SAR (extrapolated) = 17.1 W/kg
SAR(1 g) = 9.72 W/kg; SAR(10 g) = 5.2 W/kg
Maximum value of SAR (measured) = 14.4 W/kg

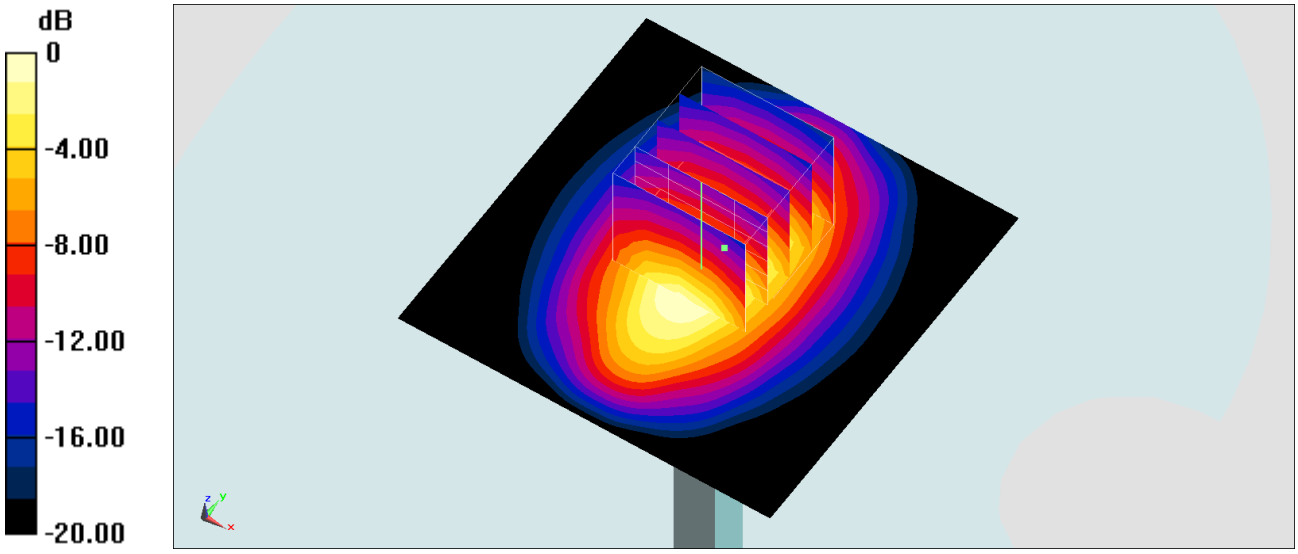

0 dB = 14.4 W/kg = 11.58 dBW/kg

System Check_Head_1750MHz

DUT: D1750V2-1112

Communication System: CW; Frequency: 1750 MHz;Duty Cycle: 1:1
Medium: HSL_1750_191103 Medium parameters used: f = 1750 MHz; σ = 1.383 S/m; ε_r = 41.198; ρ = 1000 kg/m^3
Ambient Temperature：23.6 ℃; Liquid Temperature：22.6 ℃

DASY5 Configuration:
- Probe: EX3DV4 - SN3925; ConvF(8.7, 8.7, 8.7) @ 1750 MHz; Calibrated: 2019/9/20
- Sensor-Surface: 1.4mm (Mechanical Surface Detection)
- Electronics: DAE4 Sn1311; Calibrated: 2019/8/27
- Phantom: SAM_Left; Type: QD000P40CD; Serial: TP:1477
- Measurement SW: DASY52, Version 52.10 (2);SEMCAD X Version 14.6.12 (7470)

Pin=250mW/Area Scan (61x61x1): Interpolated grid: dx=1.500 mm, dy=1.500 mm
Maximum value of SAR (interpolated) = 14.7 W/kg

Pin=250mW/Zoom Scan (5x5x7)/Cube 0: Measurement grid: dx=8mm, dy=8mm, dz=5mm
Reference Value = 103.5 V/m; Power Drift = 0.03 dB
Peak SAR (extrapolated) = 17.2 W/kg
SAR(1 g) = 9.38 W/kg; SAR(10 g) = 5 W/kg
Maximum value of SAR (measured) = 14.4 W/kg

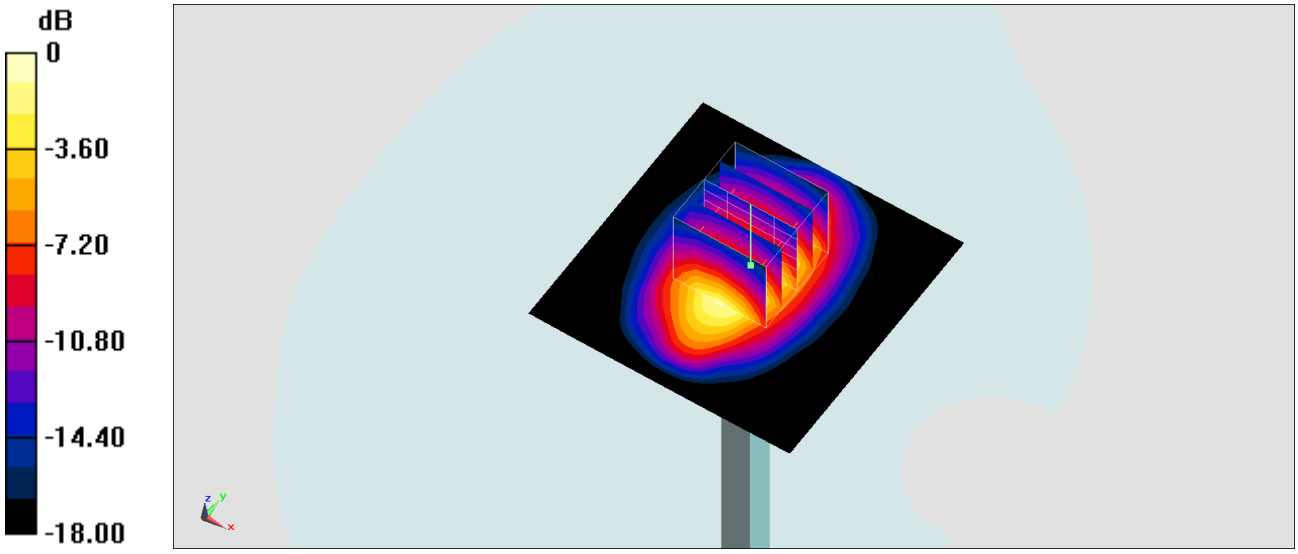

0 dB = 14.4 W/kg = 11.58 dBW/kg

System Check_Head_1900MHz

DUT: D1900V2-5d185

Communication System: CW; Frequency: 1900 MHz;Duty Cycle: 1:1
Medium: HSL_1900_191029 Medium parameters used: f = 1900 MHz; σ = 1.45 S/m; ε_r = 38.066; ρ = 1000 kg/m^3
Ambient Temperature：23.2 ℃; Liquid Temperature：22.2 ℃

DASY5 Configuration:
- Probe: EX3DV4 - SN3642; ConvF(7.91, 7.91, 7.91) @ 1900 MHz; Calibrated: 2019/4/29
- Sensor-Surface: 1.4mm (Mechanical Surface Detection)
- Electronics: DAE4 Sn1311; Calibrated: 2019/8/27
- Phantom: SAM_Left; Type: QD000P40CD; Serial: TP:1477
- Measurement SW: DASY52, Version 52.10 (2);SEMCAD X Version 14.6.12 (7470)

Pin=250mW/Area Scan (61x61x1): Interpolated grid: dx=1.500 mm, dy=1.500 mm
Maximum value of SAR (interpolated) = 17.0 W/kg

Pin=250mW/Zoom Scan (5x5x7)/Cube 0: Measurement grid: dx=8mm, dy=8mm, dz=5mm
Reference Value = 110.5 V/m; Power Drift = 0.04 dB
Peak SAR (extrapolated) = 19.7 W/kg
SAR(1 g) = 10.5 W/kg; SAR(10 g) = 5.41 W/kg
Maximum value of SAR (measured) = 16.4 W/kg

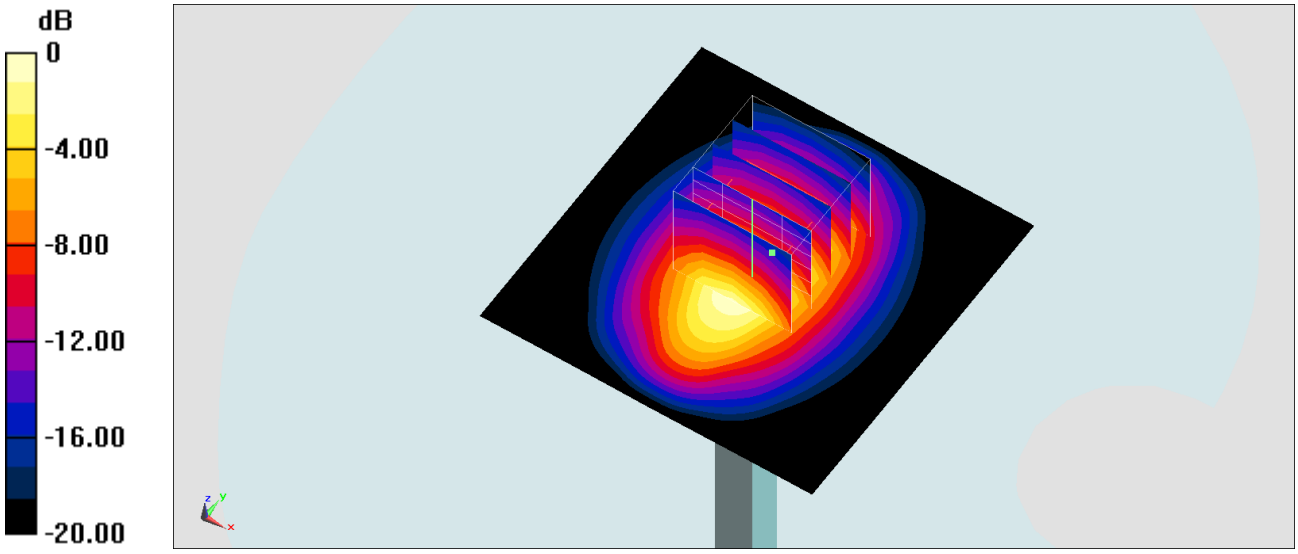

0 dB = 16.4 W/kg = 12.15 dBW/kg

System Check_Head_1900MHz

DUT: D1900V2-5d185

Communication System: CW; Frequency: 1900 MHz;Duty Cycle: 1:1
Medium: HSL_1900_191029 Medium parameters used: f = 1900 MHz; σ = 1.45 S/m; ε_r = 38.066; ρ = 1000 kg/m^3
Ambient Temperature：23.2 ℃; Liquid Temperature：22.2 ℃

DASY5 Configuration:
- Probe: EX3DV4 - SN7346; ConvF(8.07, 8.07, 8.07) @ 1900 MHz; Calibrated: 2019/4/25
- Sensor-Surface: 1.4mm (Mechanical Surface Detection)
- Electronics: DAE4 Sn853; Calibrated: 2019/7/18
- Phantom: SAM_Left; Type: QD000P40CD; Serial: TP:1682
- Measurement SW: DASY52, Version 52.10 (2);SEMCAD X Version 14.6.12 (7470)

Pin=250mW/Area Scan (61x61x1): Interpolated grid: dx=1.500 mm, dy=1.500 mm
Maximum value of SAR (interpolated) = 14.7 W/kg

Pin=250mW/Zoom Scan (5x5x7)/Cube 0: Measurement grid: dx=8mm, dy=8mm, dz=5mm
Reference Value = 102.5 V/m; Power Drift = 0.18 dB
Peak SAR (extrapolated) = 17.6 W/kg
SAR(1 g) = 9.46 W/kg; SAR(10 g) = 4.91 W/kg
Maximum value of SAR (measured) = 14.8 W/kg

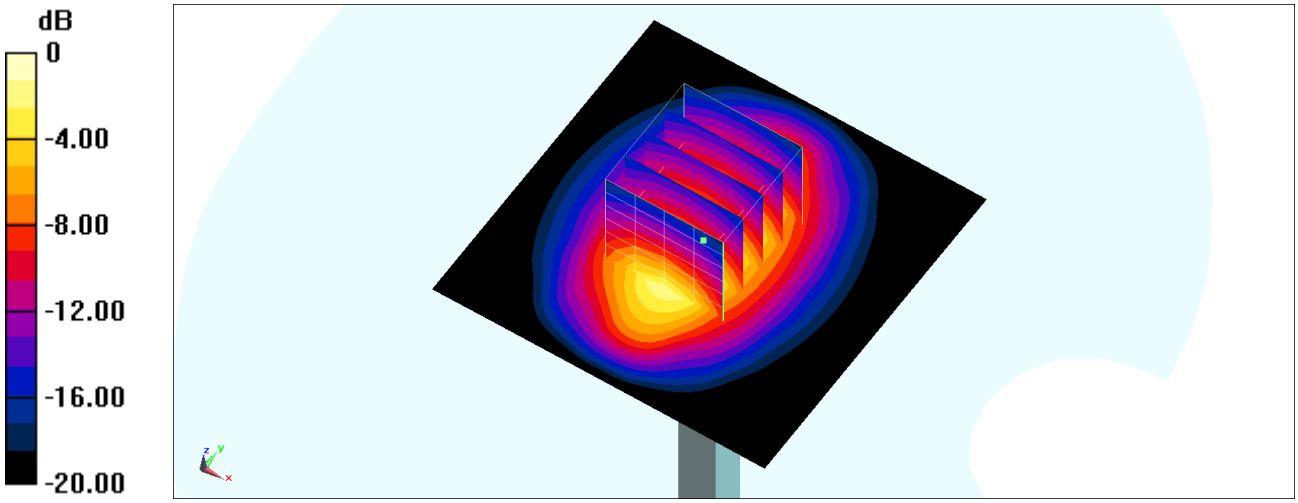

0 dB = 14.8 W/kg = 11.70 dBW/kg

System Check_Head_1900MHz

DUT: D1900V2-5d185

Communication System: CW; Frequency: 1900 MHz;Duty Cycle: 1:1
Medium: HSL_1900_191101 Medium parameters used: f = 1900 MHz; σ = 1.388 S/m; ε_r = 38.629; ρ = 1000 kg/m^3
Ambient Temperature：23.5 ℃; Liquid Temperature：22.5 ℃

DASY5 Configuration:
- Probe: EX3DV4 - SN3642; ConvF(7.91, 7.91, 7.91) @ 1900 MHz; Calibrated: 2019/4/29
- Sensor-Surface: 1.4mm (Mechanical Surface Detection)
- Electronics: DAE4 Sn1311; Calibrated: 2019/8/27
- Phantom: SAM_Left; Type: QD000P40CD; Serial: TP:1477
- Measurement SW: DASY52, Version 52.10 (2);SEMCAD X Version 14.6.12 (7470)

Pin=250mW/Area Scan (61x61x1): Interpolated grid: dx=1.500 mm, dy=1.500 mm
Maximum value of SAR (interpolated) = 17.3 W/kg

Pin=250mW/Zoom Scan (5x5x7)/Cube 0: Measurement grid: dx=8mm, dy=8mm, dz=5mm
Reference Value = 110.9 V/m; Power Drift = -0.11 dB
Peak SAR (extrapolated) = 19.3 W/kg
SAR(1 g) = 10.4 W/kg; SAR(10 g) = 5.34 W/kg
Maximum value of SAR (measured) = 15.9 W/kg

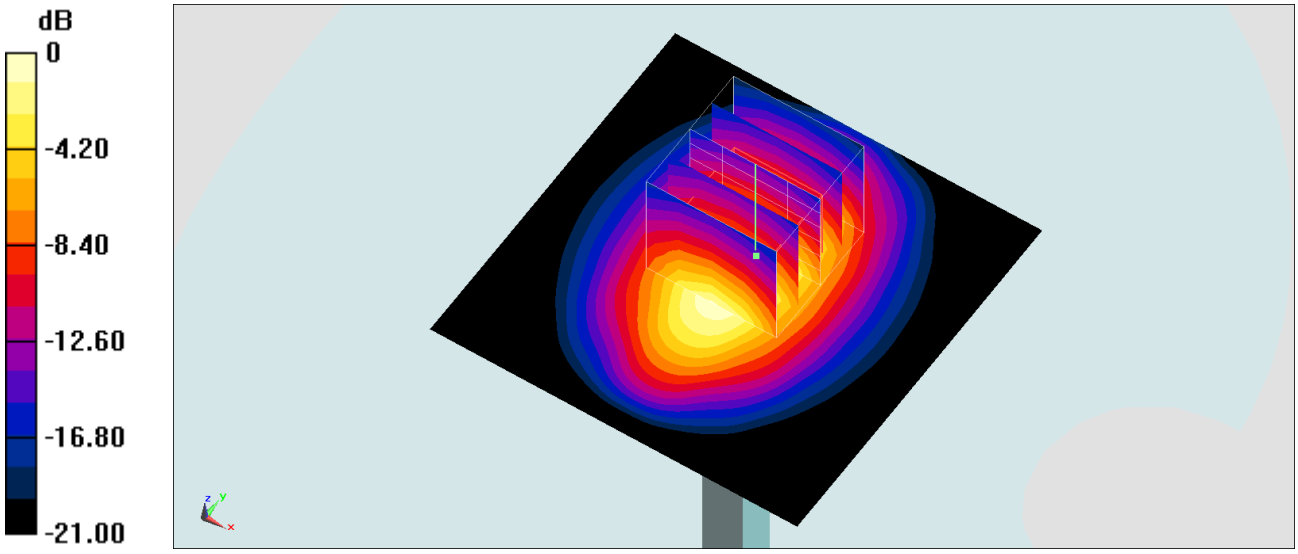

0 dB = 15.9 W/kg = 12.01 dBW/kg

System Check_Head_1900MHz

DUT: D1900V2-5d185

Communication System: CW; Frequency: 1900 MHz;Duty Cycle: 1:1
Medium: HSL_1900_191103 Medium parameters used: f = 1900 MHz; σ = 1.408 S/m; ε_r = 40.718; ρ = 1000 kg/m^3
Ambient Temperature：23.9 ℃; Liquid Temperature：22.9 ℃

DASY5 Configuration:
- Probe: EX3DV4 - SN3925; ConvF(8.35, 8.35, 8.35) @ 1900 MHz; Calibrated: 2019/9/20
- Sensor-Surface: 1.4mm (Mechanical Surface Detection)
- Electronics: DAE4 Sn1311; Calibrated: 2019/8/27
- Phantom: SAM_Left; Type: QD000P40CD; Serial: TP:1477
- Measurement SW: DASY52, Version 52.10 (2);SEMCAD X Version 14.6.12 (7470)

Pin=250mW/Area Scan (61x61x1): Interpolated grid: dx=1.500 mm, dy=1.500 mm
Maximum value of SAR (interpolated) = 16.0 W/kg

Pin=250mW/Zoom Scan (5x5x7)/Cube 0: Measurement grid: dx=8mm, dy=8mm, dz=5mm
Reference Value = 102.4 V/m; Power Drift = -0.12 dB
Peak SAR (extrapolated) = 19.8 W/kg
SAR(1 g) = 10.4 W/kg; SAR(10 g) = 5.31 W/kg
Maximum value of SAR (measured) = 16.5 W/kg

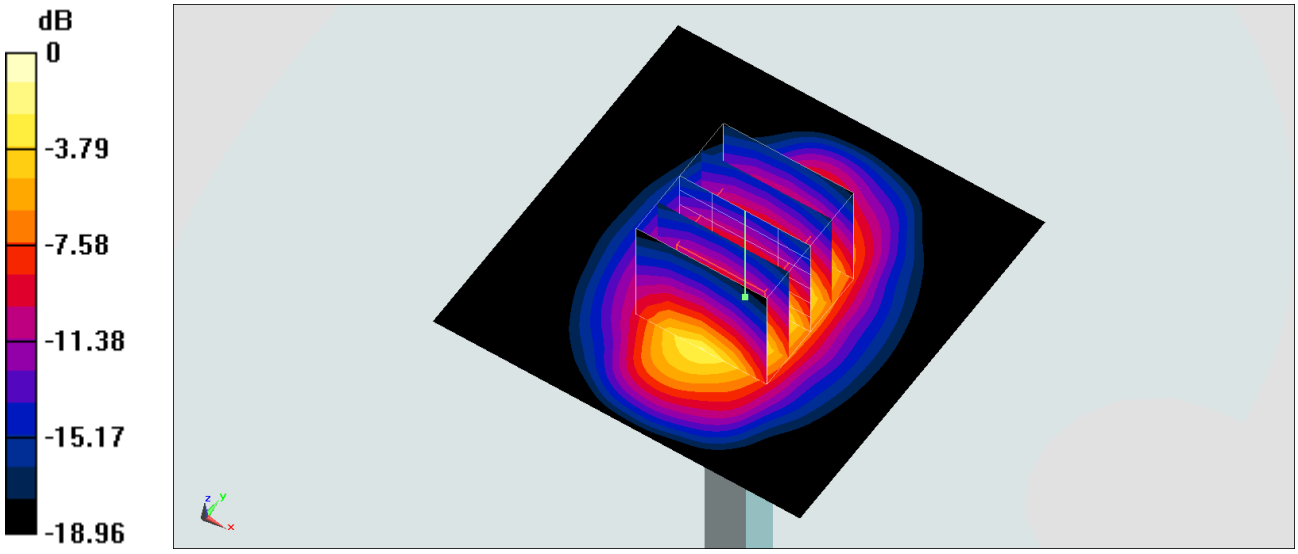

0 dB = 16.5 W/kg = 12.17 dBW/kg

System Check_Head_1900MHz

DUT: D1900V2-5d185

Communication System: CW; Frequency: 1900 MHz;Duty Cycle: 1:1
Medium: HSL_1900_191106 Medium parameters used: f = 1900 MHz; σ = 1.417 S/m; ε_r = 40.819; ρ = 1000 kg/m^3
Ambient Temperature：23.5 ℃; Liquid Temperature：22.5 ℃

DASY5 Configuration:
- Probe: EX3DV4 - SN3925; ConvF(8.35, 8.35, 8.35) @ 1900 MHz; Calibrated: 2019/9/20
- Sensor-Surface: 1.4mm (Mechanical Surface Detection)
- Electronics: DAE4 Sn1311; Calibrated: 2019/8/27
- Phantom: SAM_Left; Type: QD000P40CD; Serial: TP:1477
- Measurement SW: DASY52, Version 52.10 (2);SEMCAD X Version 14.6.12 (7470)

Pin=250mW/Area Scan (61x61x1): Interpolated grid: dx=1.500 mm, dy=1.500 mm
Maximum value of SAR (interpolated) = 14.1 W/kg

Pin=250mW/Zoom Scan (5x5x7)/Cube 0: Measurement grid: dx=8mm, dy=8mm, dz=5mm
Reference Value = 102.1 V/m; Power Drift = 0.06 dB
Peak SAR (extrapolated) = 16.8 W/kg
SAR(1 g) = 9.13 W/kg; SAR(10 g) = 4.74 W/kg
Maximum value of SAR (measured) = 14.2 W/kg

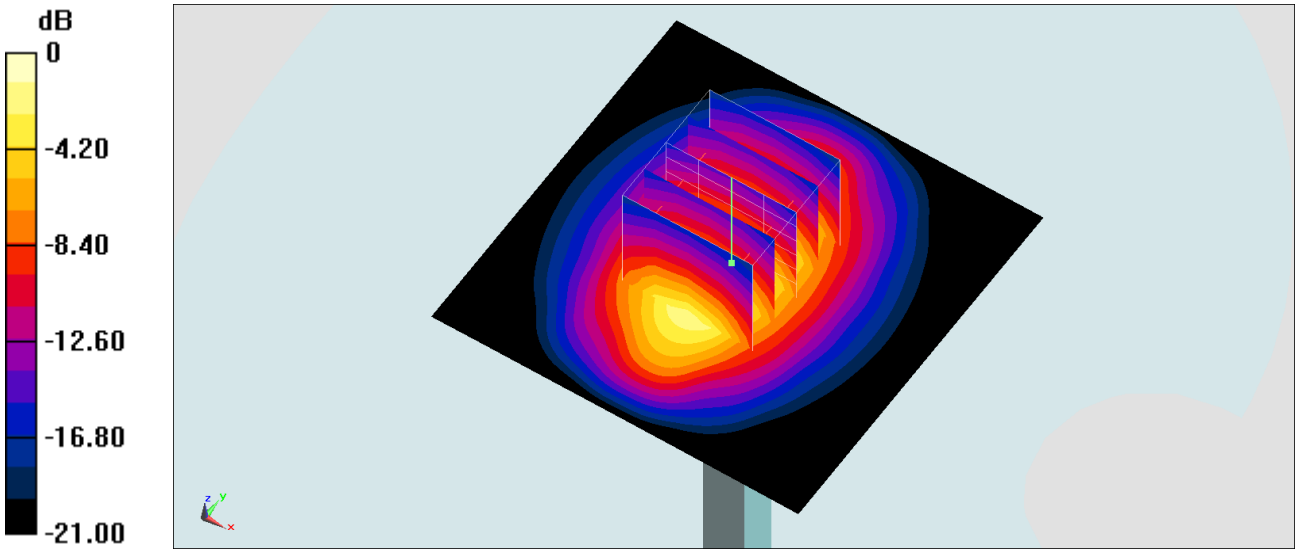

0 dB = 14.2 W/kg = 11.52 dBW/kg

System Check_Head_2450MHz

DUT: D2450V2-929

Communication System: CW; Frequency: 2450 MHz;Duty Cycle: 1:1
Medium: HSL_2450_191028 Medium parameters used: f = 2450 MHz; σ = 1.785 S/m; ε_r = 38.405; ρ = 1000 kg/m^3
Ambient Temperature：23.7 ℃; Liquid Temperature：22.7 ℃

DASY5 Configuration:
- Probe: ES3DV3 - SN3124; ConvF(4.49, 4.49, 4.49) @ 2450 MHz; Calibrated: 2019/1/15
- Sensor-Surface: 3mm (Mechanical Surface Detection)
- Electronics: DAE4 Sn316; Calibrated: 2019/1/3
- Phantom: SAM_Left; Type: QD000P40CD; Serial: TP:1684
- Measurement SW: DASY52, Version 52.10 (2);SEMCAD X Version 14.6.12 (7470)

Pin=250mW/Area Scan (61x61x1): Interpolated grid: dx=1.200 mm, dy=1.200 mm
Maximum value of SAR (interpolated) = 17.0 W/kg

Pin=250mW/Zoom Scan (7x7x7)/Cube 0: Measurement grid: dx=5mm, dy=5mm, dz=5mm
Reference Value = 100.2 V/m; Power Drift = -0.11 dB
Peak SAR (extrapolated) = 25.7 W/kg
SAR(1 g) = 12.3 W/kg; SAR(10 g) = 5.67 W/kg
Maximum value of SAR (measured) = 16.0 W/kg

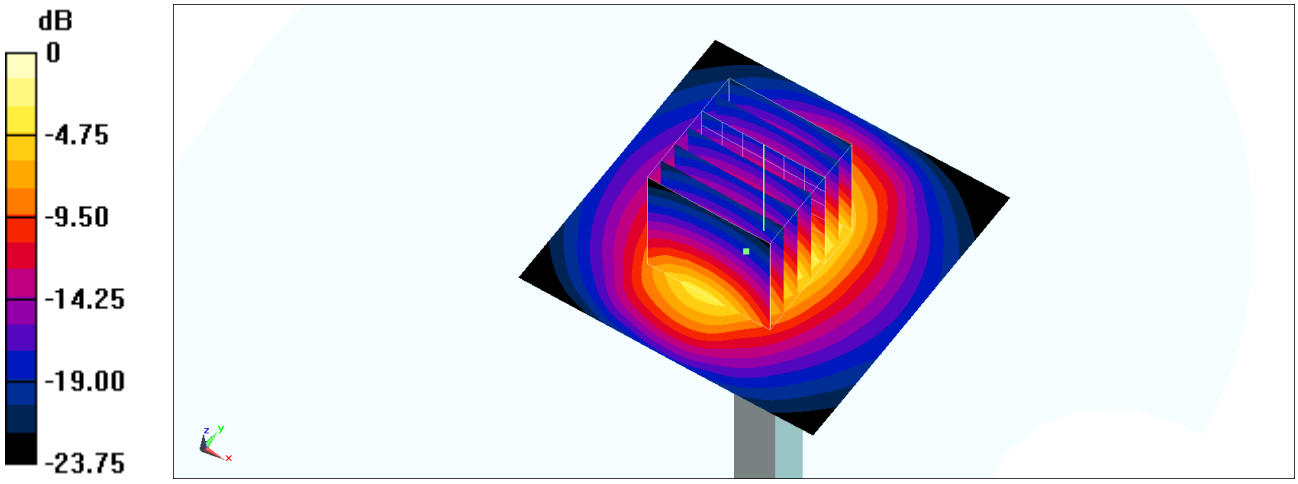

0 dB = 16.0 W/kg = 12.04 dBW/kg

System Check_Head_2450MHz

DUT: D2450V2-929

Communication System: CW; Frequency: 2450 MHz;Duty Cycle: 1:1
Medium: HSL_2450_191029 Medium parameters used: f = 2450 MHz; σ = 1.801 S/m; ε_r = 38.465; ρ = 1000 kg/m^3
Ambient Temperature：23.6 ℃; Liquid Temperature：22.6 ℃

DASY5 Configuration:
- Probe: ES3DV3 - SN3124; ConvF(4.49, 4.49, 4.49) @ 2450 MHz; Calibrated: 2019/1/15
- Sensor-Surface: 3mm (Mechanical Surface Detection)
- Electronics: DAE4 Sn316; Calibrated: 2019/1/3
- Phantom: SAM_Left; Type: QD000P40CD; Serial: TP:1684
- Measurement SW: DASY52, Version 52.10 (2);SEMCAD X Version 14.6.12 (7470)

Pin=250mW/Area Scan (61x61x1): Interpolated grid: dx=1.200 mm, dy=1.200 mm
Maximum value of SAR (interpolated) = 16.6 W/kg

Pin=250mW/Zoom Scan (7x7x7)/Cube 0: Measurement grid: dx=5mm, dy=5mm, dz=5mm
Reference Value = 95.64 V/m; Power Drift = -0.02 dB
Peak SAR (extrapolated) = 24.5 W/kg
SAR(1 g) = 12 W/kg; SAR(10 g) = 5.61 W/kg
Maximum value of SAR (measured) = 15.7 W/kg

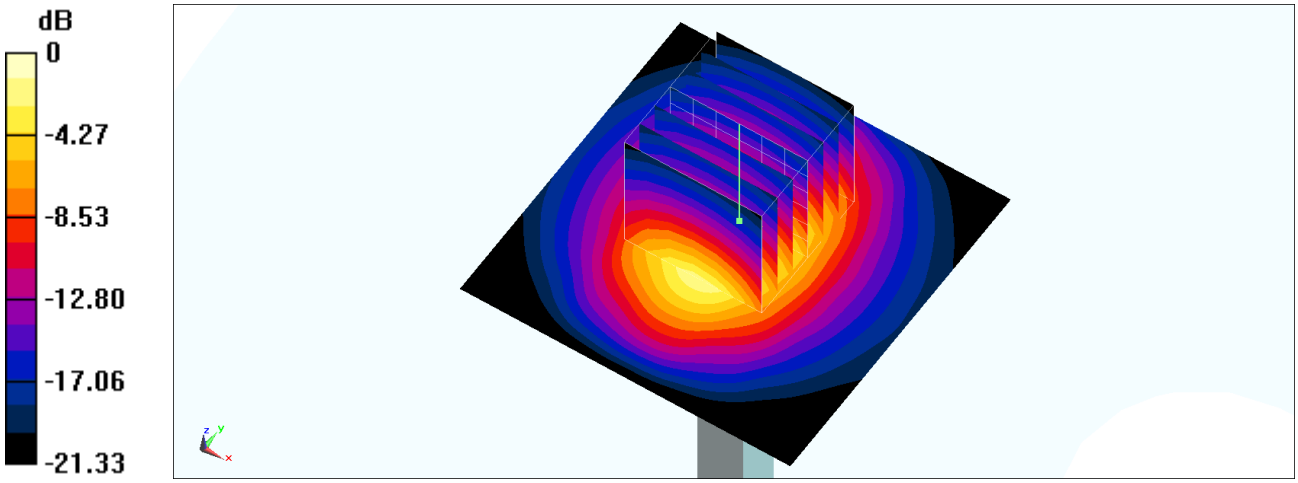

0 dB = 15.7 W/kg = 11.96 dBW/kg

System Check_Head_2600MHz

DUT: D2600V2-1078

Communication System: CW; Frequency: 2600 MHz;Duty Cycle: 1:1
Medium: HSL_2600_191101 Medium parameters used: f = 2600 MHz; σ = 1.963 S/m; ε_r = 38.136; ρ = 1000 kg/m^3
Ambient Temperature：23.5 ℃; Liquid Temperature：22.5 ℃

DASY5 Configuration:
- Probe: EX3DV4 - SN3642; ConvF(7.14, 7.14, 7.14) @ 2600 MHz; Calibrated: 2019/4/29
- Sensor-Surface: 1.4mm (Mechanical Surface Detection)
- Electronics: DAE4 Sn1311; Calibrated: 2019/8/27
- Phantom: SAM_Left; Type: QD000P40CD; Serial: TP:1477
- Measurement SW: DASY52, Version 52.10 (2);SEMCAD X Version 14.6.12 (7470)

Pin=250mW/Area Scan (71x71x1): Interpolated grid: dx=1.200 mm, dy=1.200 mm
Maximum value of SAR (interpolated) = 21.1 W/kg

Pin=250mW/Zoom Scan (7x7x7)/Cube 0: Measurement grid: dx=5mm, dy=5mm, dz=5mm
Reference Value = 113.3 V/m; Power Drift = -0.11 dB
Peak SAR (extrapolated) = 29.3 W/kg
SAR(1 g) = 14.1 W/kg; SAR(10 g) = 6.47 W/kg
Maximum value of SAR (measured) = 23.7 W/kg

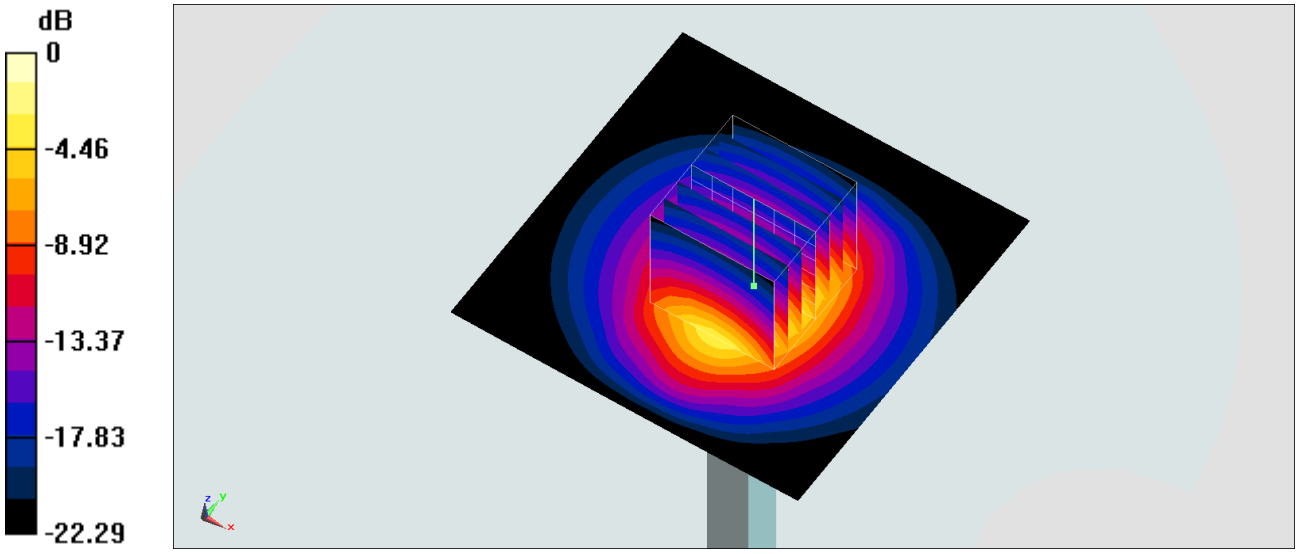

0 dB = 23.7 W/kg = 13.75 dBW/kg

System Check_Head_2600MHz

DUT: D2600V2-1078

Communication System: CW; Frequency: 2600 MHz;Duty Cycle: 1:1
Medium: HSL_2600_191104 Medium parameters used: f = 2600 MHz; σ = 1.91 S/m; ε_r = 37.746; ρ = 1000 kg/m^3
Ambient Temperature：23.7 ℃; Liquid Temperature：22.7 ℃

DASY5 Configuration:
- Probe: EX3DV4 - SN3925; ConvF(7.5, 7.5, 7.5) @ 2600 MHz; Calibrated: 2019/9/20
- Sensor-Surface: 1.4mm (Mechanical Surface Detection)
- Electronics: DAE4 Sn1311; Calibrated: 2019/8/27
- Phantom: SAM_Left; Type: QD000P40CD; Serial: TP:1477
- Measurement SW: DASY52, Version 52.10 (2);SEMCAD X Version 14.6.12 (7470)

Pin=250mW/Area Scan (71x71x1): Interpolated grid: dx=1.200 mm, dy=1.200 mm
Maximum value of SAR (interpolated) = 25.0 W/kg

Pin=250mW/Zoom Scan (7x7x7)/Cube 0: Measurement grid: dx=5mm, dy=5mm, dz=5mm
Reference Value = 115.7 V/m; Power Drift = 0.09 dB
Peak SAR (extrapolated) = 30.9 W/kg
SAR(1 g) = 14.3 W/kg; SAR(10 g) = 6.39 W/kg
Maximum value of SAR (measured) = 24.7 W/kg

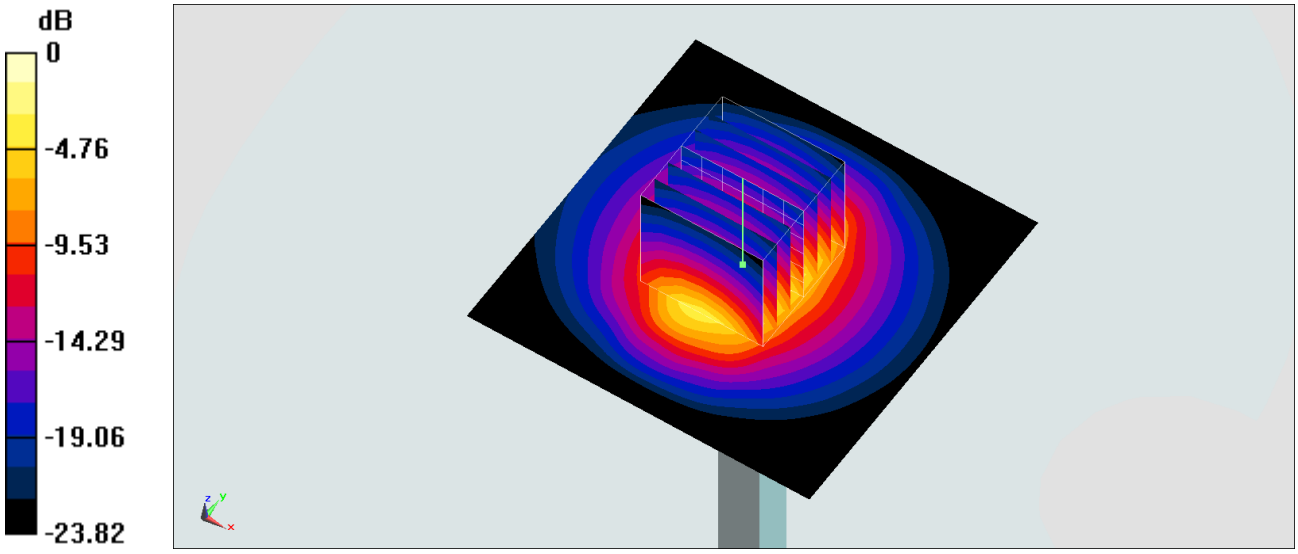

0 dB = 24.7 W/kg = 13.93 dBW/kg

System Check_Head_2600MHz

DUT: D2600V2-1078

Communication System: CW; Frequency: 2600 MHz;Duty Cycle: 1:1
Medium: HSL_2600_191106 Medium parameters used: f = 2600 MHz; σ = 1.975 S/m; ε_r = 38.59; ρ = 1000 kg/m^3
Ambient Temperature：23.5 ℃; Liquid Temperature：22.5 ℃

DASY5 Configuration:
- Probe: EX3DV4 - SN3925; ConvF(7.5, 7.5, 7.5) @ 2600 MHz; Calibrated: 2019/9/20
- Sensor-Surface: 1.4mm (Mechanical Surface Detection)
- Electronics: DAE4 Sn1311; Calibrated: 2019/8/27
- Phantom: SAM_Left; Type: QD000P40CD; Serial: TP:1477
- Measurement SW: DASY52, Version 52.10 (2);SEMCAD X Version 14.6.12 (7470)

Pin=250mW/Area Scan (71x71x1): Interpolated grid: dx=1.200 mm, dy=1.200 mm
Maximum value of SAR (interpolated) = 24.0 W/kg

Pin=250mW/Zoom Scan (7x7x7)/Cube 0: Measurement grid: dx=5mm, dy=5mm, dz=5mm
Reference Value = 113.4 V/m; Power Drift = -0.03 dB
Peak SAR (extrapolated) = 30.8 W/kg
SAR(1 g) = 13.5 W/kg; SAR(10 g) = 5.88 W/kg
Maximum value of SAR (measured) = 24.0 W/kg

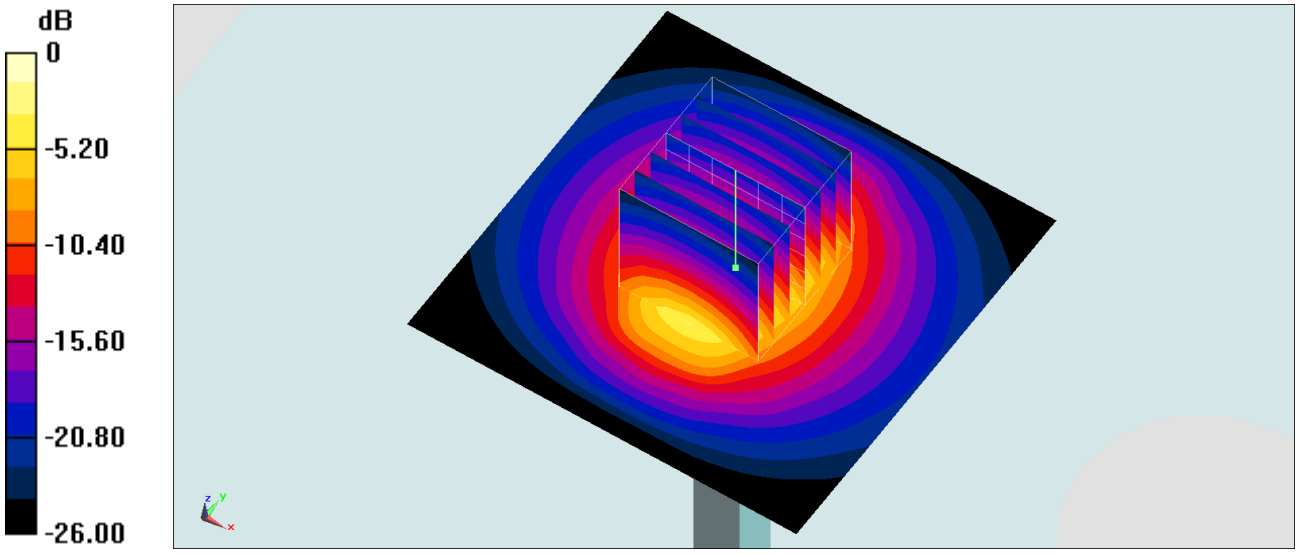

0 dB = 24.0 W/kg = 13.80 dBW/kg

System Check_Head_5250MHz

DUT: D5GHzV2-1006

Communication System: CW; Frequency: 5250 MHz;Duty Cycle: 1:1
Medium: HSL_5G_191028 Medium parameters used : f = 5250 MHz; σ = 4.611 S/m; ε_r = 36.305; ρ = 1000 kg/m^3
Ambient Temperature：23.6 ℃; Liquid Temperature：22.6 ℃

DASY5 Configuration:
- Probe: EX3DV4 - SN7346; ConvF(5.36, 5.36, 5.36) @ 5250 MHz; Calibrated: 2019/4/25
- Sensor-Surface: 1.4mm (Mechanical Surface Detection)
- Electronics: DAE4 Sn853; Calibrated: 2019/7/18
- Phantom: SAM_Right; Type: SAM; Serial: TP:1681
- Measurement SW: DASY52, Version 52.10 (2);SEMCAD X Version 14.6.12 (7470)

Pin=100mW/Area Scan (71x71x1): Interpolated grid: dx=1.000 mm, dy=1.000 mm
Maximum value of SAR (interpolated) = 19.3 W/kg

Pin=100mW/Zoom Scan (7x7x7)/Cube 0: Measurement grid: dx=4mm, dy=4mm, dz=1.4mm
Reference Value = 70.36 V/m; Power Drift = 0.05 dB
Peak SAR (extrapolated) = 34.1 W/kg
SAR(1 g) = 7.88 W/kg; SAR(10 g) = 2.18 W/kg
Maximum value of SAR (measured) = 19.5 W/kg

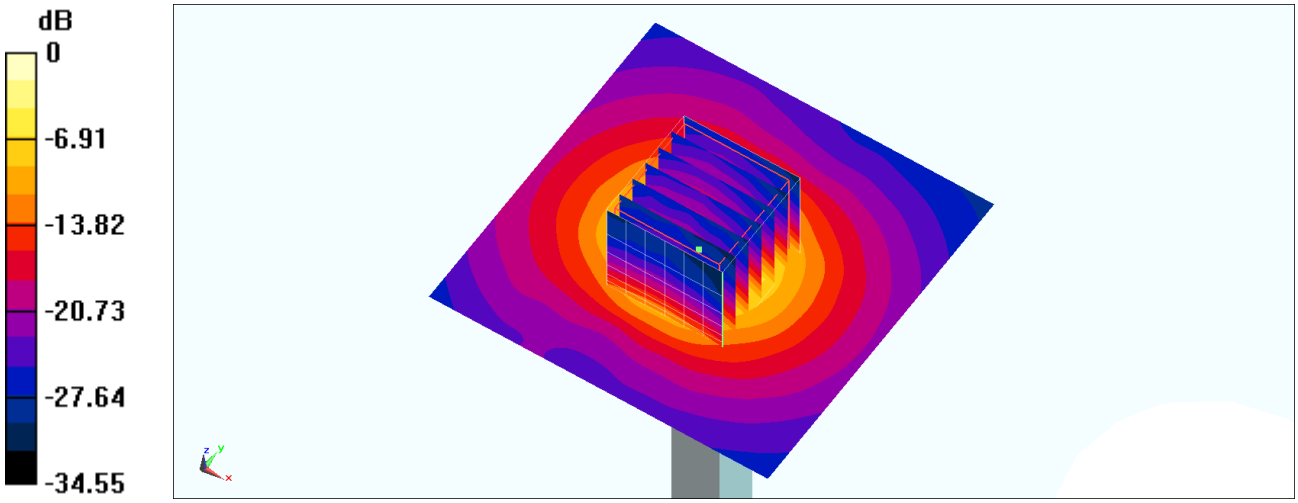

0 dB = 19.5 W/kg = 12.90 dBW/kg

System Check_Head_5250MHz

DUT: D5GHzV2-1006

Communication System: CW; Frequency: 5250 MHz;Duty Cycle: 1:1
Medium: HSL_5G_191029 Medium parameters used: f = 5250 MHz; σ = 4.607 S/m; ε_r = 36.316; ρ = 1000 kg/m^3
Ambient Temperature：23.5 ℃; Liquid Temperature：22.5 ℃

DASY5 Configuration:
- Probe: EX3DV4 - SN7346; ConvF(5.36, 5.36, 5.36) @ 5250 MHz; Calibrated: 2019/4/25
- Sensor-Surface: 1.4mm (Mechanical Surface Detection)
- Electronics: DAE4 Sn853; Calibrated: 2019/7/18
- Phantom: SAM_Right; Type: SAM; Serial: TP:1681
- Measurement SW: DASY52, Version 52.10 (2);SEMCAD X Version 14.6.12 (7470)

Pin=100mW/Area Scan (71x71x1): Interpolated grid: dx=1.000 mm, dy=1.000 mm
Maximum value of SAR (interpolated) = 19.3 W/kg

Pin=100mW/Zoom Scan (7x7x7)/Cube 0: Measurement grid: dx=4mm, dy=4mm, dz=1.4mm
Reference Value = 70.36 V/m; Power Drift = 0.08 dB
Peak SAR (extrapolated) = 34.0 W/kg
SAR(1 g) = 7.87 W/kg; SAR(10 g) = 2.18 W/kg
Maximum value of SAR (measured) = 19.5 W/kg

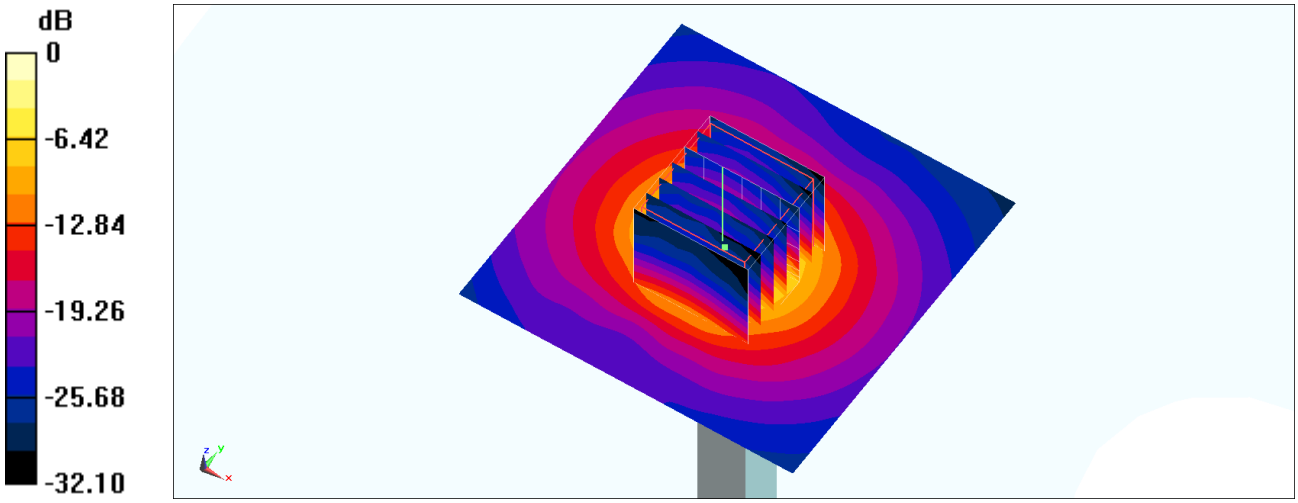

0 dB = 19.5 W/kg = 12.90 dBW/kg

System Check_Head_5250MHz

DUT: D5GHzV2-1006

Communication System: CW; Frequency: 5250 MHz;Duty Cycle: 1:1
Medium: HSL_5G_191101 Medium parameters used: f = 5250 MHz; σ = 4.61 S/m; ε_r = 36.365; ρ = 1000 kg/m^3
Ambient Temperature：23.7 ℃; Liquid Temperature：22.7 ℃

DASY5 Configuration:
- Probe: EX3DV4 - SN7346; ConvF(5.36, 5.36, 5.36) @ 5250 MHz; Calibrated: 2019/4/25
- Sensor-Surface: 1.4mm (Mechanical Surface Detection)
- Electronics: DAE4 Sn853; Calibrated: 2019/7/18
- Phantom: SAM_Right; Type: SAM; Serial: TP:1681
- Measurement SW: DASY52, Version 52.10 (2);SEMCAD X Version 14.6.12 (7470)

Pin=100mW/Area Scan (71x71x1): Interpolated grid: dx=1.000 mm, dy=1.000 mm
Maximum value of SAR (interpolated) = 17.0 W/kg

Pin=100mW/Zoom Scan (7x7x7)/Cube 0: Measurement grid: dx=4mm, dy=4mm, dz=1.4mm
Reference Value = 67.93 V/m; Power Drift = 0.18 dB
Peak SAR (extrapolated) = 32.1 W/kg
SAR(1 g) = 8.13 W/kg; SAR(10 g) = 2.31 W/kg
Maximum value of SAR (measured) = 20.0 W/kg

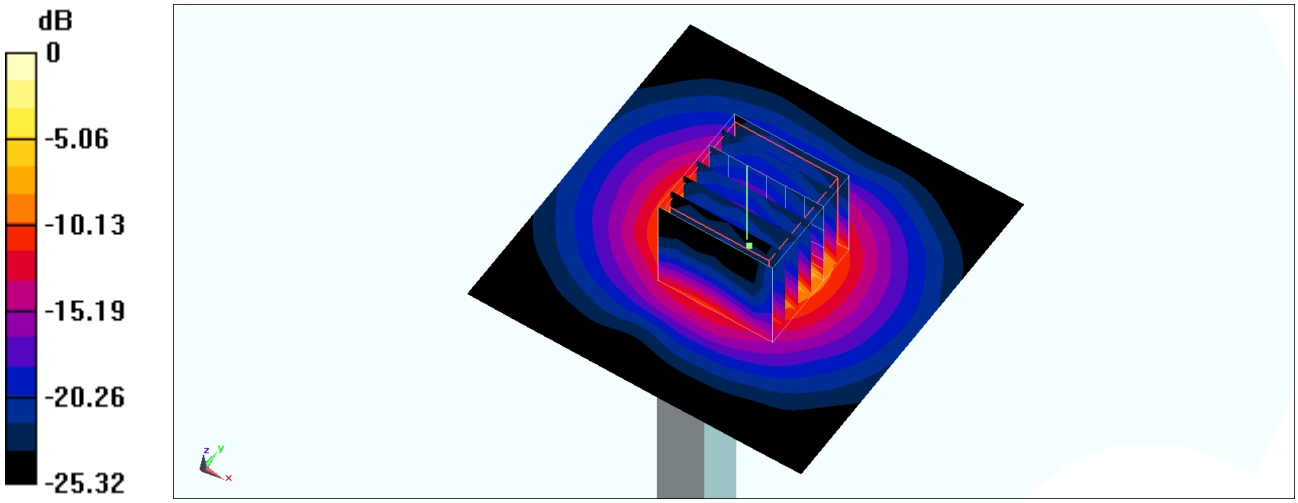

0 dB = 20.0 W/kg = 13.01 dBW/kg

System Check_Head_5600MHz

DUT: D5GHzV2-1006

Communication System: CW; Frequency: 5600 MHz;Duty Cycle: 1:1
Medium: HSL_5G_191028 Medium parameters used: f = 5600 MHz; σ = 4.97 S/m; ε_r = 35.823; ρ = 1000 kg/m^3
Ambient Temperature：23.6 ℃; Liquid Temperature：22.6 ℃

DASY5 Configuration:
- Probe: EX3DV4 - SN7346; ConvF(4.75, 4.75, 4.75) @ 5600 MHz; Calibrated: 2019/4/25
- Sensor-Surface: 1.4mm (Mechanical Surface Detection)
- Electronics: DAE4 Sn853; Calibrated: 2019/7/18
- Phantom: SAM_Right; Type: SAM; Serial: TP:1681
- Measurement SW: DASY52, Version 52.10 (2);SEMCAD X Version 14.6.12 (7470)

Pin=100mW/Area Scan (71x71x1): Interpolated grid: dx=1.000 mm, dy=1.000 mm
Maximum value of SAR (interpolated) = 20.7 W/kg

Pin=100mW/Zoom Scan (7x7x7)/Cube 0: Measurement grid: dx=4mm, dy=4mm, dz=1.4mm
Reference Value = 71.22 V/m; Power Drift = -0.09 dB
Peak SAR (extrapolated) = 33.9 W/kg
SAR(1 g) = 8.2 W/kg; SAR(10 g) = 2.37 W/kg
Maximum value of SAR (measured) = 21.1 W/kg

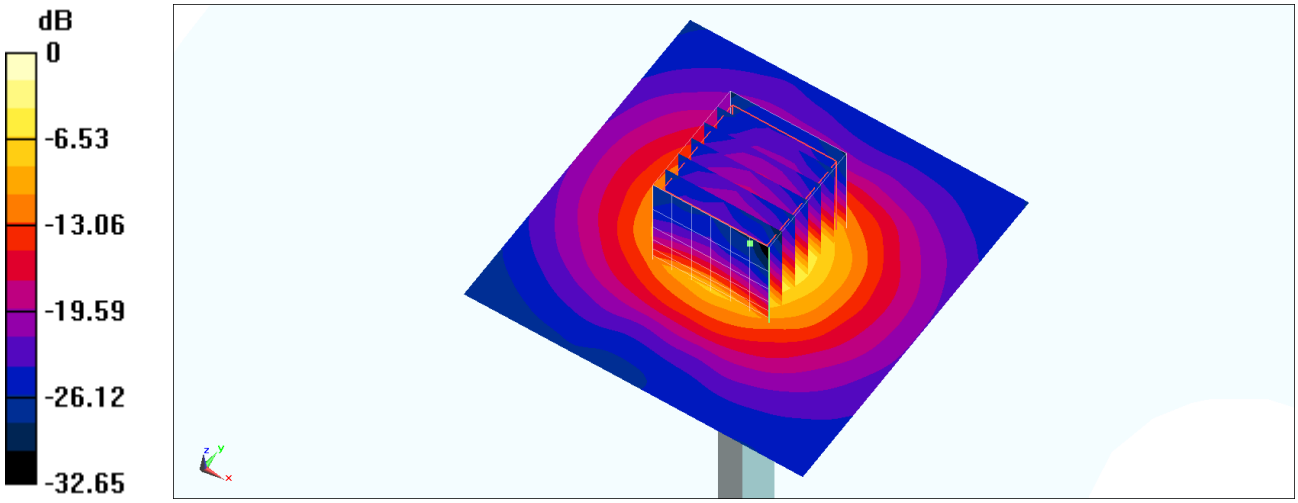

0 dB = 21.1 W/kg = 13.24 dBW/kg

System Check_Head_5600MHz

DUT: D5GHzV2-1006

Communication System: CW; Frequency: 5600 MHz;Duty Cycle: 1:1
Medium: HSL_5G_191029 Medium parameters used: f = 5600 MHz; σ = 4.966 S/m; ε_r = 35.834; ρ = 1000 kg/m^3
Ambient Temperature：23.5 ℃; Liquid Temperature：22.5 ℃

DASY5 Configuration:
- Probe: EX3DV4 - SN7346; ConvF(4.75, 4.75, 4.75) @ 5600 MHz; Calibrated: 2019/4/25
- Sensor-Surface: 1.4mm (Mechanical Surface Detection)
- Electronics: DAE4 Sn853; Calibrated: 2019/7/18
- Phantom: SAM_Right; Type: SAM; Serial: TP:1681
- Measurement SW: DASY52, Version 52.10 (2);SEMCAD X Version 14.6.12 (7470)

Pin=100mW/Area Scan (71x71x1): Interpolated grid: dx=1.000 mm, dy=1.000 mm
Maximum value of SAR (interpolated) = 20.7 W/kg

Pin=100mW/Zoom Scan (7x7x7)/Cube 0: Measurement grid: dx=4mm, dy=4mm, dz=1.4mm
Reference Value = 71.22 V/m; Power Drift = -0.19 dB
Peak SAR (extrapolated) = 33.9 W/kg
SAR(1 g) = 8.19 W/kg; SAR(10 g) = 2.36 W/kg
Maximum value of SAR (measured) = 21.1 W/kg

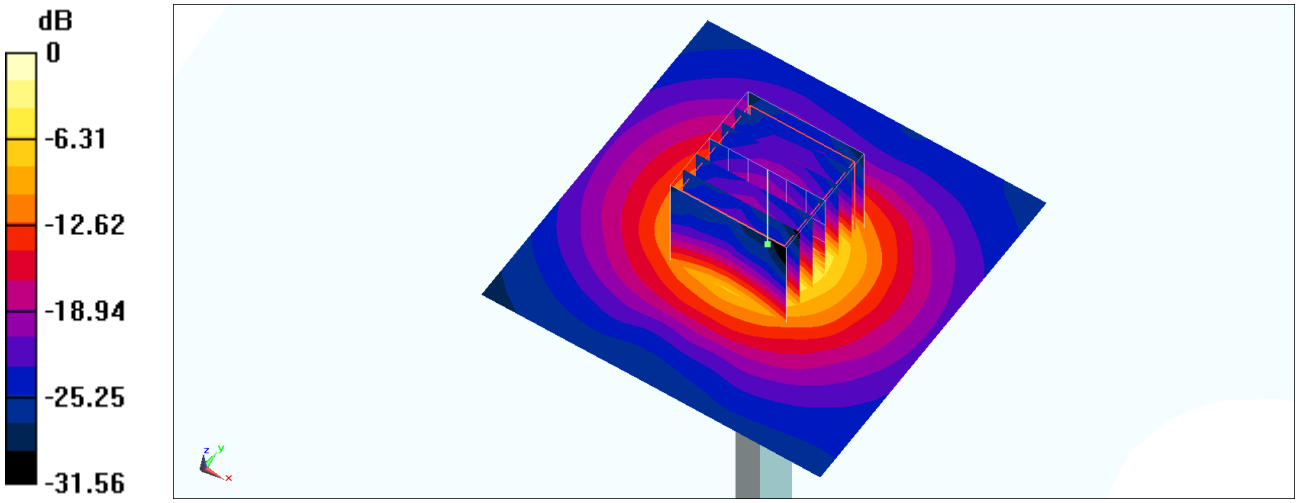

0 dB = 21.1 W/kg = 13.24 dBW/kg

System Check_Head_5600MHz

DUT: D5GHzV2-1006

Communication System: CW; Frequency: 5600 MHz;Duty Cycle: 1:1
Medium: HSL_5G_191101 Medium parameters used: f = 5600 MHz; σ = 4.968 S/m; ε_r = 35.883; ρ = 1000 kg/m^3
Ambient Temperature：23.7 ℃; Liquid Temperature：22.7 ℃

DASY5 Configuration:
- Probe: EX3DV4 - SN7346; ConvF(4.75, 4.75, 4.75) @ 5600 MHz; Calibrated: 2019/4/25
- Sensor-Surface: 1.4mm (Mechanical Surface Detection)
- Electronics: DAE4 Sn853; Calibrated: 2019/7/18
- Phantom: SAM_Right; Type: SAM; Serial: TP:1681
- Measurement SW: DASY52, Version 52.10 (2);SEMCAD X Version 14.6.12 (7470)

Pin=100mW/Area Scan (71x71x1): Interpolated grid: dx=1.000 mm, dy=1.000 mm
Maximum value of SAR (interpolated) = 20.7 W/kg

Pin=100mW/Zoom Scan (7x7x7)/Cube 0: Measurement grid: dx=4mm, dy=4mm, dz=1.4mm
Reference Value = 71.22 V/m; Power Drift = -0.19 dB
Peak SAR (extrapolated) = 33.9 W/kg
SAR(1 g) = 8.2 W/kg; SAR(10 g) = 2.37 W/kg
Maximum value of SAR (measured) = 21.1 W/kg

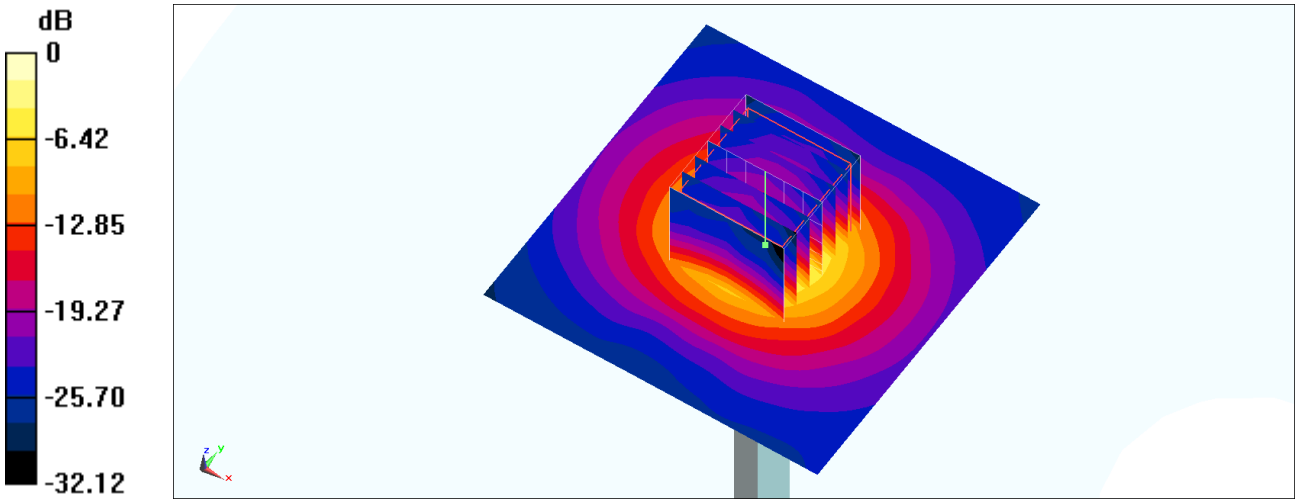

0 dB = 21.1 W/kg = 13.24 dBW/kg

System Check_Head_5750MHz

DUT: D5GHzV2-1006

Communication System: CW; Frequency: 5750 MHz;Duty Cycle: 1:1
Medium: HSL_5G_191029 Medium parameters used: f = 5750 MHz; σ = 5.116 S/m; ε_r = 35.558; ρ = 1000 kg/m^3
Ambient Temperature：23.5 ℃; Liquid Temperature：22.5 ℃

DASY5 Configuration:
- Probe: EX3DV4 - SN7346; ConvF(4.78, 4.78, 4.78) @ 5750 MHz; Calibrated: 2019/4/25
- Sensor-Surface: 1.4mm (Mechanical Surface Detection)
- Electronics: DAE4 Sn853; Calibrated: 2019/7/18
- Phantom: SAM_Right; Type: SAM; Serial: TP:1681
- Measurement SW: DASY52, Version 52.10 (2);SEMCAD X Version 14.6.12 (7470)

Pin=100mW/Area Scan (71x71x1): Interpolated grid: dx=1.000 mm, dy=1.000 mm
Maximum value of SAR (interpolated) = 19.4 W/kg

Pin=100mW/Zoom Scan (7x7x7)/Cube 0: Measurement grid: dx=4mm, dy=4mm, dz=1.4mm
Reference Value = 70.29 V/m; Power Drift = -0.05 dB
Peak SAR (extrapolated) = 36.7 W/kg
SAR(1 g) = 7.82 W/kg; SAR(10 g) = 2.24 W/kg
Maximum value of SAR (measured) = 20.8 W/kg

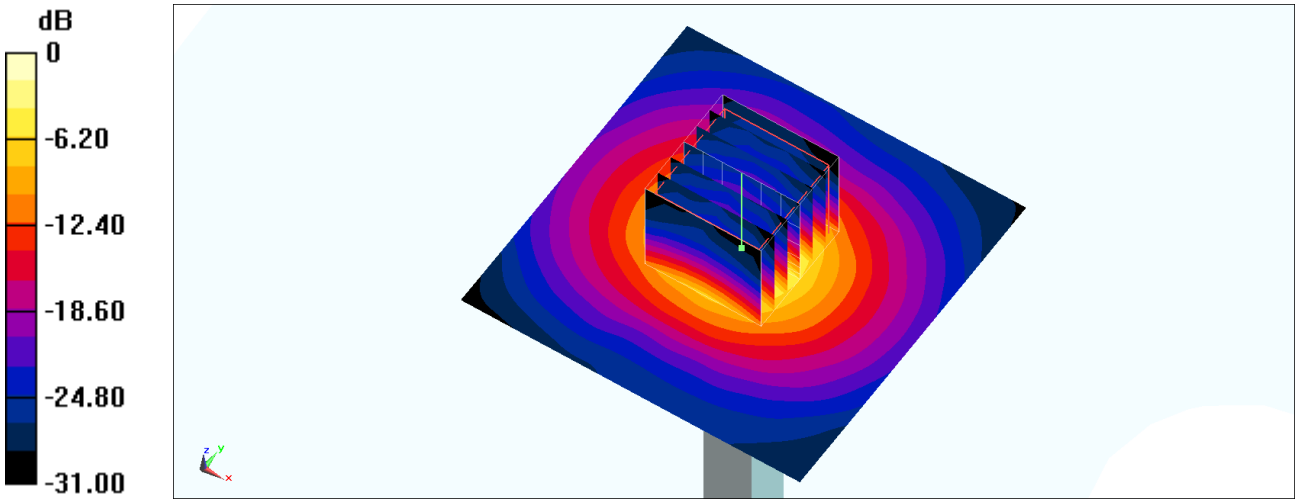

0 dB = 20.8 W/kg = 13.18 dBW/kg