System Check_Head_750MHz

DUT: D750V3-1012

Communication System: CW; Frequency: 750 MHz;Duty Cycle: 1:1
Medium: HSL_750_181204 Medium parameters used: f = 750 MHz; σ = 0.884 S/m; ε_r = 42.887; ρ = 1000 kg/m^3
Ambient Temperature：23.4 ℃; Liquid Temperature：22.4 ℃

DASY5 Configuration
- Probe: ES3DV3 - SN3270;ConvF(6.56, 6.56, 6.56) ;Calibrated: 2018/9/24
- Sensor-Surface: 3mm (Mechanical Surface Detection)
- Electronics: DAE4 Sn1326; Calibrated: 2018/9/18
- Phantom: Twin-SAM V5.0 (30deg probe tilt); Type: QD 000 P40 CD; Serial: 1885
- Measurement SW: DASY52, Version 52.10 (2); SEMCAD X Version 14.6.12 (7450)

Pin=250mW/Area Scan (61x61x1): Interpolated grid: dx=1.500 mm, dy=1.500 mm
Maximum value of SAR (interpolated) = 2.55 W/kg

Pin=250mW/Zoom Scan (5x5x7)/Cube 0: Measurement grid: dx=8mm, dy=8mm, dz=5mm
Reference Value = 54.30 V/m; Power Drift = 0.15 dB
Peak SAR (extrapolated) = 3.00 W/kg
SAR(1 g) = 2.1 W/kg; SAR(10 g) = 1.42 W/kg
Maximum value of SAR (measured) = 2.42 W/kg

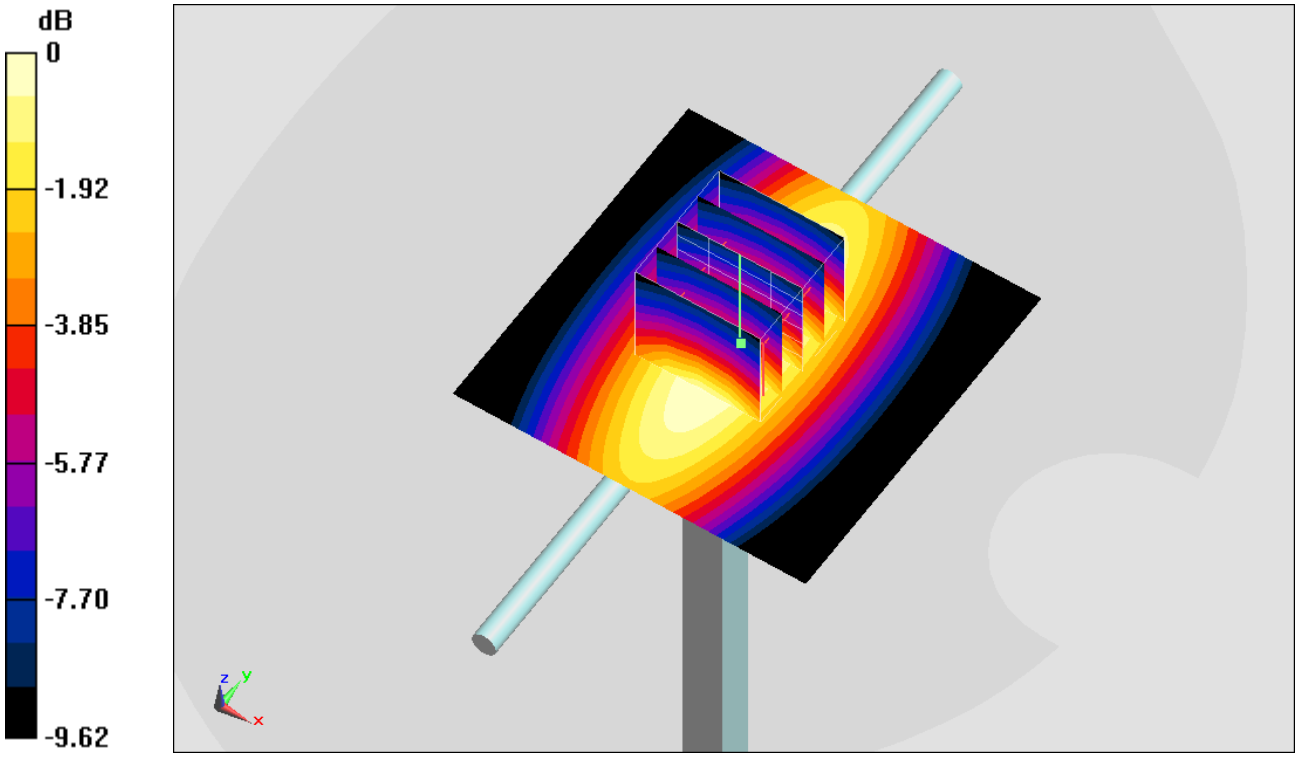

0 dB = 2.42 W/kg = 3.84 dBW/kg

System Check_Head_750MHz

DUT: D750V3-1012

Communication System: CW ; Frequency: 750 MHz;Duty Cycle: 1:1
Medium: HSL_750_181209 Medium parameters used: f = 750 MHz; σ = 0.899 S/m; ε_r = 42.886; ρ = 1000 kg/m^3
Ambient Temperature：23.6 ℃; Liquid Temperature：22.6 ℃

DASY5 Configuration:
- Probe: EX3DV4 - SN3976; ConvF(10.74, 10.74, 10.74) ; Calibrated: 2018/1/23
- Sensor-Surface: 1.4mm (Mechanical Surface Detection)
- Electronics: DAE4 Sn1424; Calibrated: 2018/1/18
- Phantom: SAM_Right; Type: SAM; Serial: TP:1479
- Measurement SW: DASY52, Version 52.10 (1);SEMCAD X Version 14.6.11 (7439)

Pin=250mW/Area Scan (61x61x1): Interpolated grid: dx=1.500 mm, dy=1.500 mm
Maximum value of SAR (interpolated) = 2.93 W/kg

Pin=250mW/Zoom Scan (5x5x7)/Cube 0: Measurement grid: dx=8mm, dy=8mm, dz=5mm
Reference Value = 59.75 V/m; Power Drift = -0.10 dB
Peak SAR (extrapolated) = 3.31 W/kg
SAR(1 g) = 2.19 W/kg; SAR(10 g) = 1.45 W/kg
Maximum value of SAR (measured) = 2.92 W/kg

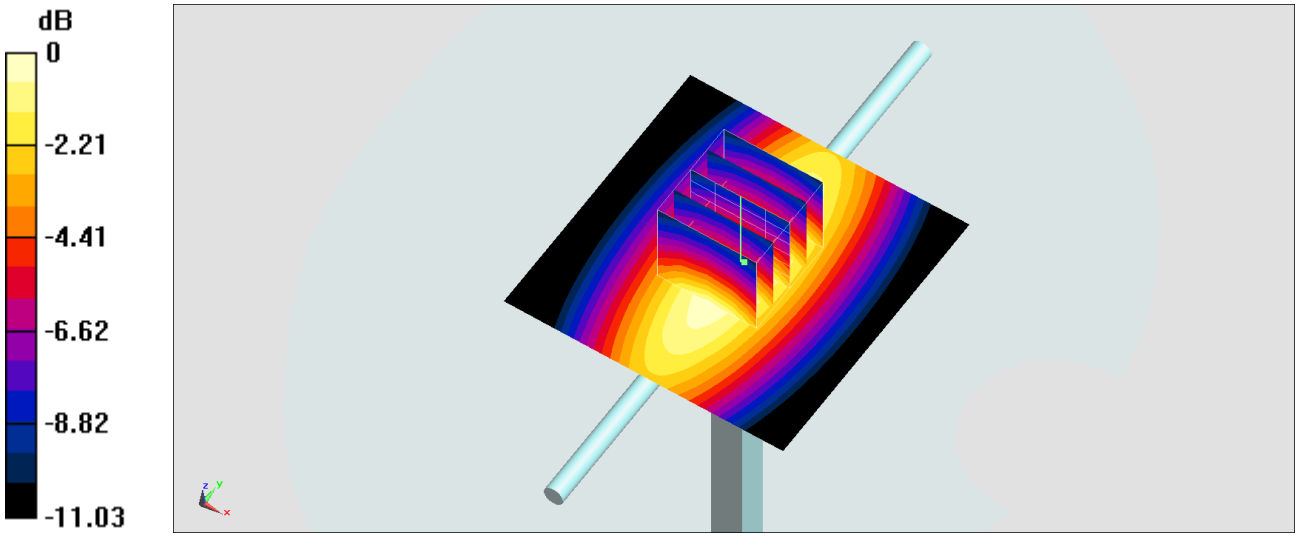

0 dB = 2.92 W/kg = 4.65 dBW/kg

System Check_Body_750MHz

DUT: D750V3-1012

Communication System: CW; Frequency: 750 MHz;Duty Cycle: 1:1
Medium: MSL_750_181202 Medium parameters used: f = 750 MHz; σ = 0.971 S/m; ε_r = 54.211; ρ = 1000 kg/m^3
Ambient Temperature：23.2 ℃; Liquid Temperature：22.2 ℃

DASY5 Configuration:
- Probe: EX3DV4 - SN7515; ConvF(10.15, 10.15, 10.15); Calibrated: 2018/10/3;
- Sensor-Surface: 1.4mm (Mechanical Surface Detection)
- Electronics: DAE4 Sn918; Calibrated: 2018/6/20
- Phantom: SAM LEFT; Type: QD000P40CD; Serial: TP:1718
- Measurement SW: DASY52, Version 52.10 (0);SEMCAD X Version 14.6.10 (7417)

Pin=250mW/Area Scan (61x61x1): Interpolated grid: dx=1.500 mm, dy=1.500 mm
Maximum value of SAR (interpolated) = 2.80 W/kg

Pin=250mW/Zoom Scan (5x5x7)/Cube 0: Measurement grid: dx=8mm, dy=8mm, dz=5mm
Reference Value = 56.13 V/m; Power Drift = -0.11 dB
Peak SAR (extrapolated) = 3.15 W/kg
SAR(1 g) = 2.13 W/kg; SAR(10 g) = 1.44 W/kg
Maximum value of SAR (measured) = 2.79 W/kg

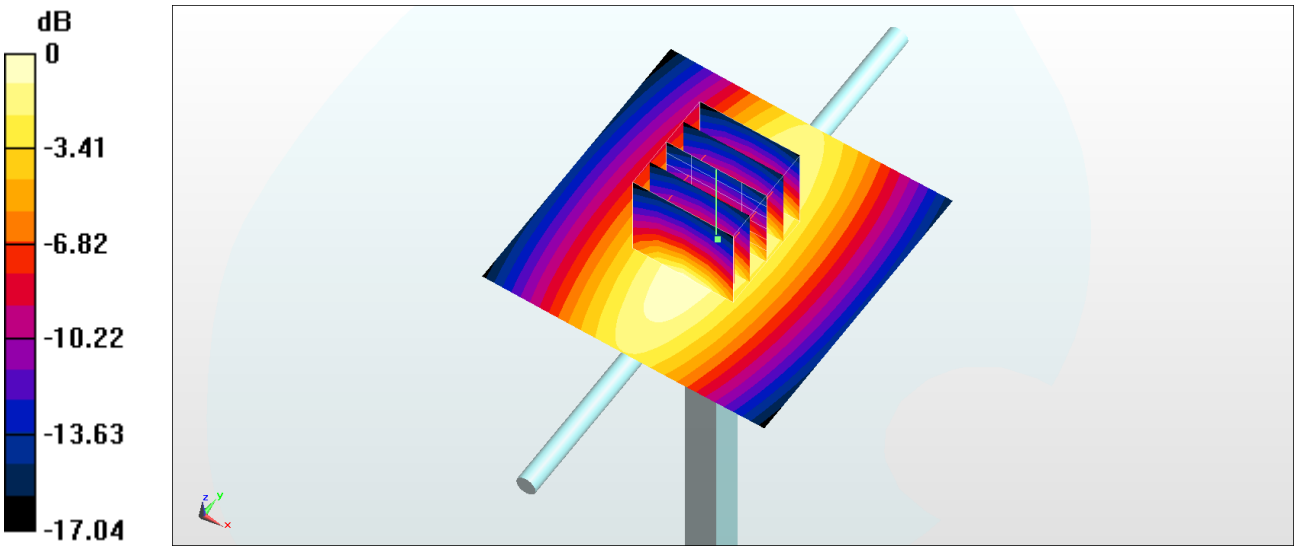

0 dB = 2.80 W/kg = 4.47 dBW/kg

System Check_Head_835MHz

DUT: D835V2-499

Communication System: CW; Frequency: 835 MHz;Duty Cycle: 1:1
Medium: HSL_850_181127 Medium parameters used: f = 835 MHz; σ = 0.893 S/m; ε_r = 42.388; ρ = 1000 kg/m^3
Ambient Temperature：23.4 ℃; Liquid Temperature：22.4 ℃

DASY5 Configuration
- Probe: EX3DV4 - SN7515;ConvF(9.75, 9.75, 9.75);Calibrated: 2018/10/3
- Sensor-Surface: 1.4mm (Mechanical Surface Detection)
- Electronics: DAE4 Sn918; Calibrated: 2018/6/20
- Phantom: Twin-SAM V5.0 (30deg probe tilt); Type: QD 000 P40 CD; Serial: 1885
- Measurement SW: DASY52, Version 52.10 (2); SEMCAD X Version 14.6.12 (7450)

Pin=250mW/Area Scan (61x61x1): Interpolated grid: dx=1.500 mm, dy=1.500 mm
Maximum value of SAR (interpolated) = 3.42 W/kg

Pin=250mW/Zoom Scan (5x5x7)/Cube 0: Measurement grid: dx=8mm, dy=8mm, dz=5mm
Reference Value = 64.39 V/m; Power Drift = -0.06 dB
Peak SAR (extrapolated) = 3.91 W/kg
SAR(1 g) = 2.54 W/kg; SAR(10 g) = 1.65 W/kg
Maximum value of SAR (measured) = 3.41 W/kg

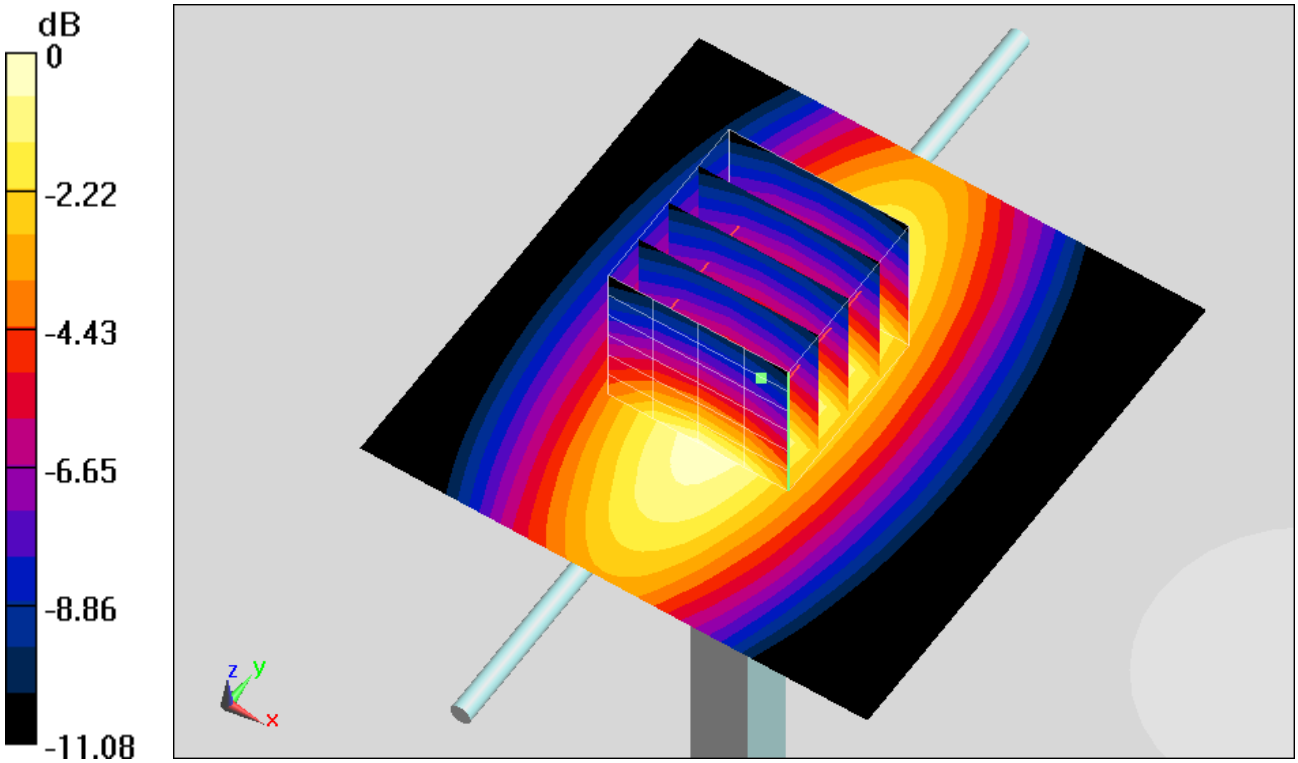

0 dB = 3.41 W/kg = 5.33 dBW/kg

System Check_Head_835MHz

DUT: D835V2-499

Communication System: CW; Frequency: 835 MHz;Duty Cycle: 1:1
Medium: HSL_850_181201 Medium parameters used: f = 835 MHz; σ = 0.902 S/m; ε_r = 43.087; ρ = 1000 kg/m^3
Ambient Temperature：23.5 ℃; Liquid Temperature：22.5 ℃

DASY5 Configuration:
- Probe: ES3DV3 - SN3270; ConvF(6.39, 6.39, 6.39) ; Calibrated: 2018/9/24
- Sensor-Surface: 3mm (Mechanical Surface Detection)
- Electronics: DAE3 Sn495; Calibrated: 2018/5/24
- Phantom: SAM_Right; Type: QD000P40CD; Serial: TP:1815
- Measurement SW: DASY52, Version 52.10 (2); SEMCAD X Version 14.6.12 (7450)

Pin=250mW/Area Scan (61x61x1): Interpolated grid: dx=1.500 mm, dy=1.500 mm
Maximum value of SAR (interpolated) = 2.98 W/kg

Pin=250mW/Zoom Scan (5x5x7)/Cube 0: Measurement grid: dx=8mm, dy=8mm, dz=5mm
Reference Value = 59.53 V/m; Power Drift = -0.02 dB
Peak SAR (extrapolated) = 3.64 W/kg
SAR(1 g) = 2.45 W/kg; SAR(10 g) = 1.59 W/kg
Maximum value of SAR (measured) = 2.88 W/kg

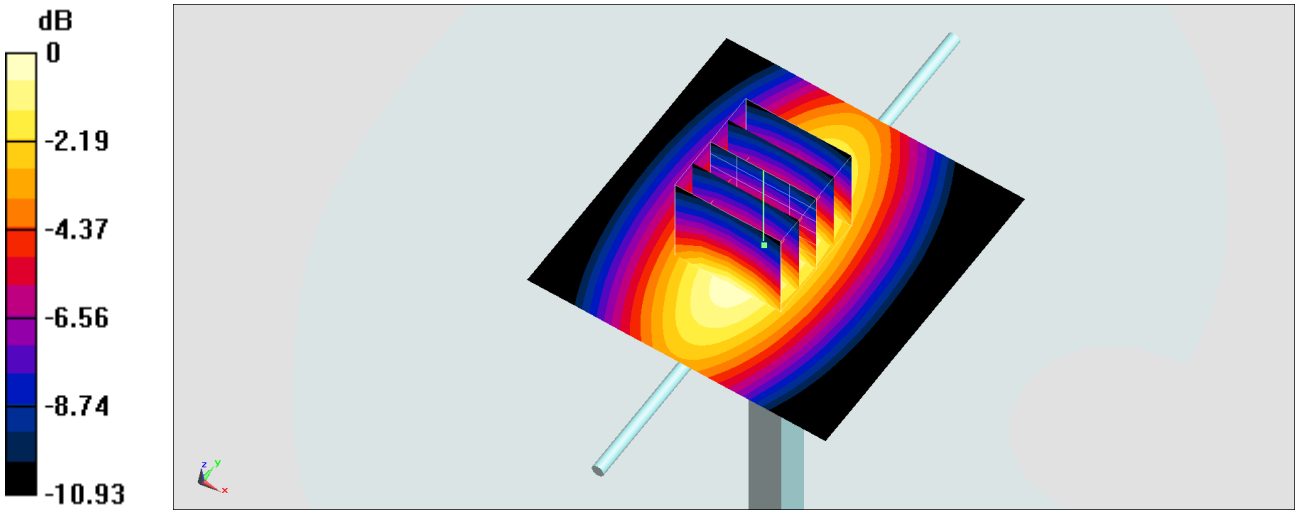

0 dB = 2.88 W/kg = 4.59 dBW/kg

System Check_Head_835MHz

DUT: D835V2-499

Communication System: CW; Frequency: 835 MHz;Duty Cycle: 1:1
Medium: HSL_850_181204 Medium parameters used: f = 835 MHz; σ = 0.889 S/m; ε_r = 42.03; ρ = 1000 kg/m^3
Ambient Temperature：23.9 ℃; Liquid Temperature：22.9 ℃

DASY5 Configuration
- Probe: ES3DV3 - SN3270;ConvF(6.39, 6.39, 6.39) ;Calibrated: 2018/9/24
- Sensor-Surface: 3mm (Mechanical Surface Detection)
- Electronics: DAE4 Sn1326; Calibrated: 2018/9/18
- Phantom: Twin-SAM V5.0 (30deg probe tilt); Type: QD 000 P40 CD; Serial: 1885
- Measurement SW: DASY52, Version 52.10 (2); SEMCAD X Version 14.6.12 (7450)

Pin=250mW/Area Scan (61x61x1): Interpolated grid: dx=1.500 mm, dy=1.500 mm
Maximum value of SAR (interpolated) = 2.95 W/kg

Pin=250mW/Zoom Scan (5x5x7)/Cube 0: Measurement grid: dx=8mm, dy=8mm, dz=5mm
Reference Value = 59.27 V/m; Power Drift = 0.09 dB
Peak SAR (extrapolated) = 3.81 W/kg
SAR(1 g) = 2.52 W/kg; SAR(10 g) = 1.63 W/kg
Maximum value of SAR (measured) = 2.97 W/kg

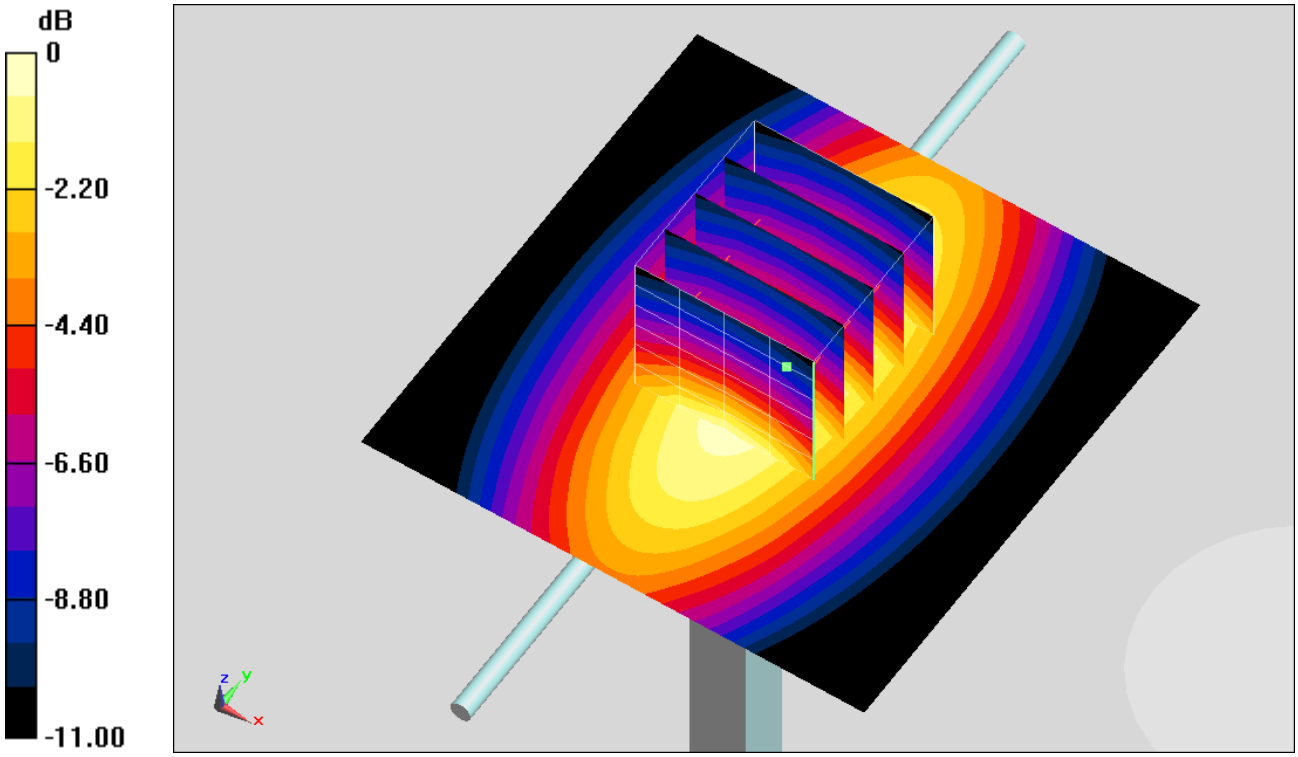

0 dB = 2.97 W/kg = 4.73 dBW/kg

System Check_Head_835MHz

DUT: D835V2-499

Communication System: CW; Frequency: 835 MHz;Duty Cycle: 1:1
Medium: HSL_850_181209 Medium parameters used: f = 835 MHz; σ = 0.889 S/m; ε_r = 42.712; ρ = 1000 kg/m^3
Ambient Temperature：23.6 ℃; Liquid Temperature：22.6 ℃

DASY5 Configuration:
- Probe: EX3DV4 - SN3976; ConvF(10.19, 10.19, 10.19); Calibrated: 2018/1/23
- Sensor-Surface: 1.4mm (Mechanical Surface Detection)
- Electronics: DAE4 Sn1424; Calibrated: 2018/1/18
- Phantom: SAM_Right; Type: SAM; Serial: TP:1479
- Measurement SW: DASY52, Version 52.10 (1);SEMCAD X Version 14.6.11 (7439)

Pin=250mW/Area Scan (61x61x1): Interpolated grid: dx=1.500 mm, dy=1.500 mm
Maximum value of SAR (interpolated) = 3.33 W/kg

Pin=250mW/Zoom Scan (5x5x7)/Cube 0: Measurement grid: dx=8mm, dy=8mm, dz=5mm
Reference Value = 63.31 V/m; Power Drift = 0.03 dB
Peak SAR (extrapolated) = 3.86 W/kg
SAR(1 g) = 2.49 W/kg; SAR(10 g) = 1.63 W/kg
Maximum value of SAR (measured) = 3.38 W/kg

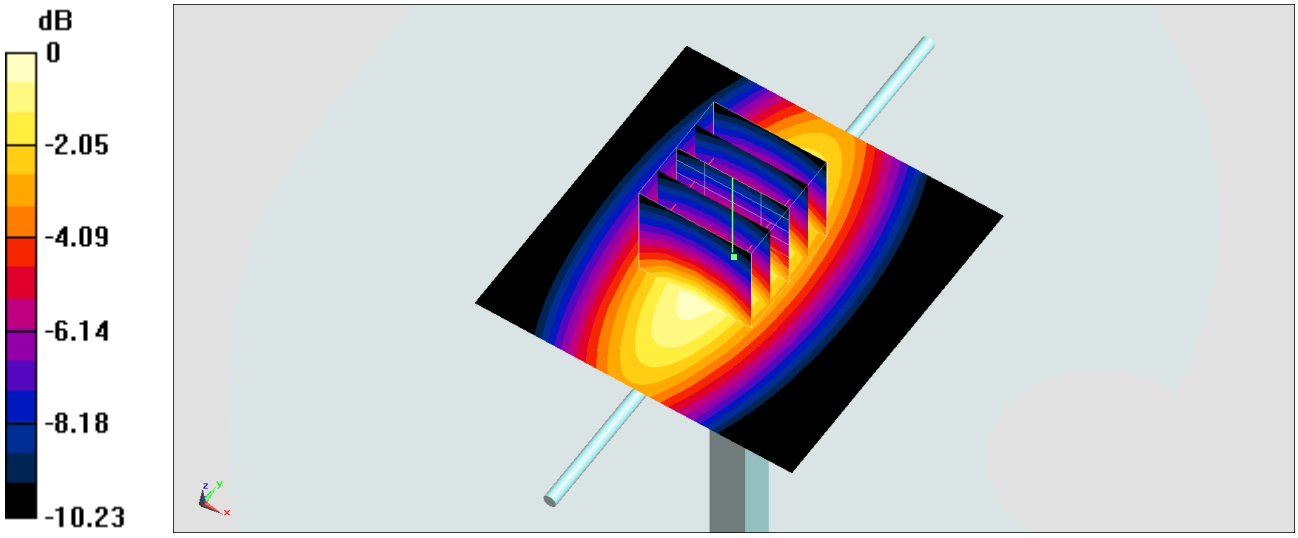

0 dB = 3.38 W/kg = 5.29 dBW/kg

System Check_Body_835MHz

DUT: D835V2-499

Communication System: CW; Frequency: 835 MHz;Duty Cycle: 1:1
Medium: MSL_850_181203 Medium parameters used: f = 835 MHz; σ = 0.988 S/m; ε_r = 54.339; ρ = 1000 kg/m^3
Ambient Temperature：23.3 ℃; Liquid Temperature：22.3 ℃

DASY5 Configuration:
- Probe: EX3DV4 - SN7515; ConvF(9.99, 9.99, 9.99); Calibrated: 2018/10/3;
- Sensor-Surface: 1.4mm (Mechanical Surface Detection)
- Electronics: DAE4 Sn918; Calibrated: 2018/6/20
- Phantom: SAM LEFT; Type: QD000P40CD; Serial: TP:1718
- Measurement SW: DASY52, Version 52.10 (0);SEMCAD X Version 14.6.10 (7417)

Pin=250mW/Area Scan (61x61x1): Interpolated grid: dx=1.500 mm, dy=1.500 mm
Maximum value of SAR (interpolated) = 3.63 W/kg

Pin=250mW/Zoom Scan (5x5x7)/Cube 0: Measurement grid: dx=8mm, dy=8mm, dz=5mm
Reference Value = 61.40 V/m; Power Drift = -0.06 dB
Peak SAR (extrapolated) = 3.74 W/kg
SAR(1 g) = 2.58 W/kg; SAR(10 g) = 1.72 W/kg
Maximum value of SAR (measured) = 3.36 W/kg

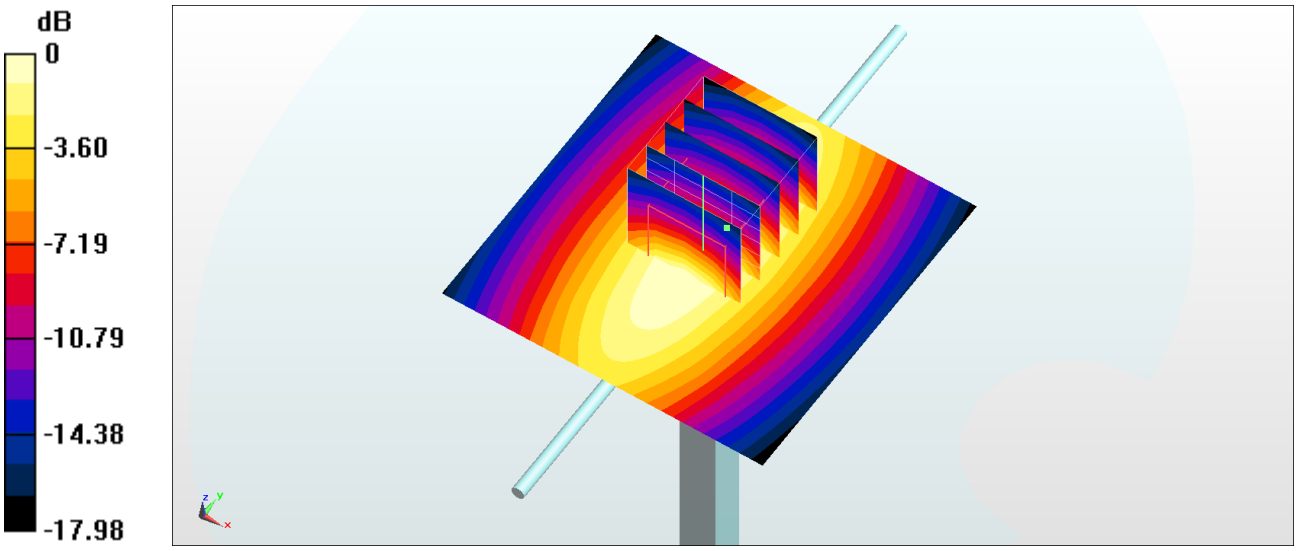

0 dB = 3.63 W/kg = 5.60 dBW/kg

System Check_Body_835MHz

DUT: D835V2-499

Communication System: CW; Frequency: 835 MHz;Duty Cycle: 1:1
Medium: MSL_850_181206 Medium parameters used: f = 835 MHz; σ = 0.983 S/m; ε_r = 54.216; ρ = 1000 kg/m^3
Ambient Temperature：23.5 ℃;?Liquid Temperature：22.5 ℃

DASY5 Configuration
- Probe: ES3DV3 - SN3270;ConvF(6.11, 6.11, 6.11) ;Calibrated: 2018/9/24
- Sensor-Surface: 3mm (Mechanical Surface Detection)
- Electronics: DAE4 Sn1326; Calibrated: 2018/9/18
- Phantom: Twin-SAM V5.0 (30deg probe tilt); Type: QD 000 P40 CD; Serial: 1885
- Measurement SW: DASY52, Version 52.10 (2); SEMCAD X Version 14.6.12 (7450)

Pin=250mW/Area Scan (61x61x1): Interpolated grid: dx=1.500 mm, dy=1.500 mm
Maximum value of SAR (interpolated) = 3.16 W/kg

Pin=250mW/Zoom Scan (5x5x7)/Cube 0: Measurement grid: dx=8mm, dy=8mm, dz=5mm
Reference Value = 60.41 V/m; Power Drift = -0.15 dB
Peak SAR (extrapolated) = 3.95 W/kg
SAR(1 g) = 2.4 W/kg; SAR(10 g) = 1.56 W/kg
Maximum value of SAR (measured) = 3.12 W/kg

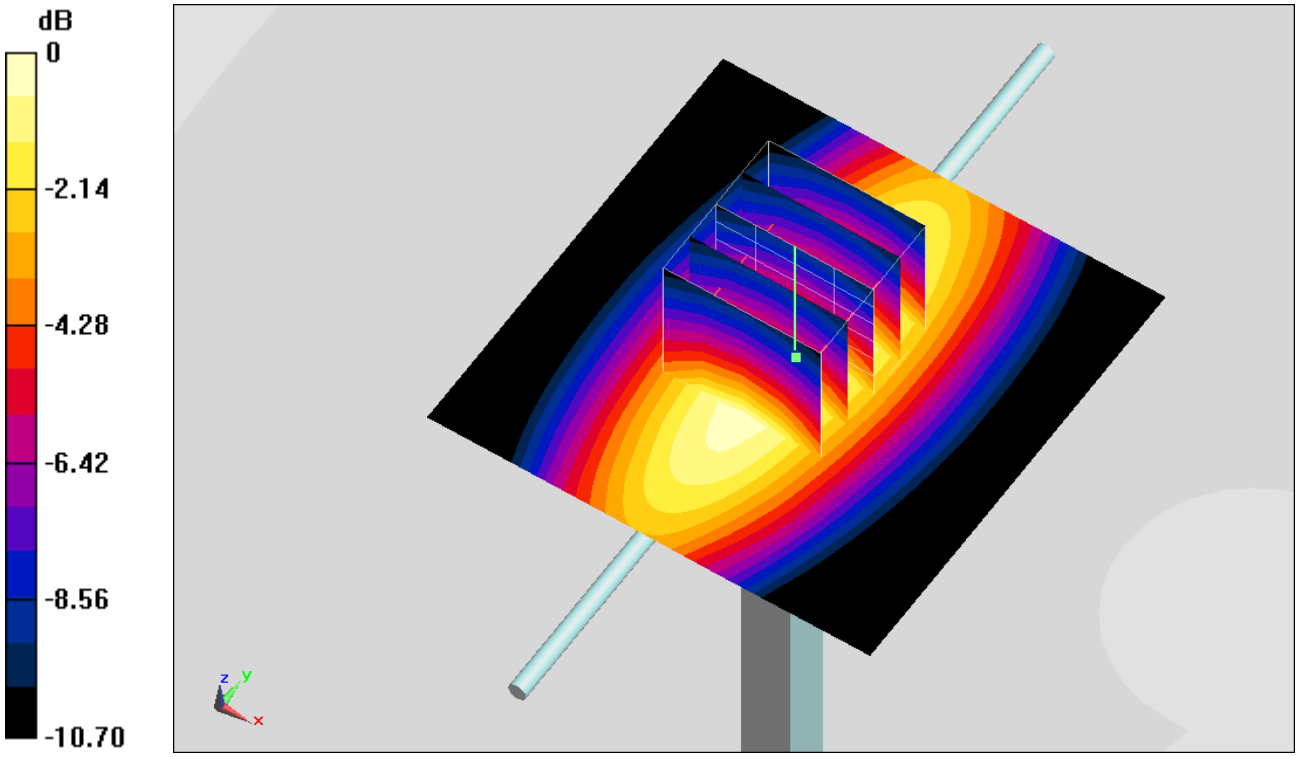

0 dB = 3.12 W/kg = 4.94 dBW/kg

System Check_Head_1750MHz

DUT: D1750V2-1068

Communication System: CW; Frequency: 1750 MHz;Duty Cycle: 1:1
Medium: HSL_1750_181203 Medium parameters used: f = 1750 MHz; σ = 1.358 S/m; ε_r = 41.604; ρ = 1000 kg/m^3
Ambient Temperature：23.8 ℃; Liquid Temperature：22.8 ℃

DASY5 Configuration
- Probe: ES3DV3 - SN3270;ConvF(5.42, 5.42, 5.42) ;Calibrated: 2018/9/24
- Sensor-Surface: 3mm (Mechanical Surface Detection)
- Electronics: DAE4 Sn1326; Calibrated: 2018/9/18
- Phantom: Twin-SAM V5.0 (30deg probe tilt); Type: QD 000 P40 CD; Serial: 1885
- Measurement SW: DASY52, Version 52.10 (2); SEMCAD X Version 14.6.12 (7450)

Pin=250mW/Area Scan (61x61x1): Interpolated grid: dx=1.500 mm, dy=1.500 mm
Maximum value of SAR (interpolated) = 11.2 W/kg

Pin=250mW/Zoom Scan (5x5x7)/Cube 0: Measurement grid: dx=8mm, dy=8mm, dz=5mm
Reference Value = 92.80 V/m; Power Drift = 0.03 dB
Peak SAR (extrapolated) = 15.7 W/kg
SAR(1 g) = 8.9 W/kg; SAR(10 g) = 4.74 W/kg
Maximum value of SAR (measured) = 11.0 W/kg

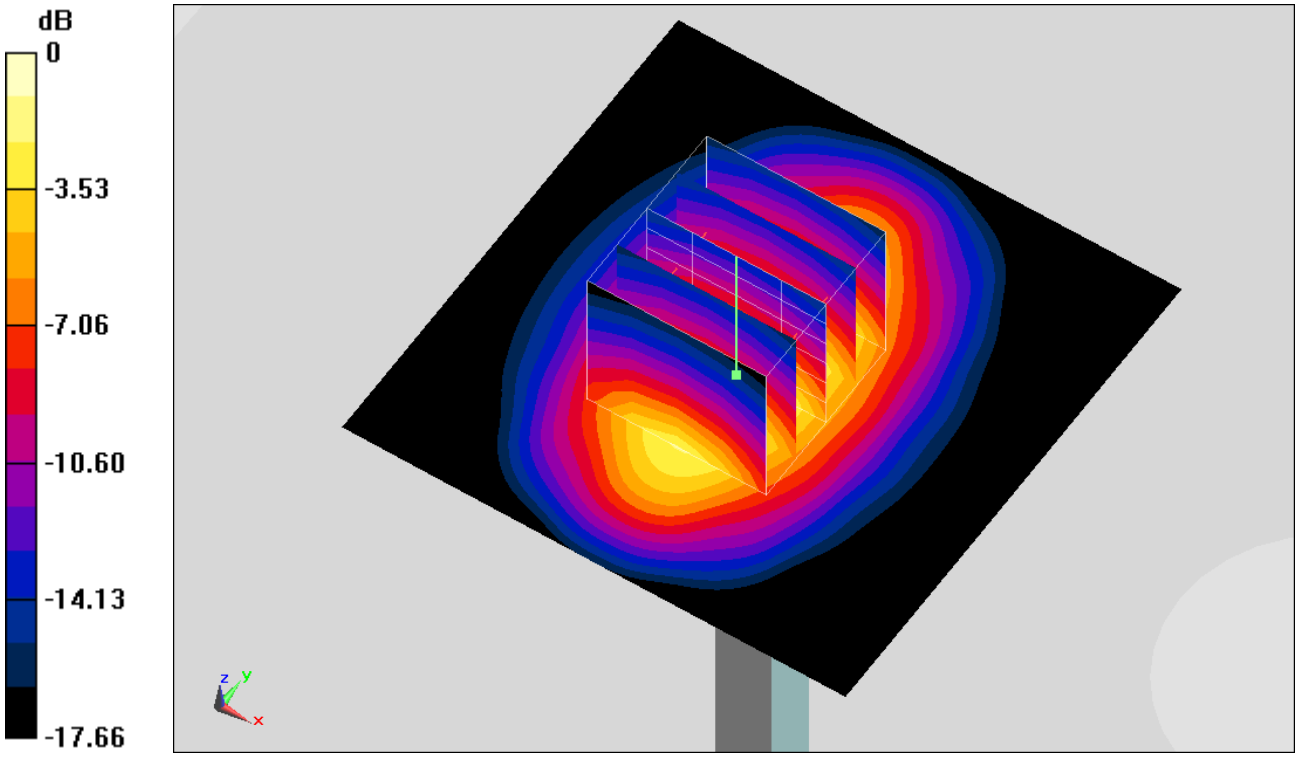

0 dB = 11.0 W/kg = 10.41 dBW/kg

System Check_Head_1750MHz

DUT: D1750V2-1068

Communication System: CW; Frequency: 1750 MHz;Duty Cycle: 1:1
Medium: HSL_1750_181213 Medium parameters used: f = 1750 MHz; σ = 1.347 S/m; ε_r = 41.486; ρ = 1000 kg/m^3
Ambient Temperature：23.5 ℃; Liquid Temperature：22.5 ℃

DASY5 Configuration
- Probe: ES3DV3 - SN3270;ConvF(5.42, 5.42, 5.42) ;Calibrated: 2018/9/24
- Sensor-Surface: 3mm (Mechanical Surface Detection)
- Electronics: DAE4 Sn853; Calibrated: 2018/7/24
- Phantom: Twin-SAM V5.0 (30deg probe tilt); Type: QD 000 P40 CD; Serial: 1885
- Measurement SW: DASY52, Version 52.10 (2); SEMCAD X Version 14.6.12 (7450)

Pin=250mW/Area Scan (61x61x1): Interpolated grid: dx=1.500 mm, dy=1.500 mm
Maximum value of SAR (interpolated) = 11.1 W/kg

Pin=250mW/Zoom Scan (5x5x7)/Cube 0: Measurement grid: dx=8mm, dy=8mm, dz=5mm
Reference Value = 92.52 V/m; Power Drift = 0.03 dB
Peak SAR (extrapolated) = 15.4 W/kg
SAR(1 g) = 8.77 W/kg; SAR(10 g) = 4.67 W/kg
Maximum value of SAR (measured) = 10.9 W/kg

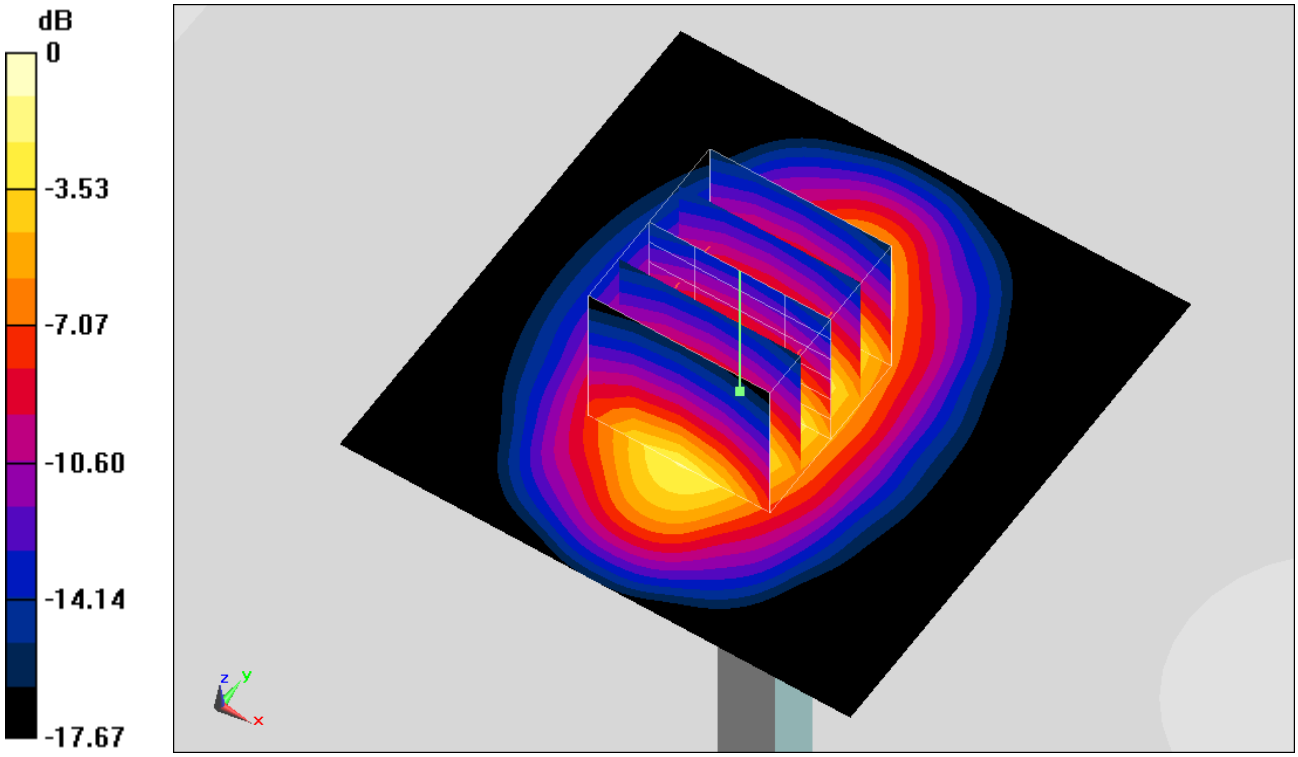

0 dB = 10.9 W/kg = 10.37 dBW/kg

System Check_Body_1750MHz

DUT: D1750V2-1068

Communication System: CW; Frequency: 1750 MHz;Duty Cycle: 1:1
Medium: MSL_1750_181208 Medium parameters used: f = 1750 MHz; σ = 1.477 S/m; ε_r = 55.125; ρ = 1000 kg/m^3
Ambient Temperature：23.6 ℃; Liquid Temperature：22.6 ℃

DASY5 Configuration:
- Probe: ES3DV3 - SN3169; ConvF(5.06, 5.06, 5.06); Calibrated: 2018/5/28;
- Sensor-Surface: 3mm (Mechanical Surface Detection)
- Electronics: DAE4 Sn853; Calibrated: 2018/7/24
- Phantom: SAM LEFT; Type: QD000P40CD; Serial: TP:1718
- Measurement SW: DASY52, Version 52.10 (0);SEMCAD X Version 14.6.10 (7417)

Pin=250mW/Area Scan (61x61x1): Interpolated grid: dx=1.500 mm, dy=1.500 mm
Maximum value of SAR (interpolated) = 11.6 W/kg

Pin=250mW/Zoom Scan (5x5x7)/Cube 0: Measurement grid: dx=8mm, dy=8mm, dz=5mm
Reference Value = 90.92 V/m; Power Drift = 0.03 dB
Peak SAR (extrapolated) = 16.0 W/kg
SAR(1 g) = 9.34 W/kg; SAR(10 g) = 5.1 W/kg
Maximum value of SAR (measured) = 10.9 W/kg

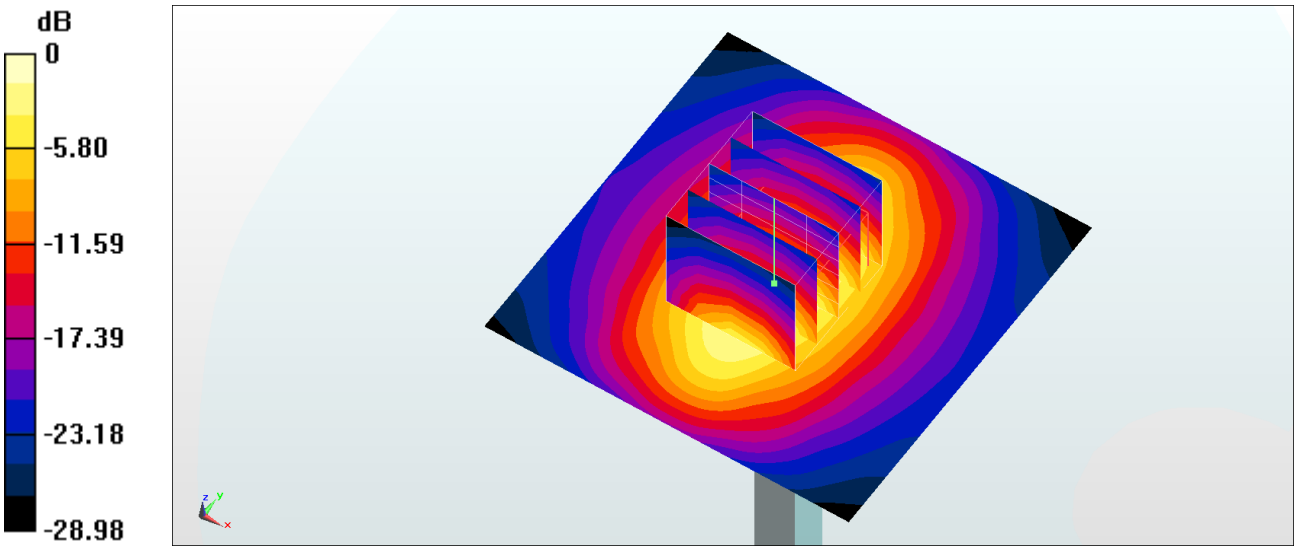

0 dB = 11.6 W/kg = 10.64 dBW/kg

System Check_Body_1750MHz

DUT: D1750V2-1068

Communication System: CW; Frequency: 1750 MHz;Duty Cycle: 1:1
Medium: MSL_1750_181210 Medium parameters used: f = 1750 MHz; σ = 1.489 S/m; ε_r = 54.653; ρ = 1000 kg/m^3
Ambient Temperature：23.5 ℃; Liquid Temperature：22.5 ℃

DASY5 Configuration
- Probe: ES3DV3 - SN3270;ConvF(4.97, 4.97, 4.97) ;Calibrated: 2018/9/24
- Sensor-Surface: 3mm (Mechanical Surface Detection)
- Electronics: DAE4 Sn1326; Calibrated: 2018/9/18
- Phantom: Twin-SAM V5.0 (30deg probe tilt); Type: QD 000 P40 CD; Serial: 1885
- Measurement SW: DASY52, Version 52.10 (2); SEMCAD X Version 14.6.12 (7450)

Pin=250mW/Area Scan (61x61x1): Interpolated grid: dx=1.500 mm, dy=1.500 mm
Maximum value of SAR (interpolated) = 11.4 W/kg

Pin=250mW/Zoom Scan (5x5x7)/Cube 0: Measurement grid: dx=8mm, dy=8mm, dz=5mm
Reference Value = 91.04 V/m; Power Drift = -0.08 dB
Peak SAR (extrapolated) = 15.1 W/kg
SAR(1 g) = 9.23 W/kg; SAR(10 g) = 5.13 W/kg
Maximum value of SAR (measured) = 11.3 W/kg

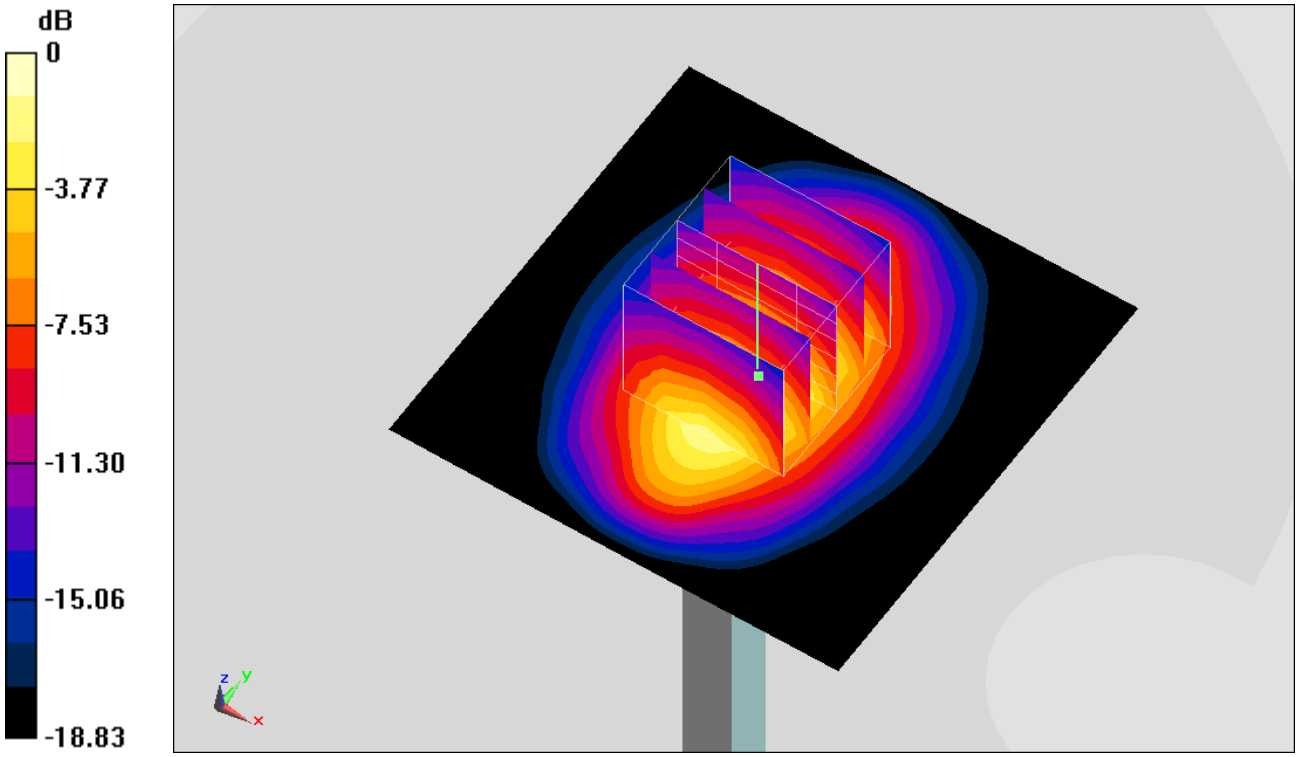

0 dB = 11.3 W/kg = 10.53 dBW/kg

System Check_Head_1900MHz

DUT: D1900V2-5d041

Communication System: CW; Frequency: 1900 MHz;Duty Cycle: 1:1
Medium: HSL_1900_181205 Medium parameters used: f = 1900 MHz; σ = 1.454 S/m; ε_r = 39.016; ρ = 1000 kg/m^3
Ambient Temperature：23.6 ℃; Liquid Temperature：22.6 ℃

DASY5 Configuration
- Probe: ES3DV3 - SN3270;ConvF(5.17, 5.17, 5.17) ;Calibrated: 2018/9/24
- Sensor-Surface: 3mm (Mechanical Surface Detection)
- Electronics: DAE4 Sn1326; Calibrated: 2018/9/18
- Phantom: Twin-SAM V5.0 (30deg probe tilt); Type: QD 000 P40 CD; Serial: 1885
- Measurement SW: DASY52, Version 52.10 (2); SEMCAD X Version 14.6.12 (7450)

Pin=250mW/Area Scan (61x61x1): Interpolated grid: dx=1.500 mm, dy=1.500 mm
Maximum value of SAR (interpolated) = 13.1 W/kg

Pin=250mW/Zoom Scan (5x5x7)/Cube 0: Measurement grid: dx=8mm, dy=8mm, dz=5mm
Reference Value = 90.32 V/m; Power Drift = -0.08 dB
Peak SAR (extrapolated) = 18.1 W/kg
SAR(1 g) = 10 W/kg; SAR(10 g) = 5.22 W/kg
Maximum value of SAR (measured) = 12.5 W/kg

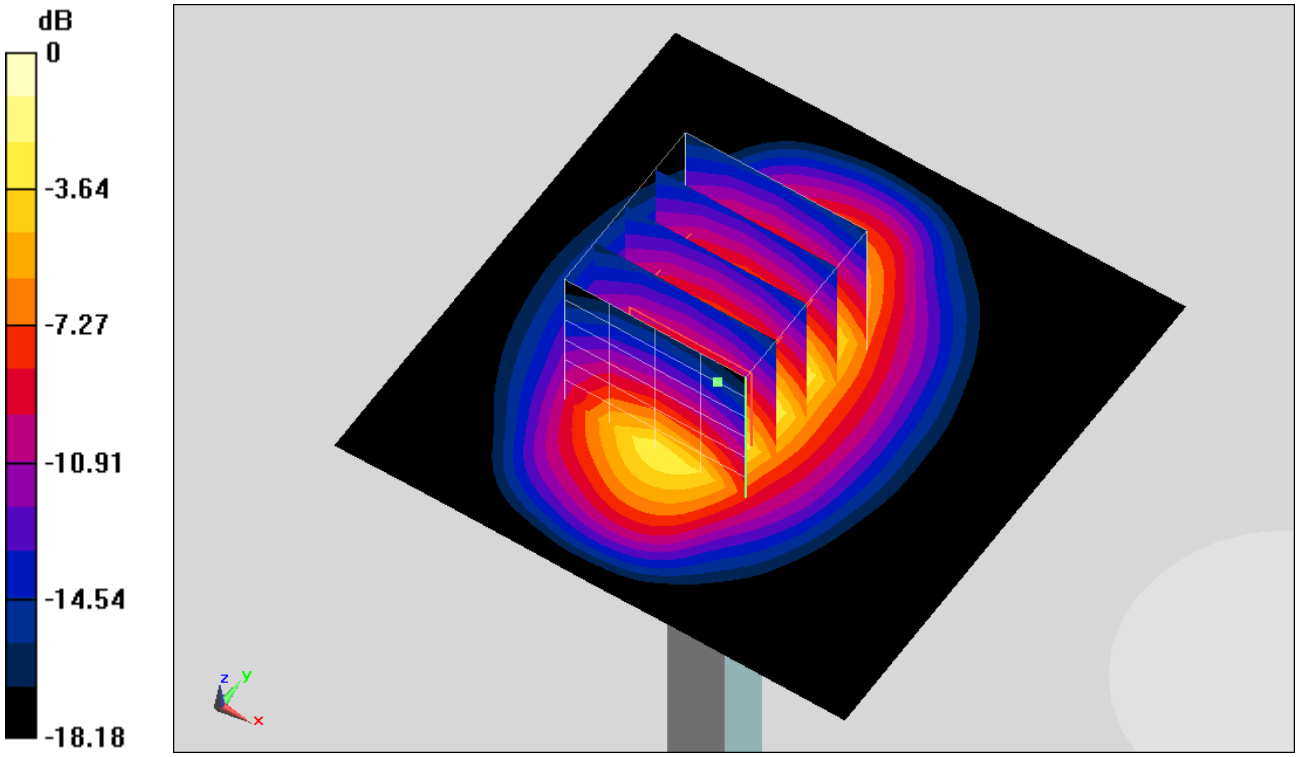

0 dB = 12.5 W/kg = 10.97 dBW/kg

System Check_Head_1900MHz

DUT: D1900V2-5d041

Communication System: CW; Frequency: 1900 MHz;Duty Cycle: 1:1
Medium: HSL_1900_181208 Medium parameters used: f = 1900 MHz; σ = 1.432 S/m; ε_r = 39.032; ρ = 1000 kg/m^3
Ambient Temperature：23.8 ℃; Liquid Temperature：22.8 ℃

DASY5 Configuration:
- Probe: ES3DV3 - SN3169; ConvF(5.27, 5.27, 5.27); Calibrated: 2018/5/28;
- Sensor-Surface: 3mm (Mechanical Surface Detection)
- Electronics: DAE4 Sn853; Calibrated: 2018/7/24
- Phantom: SAM LEFT; Type: QD000P40CD; Serial: TP:1718
- Measurement SW: DASY52, Version 52.10 (0);SEMCAD X Version 14.6.10 (7417)

Pin=250mW/Area Scan (61x61x1): Interpolated grid: dx=1.500 mm, dy=1.500 mm
Maximum value of SAR (interpolated) = 13.4 W/kg

Pin=250mW/Zoom Scan (5x5x7)/Cube 0: Measurement grid: dx=8mm, dy=8mm, dz=5mm
Reference Value = 98.87 V/m; Power Drift = 0.04 dB
Peak SAR (extrapolated) = 19.6 W/kg
SAR(1 g) = 10.5 W/kg; SAR(10 g) = 5.34 W/kg
Maximum value of SAR (measured) = 13.3 W/kg

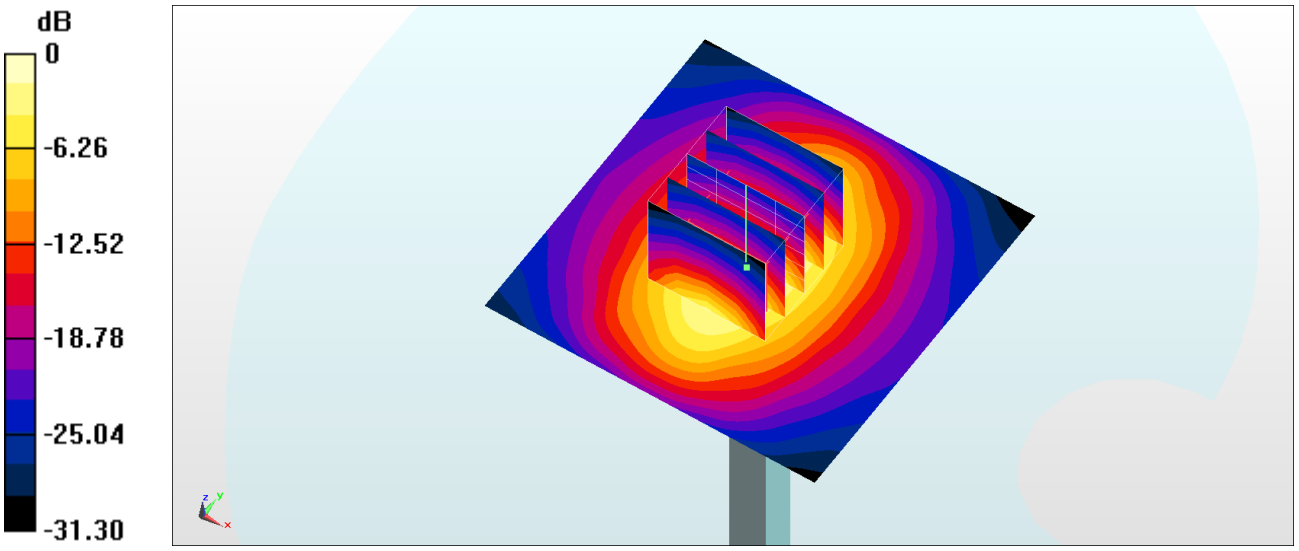

0 dB = 13.4 W/kg = 11.27 dBW/kg

System Check_Head_1900MHz

DUT: D1900V2-5d041

Communication System: CW; Frequency: 1900 MHz;Duty Cycle: 1:1
Medium: HSL_1900_181213 Medium parameters used: f = 1900 MHz; σ = 1.448 S/m; ε_r = 38.965; ρ = 1000 kg/m^3
Ambient Temperature：23.5 ℃; Liquid Temperature：22.5 ℃

DASY5 Configuration
- Probe: ES3DV3 - SN3270;ConvF(5.17, 5.17, 5.17) ;Calibrated: 2018/9/24
- Sensor-Surface: 3mm (Mechanical Surface Detection)
- Electronics: DAE4 Sn853; Calibrated: 2018/7/24
- Phantom: Twin-SAM V5.0 (30deg probe tilt); Type: QD 000 P40 CD; Serial: 1885
- Measurement SW: DASY52, Version 52.10 (2); SEMCAD X Version 14.6.12 (7450)

Pin=250mW/Area Scan (61x61x1): Interpolated grid: dx=1.500 mm, dy=1.500 mm
Maximum value of SAR (interpolated) = 12.9 W/kg

Pin=250mW/Zoom Scan (5x5x7)/Cube 0: Measurement grid: dx=8mm, dy=8mm, dz=5mm
Reference Value = 90.07 V/m; Power Drift = -0.11 dB
Peak SAR (extrapolated) = 17.9 W/kg
SAR(1 g) = 9.93 W/kg; SAR(10 g) = 5.18 W/kg
Maximum value of SAR (measured) = 12.4 W/kg

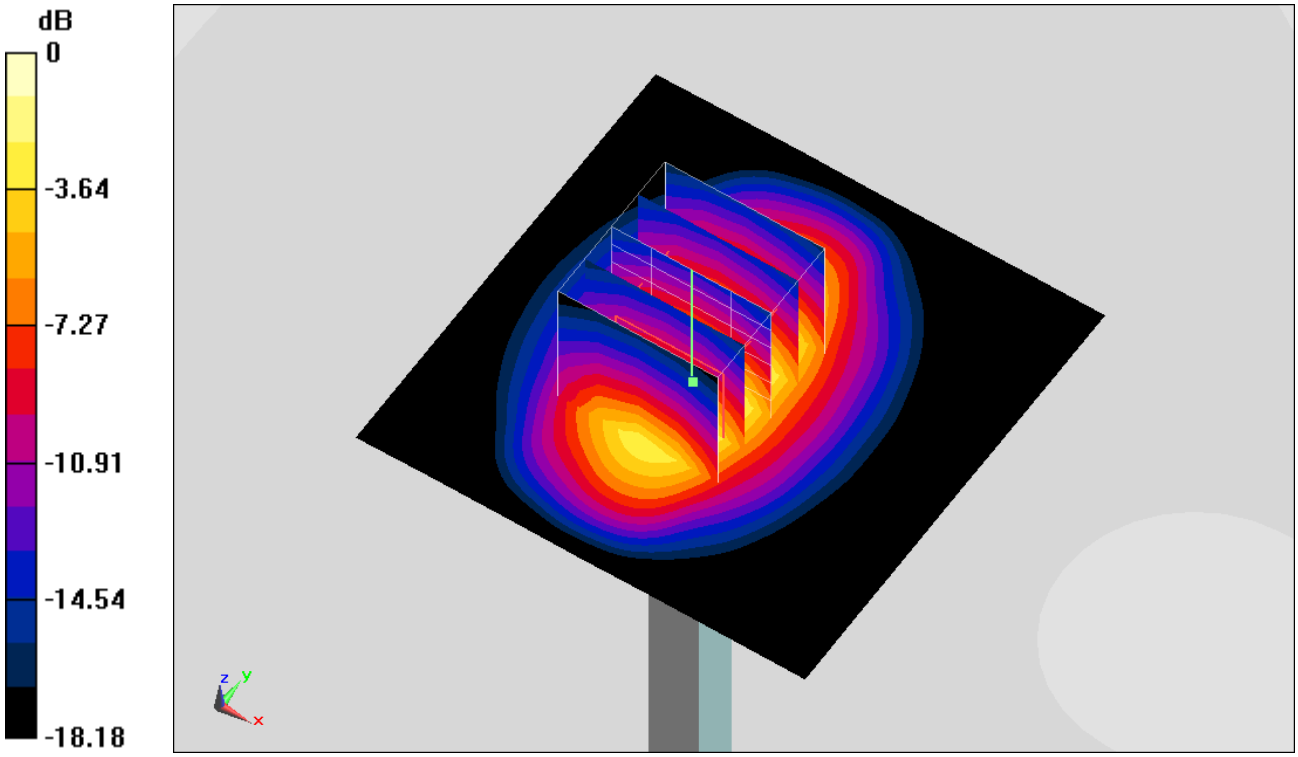

0 dB = 12.4 W/kg = 10.93 dBW/kg

System Check_Body_1900MHz

DUT: D1900V2-5d041

Communication System: CW; Frequency: 1900 MHz;Duty Cycle: 1:1
Medium: MSL_1900_181206 Medium parameters used: f = 1900 MHz; σ = 1.573 S/m; ε_r = 53.528; ρ =1000 kg/m^3
Ambient Temperature：23.5 ℃;?Liquid Temperature：22.5 ℃

DASY5 Configuration
- Probe: ES3DV3 - SN3270;ConvF(4.77, 4.77, 4.77) ;Calibrated: 2018/9/24
- Sensor-Surface: 3mm (Mechanical Surface Detection)
- Electronics: DAE4 Sn1326; Calibrated: 2018/9/18
- Phantom: Twin-SAM V5.0 (30deg probe tilt); Type: QD 000 P40 CD; Serial: 1885
- Measurement SW: DASY52, Version 52.10 (2); SEMCAD X Version 14.6.12 (7450)

Pin=250mW/Area Scan (61x61x1): Interpolated grid: dx=1.500 mm, dy=1.500 mm
Maximum value of SAR (interpolated) = 13.5 W/kg

Pin=250mW/Zoom Scan (5x5x7)/Cube 0: Measurement grid: dx=8mm, dy=8mm, dz=5mm
Reference Value = 96.83 V/m; Power Drift = -0.03 dB
Peak SAR (extrapolated) = 18.5 W/kg
SAR(1 g) = 10.6 W/kg; SAR(10 g) = 5.57 W/kg
Maximum value of SAR (measured) = 13.4 W/kg

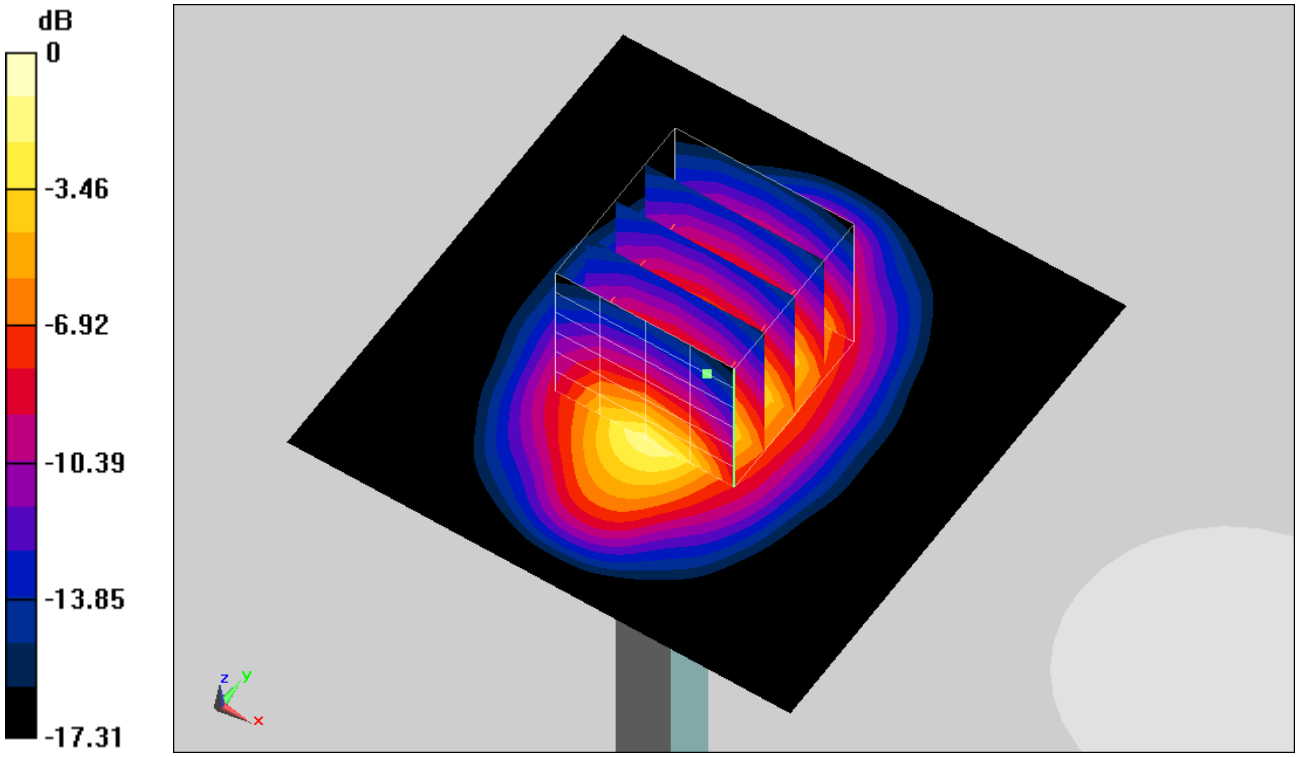

0 dB = 13.4 W/kg = 11.27 dBW/kg

System Check_Body_1900MHz

DUT: D1900V2-5d041

Communication System: CW; Frequency: 1900 MHz;Duty Cycle: 1:1
Medium: MSL_1900_181208 Medium parameters used: f = 1900 MHz; σ = 1.553 S/m; ε_r = 53.712; ρ = 1000 kg/m^3
Ambient Temperature：23.6 ℃; Liquid Temperature：22.6 ℃

DASY5 Configuration:
- Probe: ES3DV3 - SN3169; ConvF(4.8, 4.8, 4.8); Calibrated: 2018/5/28;
- Sensor-Surface: 3mm (Mechanical Surface Detection)
- Electronics: DAE4 Sn853; Calibrated: 2018/7/24
- Phantom: SAM LEFT; Type: QD000P40CD; Serial: TP:1718
- Measurement SW: DASY52, Version 52.10 (0);SEMCAD X Version 14.6.10 (7417)

Pin=250mW/Area Scan (61x61x1): Interpolated grid: dx=1.500 mm, dy=1.500 mm
Maximum value of SAR (interpolated) = 12.8 W/kg

Pin=250mW/Zoom Scan (5x5x7)/Cube 0: Measurement grid: dx=8mm, dy=8mm, dz=5mm
Reference Value = 93.86 V/m; Power Drift = -0.15 dB
Peak SAR (extrapolated) = 17.7 W/kg
SAR(1 g) = 10 W/kg; SAR(10 g) = 5.25 W/kg
Maximum value of SAR (measured) = 12.4 W/kg

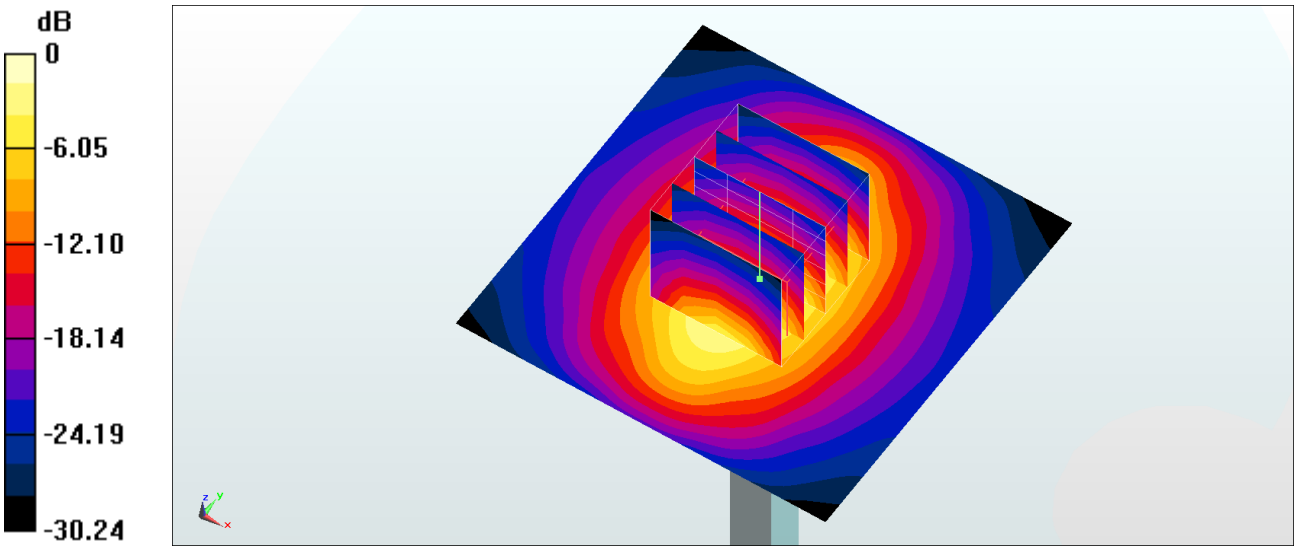

0 dB = 12.8 W/kg = 11.07 dBW/kg

System Check_Body_1900MHz

DUT: D1900V2-5d041

Communication System: CW; Frequency: 1900 MHz;Duty Cycle: 1:1
Medium: MSL_1900_181209 Medium parameters used: f = 1900 MHz; σ = 1.529 S/m; ε_r = 52.437; ρ = 1000 kg/m^3
Ambient Temperature：23.4 ℃; Liquid Temperature：22.4 ℃

DASY5 Configuration:
- Probe: EX3DV4 - SN3976; ConvF(8.09, 8.09, 8.09); Calibrated: 2018/1/23
- Sensor-Surface: 1.4mm (Mechanical Surface Detection)
- Electronics: DAE4 Sn1424; Calibrated: 2018/1/18
- Phantom: SAM_Left; Type: QD000P40CD; Serial: TP:1477
- Measurement SW: DASY52, Version 52.10 (1);SEMCAD X Version 14.6.11 (7439)

Pin=250mW/Area Scan (61x61x1): Interpolated grid: dx=1.500 mm, dy=1.500 mm
Maximum value of SAR (interpolated) = 15.1 W/kg

Pin=250mW/Zoom Scan (5x5x7)/Cube 0: Measurement grid: dx=8mm, dy=8mm, dz=5mm
Reference Value = 102.6 V/m; Power Drift = -0.05 dB
Peak SAR (extrapolated) = 17.3 W/kg
SAR(1 g) = 9.35 W/kg; SAR(10 g) = 4.83 W/kg
Maximum value of SAR (measured) = 14.5 W/kg

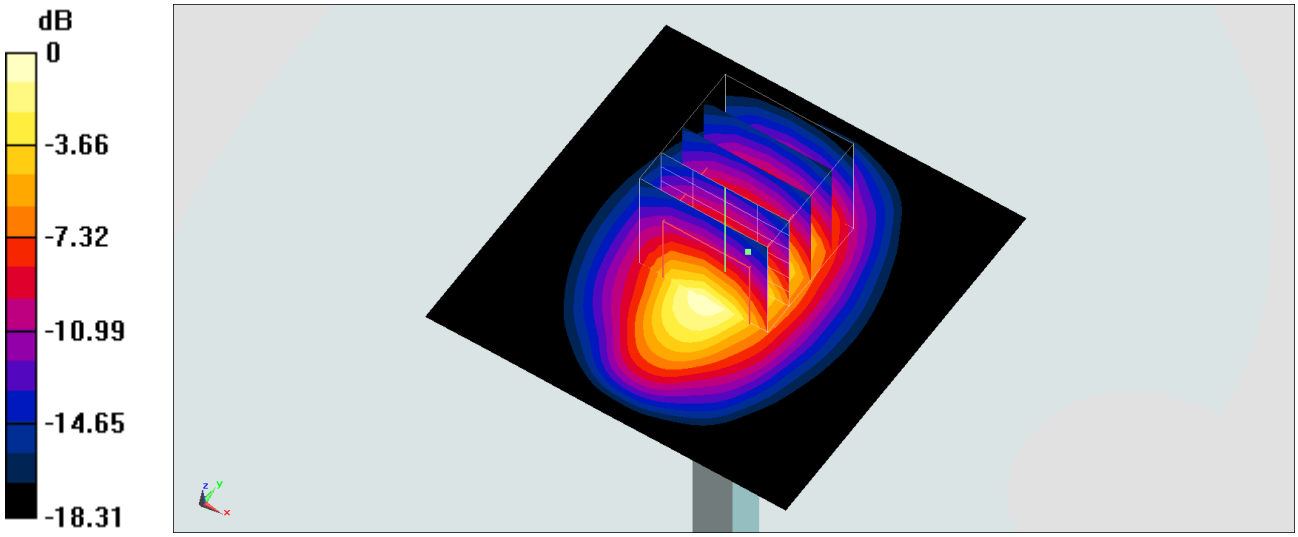

0 dB = 14.5 W/kg = 11.61 dBW/kg

System Check_Head_2450MHz

DUT: D2450V2-736

Communication System: CW; Frequency: 2450 MHz;Duty Cycle: 1:1
Medium: HSL_2450_181110 Medium parameters used: f = 2450 MHz; σ = 1.782 S/m; ε_r = 39.438; ρ = 1000 kg/m^3
Ambient Temperature：23.4 ℃; Liquid Temperature：22.4 ℃

DASY5 Configuration
- Probe: EX3DV4 - SN3931;ConvF(7.54, 7.54, 7.54) ;Calibrated: 2018/9/27
- Sensor-Surface: 1.4mm (Mechanical Surface Detection)
- Electronics: DAE4 Sn910; Calibrated: 2018/6/21
- Phantom: SAM_Left; Type: QD000P40CD; Serial: S/N:1801
- Measurement SW: DASY52, Version 52.10 (1); SEMCAD X Version 14.6.11 (7439)

Pin=250mW/Area Scan (71x71x1): Interpolated grid: dx=1.200 mm, dy=1.200 mm
Maximum value of SAR (interpolated) = 22.7 W/kg

Pin=250mW/Zoom Scan (7x7x7)/Cube 0: Measurement grid: dx=5mm, dy=5mm, dz=5mm
Reference Value = 111.8 V/m; Power Drift = 0.02 dB
Peak SAR (extrapolated) = 27.5 W/kg
SAR(1 g) = 13.2 W/kg; SAR(10 g) = 6.06 W/kg
Maximum value of SAR (measured) = 22.3 W/kg

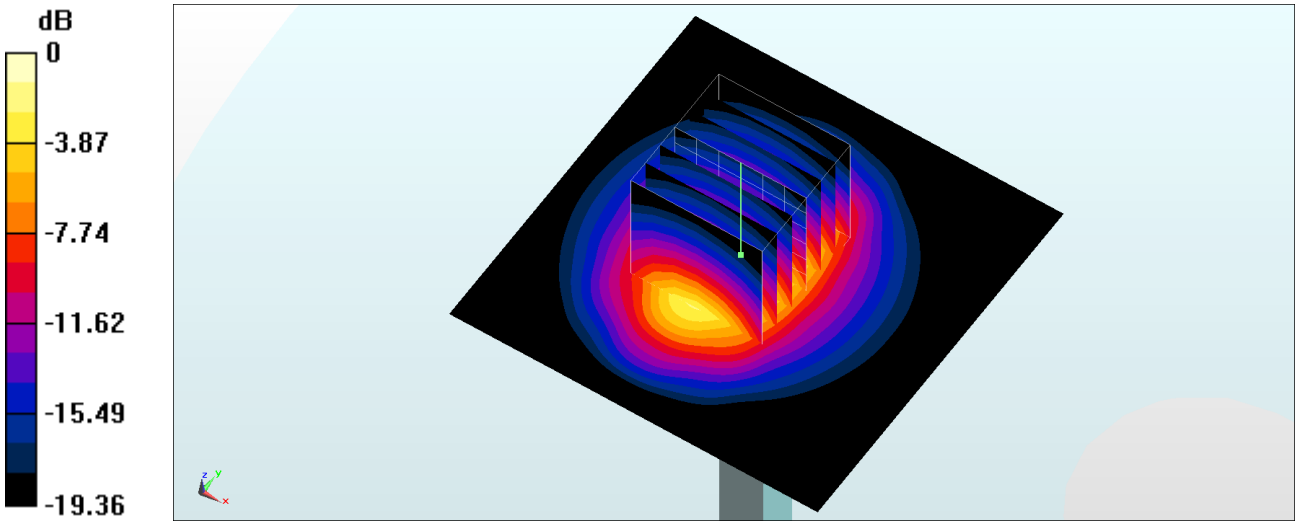

0 dB = 22.3 W/kg = 13.48 dBW/kg

System Check_Head_2450MHz

DUT: D2450V2-736

Communication System: CW; Frequency: 2450 MHz;Duty Cycle: 1:1
Medium: HSL_2450_181204 Medium parameters used: f = 2450 MHz; σ = 1.792 S/m; ε_r = 40.066; ρ = 1000 kg/m^3
Ambient Temperature：23.3 ℃;?Liquid Temperature：22.3 ℃

DASY5 Configuration:
- Probe: EX3DV4 - SN3976; ConvF(7.75, 7.75, 7.75) ; Calibrated: 2018/1/23
- Sensor-Surface: 1.4mm (Mechanical Surface Detection)
- Electronics: DAE4 Sn1424; Calibrated: 2018/1/18
- Phantom: SAM_Left; Type: QD000P40CD; Serial: TP:1477
- Measurement SW: DASY52, Version 52.10 (1);SEMCAD X Version 14.6.11 (7439)

Pin=250mW/Area Scan (61x61x1): Interpolated grid: dx=1.200 mm, dy=1.200 mm
Maximum value of SAR (interpolated) = 18.3 W/kg

Pin=250mW/Zoom Scan (7x7x7)/Cube 0: Measurement grid: dx=5mm, dy=5mm, dz=5mm
Reference Value = 102.7 V/m; Power Drift = 0.01 dB
Peak SAR (extrapolated) = 24.5 W/kg
SAR(1 g) = 12 W/kg; SAR(10 g) = 5.54 W/kg
Maximum value of SAR (measured) = 18.3 W/kg

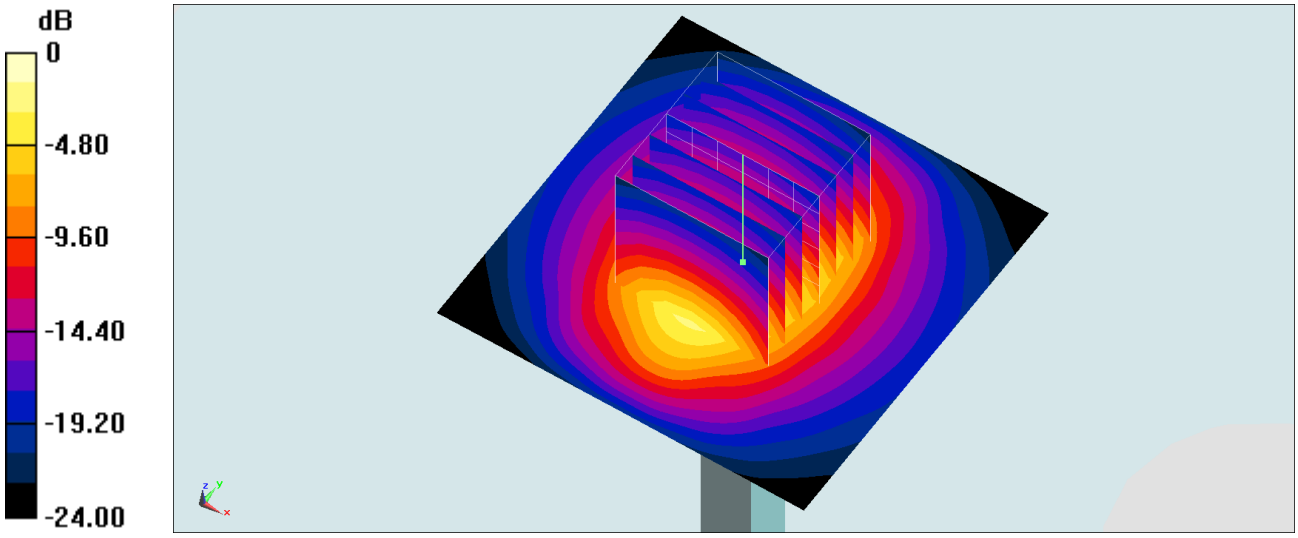

0 dB = 18.3 W/kg = 12.62 dBW/kg

System Check_Body_2450MHz

DUT: D2450V2-736

Communication System: CW; Frequency: 2450 MHz;Duty Cycle: 1:1
Medium: MSL_2450_181110 Medium parameters used: f = 2450 MHz; σ = 1.978 S/m; ε_r = 52.652; ρ = 1000 kg/m^3
Ambient Temperature：23.5 ℃; Liquid Temperature：22.5 ℃

DASY5 Configuration
- Probe: EX3DV4 - SN3931;ConvF(7.56, 7.56, 7.56) ;Calibrated: 2018/9/27
- Sensor-Surface: 1.4mm (Mechanical Surface Detection)
- Electronics: DAE4 Sn910; Calibrated: 2018/6/21
- Phantom: SAM_Right; Type: QD000P40CD; Serial: S/N:1796
- Measurement SW: DASY52, Version 52.10 (1); SEMCAD X Version 14.6.11 (7439)

Pin=250mW/Area Scan (61x61x1): Interpolated grid: dx=1.200 mm, dy=1.200 mm
Maximum value of SAR (interpolated) = 22.7 W/kg

Pin=250mW/Zoom Scan (7x7x7)/Cube 0: Measurement grid: dx=5mm, dy=5mm, dz=5mm
Reference Value = 110.4 V/m; Power Drift = -0.00 dB
Peak SAR (extrapolated) = 27.8 W/kg
SAR(1 g) = 13.8 W/kg; SAR(10 g) = 6.52 W/kg
Maximum value of SAR (measured) = 22.7 W/kg

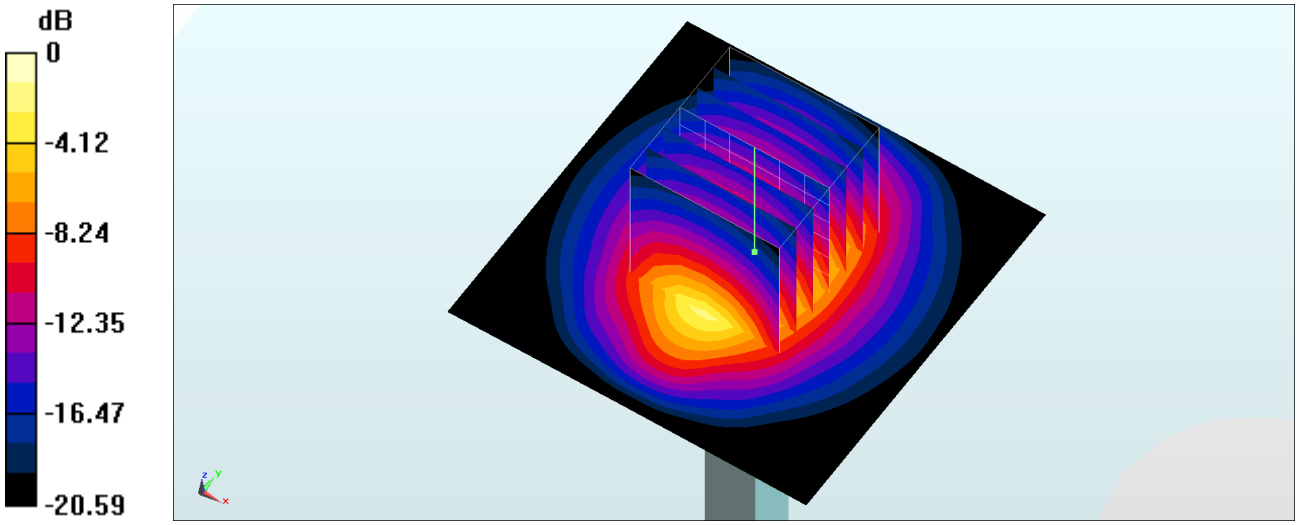

0 dB = 22.7 W/kg = 13.56 dBW/kg

System Check_Head_2600MHz

DUT: D2600V2-1008

Communication System: CW; Frequency: 2600 MHz;Duty Cycle: 1:1
Medium: HSL_2600_181208 Medium parameters used: f = 2600 MHz; σ = 2.029 S/m; ε_r = 38.538; ρ = 1000 kg/m^3
Ambient Temperature：23.6 ℃;?Liquid Temperature：22.6 ℃

DASY5 Configuration
- Probe: ES3DV3 - SN3270;ConvF(4.43, 4.43, 4.43) ;Calibrated: 2018/9/24
- Sensor-Surface: 3mm (Mechanical Surface Detection)
- Electronics: DAE4 Sn1326; Calibrated: 2018/9/18
- Phantom: Twin-SAM V5.0 (30deg probe tilt); Type: QD 000 P40 CD; Serial: 1885
- Measurement SW: DASY52, Version 52.10 (2); SEMCAD X Version 14.6.12 (7450)

Pin=250mW/Area Scan (81x81x1): Interpolated grid: dx=1.200 mm, dy=1.200 mm
Maximum value of SAR (interpolated) = 23.0 W/kg

Pin=250mW/Zoom Scan (7x7x7)/Cube 0: Measurement grid: dx=5mm, dy=5mm, dz=5mm
Reference Value = 115.6 V/m; Power Drift = -0.09 dB
Peak SAR (extrapolated) = 30.9 W/kg
SAR(1 g) = 14.2 W/kg; SAR(10 g) = 6.3 W/kg
Maximum value of SAR (measured) = 22.2 W/kg

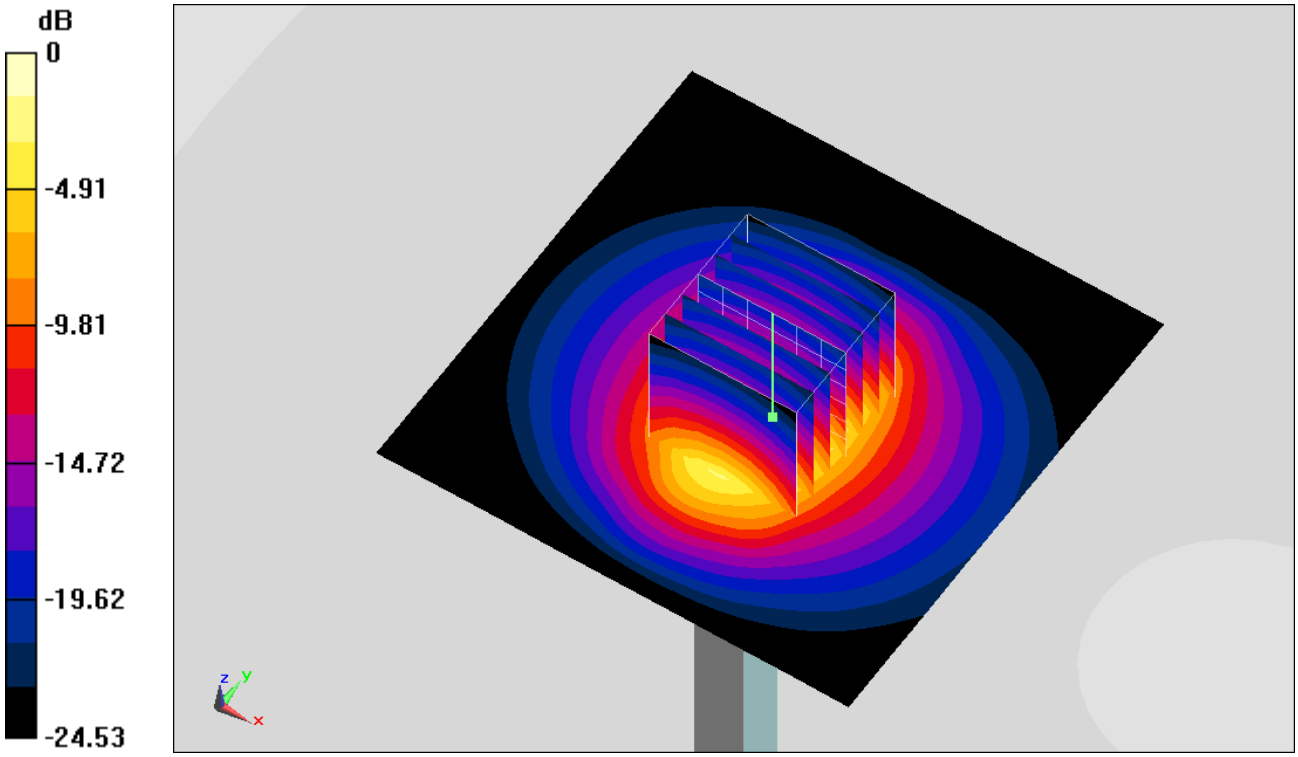

0 dB = 22.2 W/kg = 13.46 dBW/kg

System Check_Head_2600MHz

DUT: D2600V2-1008

Communication System: CW; Frequency: 2600 MHz;Duty Cycle: 1:1
Medium: HSL_2600_181213 Medium parameters used: f = 2600 MHz; σ = 2.013 S/m; ε_r = 38.427; ρ = 1000 kg/m^3
Ambient Temperature：23.5 ℃; Liquid Temperature：22.5 ℃

DASY5 Configuration
- Probe: ES3DV3 - SN3270;ConvF(4.43, 4.43, 4.43) ;Calibrated: 2018/9/24
- Sensor-Surface: 3mm (Mechanical Surface Detection)
- Electronics: DAE4 Sn853; Calibrated: 2018/7/24
- Phantom: Twin-SAM V5.0 (30deg probe tilt); Type: QD 000 P40 CD; Serial: 1885
- Measurement SW: DASY52, Version 52.10 (2); SEMCAD X Version 14.6.12 (7450)

Pin=250mW/Area Scan (81x81x1): Interpolated grid: dx=1.200 mm, dy=1.200 mm
Maximum value of SAR (interpolated) = 22.7 W/kg

Pin=250mW/Zoom Scan (7x7x7)/Cube 0: Measurement grid: dx=5mm, dy=5mm, dz=5mm
Reference Value = 115.3 V/m; Power Drift = -0.19 dB
Peak SAR (extrapolated) = 30.5 W/kg
SAR(1 g) = 14 W/kg; SAR(10 g) = 6.22 W/kg
Maximum value of SAR (measured) = 21.9 W/kg

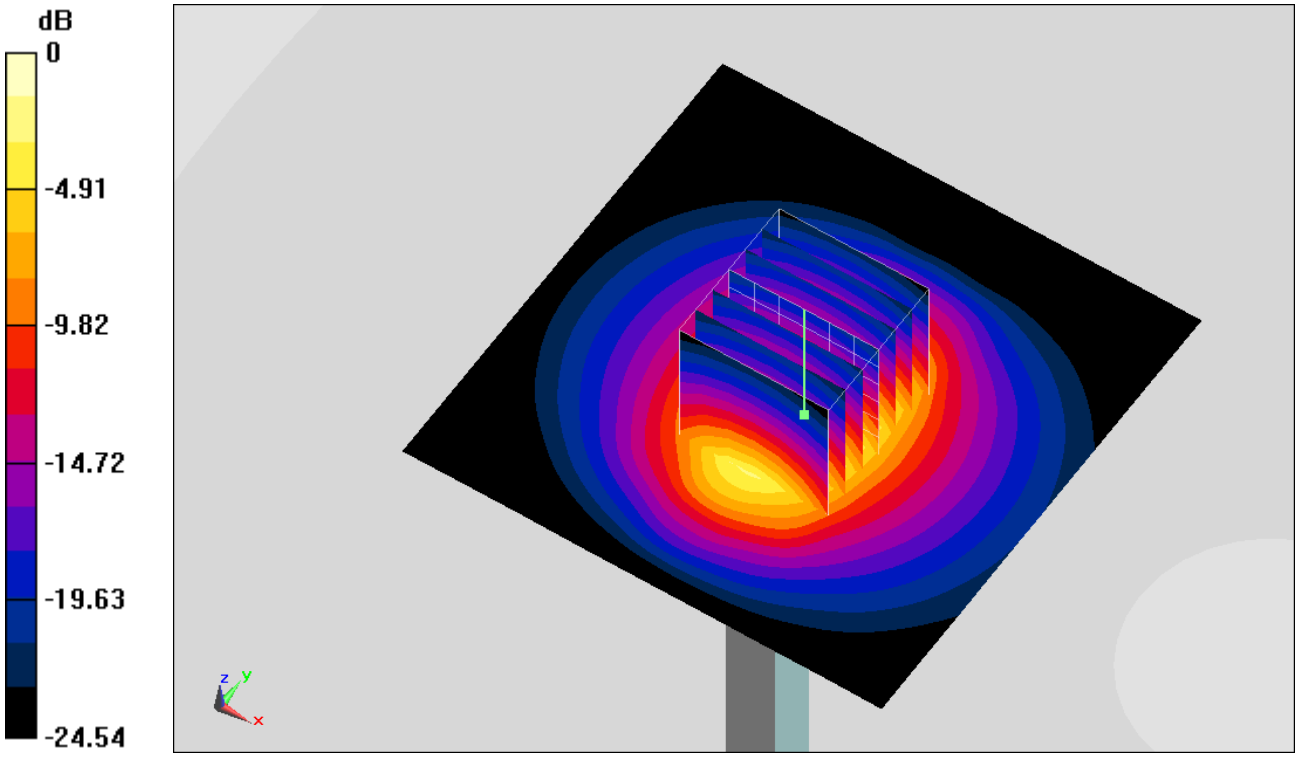

0 dB = 21.9 W/kg = 13.40 dBW/kg

System Check_Body_2600MHz

DUT: D2600V2-1008

Communication System: CW; Frequency: 2600 MHz;Duty Cycle: 1:1
Medium: MSL_2600_181209 Medium parameters used: f = 2600 MHz; σ = 2.175 S/m; ε_r = 51.888; ρ = 1000 kg/m^3
Ambient Temperature：23.2 ℃; Liquid Temperature：22.2 ℃

DASY5 Configuration:
- Probe: ES3DV3 - SN3270;ConvF(4.24, 4.24, 4.24) ;Calibrated: 2018/9/24
- Sensor-Surface: 3mm (Mechanical Surface Detection)
- Electronics: DAE4 Sn1326; Calibrated: 2018/9/18
- Phantom: Twin-SAM V5.0 (30deg probe tilt); Type: QD 000 P40 CD; Serial: 1885
- Measurement SW: DASY52, Version 52.10 (2); SEMCAD X Version 14.6.12 (7450)

Pin=250mW/Area Scan (71x71x1): Interpolated grid: dx=1.200 mm, dy=1.200 mm
Maximum value of SAR (interpolated) = 19.6 W/kg

Pin=250mW/Zoom Scan (7x7x7)/Cube 0: Measurement grid: dx=5mm, dy=5mm, dz=5mm
Reference Value = 96.44 V/m; Power Drift = -0.05 dB
Peak SAR (extrapolated) = 29.8 W/kg
SAR(1 g) = 14.1 W/kg; SAR(10 g) = 6.29 W/kg
Maximum value of SAR (measured) = 18.8 W/kg

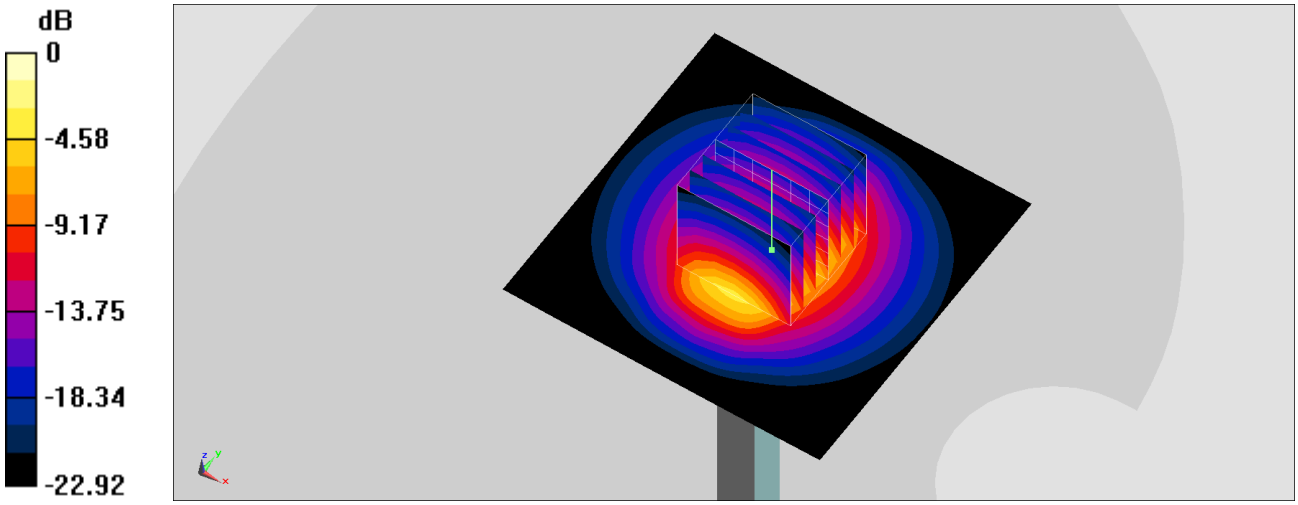

0 dB = 18.8 W/kg = 12.74 dBW/kg

System Check_Body_2600MHz

DUT: D2600V2-1008

Communication System: CW; Frequency: 2600 MHz;Duty Cycle: 1:1
Medium: MSL_2600_181211 Medium parameters used: f = 2600 MHz; σ = 2.14 S/m; ε_r = 51.642; ρ = 1000 kg/m^3
Ambient Temperature：23.8 ℃; Liquid Temperature：22.8 ℃

DASY5 Configuration
- Probe: EX3DV4 - SN7515;ConvF(7.48, 7.48, 7.48) ;Calibrated: 2018/10/3
- Sensor-Surface: 1.4mm (Mechanical Surface Detection)
- Electronics: DAE4 Sn854; Calibrated: 2018/6/14
- Phantom: Twin-SAM V5.0 (30deg probe tilt); Type: QD 000 P40 CD; Serial: 1885
- Measurement SW: DASY52, Version 52.10 (2); SEMCAD X Version 14.6.12 (7450)

Pin=250mW/Area Scan (81x81x1): Interpolated grid: dx=1.200 mm, dy=1.200 mm
Maximum value of SAR (interpolated) = 24.5 W/kg

Pin=250mW/Zoom Scan (7x7x7)/Cube 0: Measurement grid: dx=5mm, dy=5mm, dz=5mm
Reference Value = 108.7 V/m; Power Drift = 0.11 dB
Peak SAR (extrapolated) = 31.1 W/kg
SAR(1 g) = 14.2 W/kg; SAR(10 g) = 6.28 W/kg
Maximum value of SAR (measured) = 24.6 W/kg

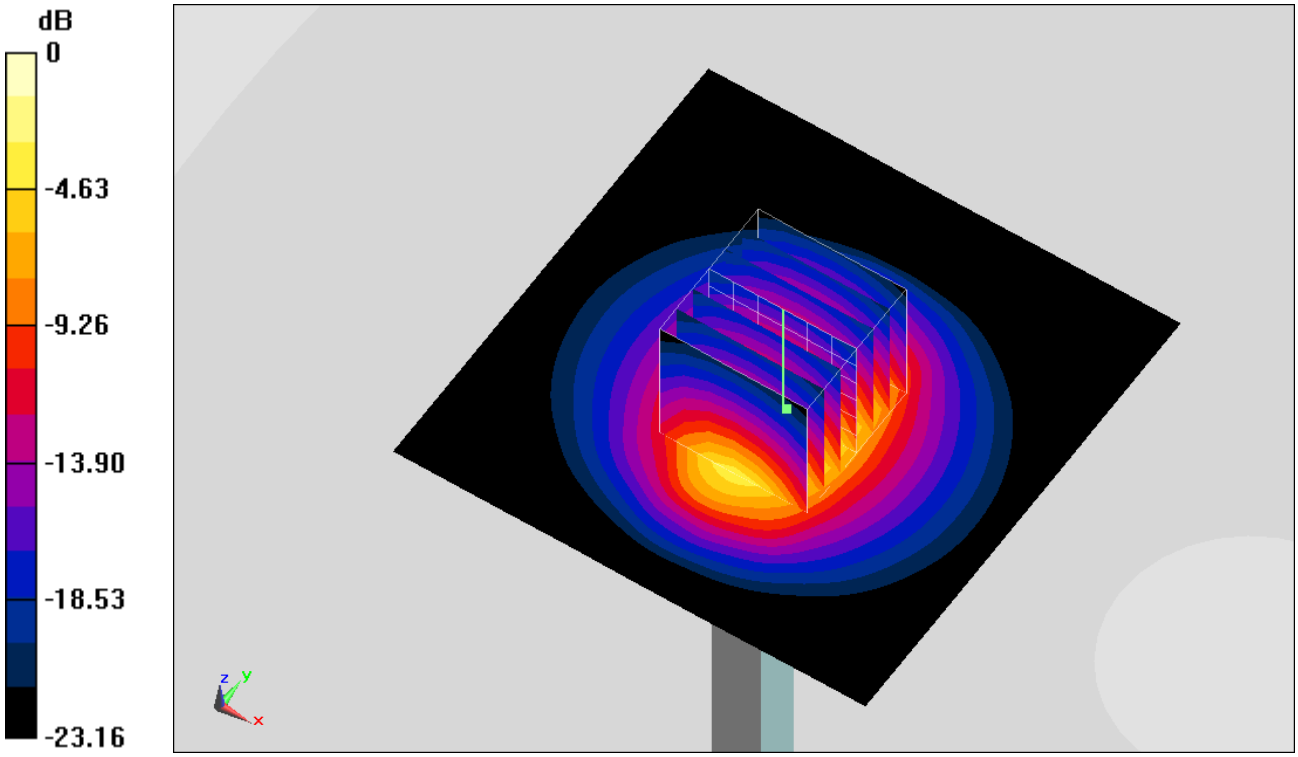

0 dB = 24.6 W/kg = 13.91 dBW/kg

System Check_Body_2600MHz

DUT: D2600V2-1008

Communication System: CW; Frequency: 2600 MHz;Duty Cycle: 1:1
Medium: MSL_2600_181211 Medium parameters used: f = 2600 MHz; σ = 2.14 S/m; ε_r = 51.642; ρ = 1000 kg/m^3
Ambient Temperature：23.8 ℃; Liquid Temperature：22.8 ℃

DASY5 Configuration
- Probe: ES3DV3 - SN3169;ConvF(4.27, 4.27, 4.27) ;Calibrated: 2018/5/28
- Sensor-Surface: 3mm (Mechanical Surface Detection)
- Electronics: DAE4 Sn853; Calibrated: 2018/7/24
- Phantom: Twin-SAM V5.0 (30deg probe tilt); Type: QD 000 P40 CD; Serial: 1885
- Measurement SW: DASY52, Version 52.10 (2); SEMCAD X Version 14.6.12 (7450)

Pin=250mW/Area Scan (61x61x1): Interpolated grid: dx=1.200 mm, dy=1.200 mm
Maximum value of SAR (interpolated) = 19.7 W/kg

Pin=250mW/Zoom Scan (7x7x7)/Cube 0: Measurement grid: dx=5mm, dy=5mm, dz=5mm
Reference Value = 95.89 V/m; Power Drift = 0.07 dB
Peak SAR (extrapolated) = 34.0 W/kg
SAR(1 g) = 14.7 W/kg; SAR(10 g) = 6.45 W/kg
Maximum value of SAR (measured) = 19.7 W/kg

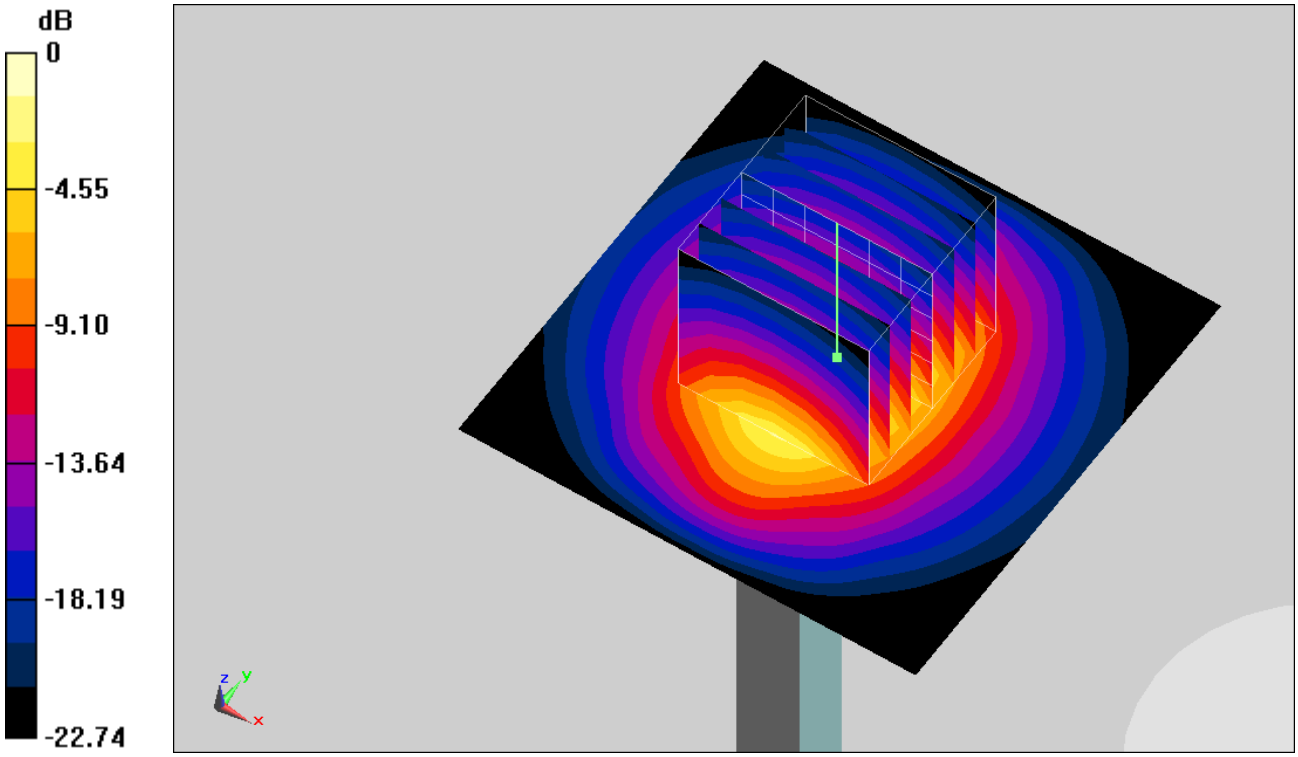

0 dB = 19.7 W/kg = 12.94 dBW/kg

System Check_Head_5250MHz

DUT: D5GHzV2-1006

Communication System: CW; Frequency: 5250 MHz;Duty Cycle: 1:1
Medium: HSL_5G_181204 Medium parameters used: f = 5250 MHz; σ = 4.519 S/m; ε_r = 35.521; ρ = 1000 kg/m^3
Ambient Temperature：23.3 ℃; Liquid Temperature：22.3 ℃

DASY5 Configuration:
- Probe: EX3DV4 - SN3976; ConvF(5.56, 5.56, 5.56) ; Calibrated: 2018/1/23
- Sensor-Surface: 1.4mm (Mechanical Surface Detection)
- Electronics: DAE4 Sn1424; Calibrated: 2018/1/18
- Phantom: SAM_Right; Type: SAM; Serial: TP:1479
- Measurement SW: DASY52, Version 52.10 (1);SEMCAD X Version 14.6.11 (7439)

Pin=100mW/Area Scan (71x71x1): Interpolated grid: dx=1.000 mm, dy=1.000 mm
Maximum value of SAR (interpolated) = 18.4 W/kg

Pin=100mW/Zoom Scan (7x7x7)/Cube 0: Measurement grid: dx=4mm, dy=4mm, dz=1.4mm
Reference Value = 62.61 V/m; Power Drift = 0.13 dB
Peak SAR (extrapolated) = 32.3 W/kg
SAR(1 g) = 7.47 W/kg; SAR(10 g) = 2.15 W/kg
Maximum value of SAR (measured) = 19.2 W/kg

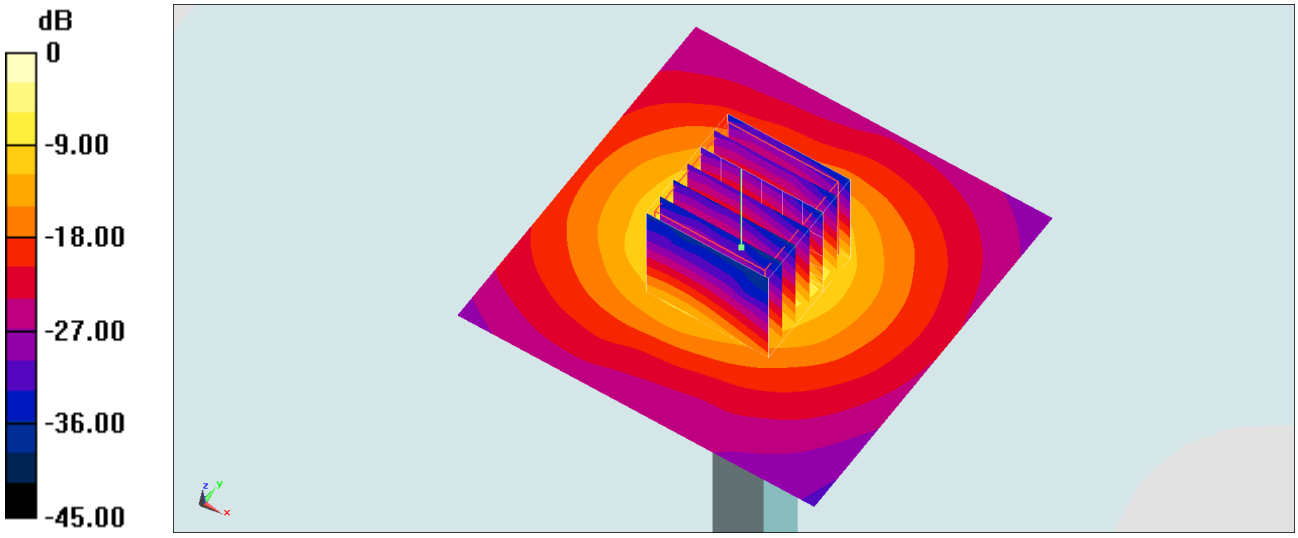

0 dB = 19.2 W/kg = 12.83 dBW/kg

System Check_Body_5250MHz

DUT: D5GHzV2-1006

Communication System: CW; Frequency: 5250 MHz;Duty Cycle: 1:1
Medium: MSL_5G_181115 Medium parameters used : f = 5250 MHz; σ = 5.4 S/m; ε_r = 47.561; ρ = 1000 kg/m^3
Ambient Temperature：23.7 ℃; Liquid Temperature：22.7 ℃

DASY5 Configuration:
- Probe: EX3DV4 - SN3976; ConvF(4.92, 4.92, 4.92) ; Calibrated: 2018/1/23
- Sensor-Surface: 1.4mm (Mechanical Surface Detection)
- Electronics: DAE4 Sn1424; Calibrated: 2018/1/18
- Phantom: SAM_Right; Type: SAM; Serial: TP:1479
- Measurement SW: DASY52, Version 52.10 (1);SEMCAD X Version 14.6.11 (7439)

Pin=100mW/Area Scan (71x71x1): Interpolated grid: dx=1.000 mm, dy=1.000 mm
Maximum value of SAR (interpolated) = 18.0 W/kg

Pin=100mW/Zoom Scan (7x7x7)/Cube 0: Measurement grid: dx=4mm, dy=4mm, dz=1.4mm
Reference Value = 64.27 V/m; Power Drift = -0.08 dB
Peak SAR (extrapolated) = 34.0 W/kg
SAR(1 g) = 7.41 W/kg; SAR(10 g) = 2.07 W/kg
Maximum value of SAR (measured) = 19.4 W/kg

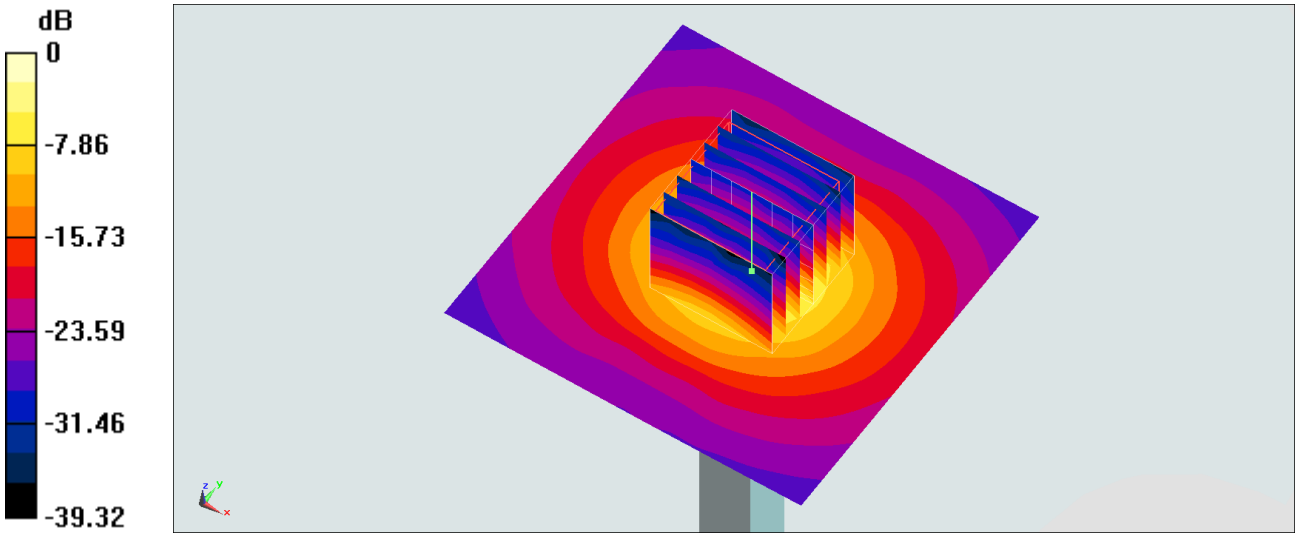

0 dB = 19.4 W/kg = 12.88 dBW/kg

System Check_Body_5250MHz

DUT: D5GHzV2-1006

Communication System: CW; Frequency: 5250 MHz;Duty Cycle: 1:1
Medium: MSL_5G_181207 Medium parameters used: f = 5250 MHz; σ = 5.407 S/m; ε_r = 48.97; ρ = 1000 kg/m^3
Ambient Temperature：23.5 ℃;Liquid Temperature：22.5 ℃

DASY5 Configuration:
- Probe: EX3DV4 - SN3976; ConvF(4.92, 4.92, 4.92) ; Calibrated: 2018/1/23
- Sensor-Surface: 1.4mm (Mechanical Surface Detection)
- Electronics: DAE4 Sn1424; Calibrated: 2018/1/18
- Phantom: SAM_Left; Type: QD000P40CD; Serial: TP:1477
- Measurement SW: DASY52, Version 52.10 (1);SEMCAD X Version 14.6.11 (7439)

Pin=100mW/Area Scan (71x71x1): Interpolated grid: dx=1.000 mm, dy=1.000 mm
Maximum value of SAR (interpolated) = 19.7 W/kg

Pin=100mW/Zoom Scan (7x7x7)/Cube 0: Measurement grid: dx=4mm, dy=4mm, dz=1.4mm
Reference Value = 52.40 V/m; Power Drift = -0.12 dB
Peak SAR (extrapolated) = 35.4 W/kg
SAR(1 g) = 7.87 W/kg; SAR(10 g) = 2.11 W/kg
Maximum value of SAR (measured) = 20.1 W/kg

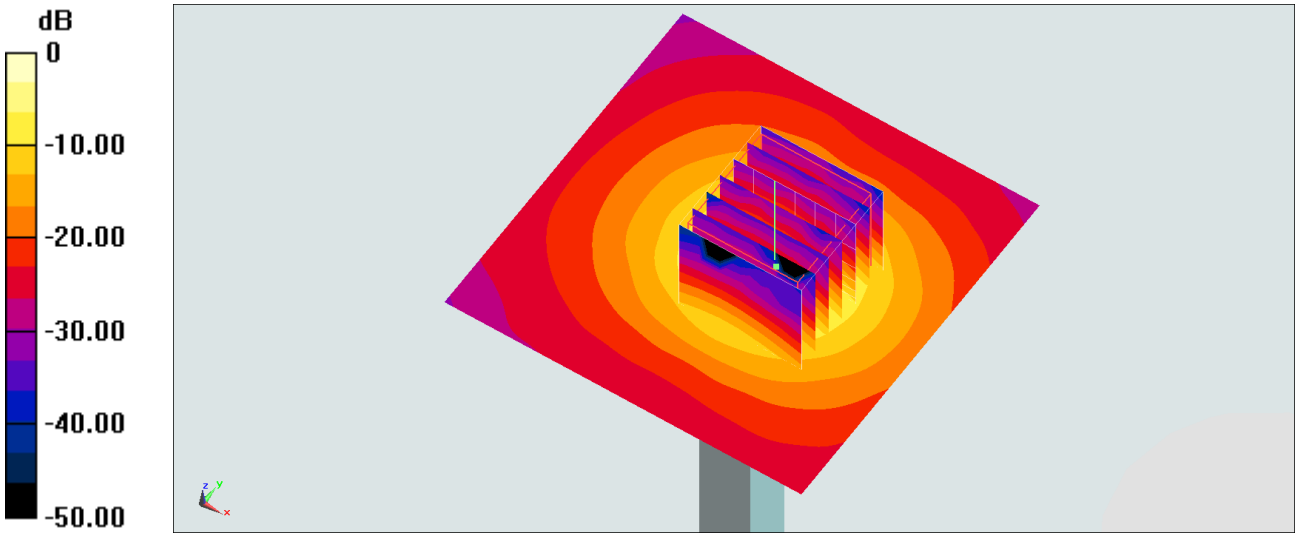

0 dB = 20.1 W/kg = 13.03 dBW/kg

System Check_Body_5250MHz_190104

DUT: D5GHzV2-1006

Communication System: CW; Frequency: 5250 MHz;Duty Cycle: 1:1
Medium: MSL_5G_190104 Medium parameters used: f = 5250 MHz; σ = 5.366 S/m; ε_r = 48.637; ρ = 1000 kg/m^3
Ambient Temperature：23.6 ℃; Liquid Temperature：22.6 ℃

DASY5 Configuration:
- Probe: EX3DV4 - SN3931; ConvF(4.4, 4.4, 4.4) ; Calibrated: 2018/9/27
- Sensor-Surface: 1.4mm (Mechanical Surface Detection)
- Electronics: DAE4 Sn1326; Calibrated: 2018/9/18
- Phantom: SAM_Left; Type: QD000P40CD; Serial: TP:1477
- Measurement SW: DASY52, Version 52.10 (1);SEMCAD X Version 14.6.11 (7439)

Pin=100mW/Area Scan (71x71x1): Interpolated grid: dx=1.000 mm, dy=1.000 mm
Maximum value of SAR (interpolated) = 18.5 W/kg

Pin=100mW/Zoom Scan (7x7x7)/Cube 0: Measurement grid: dx=4mm, dy=4mm, dz=1.4mm
Reference Value = 68.42 V/m; Power Drift = -0.18 dB
Peak SAR (extrapolated) = 32.2 W/kg
SAR(1 g) = 7.78 W/kg; SAR(10 g) = 2.18 W/kg
Maximum value of SAR (measured) = 20.0 W/kg

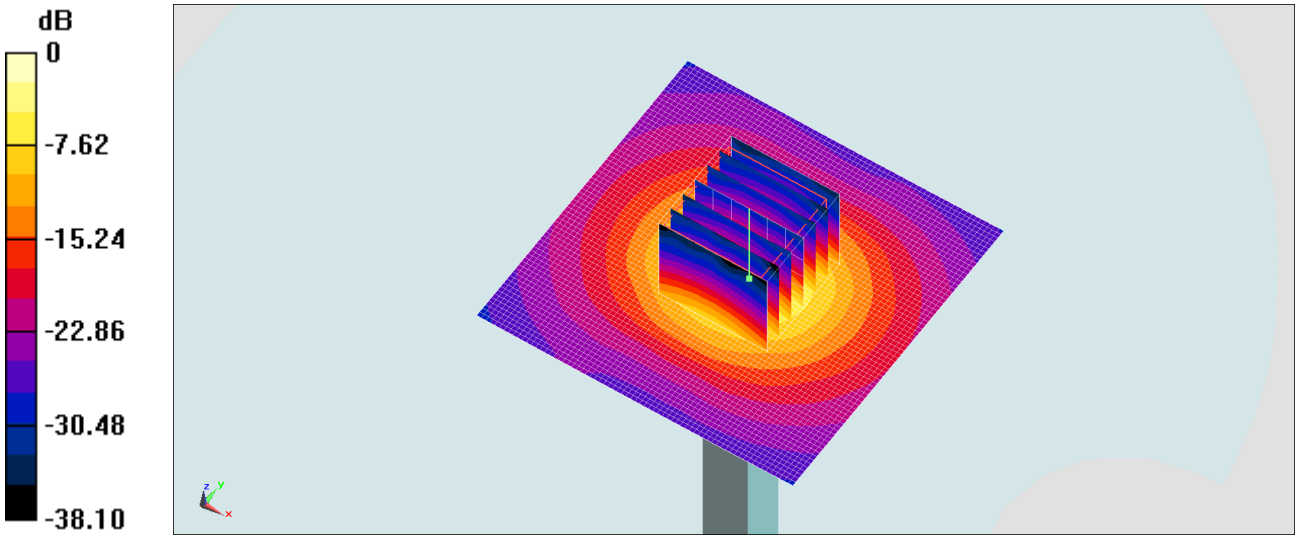

0 dB = 20.0 W/kg = 13.01 dBW/kg

System Check_Head_5600MHz

DUT: D5GHzV2-1006

Communication System: CW; Frequency: 5600 MHz;Duty Cycle: 1:1
Medium: HSL_5G_181204 Medium parameters used: f = 5600 MHz; σ = 4.869 S/m; ε_r = 35.036; ρ = 1000 kg/m^3
Ambient Temperature：23.3 ℃; Liquid Temperature：22.3 ℃

DASY5 Configuration:
- Probe: EX3DV4 - SN3976; ConvF(4.97, 4.97, 4.97); Calibrated: 2018/1/23
- Sensor-Surface: 1.4mm (Mechanical Surface Detection)
- Electronics: DAE4 Sn1424; Calibrated: 2018/1/18
- Phantom: SAM_Right; Type: SAM; Serial: TP:1479
- Measurement SW: DASY52, Version 52.10 (1);SEMCAD X Version 14.6.11 (7439)

Pin=100mW/Area Scan (71x71x1): Interpolated grid: dx=1.000 mm, dy=1.000 mm
Maximum value of SAR (interpolated) = 18.9 W/kg

Pin=100mW/Zoom Scan (7x7x7)/Cube 0: Measurement grid: dx=4mm, dy=4mm, dz=1.4mm
Reference Value = 66.72 V/m; Power Drift = -0.15 dB
Peak SAR (extrapolated) = 33.8 W/kg
SAR(1 g) = 7.67 W/kg; SAR(10 g) = 2.19 W/kg
Maximum value of SAR (measured) = 19.6 W/kg

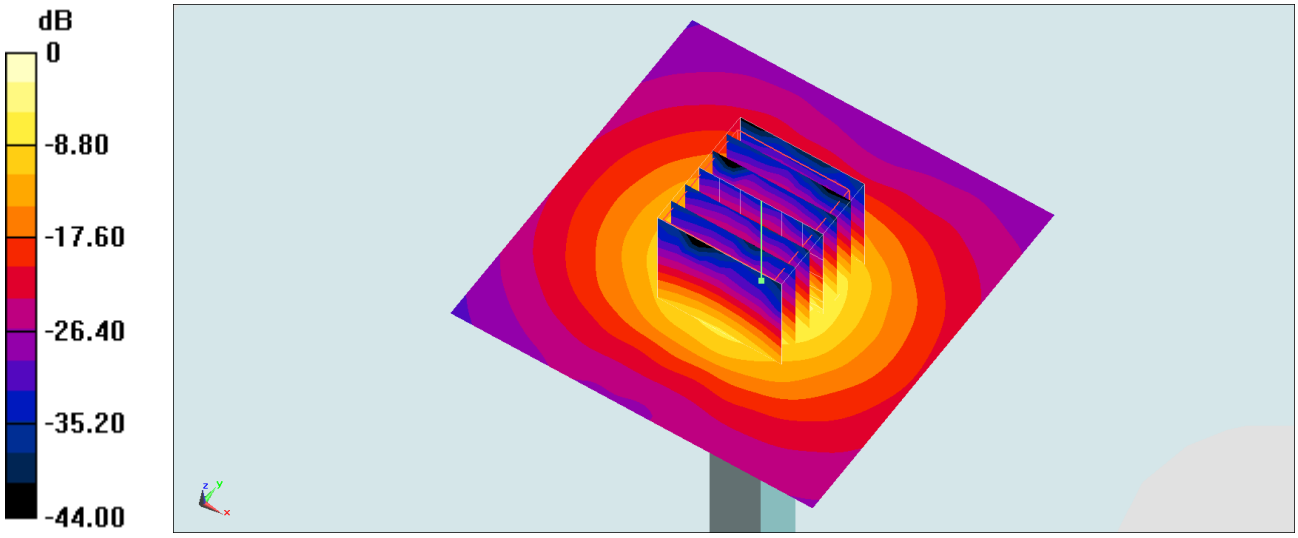

0 dB = 19.6 W/kg = 12.92 dBW/kg

System Check_Body_5600MHz

DUT: D5GHzV2-1006

Communication System: CW; Frequency: 5600 MHz;Duty Cycle: 1:1
Medium: MSL_5G_181115 Medium parameters used: f = 5600 MHz; σ = 5.855 S/m; ε_r = 47.008; ρ = 1000 kg/m^3
Ambient Temperature：23.7 ℃; Liquid Temperature：22.7 ℃

DASY5 Configuration:
- Probe: EX3DV4 - SN3976; ConvF(4.28, 4.28, 4.28) ; Calibrated: 2018/1/23
- Sensor-Surface: 1.4mm (Mechanical Surface Detection)
- Electronics: DAE4 Sn1424; Calibrated: 2018/1/18
- Phantom: SAM_Right; Type: SAM; Serial: TP:1479
- Measurement SW: DASY52, Version 52.10 (1);SEMCAD X Version 14.6.11 (7439)

Pin=100mW/Area Scan (71x71x1): Interpolated grid: dx=1.000 mm, dy=1.000 mm
Maximum value of SAR (interpolated) = 19.6 W/kg

Pin=100mW/Zoom Scan (7x7x7)/Cube 0: Measurement grid: dx=4mm, dy=4mm, dz=1.4mm
Reference Value = 65.05 V/m; Power Drift = -0.05 dB
Peak SAR (extrapolated) = 37.7 W/kg
SAR(1 g) = 7.73 W/kg; SAR(10 g) = 2.13 W/kg
Maximum value of SAR (measured) = 20.7 W/kg

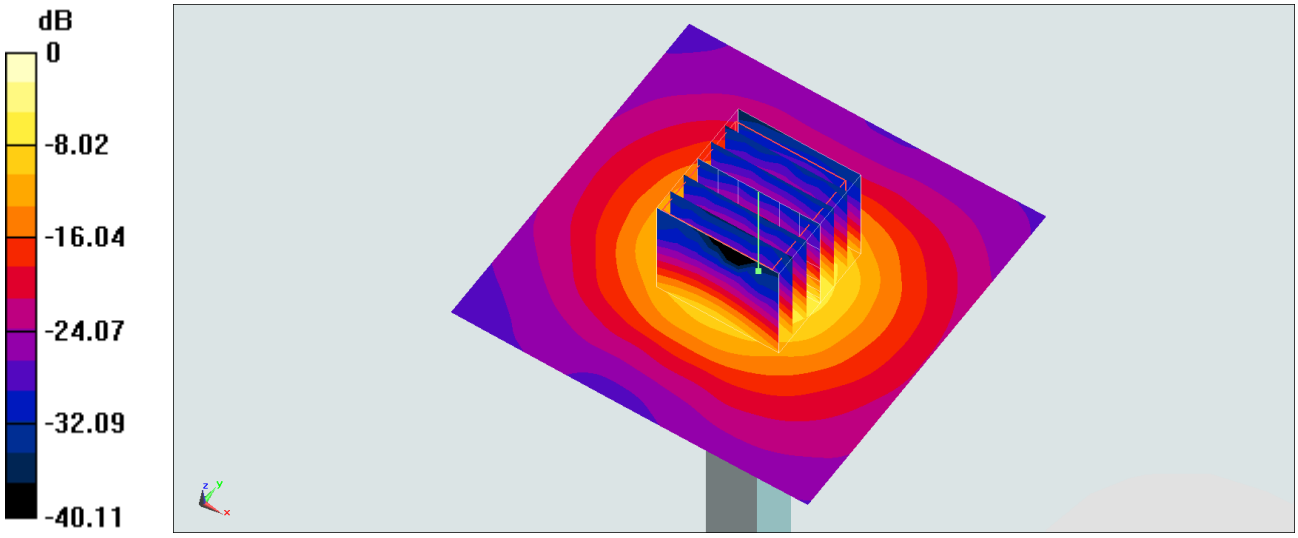

0 dB = 20.7 W/kg = 13.16 dBW/kg

System Check_Body_5600MHz

DUT: D5GHzV2-1006

Communication System: CW; Frequency: 5600 MHz;Duty Cycle: 1:1
Medium: MSL_5G_181207 Medium parameters used: f = 5600 MHz; σ = 5.79 S/m; ε_r = 48.482; ρ = 1000 kg/m^3
Ambient Temperature：23.5 ℃;?Liquid Temperature：22.5 ℃

DASY5 Configuration:
- Probe: EX3DV4 - SN3976; ConvF(4.28, 4.28, 4.28) ; Calibrated: 2018/1/23
- Sensor-Surface: 1.4mm (Mechanical Surface Detection)
- Electronics: DAE4 Sn1424; Calibrated: 2018/1/18
- Phantom: SAM_Left; Type: QD000P40CD; Serial: TP:1477
- Measurement SW: DASY52, Version 52.10 (1);SEMCAD X Version 14.6.11 (7439)

Pin=100mW/Area Scan (71x71x1): Interpolated grid: dx=1.000 mm, dy=1.000 mm
Maximum value of SAR (interpolated) = 19.9 W/kg

Pin=100mW/Zoom Scan (7x7x7)/Cube 0: Measurement grid: dx=4mm, dy=4mm, dz=1.4mm
Reference Value = 41.65 V/m; Power Drift = 0.08 dB
Peak SAR (extrapolated) = 37.3 W/kg
SAR(1 g) = 8.12 W/kg; SAR(10 g) = 2.25 W/kg
Maximum value of SAR (measured) = 21.1 W/kg

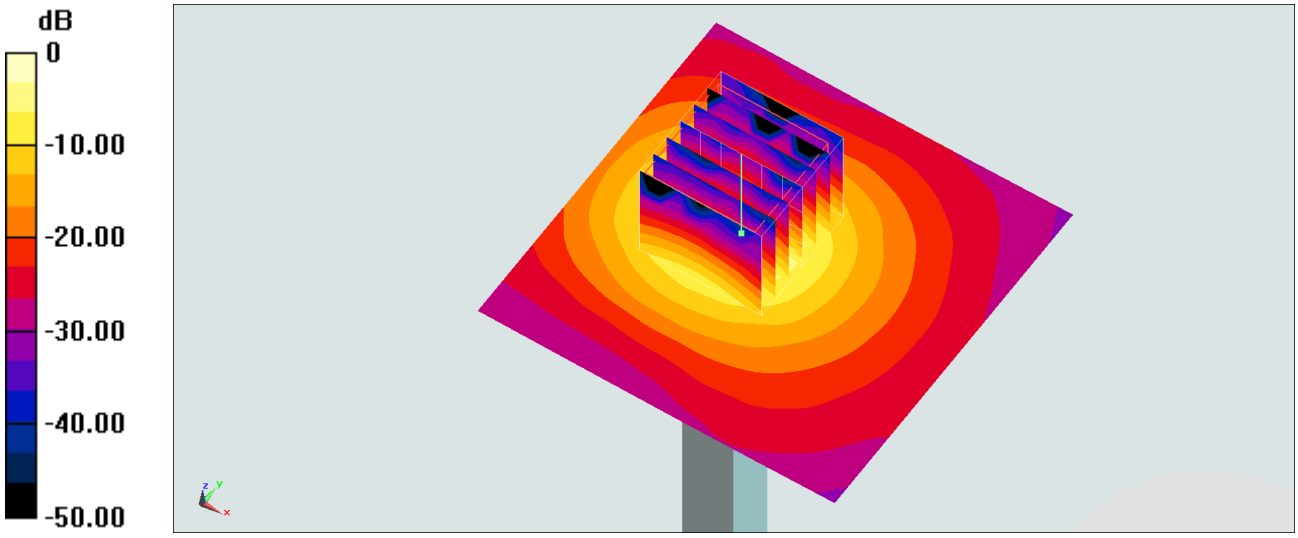

0 dB = 21.1 W/kg = 13.24 dBW/kg

System Check_Body_5600MHz_190104

DUT: D5GHzV2-1006

Communication System: CW; Frequency: 5600 MHz;Duty Cycle: 1:1
Medium: MSL_5G_190104 Medium parameters used: f = 5600 MHz; σ = 5.747 S/m; ε_r = 48.149; ρ = 1000 kg/m^3
Ambient Temperature：23.6 ℃; Liquid Temperature：22.6 ℃

DASY5 Configuration:
- Probe: EX3DV4 - SN3931; ConvF(3.82, 3.82, 3.82) ; Calibrated: 2018/9/27
- Sensor-Surface: 1.4mm (Mechanical Surface Detection)
- Electronics: DAE4 Sn1326; Calibrated: 2018/9/18
- Phantom: SAM_Left; Type: QD000P40CD; Serial: TP:1477
- Measurement SW: DASY52, Version 52.10 (1);SEMCAD X Version 14.6.11 (7439)

Pin=100mW/Area Scan (71x71x1): Interpolated grid: dx=1.000 mm, dy=1.000 mm
Maximum value of SAR (interpolated) = 20.6 W/kg

Pin=100mW/Zoom Scan (7x7x7)/Cube 0: Measurement grid: dx=4mm, dy=4mm, dz=1.4mm
Reference Value = 69.34 V/m; Power Drift = -0.17 dB
Peak SAR (extrapolated) = 37.3 W/kg
SAR(1 g) = 8.2 W/kg; SAR(10 g) = 2.26 W/kg
Maximum value of SAR (measured) = 21.7 W/kg

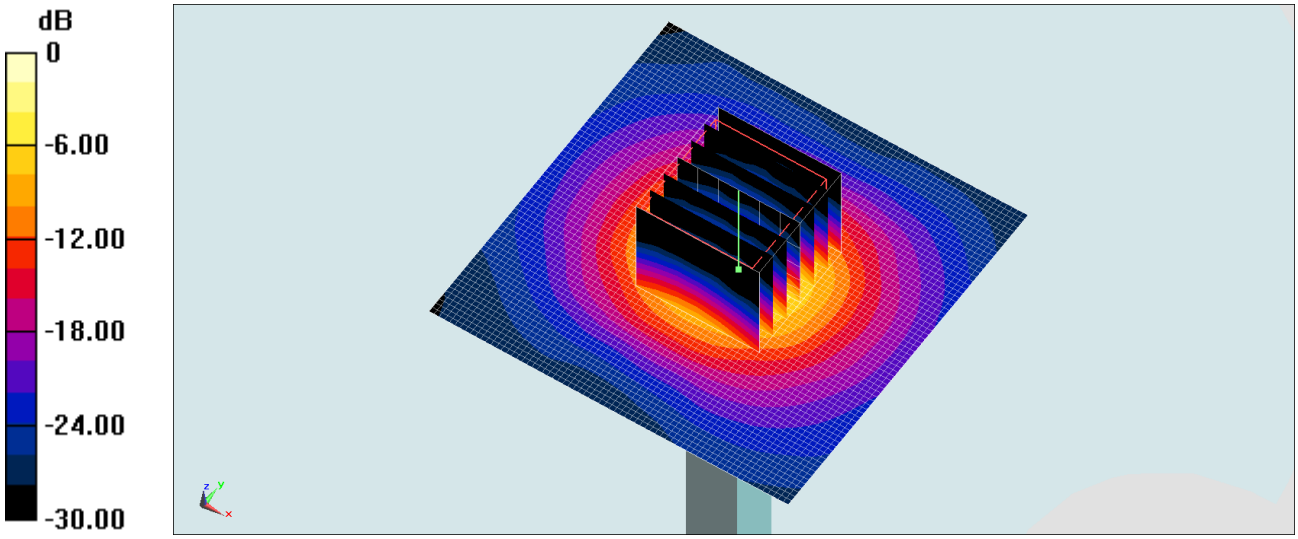

0 dB = 21.7 W/kg = 13.36 dBW/kg

System Check_Head_5750MHz

DUT: D5GHzV2-1006

Communication System: CW; Frequency: 5750 MHz;Duty Cycle: 1:1
Medium: HSL_5G_181204 Medium parameters used: f = 5750 MHz; σ = 5.023 S/m; ε_r = 34.832; ρ = 1000 kg/m^3
Ambient Temperature：23.3 ℃; Liquid Temperature：22.3 ℃

DASY5 Configuration:
- Probe: EX3DV4 - SN3976; ConvF(5.04, 5.04, 5.04); Calibrated: 2018/1/23
- Sensor-Surface: 1.4mm (Mechanical Surface Detection)
- Electronics: DAE4 Sn1424; Calibrated: 2018/1/18
- Phantom: SAM_Right; Type: SAM; Serial: TP:1479
- Measurement SW: DASY52, Version 52.10 (1);SEMCAD X Version 14.6.11 (7439)

Pin=100mW/Area Scan (71x71x1): Interpolated grid: dx=1.000 mm, dy=1.000 mm
Maximum value of SAR (interpolated) = 19.1 W/kg

Pin=100mW/Zoom Scan (7x7x7)/Cube 0: Measurement grid: dx=4mm, dy=4mm, dz=1.4mm
Reference Value = 61.83 V/m; Power Drift = 0.16 dB
Peak SAR (extrapolated) = 35.2 W/kg
SAR(1 g) = 7.47 W/kg; SAR(10 g) = 2.09 W/kg
Maximum value of SAR (measured) = 18.9 W/kg

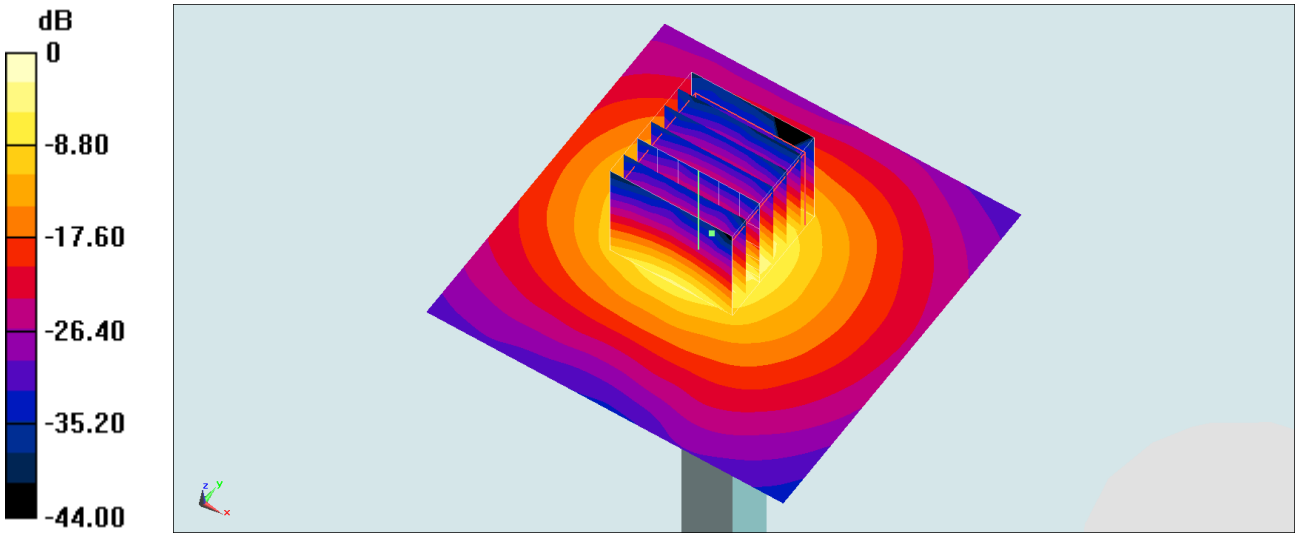

0 dB = 18.9 W/kg = 12.76 dBW/kg

System Check_Body_5750MHz

DUT: D5GHzV2-1006

Communication System: CW ; Frequency: 5750 MHz;Duty Cycle: 1:1
Medium: MSL_5G_181113 Medium parameters used: f = 5750 MHz; σ = 5.889 S/m; ε_r = 48.703; ρ = 1000 kg/m^3
Ambient Temperature：23.2 ℃; Liquid Temperature：22.2 ℃

DASY5 Configuration:
- Probe: EX3DV4 - SN3976; ConvF(4.46, 4.46, 4.46); Calibrated: 2018/1/23
- Sensor-Surface: 1.4mm (Mechanical Surface Detection)
- Electronics: DAE4 Sn1424; Calibrated: 2018/1/18
- Phantom: SAM_Right; Type: SAM; Serial: TP:1479
- Measurement SW: DASY52, Version 52.10 (1);SEMCAD X Version 14.6.11 (7439)

Pin=100mW/Area Scan (71x71x1): Interpolated grid: dx=1.000 mm, dy=1.000 mm
Maximum value of SAR (interpolated) = 19.5 W/kg

Pin=100mW/Zoom Scan (7x7x7)/Cube 0: Measurement grid: dx=4mm, dy=4mm, dz=1.4mm
Reference Value = 53.50 V/m; Power Drift = -0.05 dB
Peak SAR (extrapolated) = 37.0 W/kg
SAR(1 g) = 7.39 W/kg; SAR(10 g) = 2.02 W/kg
Maximum value of SAR (measured) = 19.6 W/kg

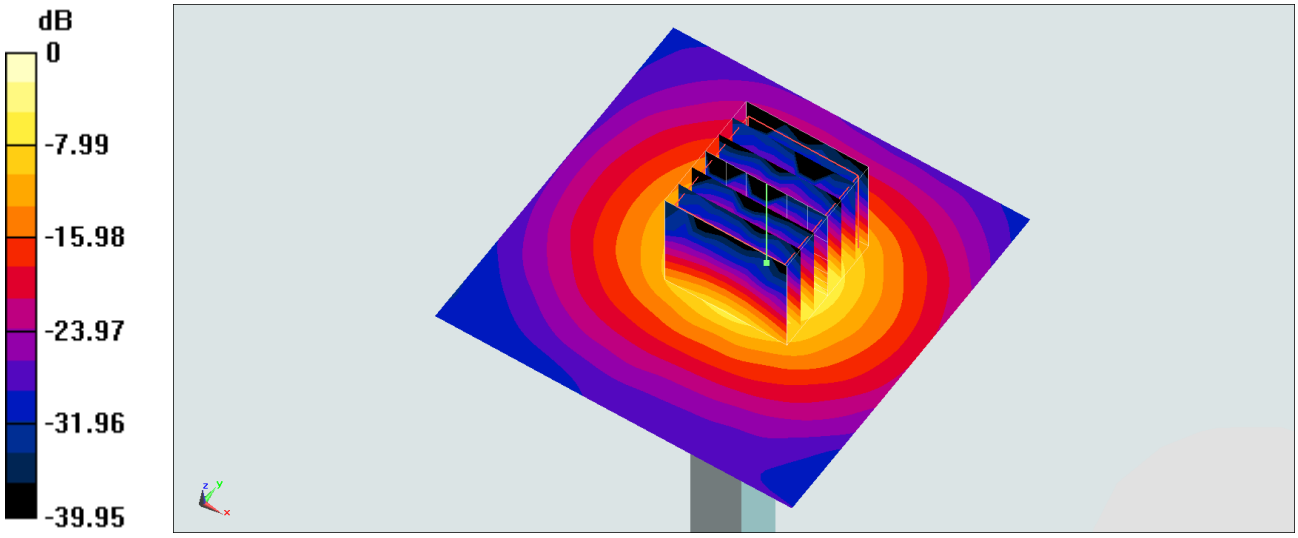

0 dB = 19.6 W/kg = 12.92 dBW/kg

System Check_Body_5750MHz

DUT: D5GHzV2-1006

Communication System: CW; Frequency: 5750 MHz;Duty Cycle: 1:1
Medium: MSL_5G_181115 Medium parameters used: f = 5750 MHz; σ = 6.051 S/m; ε_r = 46.734; ρ = 1000 kg/m^3
Ambient Temperature：23.7 ℃; Liquid Temperature：22.7 ℃

DASY5 Configuration:
- Probe: EX3DV4 - SN3976; ConvF(4.46, 4.46, 4.46) ; Calibrated: 2018/1/23
- Sensor-Surface: 1.4mm (Mechanical Surface Detection)
- Electronics: DAE4 Sn1424; Calibrated: 2018/1/18
- Phantom: SAM_Right; Type: SAM; Serial: TP:1479
- Measurement SW: DASY52, Version 52.10 (1);SEMCAD X Version 14.6.11 (7439)

Pin=100mW/Area Scan (71x71x1): Interpolated grid: dx=1.000 mm, dy=1.000 mm
Maximum value of SAR (interpolated) = 19.2 W/kg

Pin=100mW/Zoom Scan (7x7x7)/Cube 0: Measurement grid: dx=4mm, dy=4mm, dz=1.4mm
Reference Value = 65.96 V/m; Power Drift = -0.05 dB
Peak SAR (extrapolated) = 38.5 W/kg
SAR(1 g) = 7.82 W/kg; SAR(10 g) = 2.06 W/kg
Maximum value of SAR (measured) = 20.8 W/kg

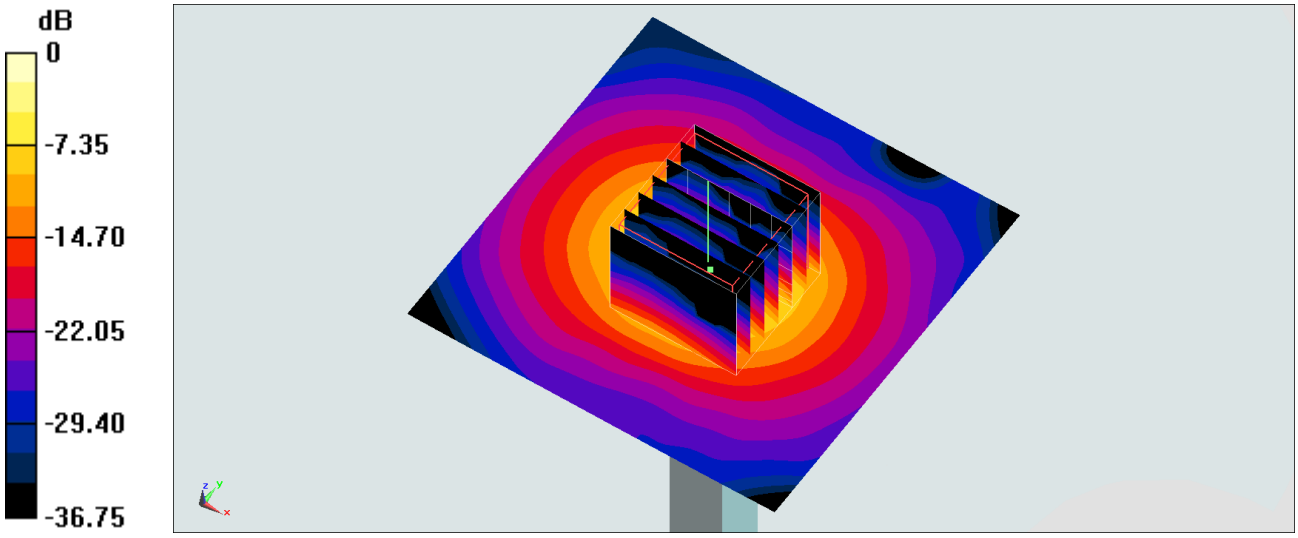

0 dB = 20.8 W/kg = 13.18 dBW/kg

System Check_Body_5750MHz

DUT: D5GHzV2-1006

Communication System: CW; Frequency: 5750 MHz;Duty Cycle: 1:1
Medium: MSL_5G_181207 Medium parameters used: f = 5750 MHz; σ = 5.95 S/m; ε_r = 48.279; ρ = 1000 kg/m^3
Ambient Temperature：23.5 ℃;?Liquid Temperature：22.5 ℃

DASY5 Configuration:
- Probe: EX3DV4 - SN3976; ConvF(4.46, 4.46, 4.46) ; Calibrated: 2018/1/23
- Sensor-Surface: 1.4mm (Mechanical Surface Detection)
- Electronics: DAE4 Sn1424; Calibrated: 2018/1/18
- Phantom: SAM_Left; Type: QD000P40CD; Serial: TP:1477
- Measurement SW: DASY52, Version 52.10 (1);SEMCAD X Version 14.6.11 (7439)

Pin=100mW/Area Scan (71x71x1): Interpolated grid: dx=1.000 mm, dy=1.000 mm
Maximum value of SAR (interpolated) = 18.3 W/kg

Pin=100mW/Zoom Scan (7x7x7)/Cube 0: Measurement grid: dx=4mm, dy=4mm, dz=1.4mm
Reference Value = 40.38 V/m; Power Drift = 0.12 dB
Peak SAR (extrapolated) = 35.9 W/kg
SAR(1 g) = 7.39 W/kg; SAR(10 g) = 2.05 W/kg
Maximum value of SAR (measured) = 19.7 W/kg

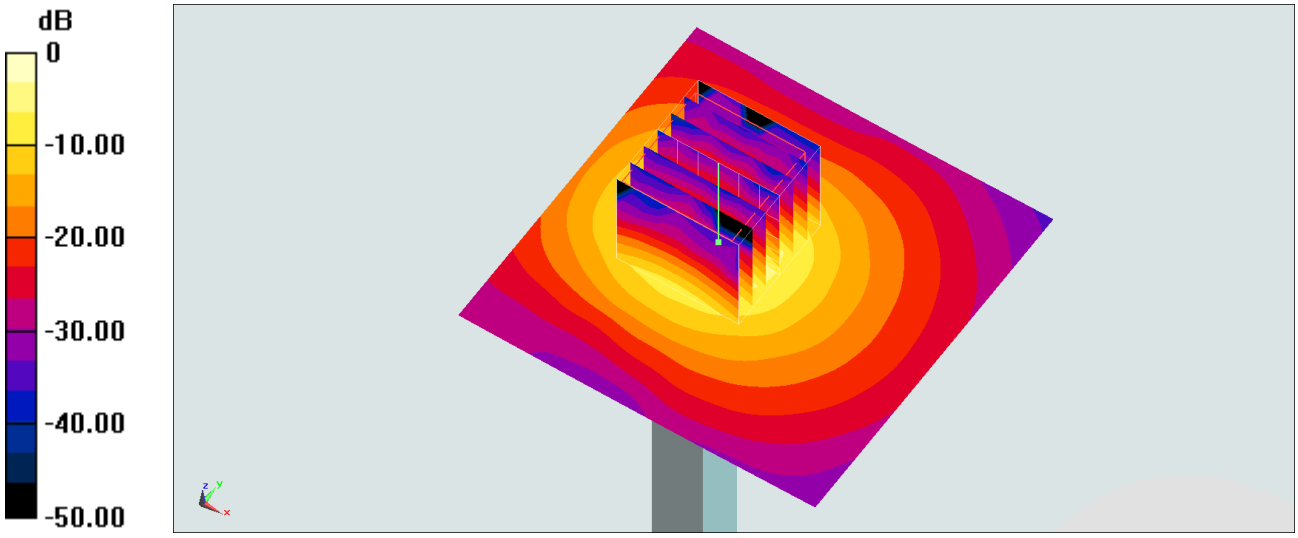

0 dB = 19.7 W/kg = 12.94 dBW/kg