#20_GSM850_GPRS (4 Tx slots)_Left Side_10mm_Ch189

Communication System: GSM850 ; Frequency: 836.4 MHz;Duty Cycle: 1:2.08
Medium: HSL_850_190502 Medium parameters used : f = 836.4 MHz; σ = 0.905 S/m; ε_r = 42.956; ρ = 1000 kg/m^3
Ambient Temperature：23.3 ℃; Liquid Temperature：22.3 ℃

DASY5 Configuration:
- Probe: ES3DV3 - SN3169; ConvF(6.39, 6.39, 6.39) @ 836.4 MHz; Calibrated: 2018/5/28
- Sensor-Surface: 3mm (Mechanical Surface Detection)
- Electronics: DAE4 Sn918; Calibrated: 2018/6/20
- Phantom: SAM_Left; Type: QD000P40CD; Serial: TP:1682
- Measurement SW: DASY52, Version 52.10 (2);SEMCAD X Version 14.6.12 (7450)

Area Scan (51x121x1): Interpolated grid: dx=1.500 mm, dy=1.500 mm
Maximum value of SAR (interpolated) = 0.919 W/kg

Zoom Scan (5x5x7)/Cube 0: Measurement grid: dx=8mm, dy=8mm, dz=5mm
Reference Value = 32.66 V/m; Power Drift = -0.11 dB
Peak SAR (extrapolated) = 1.23 W/kg
SAR(1 g) = 0.770 W/kg; SAR(10 g) = 0.481 W/kg
Maximum value of SAR (measured) = 0.896 W/kg

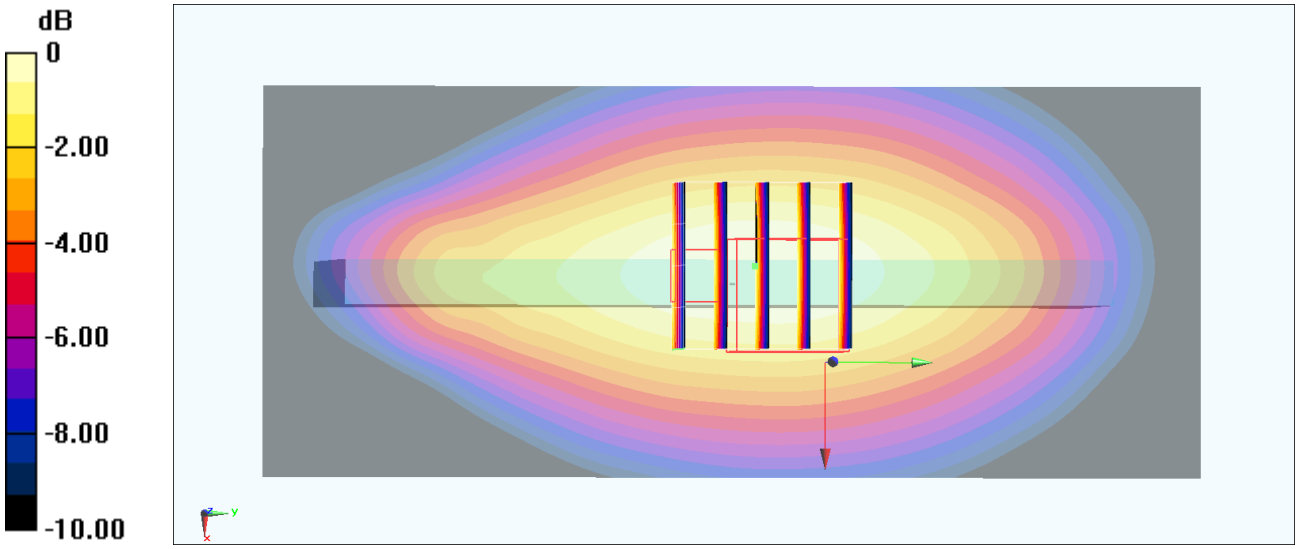

0 dB = 0.896 W/kg = -0.48 dBW/kg

#21_GSM1900_GPRS (4 Tx slots)_Top Side_10mm_Ch810

Communication System: PCS; Frequency: 1909.8 MHz;Duty Cycle: 1:2.08
Medium: HSL_1900_190621 Medium parameters used: f = 1910 MHz; σ = 1.458 S/m; ε_r = 38.918; ρ = 1000 kg/m^3
Ambient Temperature：23.1 ℃; Liquid Temperature：22.1 ℃

DASY5 Configuration:
- Probe: ES3DV3 - SN3270; ConvF(5.17, 5.17, 5.17) @ 1909.8 MHz; Calibrated: 2018/9/24
- Sensor-Surface: 3mm (Mechanical Surface Detection)
- Electronics: DAE3 Sn577; Calibrated: 2018/9/19
- Phantom: SAM-Middle; Type: SAM; Serial: 1796
- Measurement SW: DASY52, Version 52.10 (2);SEMCAD X Version 14.6.12 (7470)

Area Scan (41x71x1): Interpolated grid: dx=1.500 mm, dy=1.500 mm
Maximum value of SAR (interpolated) = 0.948 W/kg

Zoom Scan (5x5x7)/Cube 0: Measurement grid: dx=8mm, dy=8mm, dz=5mm
Reference Value = 26.16 V/m; Power Drift = -0.00 dB
Peak SAR (extrapolated) = 1.46 W/kg
SAR(1 g) = 0.796 W/kg; SAR(10 g) = 0.367 W/kg
Maximum value of SAR (measured) = 0.988 W/kg

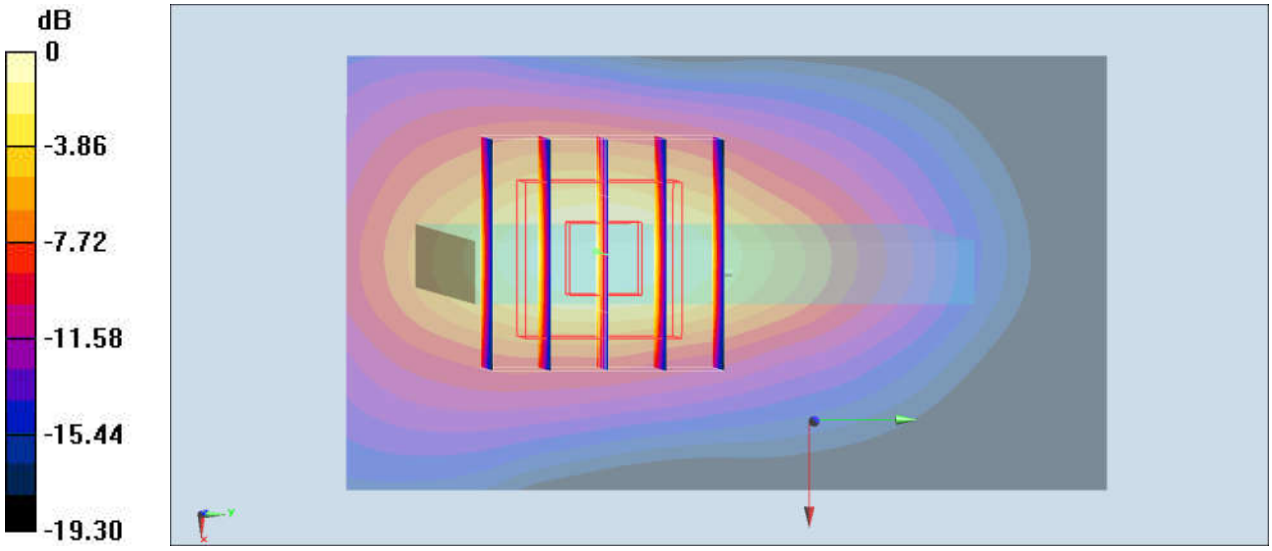

0 dB = 0.988 W/kg = -0.05 dBW/kg

Test Laboratory: Sporton International Inc. SAR/HAC Testing Lab Date: 2019/6/6

#22_WCDMA II_RMC 12.2Kbps_Bottom Side_10mm_Ch9538

Communication System: WCDMA; Frequency: 1907.6 MHz;Duty Cycle: 1:1
Medium: HSL_1900_190606 Medium parameters used: f = 1908 MHz; σ = 1.466 S/m; ε_r = 38.974; ρ = 1000 kg/m^3
Ambient Temperature：23.6 ℃; Liquid Temperature：22.6 ℃

DASY5 Configuration:
- Probe: ES3DV3 - SN3124; ConvF(4.95, 4.95, 4.95) @ 1907.6 MHz; Calibrated: 2019/1/15
- Sensor-Surface: 3mm (Mechanical Surface Detection)
- Electronics: DAE4 Sn316; Calibrated: 2019/1/3
- Phantom: SAM-Middle; Type: SAM; Serial: 1796
- Measurement SW: DASY52, Version 52.10 (2);SEMCAD X Version 14.6.12 (7450)

Area Scan (41x81x1): Interpolated grid: dx=1.500 mm, dy=1.500 mm
Maximum value of SAR (interpolated) = 1.18 W/kg

Zoom Scan (5x5x7)/Cube 0: Measurement grid: dx=8mm, dy=8mm, dz=5mm
Reference Value = 27.34 V/m; Power Drift = -0.04 dB
Peak SAR (extrapolated) = 1.53 W/kg
SAR(1 g) = 0.919 W/kg; SAR(10 g) = 0.527 W/kg
Maximum value of SAR (measured) = 1.11 W/kg

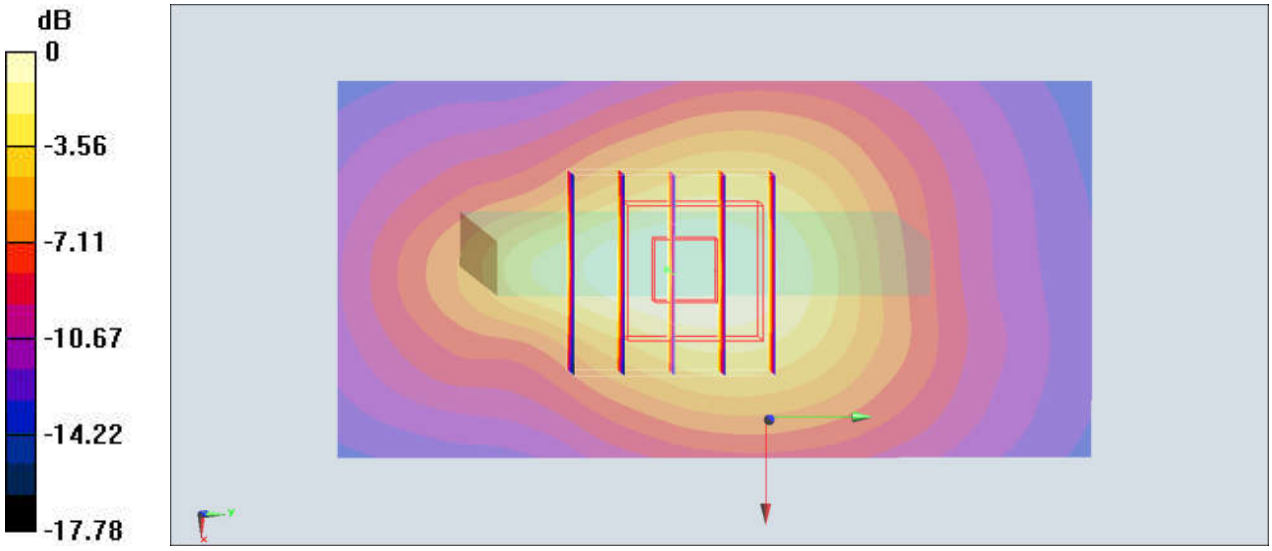

0 dB = 1.11 W/kg = 0.45 dBW/kg

Test Laboratory: Sporton International Inc. SAR/HAC Testing Lab Date: 2019/6/21

#23_WCDMA IV_RMC 12.2Kbps_Bottom Side_10mm_Ch1413

Communication System: WCDMA; Frequency: 1732.6 MHz;Duty Cycle: 1:1
Medium: HSL_1750_190621 Medium parameters used: f = 1733 MHz; σ = 1.324 S/m; ε_r = 39.613; ρ = 1000 kg/m^3
Ambient Temperature：23.1 ℃; Liquid Temperature：22.1 ℃

DASY5 Configuration:
- Probe: ES3DV3 - SN3270; ConvF(5.42, 5.42, 5.42) @ 1732.6 MHz; Calibrated: 2018/9/24
- Sensor-Surface: 3mm (Mechanical Surface Detection)
- Electronics: DAE3 Sn577; Calibrated: 2018/9/19
- Phantom: SAM-Middle; Type: SAM; Serial: 1796
- Measurement SW: DASY52, Version 52.10 (2);SEMCAD X Version 14.6.12 (7470)

Area Scan (41x71x1): Interpolated grid: dx=1.500 mm, dy=1.500 mm
Maximum value of SAR (interpolated) = 0.953 W/kg

Zoom Scan (5x5x7)/Cube 0: Measurement grid: dx=8mm, dy=8mm, dz=5mm
Reference Value = 28.90 V/m; Power Drift = 0.12 dB
Peak SAR (extrapolated) = 1.60 W/kg
SAR(1 g) = 0.901 W/kg; SAR(10 g) = 0.462 W/kg
Maximum value of SAR (measured) = 1.14 W/kg

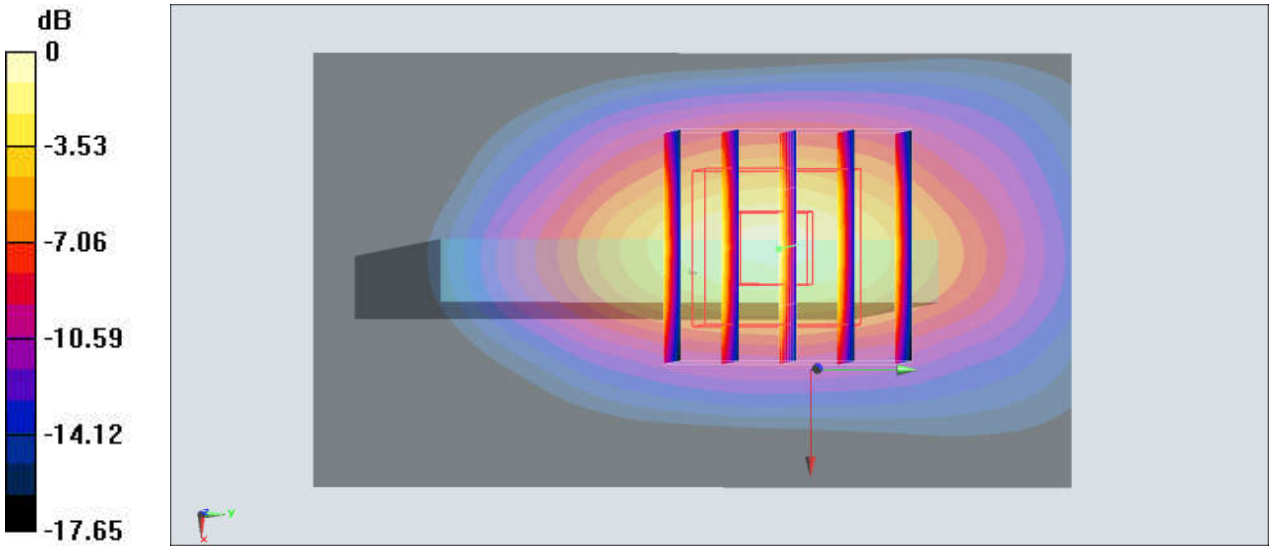

0 dB = 1.14 W/kg = 0.57 dBW/kg

#24_WCDMA V_RMC 12.2Kbps_Left Side_10mm_Ch4132

Communication System: WCDMA; Frequency: 826.4 MHz;Duty Cycle: 1:1
Medium: HSL_850_190430 Medium parameters used: f = 826.4 MHz; σ = 0.869 S/m; ε_r = 41.175; ρ = 1000 kg/m^3
Ambient Temperature：23.2 ℃; Liquid Temperature：22.2 ℃

DASY5 Configuration:
- Probe: EX3DV4 - SN3931; ConvF(10.07, 10.07, 10.07) @ 826.4 MHz; Calibrated: 2018/9/27
- Sensor-Surface: 1.4mm (Mechanical Surface Detection)
- Electronics: DAE4 Sn1399; Calibrated: 2018/11/16
- Phantom: SAM_Left; Type: QD000P40CD; Serial: TP:1682
- Measurement SW: DASY52, Version 52.10 (2);SEMCAD X Version 14.6.12 (7450)

Area Scan (41x111x1): Interpolated grid: dx=1.500 mm, dy=1.500 mm
Maximum value of SAR (interpolated) = 0.941 W/kg

Zoom Scan (5x5x7)/Cube 0: Measurement grid: dx=8mm, dy=8mm, dz=5mm
Reference Value = 34.67 V/m; Power Drift = -0.13 dB
Peak SAR (extrapolated) = 1.04 W/kg
SAR(1 g) = 0.677 W/kg; SAR(10 g) = 0.451 W/kg
Maximum value of SAR (measured) = 0.915 W/kg

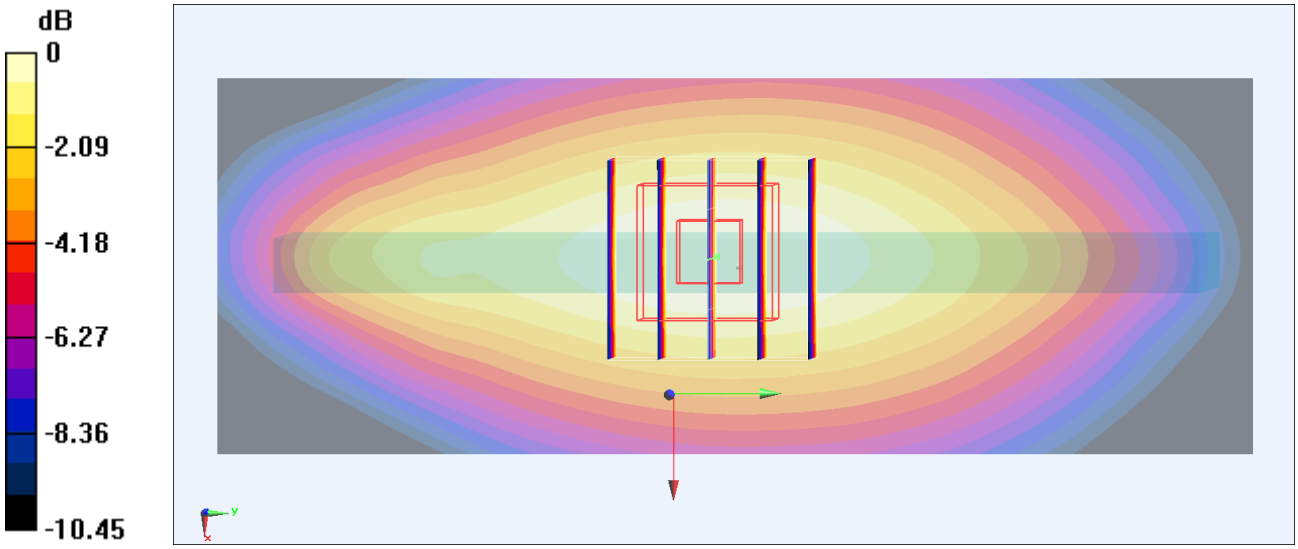

0 dB = 0.915 W/kg = -0.39 dBW/kg

Test Laboratory: Sporton International Inc. SAR/HAC Testing Lab Date: 2019/5/5

#25_LTE Band 4_20M_QPSK_1_0_Back_10mm_Ch20175

Communication System: LTE; Frequency: 1732.5 MHz;Duty Cycle: 1:1
Medium: HSL_1750_190505 Medium parameters used: f = 1733 MHz; σ = 1.351 S/m; ε_r = 39.76; ρ = 1000 kg/m^3
Ambient Temperature：23.1 ℃; Liquid Temperature：22.1 ℃

DASY5 Configuration:
- Probe: ES3DV3 - SN3169; ConvF(5.48, 5.48, 5.48) @ 1732.5 MHz; Calibrated: 2018/5/28
- Sensor-Surface: 3mm (Mechanical Surface Detection)
- Electronics: DAE3 Sn577; Calibrated: 2018/9/19
- Phantom: SAM_Left; Type: QD000P40CD; Serial: TP:1431
- Measurement SW: DASY52, Version 52.10 (2);SEMCAD X Version 14.6.12 (7450)

Area Scan (71x71x1): Interpolated grid: dx=1.500 mm, dy=1.500 mm
Maximum value of SAR (interpolated) = 0.626 W/kg

Zoom Scan (5x5x7)/Cube 0: Measurement grid: dx=8mm, dy=8mm, dz=5mm
Reference Value = 20.86 V/m; Power Drift = -0.06 dB
Peak SAR (extrapolated) = 0.805 W/kg
SAR(1 g) = 0.543 W/kg; SAR(10 g) = 0.355 W/kg
Maximum value of SAR (measured) = 0.623 W/kg

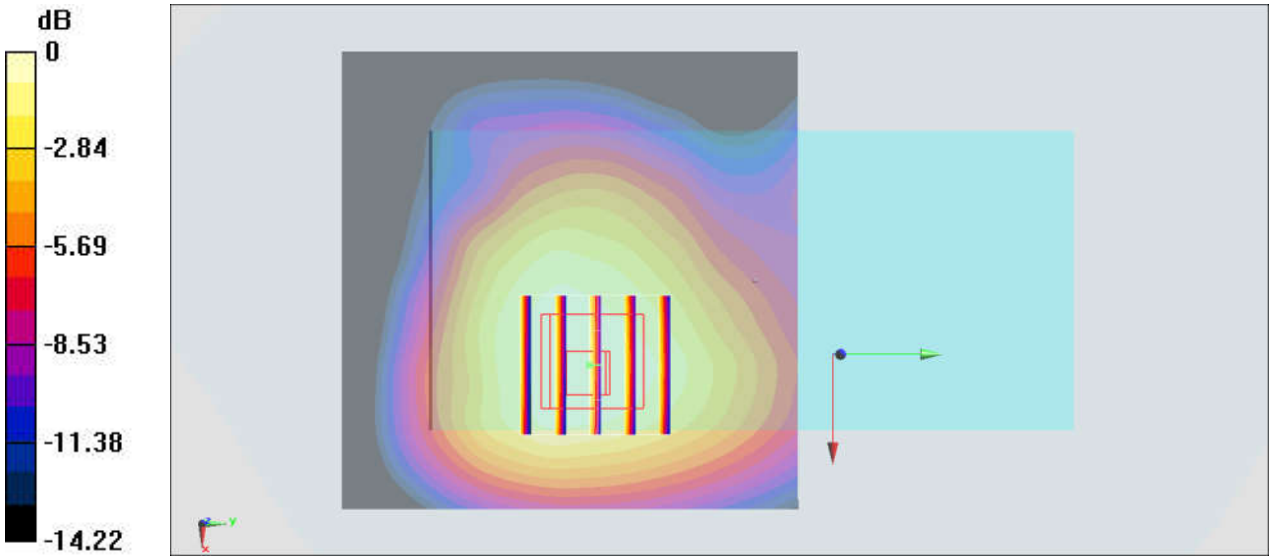

0 dB = 0.623 W/kg = -2.06 dBW/kg

Test Laboratory: Sporton International Inc. SAR/HAC Testing Lab Date: 2019/6/20

#26_LTE Band 7_20M_QPSK_100_0_Left Side_10mm_Ch21350

Communication System: LTE; Frequency: 2560 MHz;Duty Cycle: 1:1
Medium: HSL_2600_190620 Medium parameters used: f = 2560 MHz; σ = 1.916 S/m; ε_r = 38.363; ρ = 1000 kg/m^3
Ambient Temperature：23.3 ℃; Liquid Temperature：22.3 ℃

DASY5 Configuration:
- Probe: ES3DV3 - SN3270; ConvF(4.43, 4.43, 4.43) @ 2560 MHz; Calibrated: 2018/9/24
- Sensor-Surface: 3mm (Mechanical Surface Detection)
- Electronics: DAE3 Sn577; Calibrated: 2018/9/19
- Phantom: SAM-Right; Type: SAM; Serial: TP-1503
- Measurement SW: DASY52, Version 52.10 (2);SEMCAD X Version 14.6.12 (7470)

Area Scan (51x81x1): Interpolated grid: dx=1.200 mm, dy=1.200 mm
Maximum value of SAR (interpolated) = 1.15 W/kg

Zoom Scan (7x7x7)/Cube 0: Measurement grid: dx=5mm, dy=5mm, dz=5mm
Reference Value = 23.69 V/m; Power Drift = 0.14 dB
Peak SAR (extrapolated) = 1.85 W/kg
SAR(1 g) = 0.880 W/kg; SAR(10 g) = 0.423 W/kg
Maximum value of SAR (measured) = 1.16 W/kg

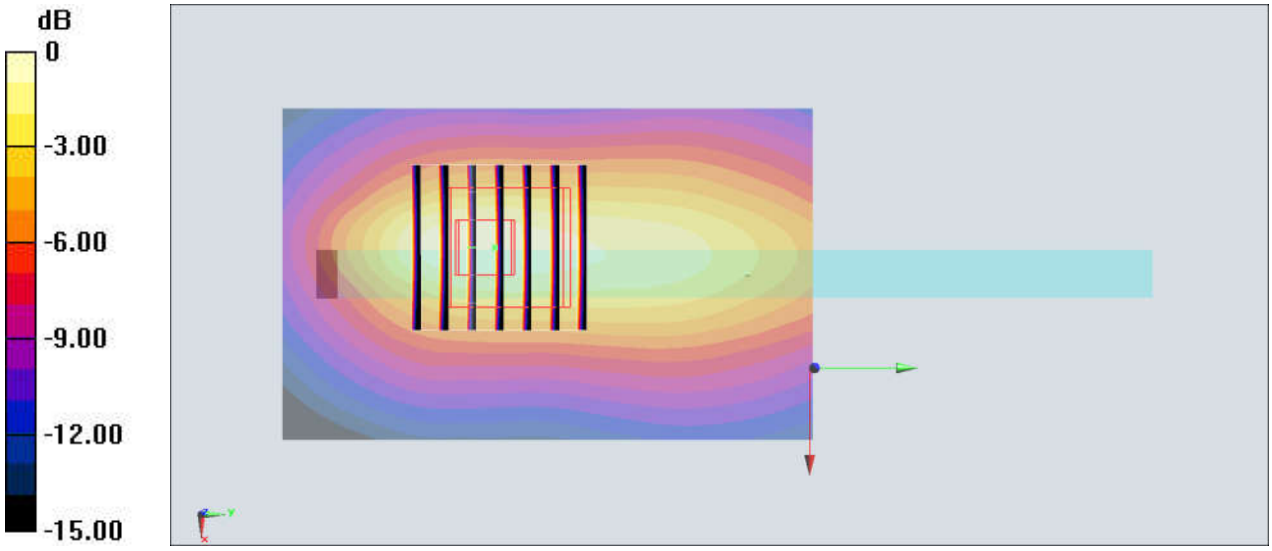

0 dB = 1.16 W/kg = 0.64 dBW/kg

#27_LTE Band 12_10M_QPSK_1_25_Left Side_10mm_Ch23095

Communication System: LTE; Frequency: 707.5 MHz;Duty Cycle: 1:1
Medium: HSL_750_190501 Medium parameters used : f = 707.5 MHz; σ = 0.855 S/m; ε_r = 41.233; ρ = 1000 kg/m^3
Ambient Temperature：23.5 ℃; Liquid Temperature：22.5 ℃

DASY5 Configuration:
- Probe: EX3DV4 - SN3931; ConvF(10.54, 10.54, 10.54) @ 707.5 MHz; Calibrated: 2018/9/27
- Sensor-Surface: 1.4mm (Mechanical Surface Detection)
- Electronics: DAE4 Sn1399; Calibrated: 2018/11/16
- Phantom: SAM_Left; Type: QD000P40CD; Serial: TP:1682
- Measurement SW: DASY52, Version 52.10 (2);SEMCAD X Version 14.6.12 (7450)

Area Scan (41x111x1): Interpolated grid: dx=1.500 mm, dy=1.500 mm
Maximum value of SAR (interpolated) = 0.506 W/kg

Zoom Scan (5x5x7)/Cube 0: Measurement grid: dx=8mm, dy=8mm, dz=5mm
Reference Value = 24.79 V/m; Power Drift = -0.04 dB
Peak SAR (extrapolated) = 0.536 W/kg
SAR(1 g) = 0.363 W/kg; SAR(10 g) = 0.248 W/kg
Maximum value of SAR (measured) = 0.476 W/kg

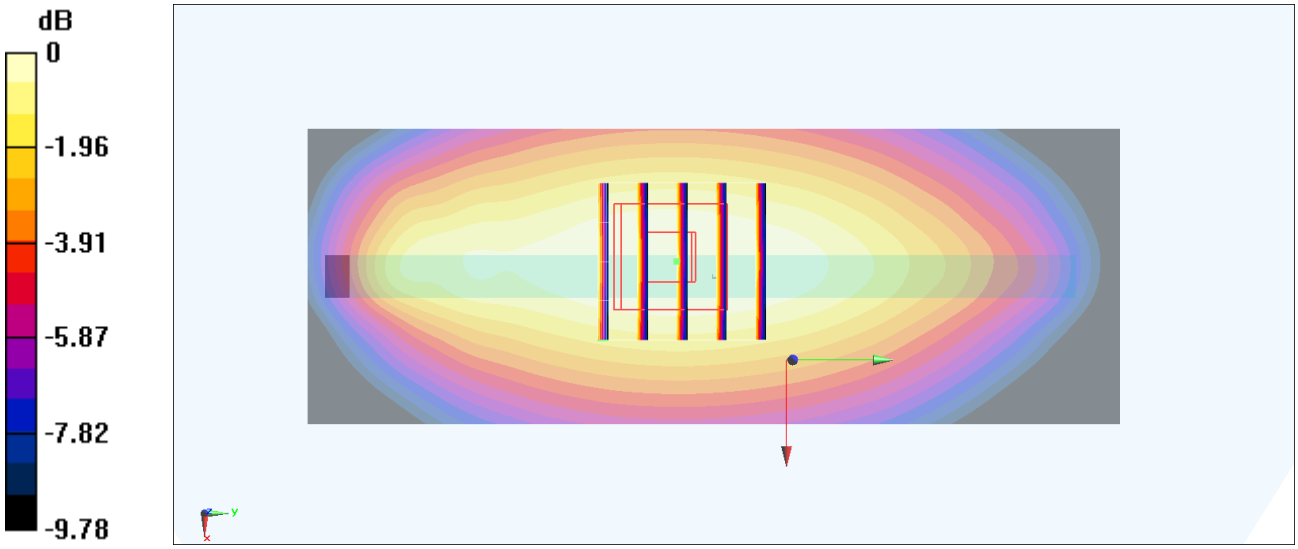

0 dB = 0.476 W/kg = -3.22 dBW/kg

#28_LTE Band 13_10M_QPSK_1_0_Left Side_10mm_Ch23230

Communication System: LTE; Frequency: 782 MHz;Duty Cycle: 1:1
Medium: HSL_750_190501 Medium parameters used: f = 782 MHz; σ = 0.924 S/m; ε_r = 40.275; ρ = 1000 kg/m^3
Ambient Temperature：23.5 ℃; Liquid Temperature：22.5 ℃

DASY5 Configuration:
- Probe: EX3DV4 - SN3931; ConvF(10.54, 10.54, 10.54) @ 782 MHz; Calibrated: 2018/9/27
- Sensor-Surface: 1.4mm (Mechanical Surface Detection)
- Electronics: DAE4 Sn1399; Calibrated: 2018/11/16
- Phantom: SAM_Left; Type: QD000P40CD; Serial: TP:1682
- Measurement SW: DASY52, Version 52.10 (2);SEMCAD X Version 14.6.12 (7450)

Area Scan (41x111x1): Interpolated grid: dx=1.500 mm, dy=1.500 mm
Maximum value of SAR (interpolated) = 0.798 W/kg

Zoom Scan (5x5x7)/Cube 0: Measurement grid: dx=8mm, dy=8mm, dz=5mm
Reference Value = 29.80 V/m; Power Drift = -0.00 dB
Peak SAR (extrapolated) = 0.851 W/kg
SAR(1 g) = 0.572 W/kg; SAR(10 g) = 0.387 W/kg
Maximum value of SAR (measured) = 0.756 W/kg

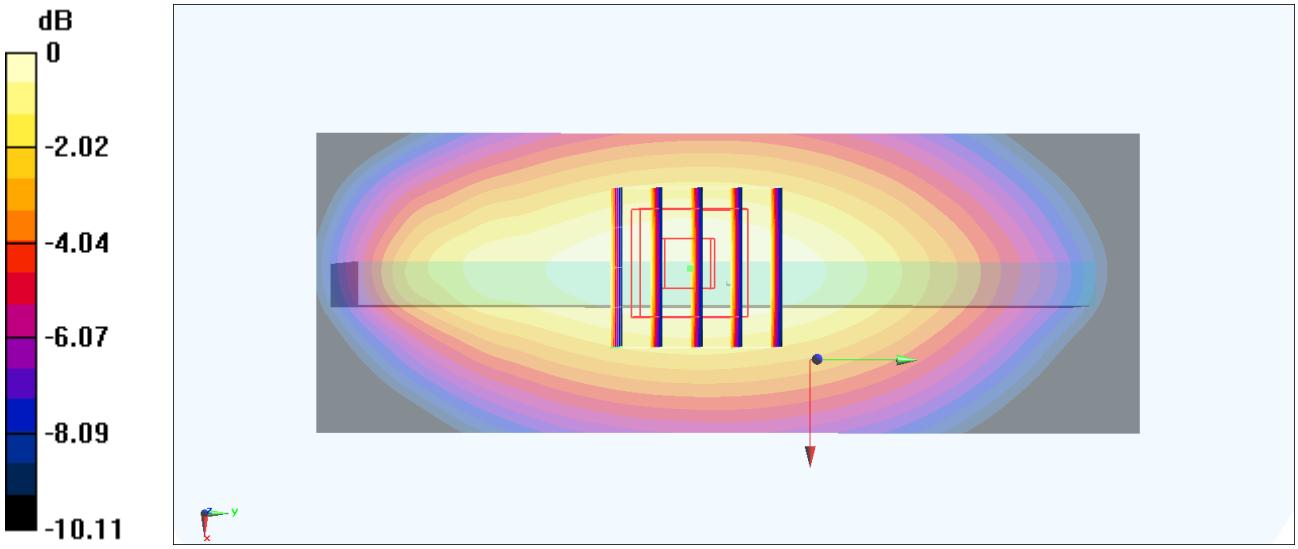

0 dB = 0.756 W/kg = -1.21 dBW/kg

Test Laboratory: Sporton International Inc. SAR/HAC Testing Lab Date: 2019/6/21

#29_LTE Band 25_20M_QPSK_1_0_Top Side_10mm_Ch26590

Communication System: LTE; Frequency: 1905 MHz;Duty Cycle: 1:1
Medium: HSL_1900_190621 Medium parameters used: f = 1905 MHz; σ = 1.454 S/m; ε_r = 38.939; ρ = 1000 kg/m^3
Ambient Temperature：23.1 ℃; Liquid Temperature：22.1 ℃

DASY5 Configuration:
- Probe: ES3DV3 - SN3270; ConvF(5.17, 5.17, 5.17) @ 1905 MHz; Calibrated: 2018/9/24
- Sensor-Surface: 3mm (Mechanical Surface Detection)
- Electronics: DAE3 Sn577; Calibrated: 2018/9/19
- Phantom: SAM-Middle; Type: SAM; Serial: 1796
- Measurement SW: DASY52, Version 52.10 (2);SEMCAD X Version 14.6.12 (7470)

Area Scan (41x71x1): Interpolated grid: dx=1.500 mm, dy=1.500 mm
Maximum value of SAR (interpolated) = 1.16 W/kg

Zoom Scan (5x5x7)/Cube 0: Measurement grid: dx=8mm, dy=8mm, dz=5mm
Reference Value = 26.91 V/m; Power Drift = 0.17 dB
Peak SAR (extrapolated) = 1.73 W/kg
SAR(1 g) = 0.911 W/kg; SAR(10 g) = 0.444 W/kg
Maximum value of SAR (measured) = 1.18 W/kg

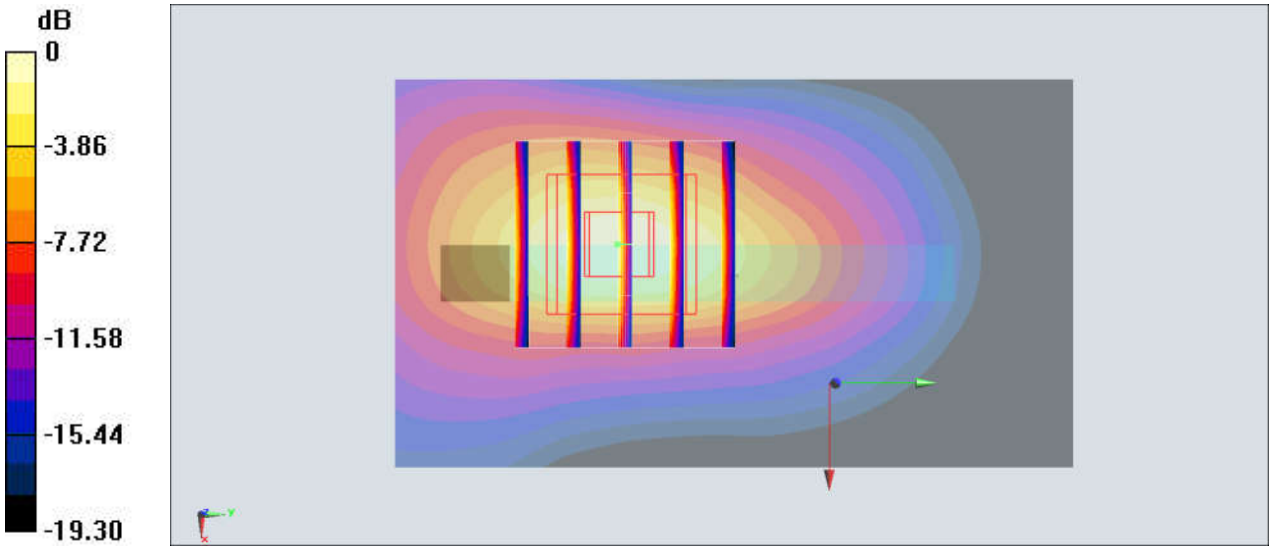

0 dB = 1.18 W/kg = 0.72 dBW/kg

#30_LTE Band 26_15M_QPSK_1_74_Left Side_10mm_Ch26865

Communication System: LTE; Frequency: 831.5 MHz;Duty Cycle: 1:1
Medium: HSL_850_190430 Medium parameters used: f = 831.5 MHz; σ = 0.874 S/m; ε_r = 41.117; ρ = 1000 kg/m^3
Ambient Temperature：23.2 ℃; Liquid Temperature：22.2 ℃

DASY5 Configuration:
- Probe: EX3DV4 - SN3931; ConvF(10.07, 10.07, 10.07) @ 831.5 MHz; Calibrated: 2018/9/27
- Sensor-Surface: 1.4mm (Mechanical Surface Detection)
- Electronics: DAE4 Sn1399; Calibrated: 2018/11/16
- Phantom: SAM_Left; Type: QD000P40CD; Serial: TP:1682
- Measurement SW: DASY52, Version 52.10 (2);SEMCAD X Version 14.6.12 (7450)

Area Scan (41x111x1): Interpolated grid: dx=1.500 mm, dy=1.500 mm
Maximum value of SAR (interpolated) = 0.891 W/kg

Zoom Scan (5x5x7)/Cube 0: Measurement grid: dx=8mm, dy=8mm, dz=5mm
Reference Value = 31.81 V/m; Power Drift = 0.02 dB
Peak SAR (extrapolated) = 0.966 W/kg
SAR(1 g) = 0.633 W/kg; SAR(10 g) = 0.422 W/kg
Maximum value of SAR (measured) = 0.848 W/kg

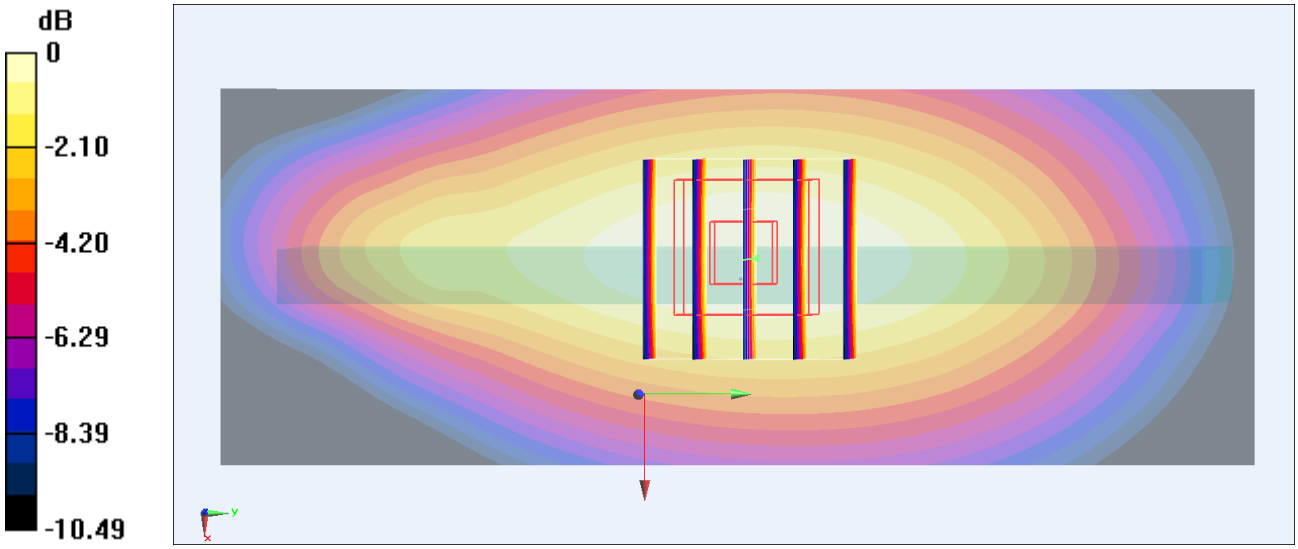

0 dB = 0.848 W/kg = -0.72 dBW/kg

Test Laboratory: Sporton International Inc. SAR/HAC Testing Lab Date: 2019/5/5

#31_LTE Band 66_20M_QPSK_1_0_Bottom Side_10mm_Ch132572

Communication System: LTE; Frequency: 1770 MHz;Duty Cycle: 1:1
Medium: HSL_1750_190505 Medium parameters used: f = 1770 MHz; σ = 1.369 S/m; ε_r = 39.644; ρ = 1000 kg/m^3
Ambient Temperature：23.1 ℃; Liquid Temperature：22.1 ℃

DASY5 Configuration:
- Probe: ES3DV3 - SN3169; ConvF(5.48, 5.48, 5.48) @ 1770 MHz; Calibrated: 2018/5/28
- Sensor-Surface: 3mm (Mechanical Surface Detection)
- Electronics: DAE3 Sn577; Calibrated: 2018/9/19
- Phantom: SAM_Left; Type: QD000P40CD; Serial: TP:1431
- Measurement SW: DASY52, Version 52.10 (2);SEMCAD X Version 14.6.12 (7450)

Area Scan (41x71x1): Interpolated grid: dx=1.500 mm, dy=1.500 mm
Maximum value of SAR (interpolated) = 1.09 W/kg

Zoom Scan (5x5x7)/Cube 0: Measurement grid: dx=8mm, dy=8mm, dz=5mm
Reference Value = 26.08 V/m; Power Drift = 0.07 dB
Peak SAR (extrapolated) = 1.42 W/kg
SAR(1 g) = 0.872 W/kg; SAR(10 g) = 0.507 W/kg
Maximum value of SAR (measured) = 1.06 W/kg

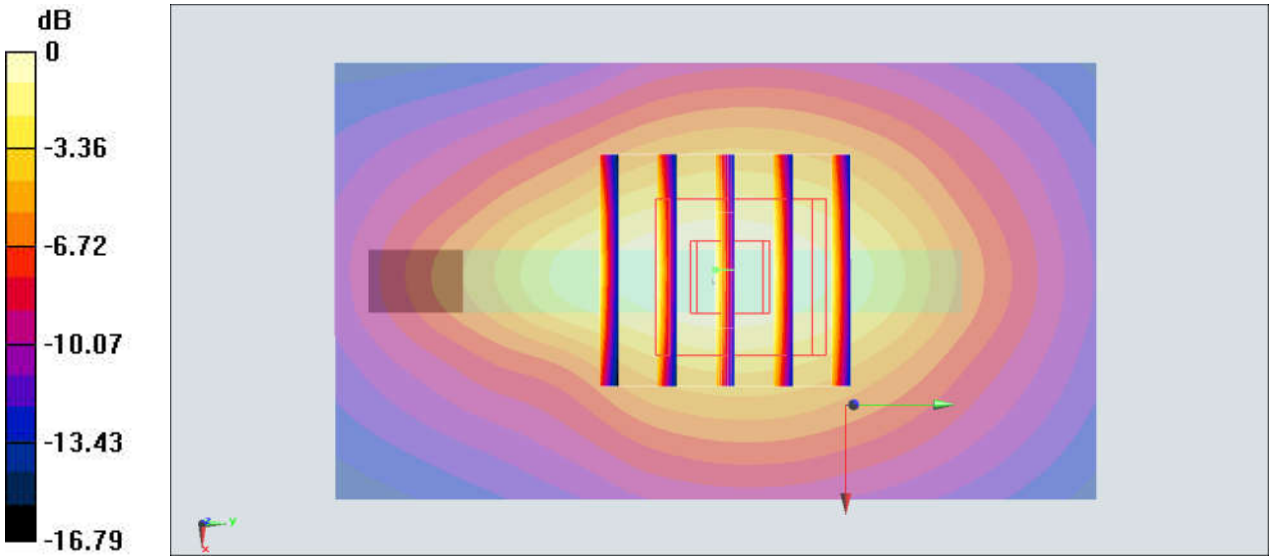

0 dB = 1.06 W/kg = 0.25 dBW/kg

#32_LTE Band 71_20M_QPSK_1_0_Left Side_10mm_Ch133297

Communication System: LTE; Frequency: 680.5 MHz;Duty Cycle: 1:1
Medium: HSL_750_190501 Medium parameters used : f = 680.5 MHz; σ = 0.857 S/m; ε_r = 41.734; ρ = 1000 kg/m^3
Ambient Temperature：23.5 ℃; Liquid Temperature：22.5 ℃

DASY5 Configuration:
- Probe: EX3DV4 - SN3931; ConvF(10.54, 10.54, 10.54) @ 680.5 MHz; Calibrated: 2018/9/27
- Sensor-Surface: 1.4mm (Mechanical Surface Detection)
- Electronics: DAE4 Sn1399; Calibrated: 2018/11/16
- Phantom: SAM_Left; Type: QD000P40CD; Serial: TP:1682
- Measurement SW: DASY52, Version 52.10 (2);SEMCAD X Version 14.6.12 (7450)

Area Scan (41x111x1): Interpolated grid: dx=1.500 mm, dy=1.500 mm
Maximum value of SAR (interpolated) = 0.433 W/kg

Zoom Scan (5x5x7)/Cube 0: Measurement grid: dx=8mm, dy=8mm, dz=5mm
Reference Value = 22.27 V/m; Power Drift = -0.03 dB
Peak SAR (extrapolated) = 0.455 W/kg
SAR(1 g) = 0.308 W/kg; SAR(10 g) = 0.212 W/kg
Maximum value of SAR (measured) = 0.404 W/kg

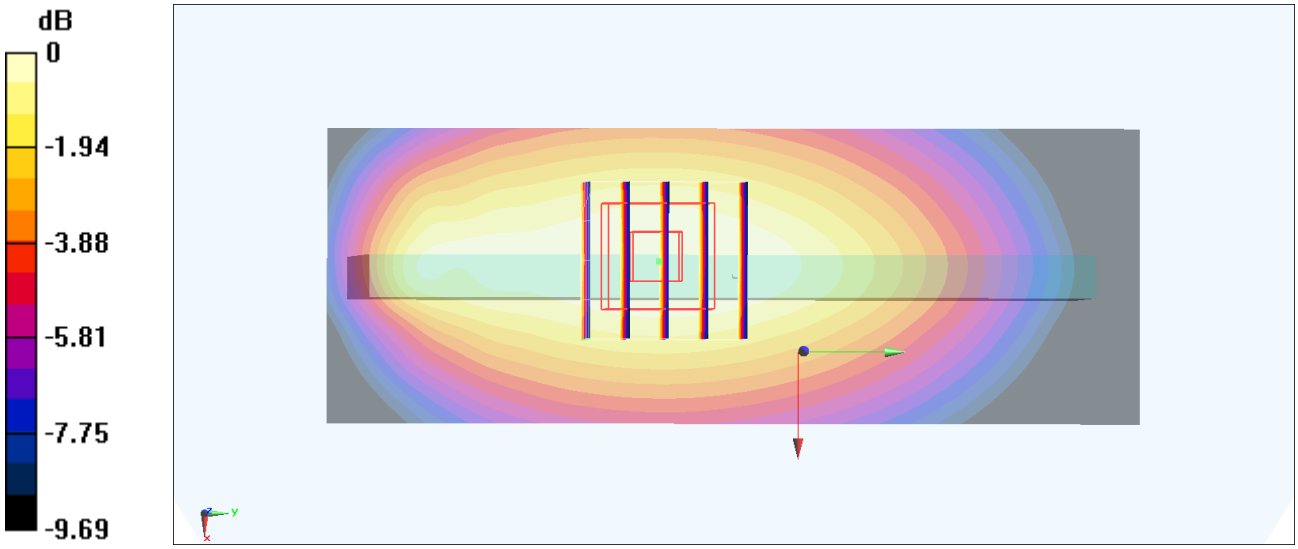

0 dB = 0.404 W/kg = -3.94 dBW/kg

Test Laboratory: Sporton International Inc. SAR/HAC Testing Lab Date: 2019/6/20

#33_LTE Band 41_20M_QPSK_1_0_Back_10mm_Ch39750

Communication System: LTE; Frequency: 2506 MHz;Duty Cycle: 1:1.59
Medium: HSL_2600_190620 Medium parameters used: f = 2506 MHz; σ = 1.86 S/m; ε_r = 38.508; ρ = 1000 kg/m^3
Ambient Temperature：23.3 ℃; Liquid Temperature：22.3 ℃

DASY5 Configuration:
- Probe: ES3DV3 - SN3270; ConvF(4.43, 4.43, 4.43) @ 2506 MHz; Calibrated: 2018/9/24
- Sensor-Surface: 3mm (Mechanical Surface Detection)
- Electronics: DAE3 Sn577; Calibrated: 2018/9/19
- Phantom: SAM-Right; Type: SAM; Serial: TP-1503
- Measurement SW: DASY52, Version 52.10 (2);SEMCAD X Version 14.6.12 (7470)

Area Scan (91x81x1): Interpolated grid: dx=1.200 mm, dy=1.200 mm
Maximum value of SAR (interpolated) = 1.05 W/kg

Zoom Scan (7x7x7)/Cube 0: Measurement grid: dx=5mm, dy=5mm, dz=5mm
Reference Value = 16.50 V/m; Power Drift = -0.15 dB
Peak SAR (extrapolated) = 1.73 W/kg
SAR(1 g) = 0.812 W/kg; SAR(10 g) = 0.358 W/kg
Maximum value of SAR (measured) = 1.08 W/kg

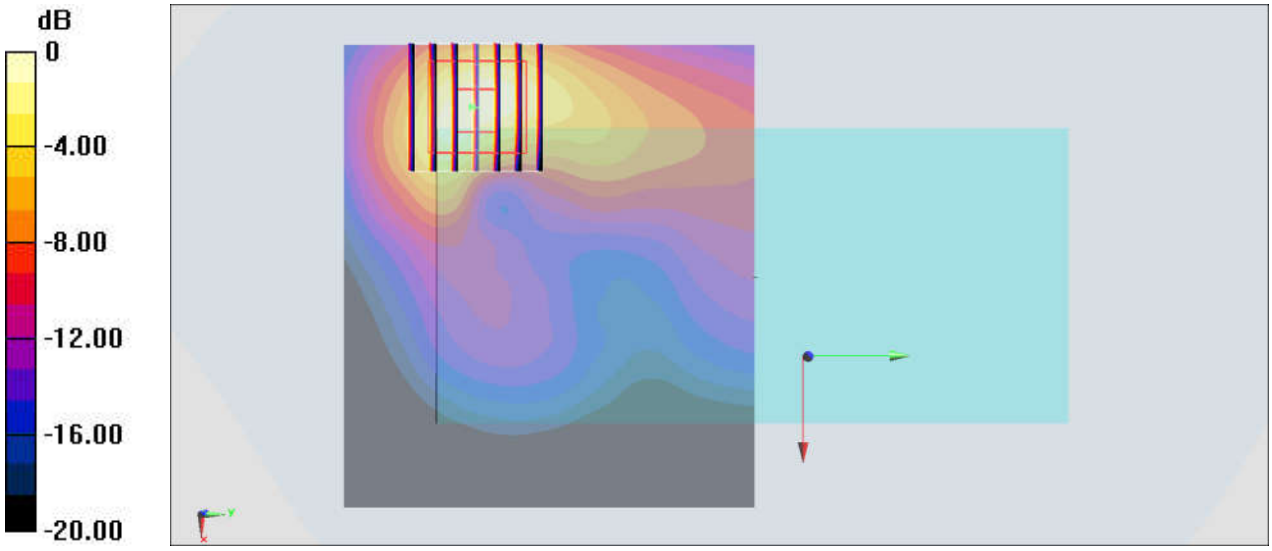

0 dB = 1.08 W/kg = 0.33 dBW/kg

#34_WLAN2.4GHz_802.11b 1Mbps_Right Side_10mm_Ch11;Ant 2+3

Communication System: 802.11b ; Frequency: 2462 MHz;Duty Cycle: 1:1.008
Medium: HSL_2450_190701 Medium parameters used : f = 2462 MHz; σ = 1.799 S/m; ε_r = 39.863; ρ = 1000 kg/m^3
Ambient Temperature：23.8 ℃; Liquid Temperature：22.8 ℃

DASY5 Configuration
- Probe: EX3DV4 - SN7515;ConvF(7.42, 7.42, 7.42) @ 2462 MHz;Calibrated: 2018/10/3
- Sensor-Surface: 1.4mm (Mechanical Surface Detection)
- Electronics: DAE3 Sn360; Calibrated: 2018/10/29
- Phantom: Twin-SAM V5.0 (30deg probe tilt); Type: QD 000 P40 CD; Serial: 1885
- Measurement SW: DASY52, Version 52.10 (2); SEMCAD X Version 14.6.12 (7450)

Area Scan (61x91x1): Interpolated grid: dx=1.200 mm, dy=1.200 mm
Maximum value of SAR (interpolated) = 1.05 W/kg

Zoom Scan (7x7x7)/Cube 0: Measurement grid: dx=5mm, dy=5mm, dz=5mm
Reference Value = 20.15 V/m; Power Drift = -0.01 dB
Peak SAR (extrapolated) = 1.27 W/kg
SAR(1 g) = 0.579 W/kg; SAR(10 g) = 0.265 W/kg
Maximum value of SAR (measured) = 1.03 W/kg

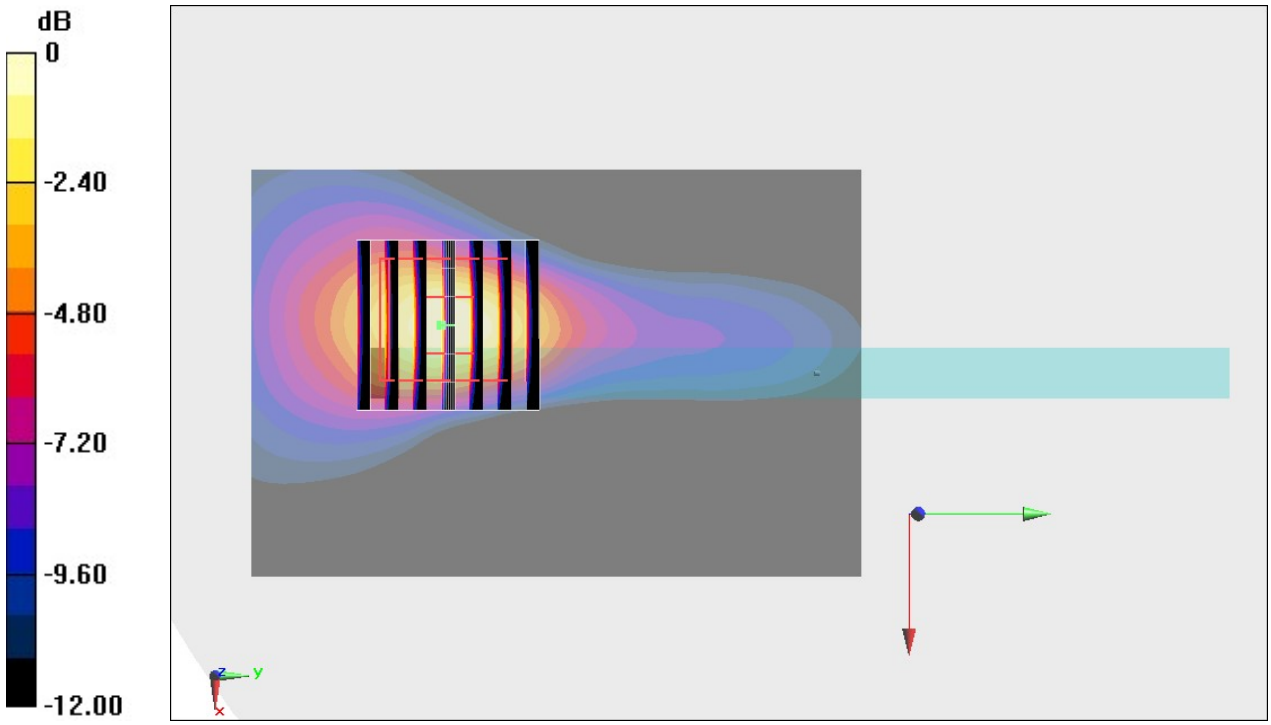

0 dB = 1.03 W/kg = 0.13 dBW/kg

#35_WLAN5GHz_802.11n-HT40 MCS0_Left Side_10mm_Ch46;Ant 2+5

Communication System: 802.11n ; Frequency: 5230 MHz;Duty Cycle: 1:1.048
Medium: HSL_5G_190628 Medium parameters used: f = 5230 MHz; σ = 4.568 S/m; ε_r = 36.799; ρ = 1000 kg/m^3
Ambient Temperature：23.5 ℃; Liquid Temperature：22.5 ℃

DASY5 Configuration
- Probe: EX3DV4 - SN7515;ConvF(5.45, 5.45, 5.45) @ 5230 MHz;Calibrated: 2018/10/3
- Sensor-Surface: 1.4mm (Mechanical Surface Detection)
- Electronics: DAE3 Sn360; Calibrated: 2018/10/29
- Phantom: Twin-SAM V5.0 (30deg probe tilt); Type: QD 000 P40 CD; Serial: 1885
- Measurement SW: DASY52, Version 52.10 (2); SEMCAD X Version 14.6.12 (7450)

Area Scan (81x101x1): Interpolated grid: dx=1.000 mm, dy=1.000 mm
Maximum value of SAR (interpolated) = 0.419 W/kg

Zoom Scan (7x7x7)/Cube 0: Measurement grid: dx=4mm, dy=4mm, dz=1.4mm
Reference Value = 6.968 V/m; Power Drift = -0.14 dB
Peak SAR (extrapolated) = 0.641 W/kg
SAR(1 g) = 0.276 W/kg; SAR(10 g) = 0.098 W/kg
Maximum value of SAR (measured) = 0.402 W/kg

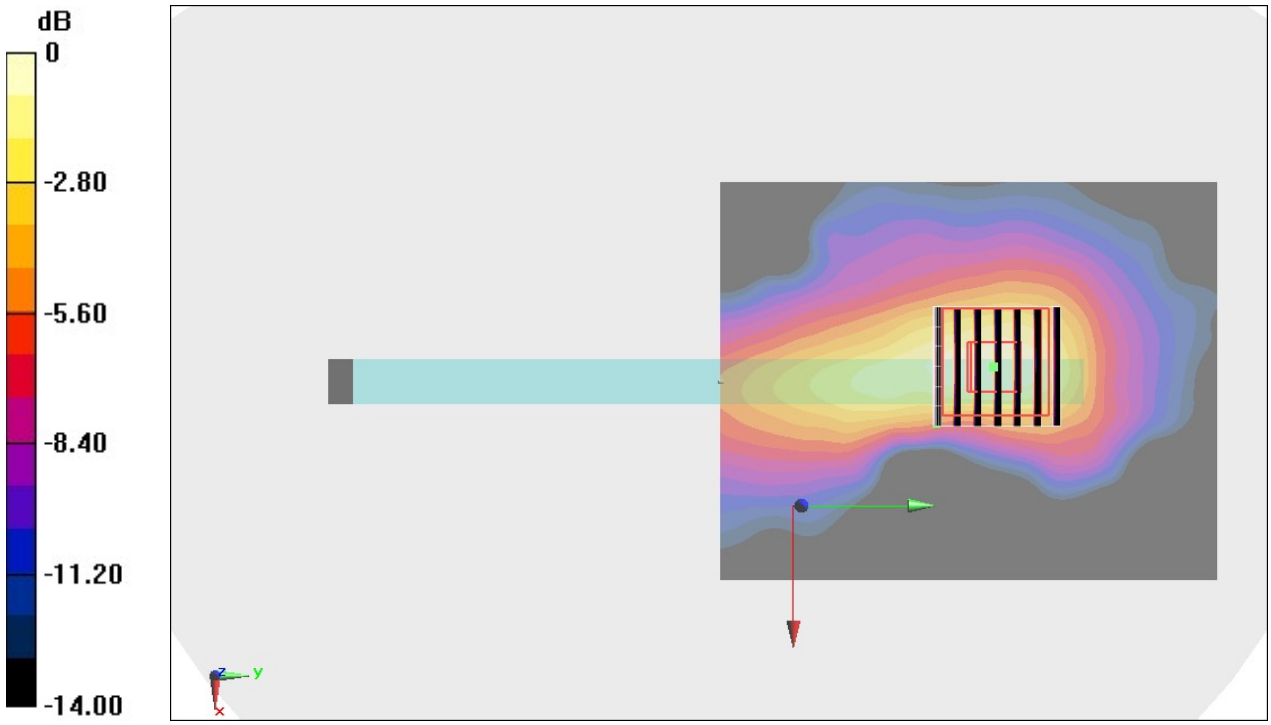

0 dB = 0.402 W/kg = -3.96 dBW/kg

#36_WLAN5GHz_802.11ac-VHT80 MCS0_Left Side_10mm_Ch155;Ant 2

Communication System: 802.11ac ; Frequency: 5775 MHz;Duty Cycle: 1:1.091
Medium: HSL_5G_190628 Medium parameters used: f = 5775 MHz; σ = 5.118 S/m; ε_r = 36.045; ρ = 1000 kg/m^3
Ambient Temperature：23.5 ℃; Liquid Temperature：22.5 ℃

DASY5 Configuration
- Probe: EX3DV4 - SN7515;ConvF(4.95, 4.95, 4.95) @ 5775 MHz;Calibrated: 2018/10/3
- Sensor-Surface: 1.4mm (Mechanical Surface Detection)
- Electronics: DAE3 Sn360; Calibrated: 2018/10/29
- Phantom: Twin-SAM V5.0 (30deg probe tilt); Type: QD 000 P40 CD; Serial: 1885
- Measurement SW: DASY52, Version 52.10 (2); SEMCAD X Version 14.6.12 (7450)

Area Scan (81x101x1): Interpolated grid: dx=1.000 mm, dy=1.000 mm
Maximum value of SAR (interpolated) = 0.651 W/kg

Zoom Scan (7x7x7)/Cube 0: Measurement grid: dx=4mm, dy=4mm, dz=1.4mm
Reference Value = 8.111 V/m; Power Drift = -0.13 dB
Peak SAR (extrapolated) = 1.13 W/kg
SAR(1 g) = 0.272 W/kg; SAR(10 g) = 0.095 W/kg
Maximum value of SAR (measured) = 0.667 W/kg

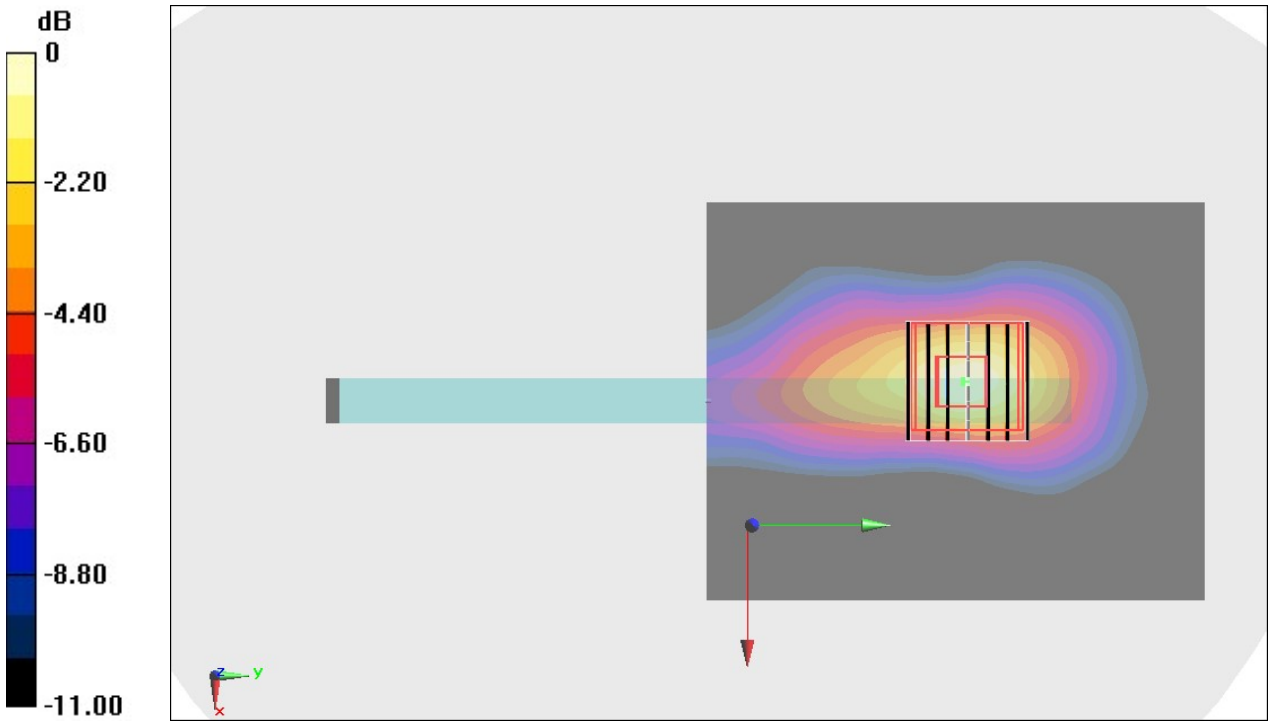

0 dB = 0.667 W/kg = -1.76 dBW/kg

#37_Bluethooth_1Mbps_Left Side_10mm_Ch0;Ant 2

Communication System: Bluetooth ; Frequency: 2402 MHz;Duty Cycle: 1:1.301
Medium: HSL_2450_190701 Medium parameters used : f = 2402 MHz; σ = 1.738 S/m; ε_r = 40.088; ρ = 1000 kg/m^3
Ambient Temperature：23.8 ℃; Liquid Temperature：22.8 ℃

DASY5 Configuration
- Probe: EX3DV4 - SN7515;ConvF(7.42, 7.42, 7.42) @ 2402 MHz;Calibrated: 2018/10/3
- Sensor-Surface: 1.4mm (Mechanical Surface Detection)
- Electronics: DAE3 Sn360; Calibrated: 2018/10/29
- Phantom: Twin-SAM V5.0 (30deg probe tilt); Type: QD 000 P40 CD; Serial: 1885
- Measurement SW: DASY52, Version 52.10 (2); SEMCAD X Version 14.6.12 (7450)

Area Scan (61x71x1): Interpolated grid: dx=1.200 mm, dy=1.200 mm
Maximum value of SAR (interpolated) = 0.147 W/kg

Zoom Scan (7x7x7)/Cube 0: Measurement grid: dx=5mm, dy=5mm, dz=5mm
Reference Value = 6.320 V/m; Power Drift = -0.17 dB
Peak SAR (extrapolated) = 0.187 W/kg
SAR(1 g) = 0.088 W/kg; SAR(10 g) = 0.042 W/kg
Maximum value of SAR (measured) = 0.147 W/kg

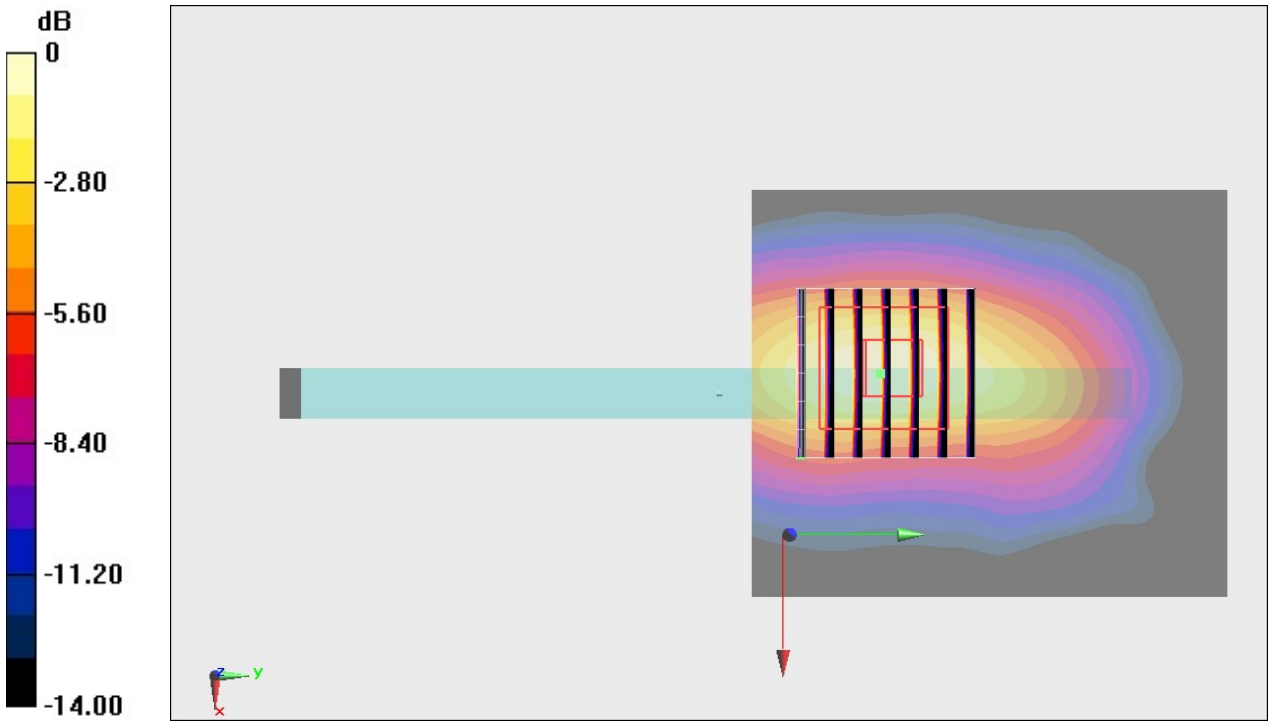

0 dB = 0.147 W/kg = -8.33 dBW/kg