System Check_Head_750MHz

DUT: D750V3-1107

Communication System: CW ; Frequency: 750 MHz;Duty Cycle: 1:1
Medium: HSL_750_200531 Medium parameters used: f = 750 MHz; σ = 0.917 S/m; ε_r = 43.803; ρ = 1000 kg/m^3
Ambient Temperature：23.8 ℃; Liquid Temperature：22.8 ℃

DASY5 Configuration:
- Probe: ES3DV3 - SN3184; ConvF(6.61, 6.61, 6.61) @ 750 MHz; Calibrated: 2019/9/25
- Sensor-Surface: 3mm (Mechanical Surface Detection)
- Electronics: DAE4 Sn916; Calibrated: 2019/12/17
- Phantom: SAM_Right; Type: QD000P40CD; Serial: TP:1683
- Measurement SW: DASY52, Version 52.10 (4);SEMCAD X Version 14.6.14 (7483)

Pin=250mW/Area Scan (61x61x1): Interpolated grid: dx=1.500 mm, dy=1.500 mm
Maximum value of SAR (interpolated) = 2.38 W/kg

Pin=250mW/Zoom Scan (5x5x7)/Cube 0: Measurement grid: dx=8mm, dy=8mm, dz=5mm
Reference Value = 52.28 V/m; Power Drift = -0.12 dB
Peak SAR (extrapolated) = 2.81 W/kg
SAR(1 g) = 2.05 W/kg; SAR(10 g) = 1.41 W/kg
Maximum value of SAR (measured) = 2.35 W/kg

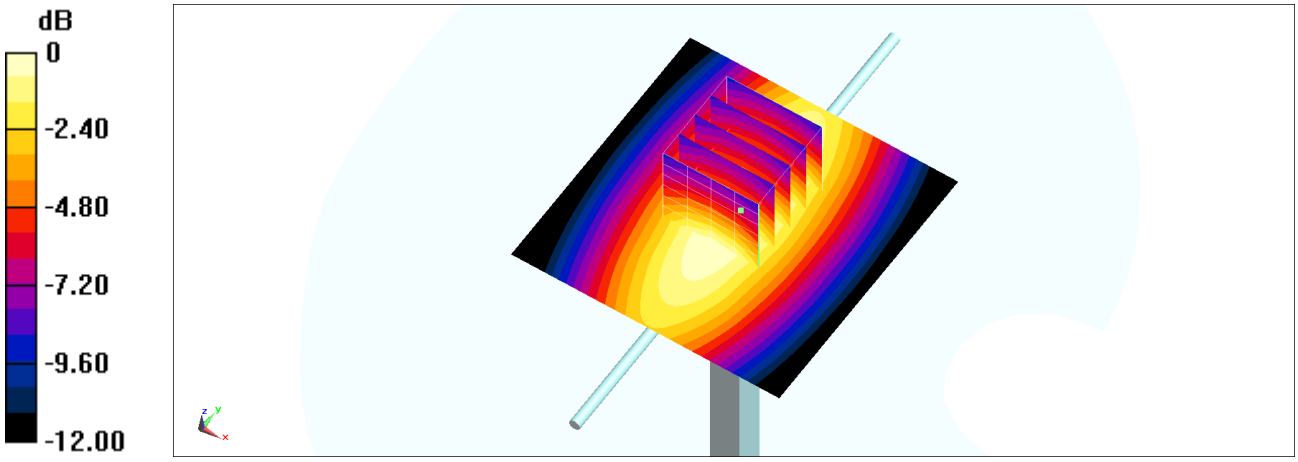

0 dB = 2.35 W/kg = 3.71 dBW/kg

System Check_Head_750MHz

DUT: D750V3-1107

Communication System: CW ; Frequency: 750 MHz;Duty Cycle: 1:1
Medium: HSL_750_200603 Medium parameters used: f = 750 MHz; σ = 0.917 S/m; ε_r = 41.887; ρ = 1000 kg/m^3
Ambient Temperature：23.2 ℃; Liquid Temperature：22.2 ℃

DASY5 Configuration:
- Probe: ES3DV3 - SN3184; ConvF(6.61, 6.61, 6.61) @ 750 MHz; Calibrated: 2019/9/25
- Sensor-Surface: 3mm (Mechanical Surface Detection)
- Electronics: DAE4 Sn916; Calibrated: 2019/12/17
- Phantom: SAM_Right; Type: QD000P40CD; Serial: TP:1683
- Measurement SW: DASY52, Version 52.10 (4);SEMCAD X Version 14.6.14 (7483)

Pin=250mW/Area Scan (61x61x1): Interpolated grid: dx=1.500 mm, dy=1.500 mm
Maximum value of SAR (interpolated) = 2.38 W/kg

Pin=250mW/Zoom Scan (5x5x7)/Cube 0: Measurement grid: dx=8mm, dy=8mm, dz=5mm
Reference Value = 52.28 V/m; Power Drift = -0.02 dB
Peak SAR (extrapolated) = 2.81 W/kg
SAR(1 g) = 2.05 W/kg; SAR(10 g) = 1.41 W/kg
Maximum value of SAR (measured) = 2.35 W/kg

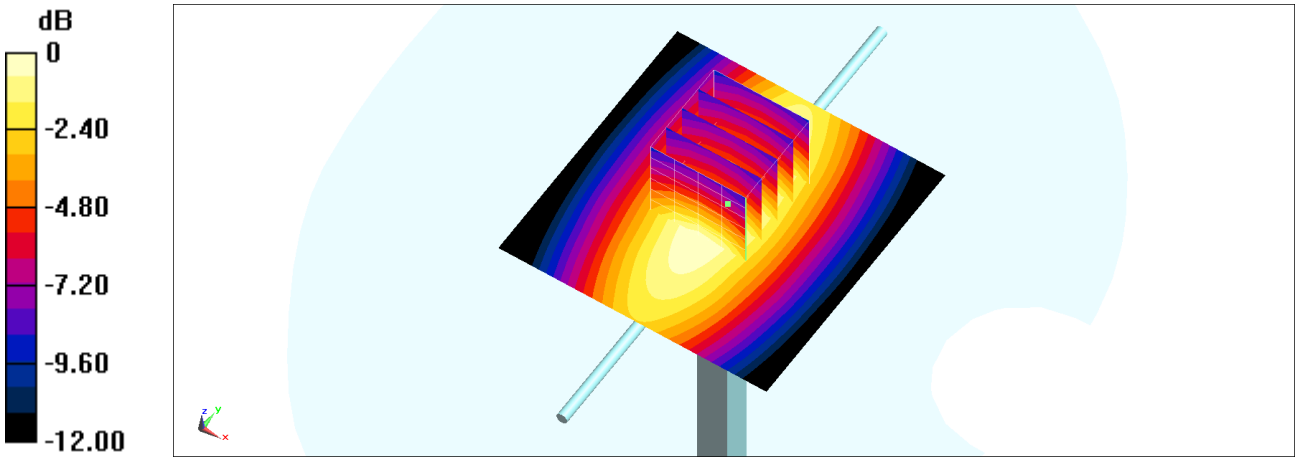

0 dB = 2.35 W/kg = 3.71 dBW/kg

System Check_Head_750MHz

DUT: D750V3-1107

Communication System: CW ; Frequency: 750 MHz;Duty Cycle: 1:1
Medium: HSL_750_200604 Medium parameters used: f = 750 MHz; σ = 0.921 S/m; ε_r = 41.987; ρ = 1000 kg/m^3
Ambient Temperature：23.6 ℃; Liquid Temperature：22.6 ℃

DASY5 Configuration:
- Probe: ES3DV3 - SN3184; ConvF(6.61, 6.61, 6.61) @ 750 MHz; Calibrated: 2019/9/25
- Sensor-Surface: 3mm (Mechanical Surface Detection)
- Electronics: DAE4 Sn916; Calibrated: 2019/12/17
- Phantom: SAM_Right; Type: QD000P40CD; Serial: TP:1683
- Measurement SW: DASY52, Version 52.10 (4);SEMCAD X Version 14.6.14 (7483)

Pin=250mW/Area Scan (61x61x1): Interpolated grid: dx=1.500 mm, dy=1.500 mm
Maximum value of SAR (interpolated) = 2.39 W/kg

Pin=250mW/Zoom Scan (5x5x7)/Cube 0: Measurement grid: dx=8mm, dy=8mm, dz=5mm
Reference Value = 52.28 V/m; Power Drift = -0.02 dB
Peak SAR (extrapolated) = 2.82 W/kg
SAR(1 g) = 2.06 W/kg; SAR(10 g) = 1.41 W/kg
Maximum value of SAR (measured) = 2.36 W/kg

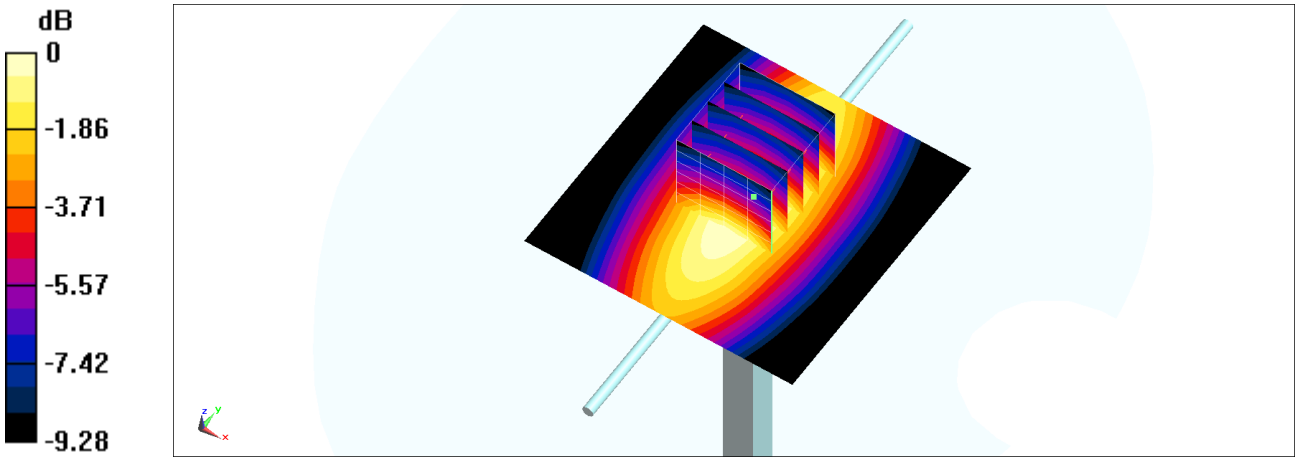

0 dB = 2.36 W/kg = 3.73 dBW/kg

System Check_Head_750MHz

DUT: D750V3-1107

Communication System: CW ; Frequency: 750 MHz;Duty Cycle: 1:1
Medium: HSL_750_200623 Medium parameters used: f = 750 MHz; σ = 0.901 S/m; ε_r = 43.165; ρ = 1000 kg/m^3
Ambient Temperature：23.6 ℃; Liquid Temperature：22.6 ℃

DASY5 Configuration:
- Probe: EX3DV4 - SN3925; ConvF(10.33, 10.33, 10.33) @ 750 MHz; Calibrated: 2019/9/20
- Sensor-Surface: 1.4mm (Mechanical Surface Detection)
- Electronics: DAE4 Sn376; Calibrated: 2019/12/6
- Phantom: SAM_Left; Type: QD000P40CD; Serial: TP:1682
- Measurement SW: DASY52, Version 52.10 (4);SEMCAD X Version 14.6.14 (7483)

Pin=250mW/Area Scan (61x61x1): Interpolated grid: dx=1.500 mm, dy=1.500 mm
Maximum value of SAR (interpolated) = 2.79 W/kg

Pin=250mW/Zoom Scan (5x5x7)/Cube 0: Measurement grid: dx=8mm, dy=8mm, dz=5mm
Reference Value = 58.37 V/m; Power Drift = -0.13 dB
Peak SAR (extrapolated) = 3.20 W/kg
SAR(1 g) = 2.12 W/kg; SAR(10 g) = 1.42 W/kg
Maximum value of SAR (measured) = 2.83 W/kg

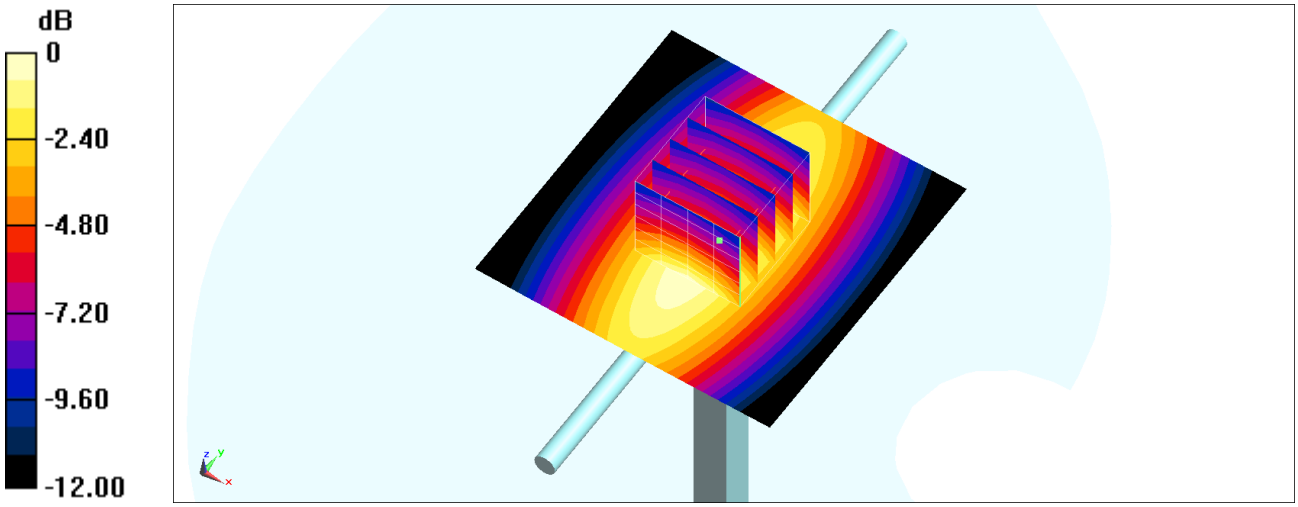

0 dB = 2.83 W/kg = 4.52 dBW/kg

System Check_Head_835MHz

DUT: D835V2-4d167

Communication System: CW; Frequency: 835 MHz;Duty Cycle: 1:1
Medium: HSL_835_200601 Medium parameters used: f = 835 MHz; σ = 0.889 S/m; ε_r = 40.674; ρ = 1000 kg/m^3
Ambient Temperature：23.3 ℃; Liquid Temperature：22.3 ℃

DASY5 Configuration:
- Probe: ES3DV3 - SN3184; ConvF(6.41, 6.41, 6.41) @ 835 MHz; Calibrated: 2019/9/25
- Sensor-Surface: 3mm (Mechanical Surface Detection)
- Electronics: DAE4 Sn916; Calibrated: 2019/12/17
- Phantom: SAM_Right; Type: QD000P40CD; Serial: TP:1683
- Measurement SW: DASY52, Version 52.10 (4);SEMCAD X Version 14.6.14 (7483)

Pin=250mW/Area Scan (61x61x1): Interpolated grid: dx=1.500 mm, dy=1.500 mm
Maximum value of SAR (interpolated) = 2.63 W/kg

Pin=250mW/Zoom Scan (5x5x7)/Cube 0: Measurement grid: dx=8mm, dy=8mm, dz=5mm
Reference Value = 56.07 V/m; Power Drift = 0.02 dB
Peak SAR (extrapolated) = 3.33 W/kg
SAR(1 g) = 2.26 W/kg; SAR(10 g) = 1.49 W/kg
Maximum value of SAR (measured) = 2.64 W/kg

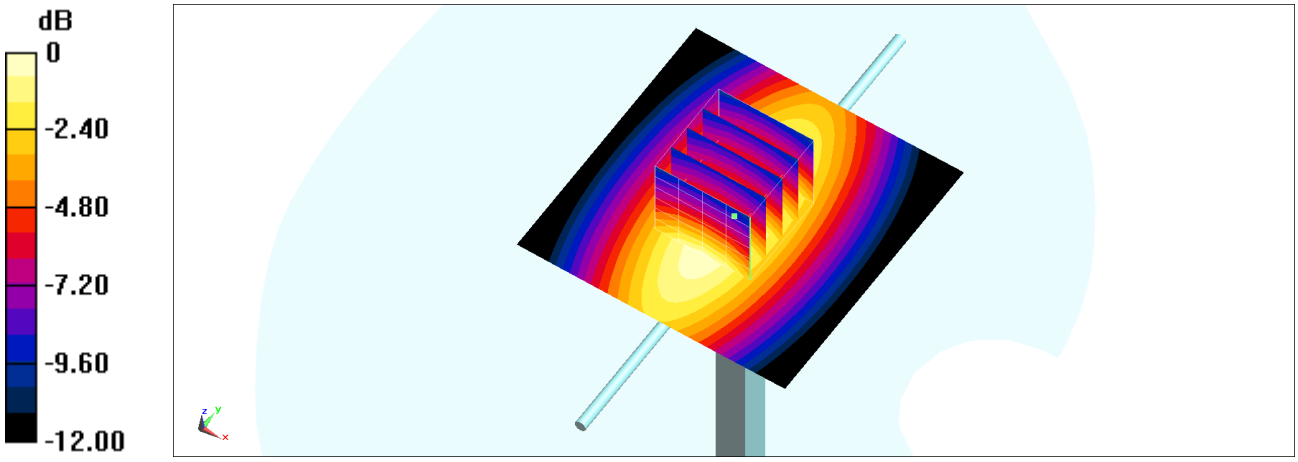

0 dB = 2.64 W/kg = 4.22 dBW/kg

System Check_Head_835MHz

DUT: D835V2-4d167

Communication System: CW; Frequency: 835 MHz;Duty Cycle: 1:1
Medium: HSL_850_200605 Medium parameters used: f = 835 MHz; σ = 0.911 S/m; ε_r = 42.388; ρ = 1000 kg/m^3
Ambient Temperature：23.7 ℃; Liquid Temperature：22.7 ℃

DASY5 Configuration:
- Probe: ES3DV3 - SN3184; ConvF(6.41, 6.41, 6.41) @ 835 MHz; Calibrated: 2019/9/25
- Sensor-Surface: 3mm (Mechanical Surface Detection)
- Electronics: DAE4 Sn916; Calibrated: 2019/12/17
- Phantom: SAM_Right; Type: QD000P40CD; Serial: TP:1683
- Measurement SW: DASY52, Version 52.10 (4);SEMCAD X Version 14.6.14 (7483)

Pin=250mW/Area Scan (61x61x1): Interpolated grid: dx=1.500 mm, dy=1.500 mm
Maximum value of SAR (interpolated) = 2.61 W/kg

Pin=250mW/Zoom Scan (5x5x7)/Cube 0: Measurement grid: dx=8mm, dy=8mm, dz=5mm
Reference Value = 54.58 V/m; Power Drift = -0.06 dB
Peak SAR (extrapolated) = 3.14 W/kg
SAR(1 g) = 2.24 W/kg; SAR(10 g) = 1.5 W/kg
Maximum value of SAR (measured) = 2.58 W/kg

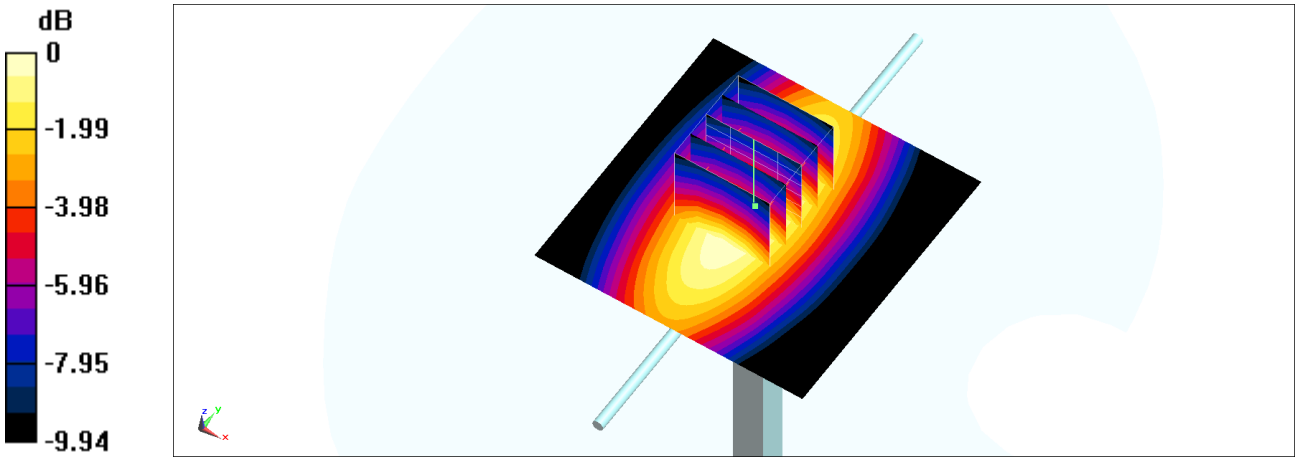

0 dB = 2.58 W/kg = 4.12 dBW/kg

System Check_Head_835MHz

DUT: D835V2-4d167

Communication System: CW; Frequency: 835 MHz;Duty Cycle: 1:1
Medium: HSL_850_200609 Medium parameters used: f = 835 MHz; σ = 0.933 S/m; ε_r = 42.491; ρ = 1000 kg/m^3
Ambient Temperature：23.6 ℃; Liquid Temperature：22.6 ℃

DASY5 Configuration:
- Probe: ES3DV3 - SN3184; ConvF(6.41, 6.41, 6.41) @ 835 MHz; Calibrated: 2019/9/25
- Sensor-Surface: 3mm (Mechanical Surface Detection)
- Electronics: DAE4 Sn916; Calibrated: 2019/12/17
- Phantom: SAM_Right; Type: QD000P40CD; Serial: TP:1683
- Measurement SW: DASY52, Version 52.10 (4);SEMCAD X Version 14.6.14 (7483)

Pin=250mW/Area Scan (61x61x1): Interpolated grid: dx=1.500 mm, dy=1.500 mm
Maximum value of SAR (interpolated) = 2.68 W/kg

Pin=250mW/Zoom Scan (5x5x7)/Cube 0: Measurement grid: dx=8mm, dy=8mm, dz=5mm
Reference Value = 54.58 V/m; Power Drift = -0.16 dB
Peak SAR (extrapolated) = 3.21 W/kg
SAR(1 g) = 2.29 W/kg; SAR(10 g) = 1.54 W/kg
Maximum value of SAR (measured) = 2.64 W/kg

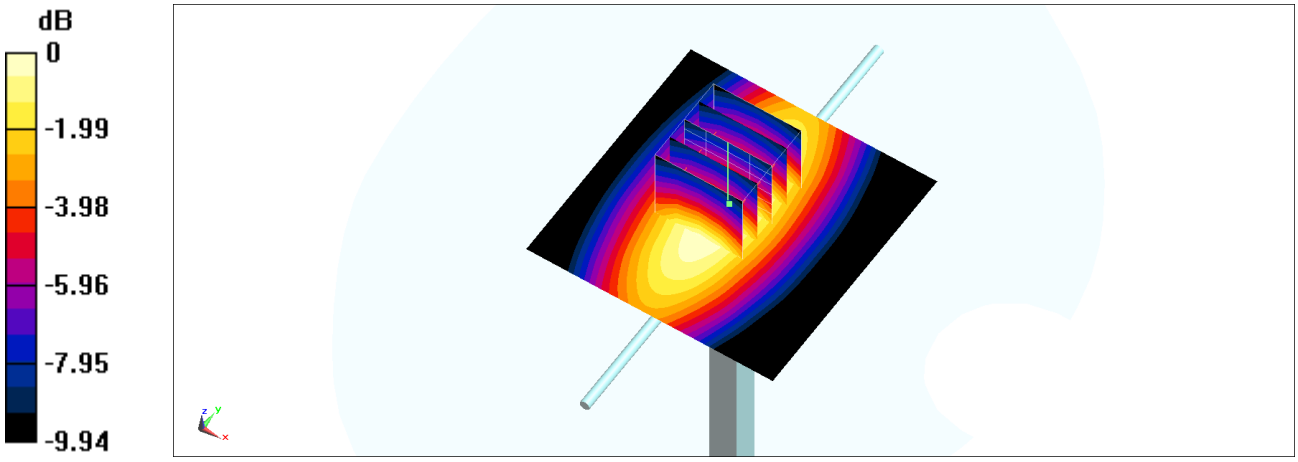

0 dB = 2.64 W/kg = 4.22 dBW/kg

System Check_Head_835MHz

DUT: D835V2-4d167

Communication System: CW; Frequency: 835 MHz;Duty Cycle: 1:1
Medium: HSL_850_200616 Medium parameters used: f = 835 MHz; σ = 0.929 S/m; ε_r = 42.411; ρ = 1000 kg/m^3
Ambient Temperature：23.4 ℃; Liquid Temperature：22.4 ℃

DASY5 Configuration:
- Probe: EX3DV4 - SN3642; ConvF(8.73, 8.73, 8.73) @ 835 MHz; Calibrated: 2020/4/29
- Sensor-Surface: 1.4mm (Mechanical Surface Detection)
- Electronics: DAE4 Sn376; Calibrated: 2019/12/6
- Phantom: SAM_Left; Type: QD000P40CD; Serial: TP:1682
- Measurement SW: DASY52, Version 52.10 (4);SEMCAD X Version 14.6.14 (7483)

Pin=250mW/Area Scan (61x61x1): Interpolated grid: dx=1.500 mm, dy=1.500 mm
Maximum value of SAR (interpolated) = 2.87 W/kg

Pin=250mW/Zoom Scan (5x5x7)/Cube 0: Measurement grid: dx=8mm, dy=8mm, dz=5mm
Reference Value = 59.78 V/m; Power Drift = -0.07 dB
Peak SAR (extrapolated) = 3.41 W/kg
SAR(1 g) = 2.34 W/kg; SAR(10 g) = 1.53 W/kg
Maximum value of SAR (measured) = 3.09 W/kg

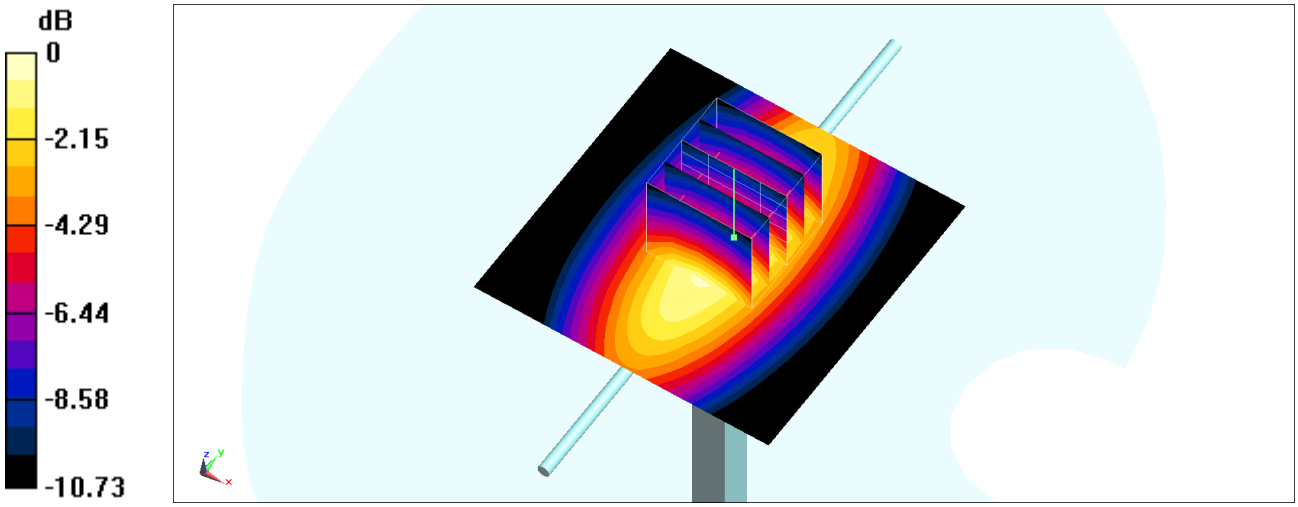

0 dB = 3.09 W/kg = 4.90 dBW/kg

Test Laboratory: Sporton International Inc. SAR/HAC Testing Lab Date: 2020/6/17

System Check_Head_835MHz

DUT: D835V2 - 4d167

Communication System: CW; Frequency: 835 MHz;Duty Cycle: 1:1
Medium: HSL_850_200617 Medium parameters used: f = 835 MHz; σ = 0.878 S/m; ε_r = 42.53; ρ = 1000 kg/m^3
Ambient Temperature：23.6 ℃; Liquid Temperature：22.6 ℃

DASY5 Configuration:
- Probe: ES3DV3 - SN3270; ConvF(6.43, 6.43, 6.43) @ 835 MHz; Calibrated: 2019/9/25
- Sensor-Surface: 3mm (Mechanical Surface Detection)
- Electronics: DAE4 Sn1399; Calibrated: 2020/2/18
- Phantom: SAM_Left; Type: SAM; Serial: 1796
- Measurement SW: DASY52, Version 52.10 (4);SEMCAD X Version 14.6.14 (7483)

Pin=250mW/Area Scan (61x61x1): Interpolated grid: dx=1.500 mm, dy=1.500 mm
Maximum value of SAR (interpolated) = 2.62 W/kg

Pin=250mW/Zoom Scan (5x5x7)/Cube 0: Measurement grid: dx=8mm, dy=8mm, dz=5mm
Reference Value = 56.25 V/m; Power Drift = 0.02 dB
Peak SAR (extrapolated) = 3.35 W/kg
SAR(1 g) = 2.24 W/kg; SAR(10 g) = 1.47 W/kg
Maximum value of SAR (measured) = 2.63 W/kg

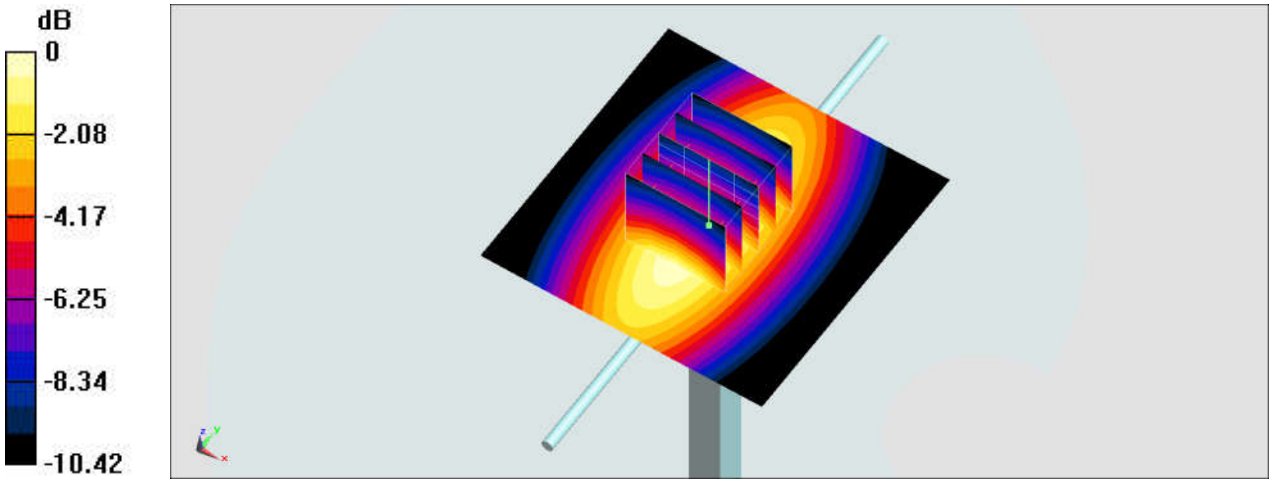

0 dB = 2.63 W/kg = 4.20 dBW/kg

System Check_Head_835MHz

DUT: D835V2-4d167

Communication System: CW; Frequency: 835 MHz;Duty Cycle: 1:1
Medium: HSL_850_200622 Medium parameters used: f = 835 MHz; σ = 0.887 S/m; ε_r = 41.846; ρ = 1000 kg/m^3
Ambient Temperature：23.5 ℃; Liquid Temperature：22.5 ℃

DASY5 Configuration:
- Probe: EX3DV4 - SN3925; ConvF(10.12, 10.12, 10.12) @ 835 MHz; Calibrated: 2019/9/20
- Sensor-Surface: 1.4mm (Mechanical Surface Detection)
- Electronics: DAE4 Sn376; Calibrated: 2019/12/6
- Phantom: SAM_Left; Type: QD000P40CD; Serial: TP:1682
- Measurement SW: DASY52, Version 52.10 (4);SEMCAD X Version 14.6.14 (7483)

Pin=250mW/Area Scan (61x61x1): Interpolated grid: dx=1.500 mm, dy=1.500 mm
Maximum value of SAR (interpolated) = 3.15 W/kg

Pin=250mW/Zoom Scan (5x5x7)/Cube 0: Measurement grid: dx=8mm, dy=8mm, dz=5mm
Reference Value = 62.25 V/m; Power Drift = -0.06 dB
Peak SAR (extrapolated) = 3.54 W/kg
SAR(1 g) = 2.38 W/kg; SAR(10 g) = 1.57 W/kg
Maximum value of SAR (measured) = 3.13 W/kg

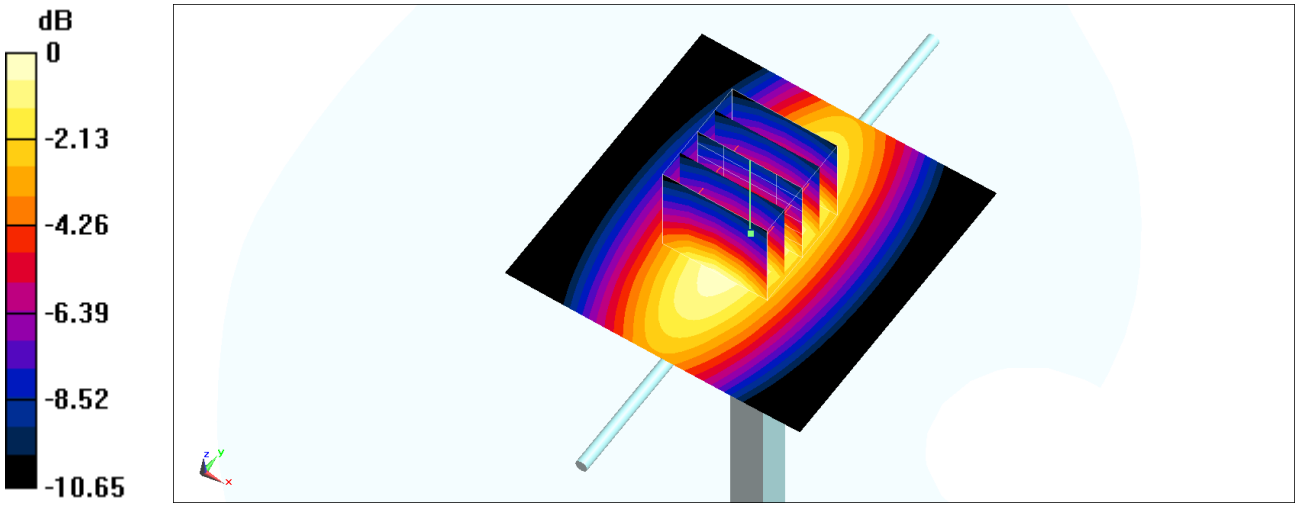

0 dB = 3.13 W/kg = 4.96 dBW/kg

System Check_Head_835MHz

DUT: D835V2-4d167

Communication System: CW; Frequency: 835 MHz;Duty Cycle: 1:1
Medium: HSL_850_200626 Medium parameters used: f = 835 MHz; σ = 0.934 S/m; ε_r = 41.929; ρ = 1000 kg/m^3
Ambient Temperature：23.2 ℃; Liquid Temperature：22.2 ℃

DASY5 Configuration:
- Probe: ES3DV3 - SN3184; ConvF(6.41, 6.41, 6.41) @ 835 MHz; Calibrated: 2019/9/25
- Sensor-Surface: 3mm (Mechanical Surface Detection)
- Electronics: DAE4 Sn916; Calibrated: 2019/12/17
- Phantom: SAM_Right; Type: QD000P40CD; Serial: TP:1683
- Measurement SW: DASY52, Version 52.10 (4);SEMCAD X Version 14.6.14 (7483)

Pin=250mW/Area Scan (61x61x1): Interpolated grid: dx=1.500 mm, dy=1.500 mm
Maximum value of SAR (interpolated) = 2.68 W/kg

Pin=250mW/Zoom Scan (5x5x7)/Cube 0: Measurement grid: dx=8mm, dy=8mm, dz=5mm
Reference Value = 54.58 V/m; Power Drift = -0.11 dB
Peak SAR (extrapolated) = 3.22 W/kg
SAR(1 g) = 2.29 W/kg; SAR(10 g) = 1.54 W/kg
Maximum value of SAR (measured) = 2.64 W/kg

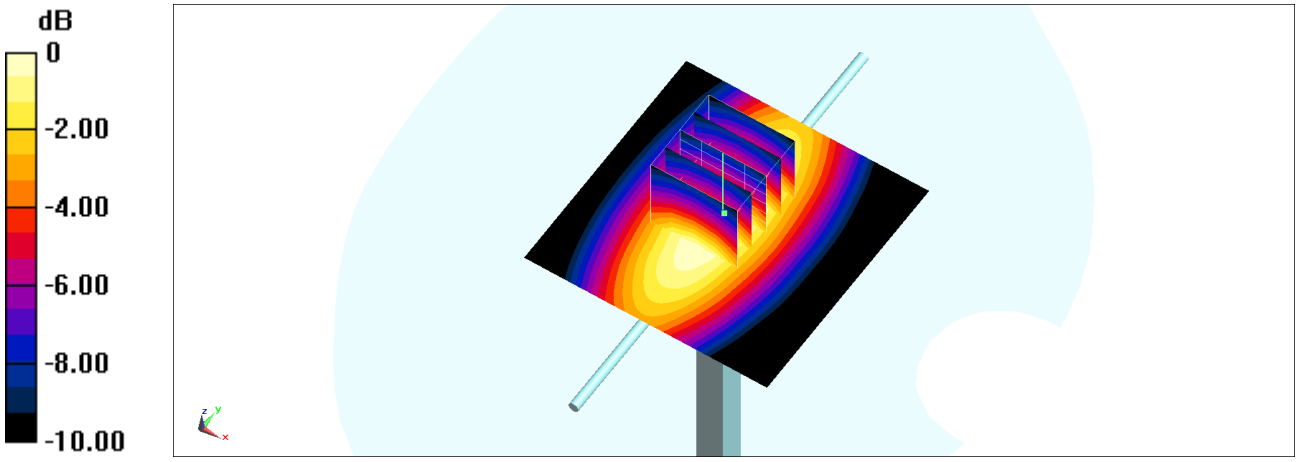

0 dB = 2.64 W/kg = 4.22 dBW/kg

System Check_Head_835MHz

DUT: D835V2-4d167

Communication System: CW; Frequency: 835 MHz;Duty Cycle: 1:1
Medium: HSL_835_200701 Medium parameters used: f = 835 MHz; σ = 0.879 S/m; ε_r = 42.488; ρ = 1000 kg/m^3
Ambient Temperature：23.2 ℃; Liquid Temperature：22.2 ℃

DASY5 Configuration:
- Probe: ES3DV3 - SN3270; ConvF(6.43, 6.43, 6.43) @ 835 MHz; Calibrated: 2019/9/25
- Sensor-Surface: 3mm (Mechanical Surface Detection)
- Electronics: DAE4 Sn1399; Calibrated: 2020/2/18
- Phantom: SAM_Left; Type: SAM; Serial: 1796
- Measurement SW: DASY52, Version 52.10 (4);SEMCAD X Version 14.6.14 (7483)

Pin=250mW/Area Scan (61x61x1): Interpolated grid: dx=1.500 mm, dy=1.500 mm
Maximum value of SAR (interpolated) = 2.62 W/kg

Pin=250mW/Zoom Scan (5x5x7)/Cube 0: Measurement grid: dx=8mm, dy=8mm, dz=5mm
Reference Value = 56.25 V/m; Power Drift = 0.02 dB
Peak SAR (extrapolated) = 3.35 W/kg
SAR(1 g) = 2.25 W/kg; SAR(10 g) = 1.47 W/kg
Maximum value of SAR (measured) = 2.63 W/kg

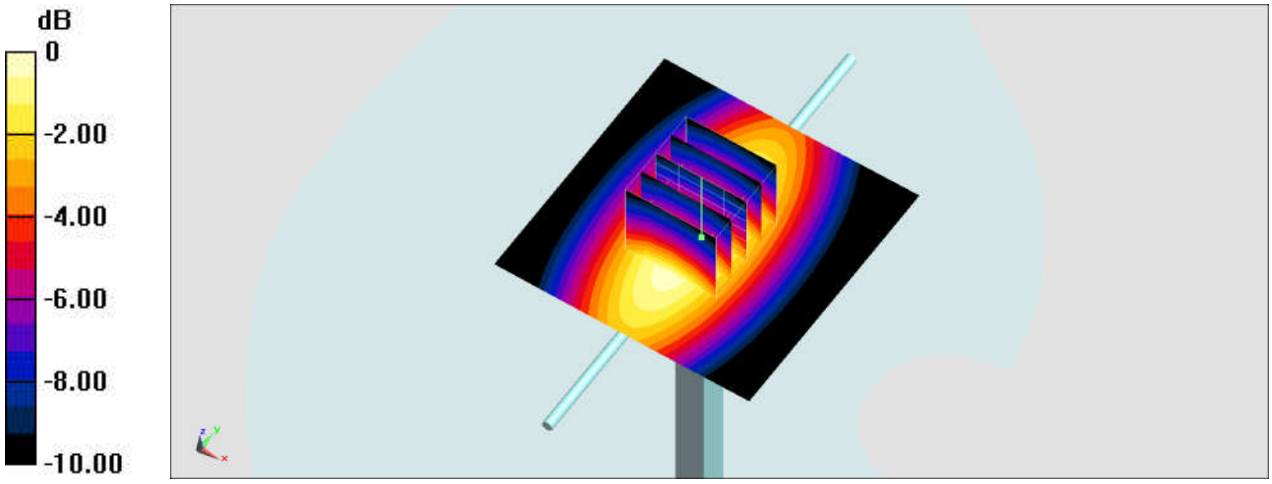

0 dB = 2.63 W/kg = 4.20 dBW/kg

System Check_Head_1750MHz

DUT: D1750V2-1112

Communication System: CW; Frequency: 1750 MHz;Duty Cycle: 1:1
Medium: HSL_1750_200531 Medium parameters used: f = 1750 MHz; σ = 1.355 S/m; ε_r = 41.33; ρ = 1000 kg/m^3
Ambient Temperature：23.4 ℃; Liquid Temperature：22.4 ℃

DASY5 Configuration:
- Probe: EX3DV4 - SN3925; ConvF(8.7, 8.7, 8.7) @ 1750 MHz; Calibrated: 2019/9/20
- Sensor-Surface: 1.4mm (Mechanical Surface Detection)
- Electronics: DAE4 Sn376; Calibrated: 2019/12/6
- Phantom: SAM_Left; Type: QD000P40CD; Serial: TP:1682
- Measurement SW: DASY52, Version 52.10 (4);SEMCAD X Version 14.6.14 (7483)

Pin=250mW/Area Scan (61x61x1): Interpolated grid: dx=1.500 mm, dy=1.500 mm
Maximum value of SAR (interpolated) = 14.3 W/kg

Pin=250mW/Zoom Scan (5x5x7)/Cube 0: Measurement grid: dx=8mm, dy=8mm, dz=5mm
Reference Value = 103.3 V/m; Power Drift = 0.09 dB
Peak SAR (extrapolated) = 16.8 W/kg
SAR(1 g) = 9.15 W/kg; SAR(10 g) = 4.87 W/kg
Maximum value of SAR (measured) = 14.1 W/kg

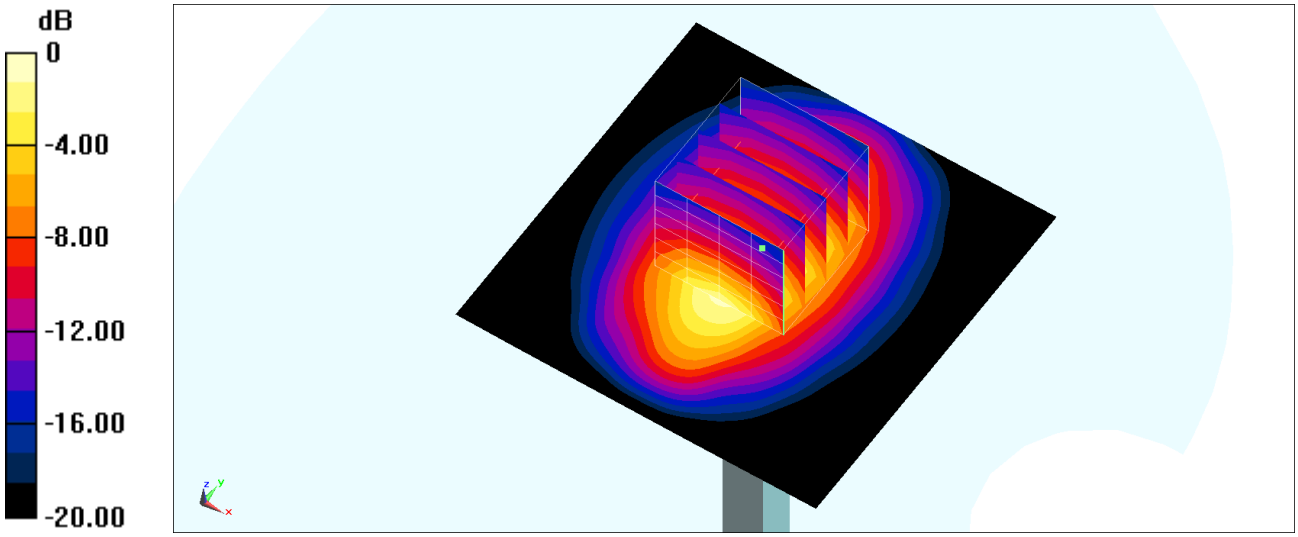

0 dB = 14.1 W/kg = 11.49 dBW/kg

System Check_Head_1750MHz

DUT: D1750V2-1112

Communication System: CW; Frequency: 1750 MHz;Duty Cycle: 1:1
Medium: HSL_1750_200603 Medium parameters used: f = 1750 MHz; σ = 1.382 S/m; ε_r = 40.823; ρ = 1000 kg/m^3
Ambient Temperature：23.6 ℃; Liquid Temperature：22.6 ℃

DASY5 Configuration:
- Probe: EX3DV4 - SN3925; ConvF(8.7, 8.7, 8.7) @ 1750 MHz; Calibrated: 2019/9/20
- Sensor-Surface: 1.4mm (Mechanical Surface Detection)
- Electronics: DAE4 Sn376; Calibrated: 2019/12/6
- Phantom: SAM_Left; Type: QD000P40CD; Serial: TP:1682
- Measurement SW: DASY52, Version 52.10 (4);SEMCAD X Version 14.6.14 (7483)

Pin=250mW/Area Scan (61x61x1): Interpolated grid: dx=1.500 mm, dy=1.500 mm
Maximum value of SAR (interpolated) = 13.3 W/kg

Pin=250mW/Zoom Scan (5x5x7)/Cube 0: Measurement grid: dx=8mm, dy=8mm, dz=5mm
Reference Value = 99.70 V/m; Power Drift = -0.07 dB
Peak SAR (extrapolated) = 17.1 W/kg
SAR(1 g) = 9.39 W/kg; SAR(10 g) = 4.89 W/kg
Maximum value of SAR (measured) = 14.6 W/kg

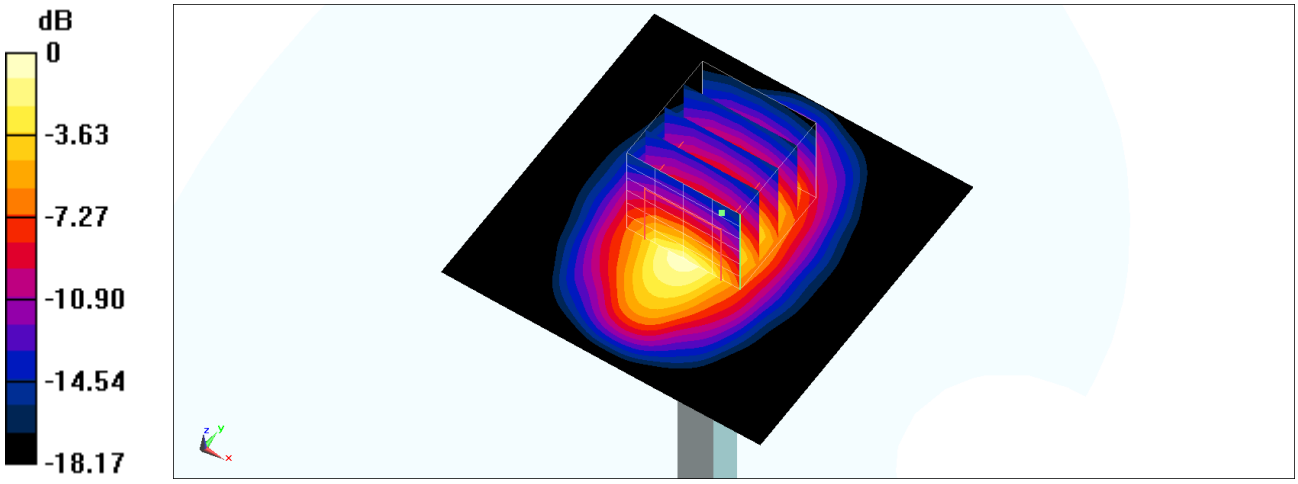

0 dB = 14.6 W/kg = 11.64 dBW/kg

System Check_Head_1750MHz

DUT: D1750V2-1112

Communication System: CW; Frequency: 1750 MHz;Duty Cycle: 1:1
Medium: HSL_1750_200606 Medium parameters used: f = 1750 MHz; σ = 1.363 S/m; ε_r = 40.923; ρ = 1000 kg/m^3
Ambient Temperature：23.2 ℃; Liquid Temperature：22.2 ℃

DASY5 Configuration:
- Probe: EX3DV4 - SN3925; ConvF(8.7, 8.7, 8.7) @ 1750 MHz; Calibrated: 2019/9/20
- Sensor-Surface: 1.4mm (Mechanical Surface Detection)
- Electronics: DAE4 Sn376; Calibrated: 2019/12/6
- Phantom: SAM_Left; Type: QD000P40CD; Serial: TP:1682
- Measurement SW: DASY52, Version 52.10 (4);SEMCAD X Version 14.6.14 (7483)

Pin=250mW/Area Scan (61x61x1): Interpolated grid: dx=1.500 mm, dy=1.500 mm
Maximum value of SAR (interpolated) = 13.1 W/kg

Pin=250mW/Zoom Scan (5x5x7)/Cube 0: Measurement grid: dx=8mm, dy=8mm, dz=5mm
Reference Value = 99.70 V/m; Power Drift = -0.07 dB
Peak SAR (extrapolated) = 16.8 W/kg
SAR(1 g) = 9.26 W/kg; SAR(10 g) = 4.82 W/kg
Maximum value of SAR (measured) = 14.3 W/kg

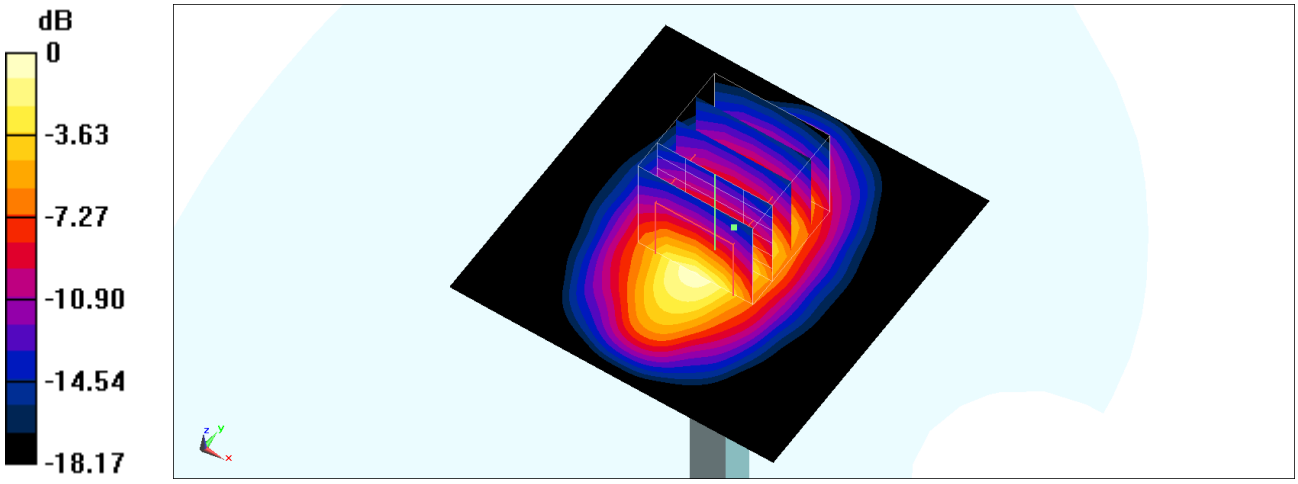

0 dB = 14.3 W/kg = 11.55 dBW/kg

System Check_Head_1750MHz

DUT: D1750V2-1112

Communication System: CW; Frequency: 1750 MHz;Duty Cycle: 1:1
Medium: HSL_1750_200607 Medium parameters used: f = 1750 MHz; σ = 1.383 S/m; ε_r = 39.548; ρ = 1000 kg/m^3
Ambient Temperature：23.5 ℃; Liquid Temperature：22.5 ℃

DASY5 Configuration:
- Probe: EX3DV4 - SN3925; ConvF(8.7, 8.7, 8.7) @ 1750 MHz; Calibrated: 2019/9/20
- Sensor-Surface: 1.4mm (Mechanical Surface Detection)
- Electronics: DAE4 Sn376; Calibrated: 2019/12/6
- Phantom: SAM_Left; Type: QD000P40CD; Serial: TP:1682
- Measurement SW: DASY52, Version 52.10 (4);SEMCAD X Version 14.6.14 (7483)

Pin=250mW/Area Scan (61x61x1): Interpolated grid: dx=1.500 mm, dy=1.500 mm
Maximum value of SAR (interpolated) = 14.6 W/kg

Pin=250mW/Zoom Scan (5x5x7)/Cube 0: Measurement grid: dx=8mm, dy=8mm, dz=5mm
Reference Value = 103.3 V/m; Power Drift = 0.13 dB
Peak SAR (extrapolated) = 17.1 W/kg
SAR(1 g) = 9.34 W/kg; SAR(10 g) = 4.98 W/kg
Maximum value of SAR (measured) = 14.4 W/kg

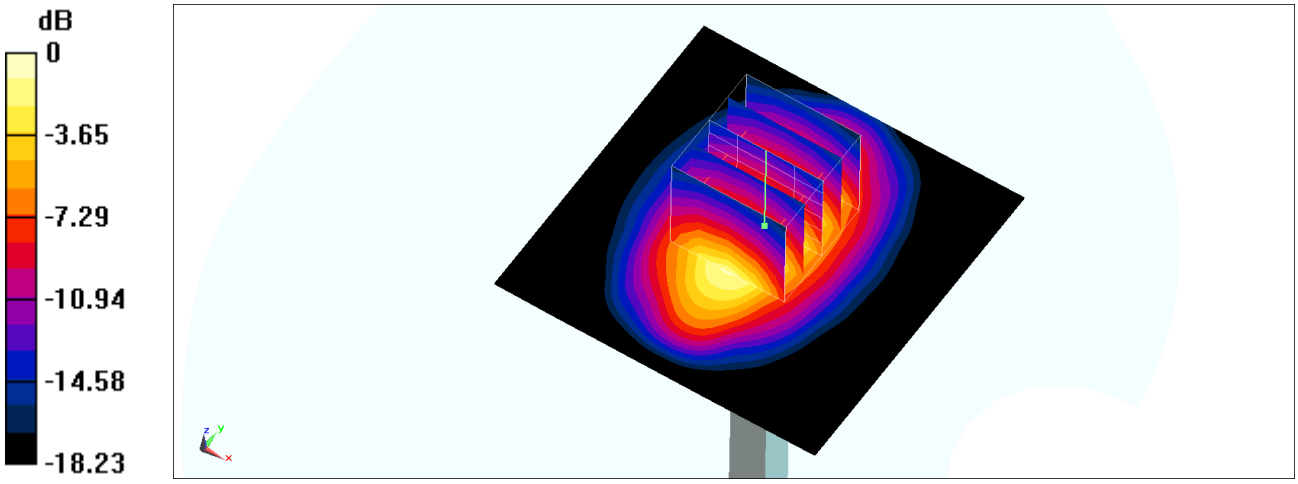

0 dB = 14.4 W/kg = 11.58 dBW/kg

System Check_Head_1750MHz

DUT: D1750V2-1112

Communication System: CW; Frequency: 1750 MHz;Duty Cycle: 1:1
Medium: HSL_1750_200607 Medium parameters used: f = 1750 MHz; σ = 1.383 S/m; ε_r = 39.353; ρ = 1000 kg/m^3
Ambient Temperature：23.5 ℃; Liquid Temperature：22.5 ℃

DASY5 Configuration:
- Probe: ES3DV3 - SN3184; ConvF(5.45, 5.45, 5.45) @ 1750 MHz; Calibrated: 2019/9/25
- Sensor-Surface: 3mm (Mechanical Surface Detection)
- Electronics: DAE4 Sn916; Calibrated: 2019/12/17
- Phantom: SAM_Right; Type: QD000P40CD; Serial: TP:1683
- Measurement SW: DASY52, Version 52.10 (4);SEMCAD X Version 14.6.14 (7483)

Pin=250mW/Area Scan (61x61x1): Interpolated grid: dx=1.500 mm, dy=1.500 mm
Maximum value of SAR (interpolated) = 11.6 W/kg

Pin=250mW/Zoom Scan (5x5x7)/Cube 0: Measurement grid: dx=8mm, dy=8mm, dz=5mm
Reference Value = 89.30 V/m; Power Drift = 0.13 dB
Peak SAR (extrapolated) = 16.0 W/kg
SAR(1 g) = 8.89 W/kg; SAR(10 g) = 4.73 W/kg
Maximum value of SAR (measured) = 11.2 W/kg

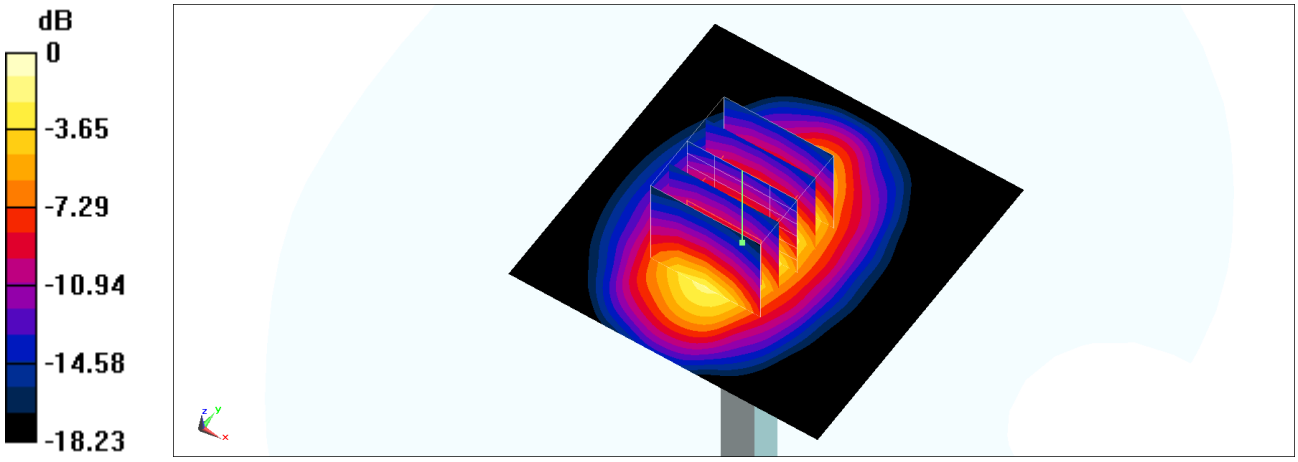

0 dB = 11.2 W/kg = 10.49 dBW/kg

System Check_Head_1750MHz

DUT: D1750V2-1112

Communication System: CW; Frequency: 1750 MHz;Duty Cycle: 1:1
Medium: HSL_1750_200626 Medium parameters used: f = 1750 MHz; σ = 1.371 S/m; ε_r = 41.322; ρ = 1000 kg/m^3
Ambient Temperature：23.3 ℃; Liquid Temperature：22.3 ℃

DASY5 Configuration:
- Probe: ES3DV3 - SN3184; ConvF(5.45, 5.45, 5.45) @ 1750 MHz; Calibrated: 2019/9/25
- Sensor-Surface: 3mm (Mechanical Surface Detection)
- Electronics: DAE4 Sn916; Calibrated: 2019/12/17
- Phantom: SAM_Right; Type: QD000P40CD; Serial: TP:1683
- Measurement SW: DASY52, Version 52.10 (4);SEMCAD X Version 14.6.14 (7483)

Pin=250mW/Area Scan (61x61x1): Interpolated grid: dx=1.500 mm, dy=1.500 mm
Maximum value of SAR (interpolated) = 11.5 W/kg

Pin=250mW/Zoom Scan (5x5x7)/Cube 0: Measurement grid: dx=8mm, dy=8mm, dz=5mm
Reference Value = 89.30 V/m; Power Drift = 0.03 dB
Peak SAR (extrapolated) = 15.8 W/kg
SAR(1 g) = 8.81 W/kg; SAR(10 g) = 4.69 W/kg
Maximum value of SAR (measured) = 11.1 W/kg

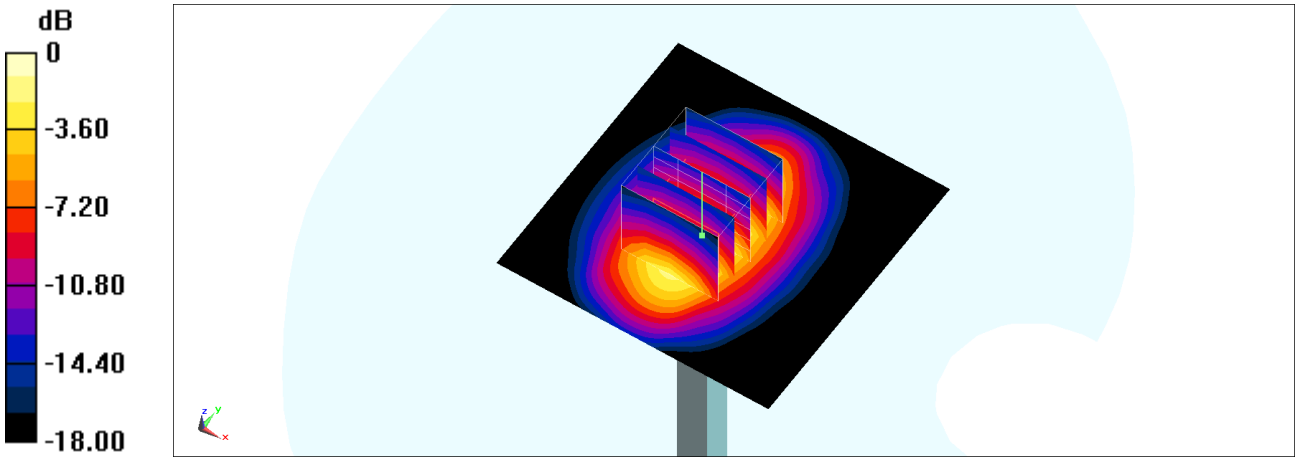

0 dB = 11.1 W/kg = 10.45 dBW/kg

System Check_Head_1900MHz

DUT: D1900V2-5d185

Communication System: CW; Frequency: 1900 MHz;Duty Cycle: 1:1
Medium: HSL_1900_200531 Medium parameters used: f = 1900 MHz; σ = 1.401 S/m; ε_r = 40.465; ρ = 1000 kg/m^3
Ambient Temperature：23.4 ℃; Liquid Temperature：22.4 ℃

DASY5 Configuration:
- Probe: EX3DV4 - SN3925; ConvF(8.35, 8.35, 8.35) @ 1900 MHz; Calibrated: 2019/9/20
- Sensor-Surface: 1.4mm (Mechanical Surface Detection)
- Electronics: DAE4 Sn376; Calibrated: 2019/12/6
- Phantom: SAM_Left; Type: QD000P40CD; Serial: TP:1682
- Measurement SW: DASY52, Version 52.10 (4);SEMCAD X Version 14.6.14 (7483)

Pin=250mW/Area Scan (61x61x1): Interpolated grid: dx=1.500 mm, dy=1.500 mm
Maximum value of SAR (interpolated) = 14.7 W/kg

Pin=250mW/Zoom Scan (5x5x7)/Cube 0: Measurement grid: dx=8mm, dy=8mm, dz=5mm
Reference Value = 103.6 V/m; Power Drift = 0.08 dB
Peak SAR (extrapolated) = 17.3 W/kg
SAR(1 g) = 9.35 W/kg; SAR(10 g) = 4.84 W/kg
Maximum value of SAR (measured) = 14.6 W/kg

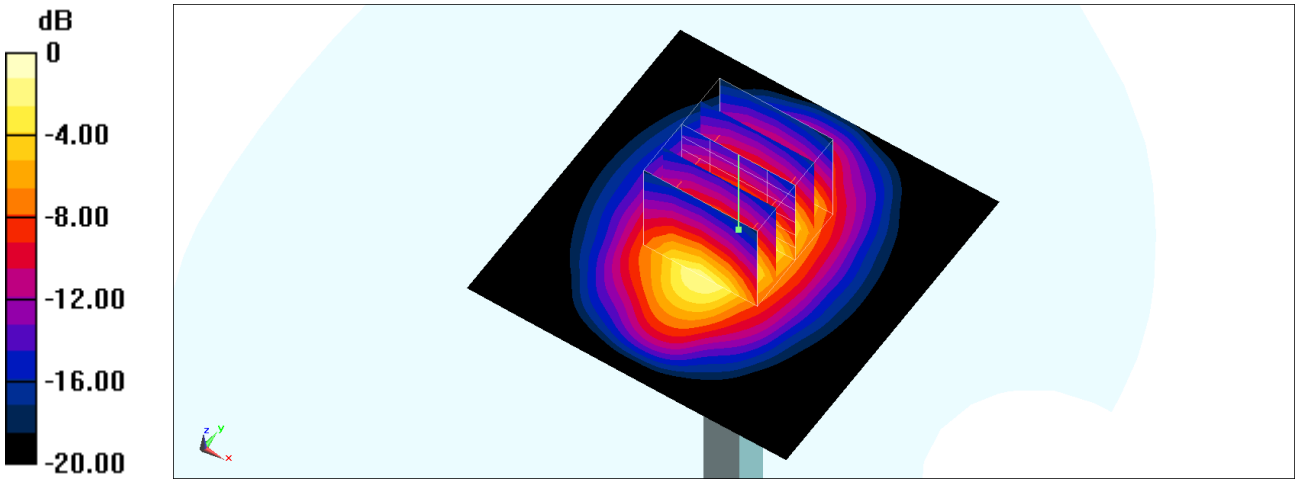

0 dB = 14.6 W/kg = 11.64 dBW/kg

System Check_Head_1900MHz

DUT: D1900V2-5d185

Communication System: CW; Frequency: 1900 MHz;Duty Cycle: 1:1
Medium: HSL_1900_200603 Medium parameters used: f = 1900 MHz; σ = 1.41 S/m; ε_r = 40.385; ρ = 1000 kg/m^3
Ambient Temperature：23.6 ℃; Liquid Temperature：22.6 ℃

DASY5 Configuration:
- Probe: EX3DV4 - SN3925; ConvF(8.35, 8.35, 8.35) @ 1900 MHz; Calibrated: 2019/9/20
- Sensor-Surface: 1.4mm (Mechanical Surface Detection)
- Electronics: DAE4 Sn376; Calibrated: 2019/12/6
- Phantom: SAM_Left; Type: QD000P40CD; Serial: TP:1682
- Measurement SW: DASY52, Version 52.10 (4);SEMCAD X Version 14.6.14 (7483)

Pin=250mW/Area Scan (61x61x1): Interpolated grid: dx=1.500 mm, dy=1.500 mm
Maximum value of SAR (interpolated) = 16.0 W/kg

Pin=250mW/Zoom Scan (5x5x7)/Cube 0: Measurement grid: dx=8mm, dy=8mm, dz=5mm
Reference Value = 102.2 V/m; Power Drift = -0.18 dB
Peak SAR (extrapolated) = 19.7 W/kg
SAR(1 g) = 10.4 W/kg; SAR(10 g) = 5.29 W/kg
Maximum value of SAR (measured) = 16.4 W/kg

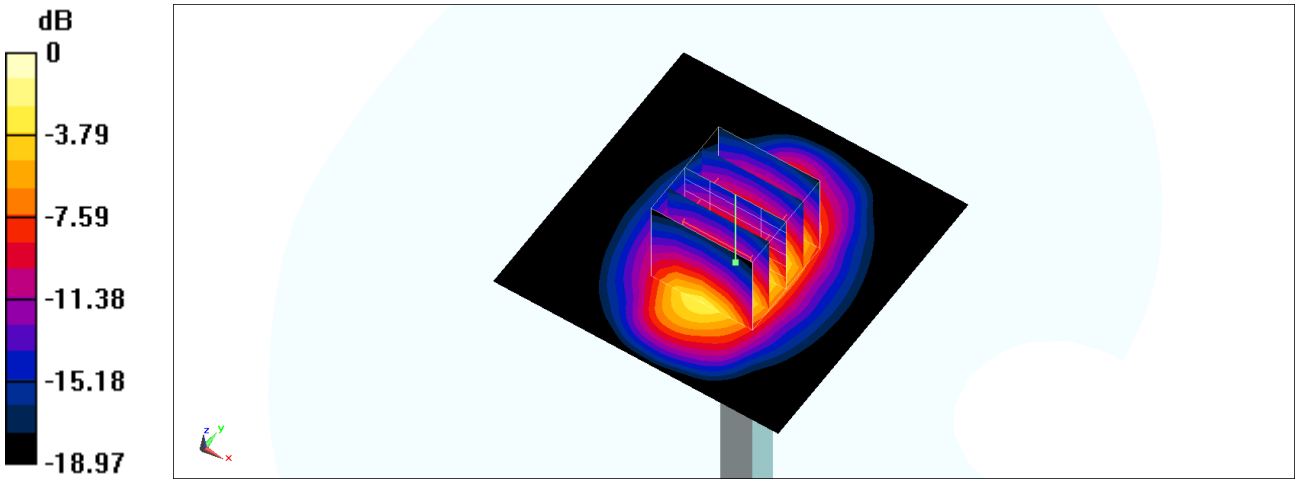

0 dB = 16.4 W/kg = 12.15 dBW/kg

System Check_Head_1900MHz

DUT: D1900V2-5d185

Communication System: CW; Frequency: 1900 MHz;Duty Cycle: 1:1
Medium: HSL_1900_200604 Medium parameters used: f = 1900 MHz; σ = 1.422 S/m; ε_r = 41.123; ρ = 1000 kg/m^3
Ambient Temperature：23.5 ℃; Liquid Temperature：22.5 ℃

DASY5 Configuration:
- Probe: EX3DV4 - SN3925; ConvF(8.35, 8.35, 8.35) @ 1900 MHz; Calibrated: 2019/9/20
- Sensor-Surface: 1.4mm (Mechanical Surface Detection)
- Electronics: DAE4 Sn376; Calibrated: 2019/12/6
- Phantom: SAM_Left; Type: QD000P40CD; Serial: TP:1682
- Measurement SW: DASY52, Version 52.10 (4);SEMCAD X Version 14.6.14 (7483)

Pin=250mW/Area Scan (61x61x1): Interpolated grid: dx=1.500 mm, dy=1.500 mm
Maximum value of SAR (interpolated) = 14.1 W/kg

Pin=250mW/Zoom Scan (5x5x7)/Cube 0: Measurement grid: dx=8mm, dy=8mm, dz=5mm
Reference Value = 101.9 V/m; Power Drift = 0.08 dB
Peak SAR (extrapolated) = 16.8 W/kg
SAR(1 g) = 9.12 W/kg; SAR(10 g) = 4.73 W/kg
Maximum value of SAR (measured) = 14.2 W/kg

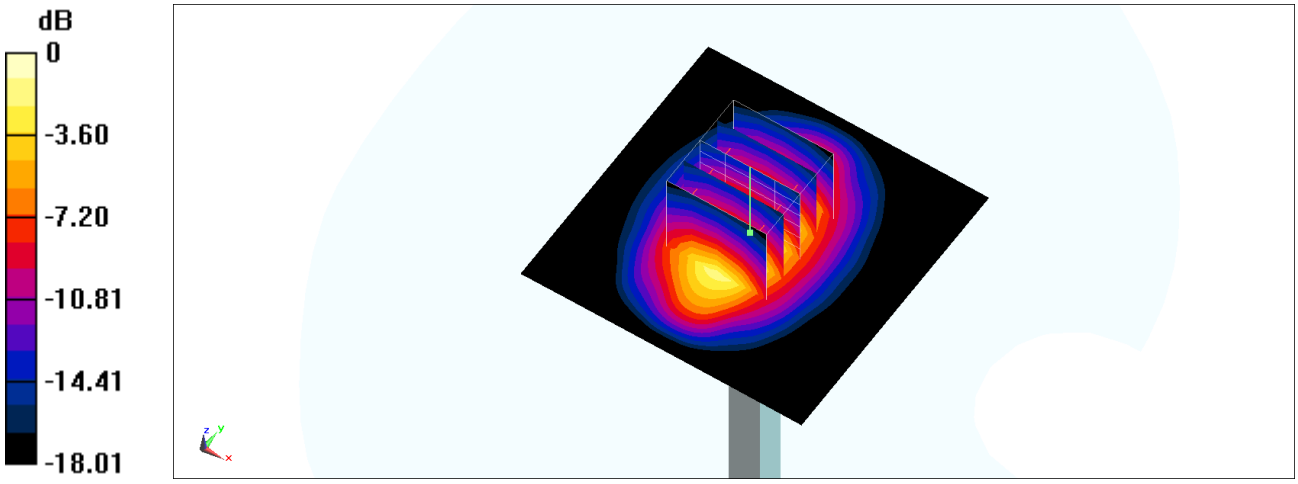

0 dB = 14.2 W/kg = 11.52 dBW/kg

System Check_Head_1900MHz

DUT: D1900V2-5d185

Communication System: CW; Frequency: 1900 MHz;Duty Cycle: 1:1
Medium: HSL_1900_200606 Medium parameters used: f = 1900 MHz; σ = 1.444 S/m; ε_r = 39.959; ρ = 1000 kg/m^3
Ambient Temperature：23.2 ℃; Liquid Temperature：22.2 ℃

DASY5 Configuration:
- Probe: EX3DV4 - SN3925; ConvF(8.35, 8.35, 8.35) @ 1900 MHz; Calibrated: 2019/9/20
- Sensor-Surface: 1.4mm (Mechanical Surface Detection)
- Electronics: DAE4 Sn376; Calibrated: 2019/12/6
- Phantom: SAM_Left; Type: QD000P40CD; Serial: TP:1682
- Measurement SW: DASY52, Version 52.10 (4);SEMCAD X Version 14.6.14 (7483)

Pin=250mW/Area Scan (61x61x1): Interpolated grid: dx=1.500 mm, dy=1.500 mm
Maximum value of SAR (interpolated) = 15.2 W/kg

Pin=250mW/Zoom Scan (5x5x7)/Cube 0: Measurement grid: dx=8mm, dy=8mm, dz=5mm
Reference Value = 103.6 V/m; Power Drift = 0.08 dB
Peak SAR (extrapolated) = 17.8 W/kg
SAR(1 g) = 9.63 W/kg; SAR(10 g) = 4.99 W/kg
Maximum value of SAR (measured) = 15.1 W/kg

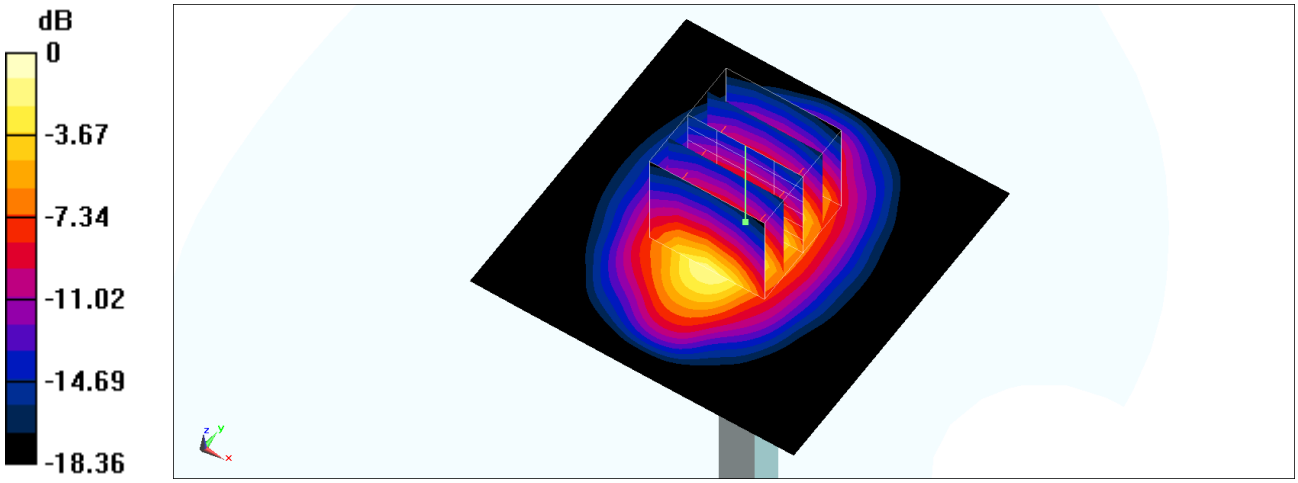

0 dB = 15.1 W/kg = 11.79 dBW/kg

System Check_Head_1900MHz

DUT: D1900V2-5d185

Communication System: CW; Frequency: 1900 MHz;Duty Cycle: 1:1
Medium: HSL_1900_200623 Medium parameters used: f = 1900 MHz; σ = 1.432 S/m; ε_r = 40.334; ρ = 1000 kg/m^3
Ambient Temperature：23.6 ℃; Liquid Temperature：22.6 ℃

DASY5 Configuration:
- Probe: EX3DV4 - SN3925; ConvF(8.35, 8.35, 8.35) @ 1900 MHz; Calibrated: 2019/9/20
- Sensor-Surface: 1.4mm (Mechanical Surface Detection)
- Electronics: DAE4 Sn376; Calibrated: 2019/12/6
- Phantom: SAM_Left; Type: QD000P40CD; Serial: TP:1682
- Measurement SW: DASY52, Version 52.10 (4);SEMCAD X Version 14.6.14 (7483)

Pin=250mW/Area Scan (61x61x1): Interpolated grid: dx=1.500 mm, dy=1.500 mm
Maximum value of SAR (interpolated) = 14.8 W/kg

Pin=250mW/Zoom Scan (5x5x7)/Cube 0: Measurement grid: dx=8mm, dy=8mm, dz=5mm
Reference Value = 99.89 V/m; Power Drift = 0.09 dB
Peak SAR (extrapolated) = 18.0 W/kg
SAR(1 g) = 9.73 W/kg; SAR(10 g) = 5.05 W/kg
Maximum value of SAR (measured) = 15.2 W/kg

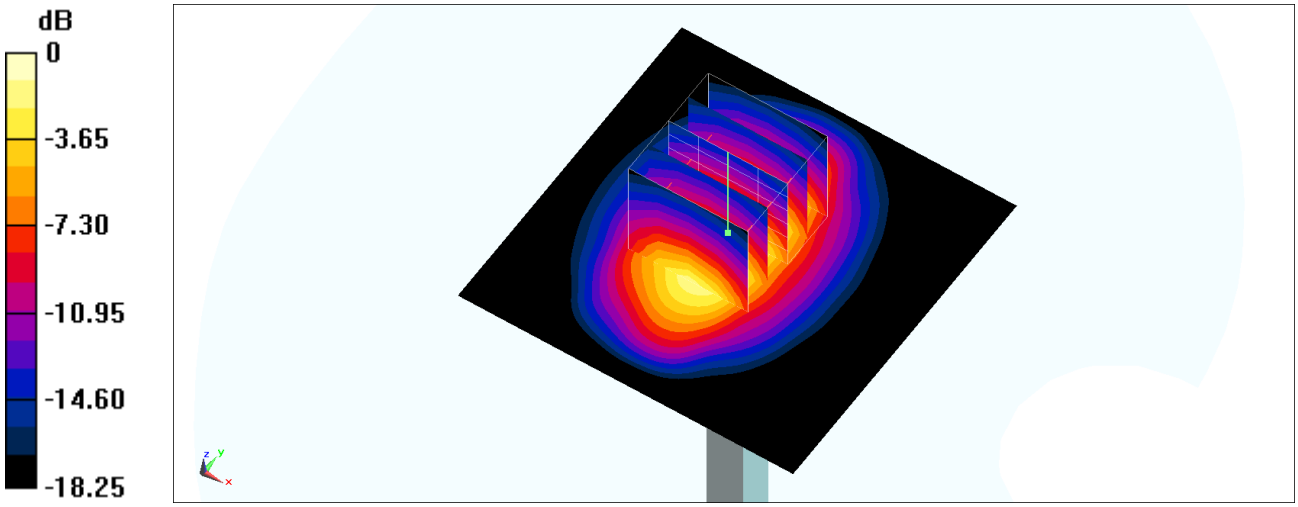

0 dB = 15.2 W/kg = 11.82 dBW/kg

System Check_Head_1900MHz

DUT: D1900V2-5d185

Communication System: CW; Frequency: 1900 MHz;Duty Cycle: 1:1
Medium: HSL_1900_200626 Medium parameters used: f = 1900 MHz; σ = 1.421 S/m; ε_r = 39.714; ρ = 1000 kg/m^3
Ambient Temperature：23.2 ℃; Liquid Temperature：22.2 ℃

DASY5 Configuration:
- Probe: ES3DV3 - SN3184; ConvF(5.23, 5.23, 5.23) @ 1900 MHz; Calibrated: 2019/9/25
- Sensor-Surface: 3mm (Mechanical Surface Detection)
- Electronics: DAE4 Sn916; Calibrated: 2019/12/17
- Phantom: SAM_Right; Type: QD000P40CD; Serial: TP:1683
- Measurement SW: DASY52, Version 52.10 (4);SEMCAD X Version 14.6.14 (7483)

Pin=250mW/Area Scan (61x61x1): Interpolated grid: dx=1.500 mm, dy=1.500 mm
Maximum value of SAR (interpolated) = 13.5 W/kg

Pin=250mW/Zoom Scan (5x5x7)/Cube 0: Measurement grid: dx=8mm, dy=8mm, dz=5mm
Reference Value = 88.32 V/m; Power Drift = 0.09 dB
Peak SAR (extrapolated) = 16.2 W/kg
SAR(1 g) = 9.64 W/kg; SAR(10 g) = 5.15 W/kg
Maximum value of SAR (measured) = 11.0 W/kg

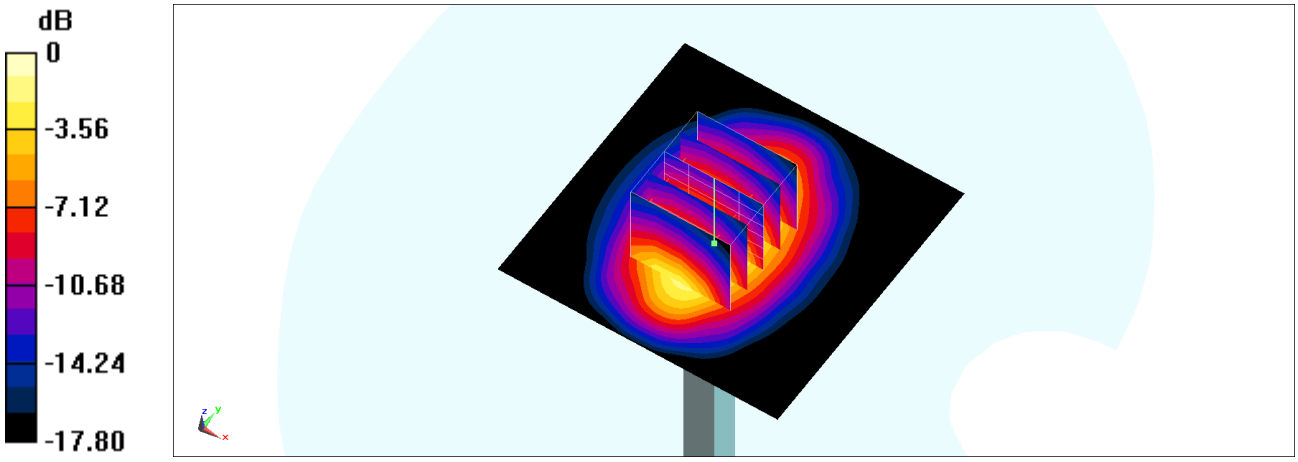

0 dB = 11.0 W/kg = 10.41 dBW/kg

System Check_Head_1900MHz

DUT: D1900V2-5d185

Communication System: CW; Frequency: 1900 MHz;Duty Cycle: 1:1
Medium: HSL_1900_200627 Medium parameters used: f = 1900 MHz; σ = 1.401 S/m; ε_r = 39.575; ρ = 1000 kg/m^3
Ambient Temperature：23.5 ℃; Liquid Temperature：22.5 ℃

DASY5 Configuration:
- Probe: ES3DV3 - SN3184; ConvF(5.23, 5.23, 5.23) @ 1900 MHz; Calibrated: 2019/9/25
- Sensor-Surface: 3mm (Mechanical Surface Detection)
- Electronics: DAE4 Sn916; Calibrated: 2019/12/17
- Phantom: SAM_Right; Type: QD000P40CD; Serial: TP:1683
- Measurement SW: DASY52, Version 52.10 (4);SEMCAD X Version 14.6.14 (7483)

Pin=250mW/Area Scan (61x61x1): Interpolated grid: dx=1.500 mm, dy=1.500 mm
Maximum value of SAR (interpolated) = 13.3 W/kg

Pin=250mW/Zoom Scan (5x5x7)/Cube 0: Measurement grid: dx=8mm, dy=8mm, dz=5mm
Reference Value = 88.32 V/m; Power Drift = -0.04 dB
Peak SAR (extrapolated) = 16.0 W/kg
SAR(1 g) = 9.5 W/kg; SAR(10 g) = 5.07 W/kg
Maximum value of SAR (measured) = 10.8 W/kg

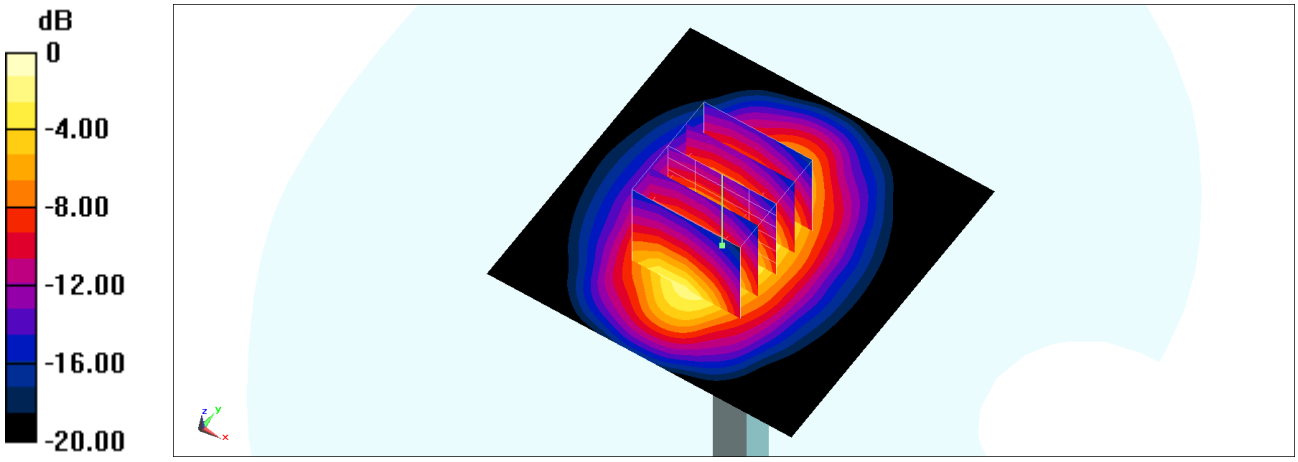

0 dB = 10.8 W/kg = 10.33 dBW/kg

System Check_Head_2300MHz

DUT: D2300V2-1006

Communication System: CW ; Frequency: 2300 MHz;Duty Cycle: 1:1
Medium: HSL_2300_200602 Medium parameters used: f = 2300 MHz; σ = 1.692 S/m; ε_r = 39.21; ρ = 1000 kg/m^3
Ambient Temperature：23.5 ℃; Liquid Temperature：22.5 ℃

DASY5 Configuration:
- Probe: ES3DV3 - SN3184; ConvF(4.96, 4.96, 4.96) @ 2300 MHz; Calibrated: 2019/9/25
- Sensor-Surface: 3mm (Mechanical Surface Detection)
- Electronics: DAE4 Sn916; Calibrated: 2019/12/17
- Phantom: SAM_Right; Type: QD000P40CD; Serial: TP:1683
- Measurement SW: DASY52, Version 52.10 (4);SEMCAD X Version 14.6.14 (7483)

Pin=250mW/Area Scan (71x71x1): Interpolated grid: dx=1.200 mm, dy=1.200 mm
Maximum value of SAR (interpolated) = 15.6 W/kg

Pin=250mW/Zoom Scan (7x7x7)/Cube 0: Measurement grid: dx=5mm, dy=5mm, dz=5mm
Reference Value = 98.81 V/m; Power Drift = -0.09 dB
Peak SAR (extrapolated) = 22.1 W/kg
SAR(1 g) = 11.4 W/kg; SAR(10 g) = 5.53 W/kg
Maximum value of SAR (measured) = 14.9 W/kg

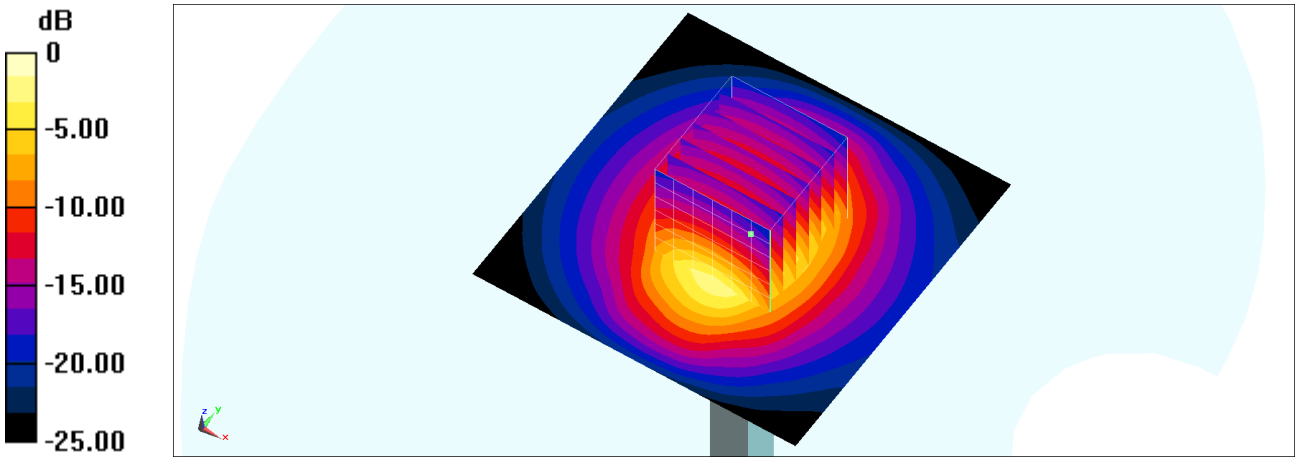

0 dB = 14.9 W/kg = 11.73 dBW/kg

System Check_Head_2300MHz

DUT: D2300V2-1006

Communication System: CW ; Frequency: 2300 MHz;Duty Cycle: 1:1
Medium: HSL_2300_200606 Medium parameters used: f = 2300 MHz; σ = 1.681 S/m; ε_r = 39.29; ρ = 1000 kg/m^3
Ambient Temperature：23.6 ℃; Liquid Temperature：22.6 ℃

DASY5 Configuration:
- Probe: ES3DV3 - SN3184; ConvF(4.96, 4.96, 4.96) @ 2300 MHz; Calibrated: 2019/9/25
- Sensor-Surface: 3mm (Mechanical Surface Detection)
- Electronics: DAE4 Sn916; Calibrated: 2019/12/17
- Phantom: SAM_Right; Type: QD000P40CD; Serial: TP:1683
- Measurement SW: DASY52, Version 52.10 (4);SEMCAD X Version 14.6.14 (7483)

Pin=250mW/Area Scan (71x71x1): Interpolated grid: dx=1.200 mm, dy=1.200 mm
Maximum value of SAR (interpolated) = 15.5 W/kg

Pin=250mW/Zoom Scan (7x7x7)/Cube 0: Measurement grid: dx=5mm, dy=5mm, dz=5mm
Reference Value = 98.81 V/m; Power Drift = -0.09 dB
Peak SAR (extrapolated) = 22.0 W/kg
SAR(1 g) = 11.3 W/kg; SAR(10 g) = 5.5 W/kg
Maximum value of SAR (measured) = 14.8 W/kg

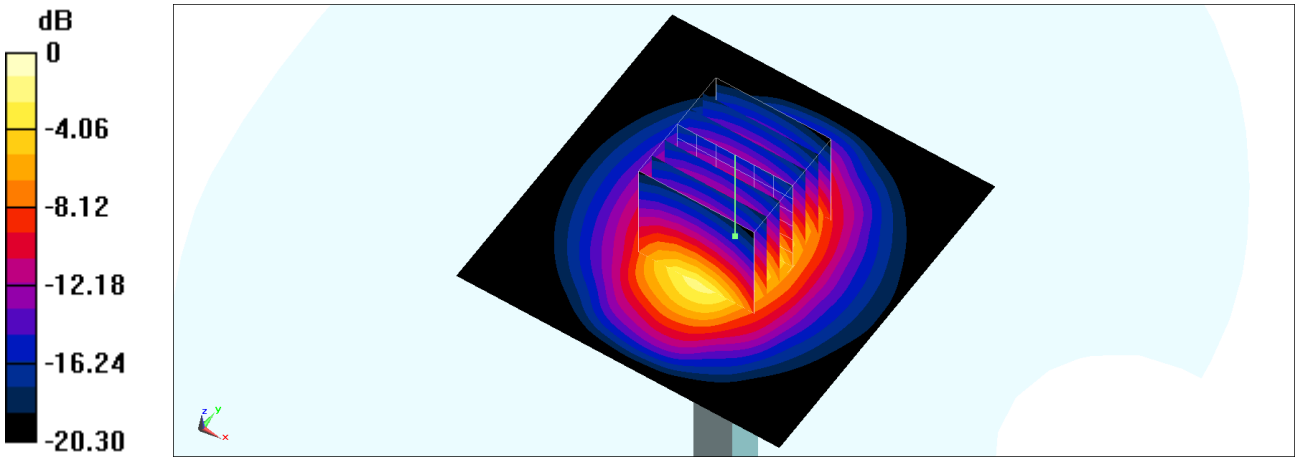

0 dB = 14.8 W/kg = 11.70 dBW/kg

System Check_Head_2300MHz

DUT: D2300V2-1006

Communication System: CW ; Frequency: 2300 MHz;Duty Cycle: 1:1
Medium: HSL_2300_200627 Medium parameters used: f = 2300 MHz; σ = 1.668 S/m; ε_r = 39.368; ρ = 1000 kg/m^3
Ambient Temperature：23.5 ℃; Liquid Temperature：22.5 ℃

DASY5 Configuration:
- Probe: ES3DV3 - SN3184; ConvF(4.96, 4.96, 4.96) @ 2300 MHz; Calibrated: 2019/9/25
- Sensor-Surface: 3mm (Mechanical Surface Detection)
- Electronics: DAE4 Sn916; Calibrated: 2019/12/17
- Phantom: SAM_Right; Type: QD000P40CD; Serial: TP:1683
- Measurement SW: DASY52, Version 52.10 (4);SEMCAD X Version 14.6.14 (7483)

Pin=250mW/Area Scan (71x71x1): Interpolated grid: dx=1.200 mm, dy=1.200 mm
Maximum value of SAR (interpolated) = 15.4 W/kg

Pin=250mW/Zoom Scan (7x7x7)/Cube 0: Measurement grid: dx=5mm, dy=5mm, dz=5mm
Reference Value = 98.81 V/m; Power Drift = -0.09 dB
Peak SAR (extrapolated) = 21.8 W/kg
SAR(1 g) = 11.2 W/kg; SAR(10 g) = 5.45 W/kg
Maximum value of SAR (measured) = 14.6 W/kg

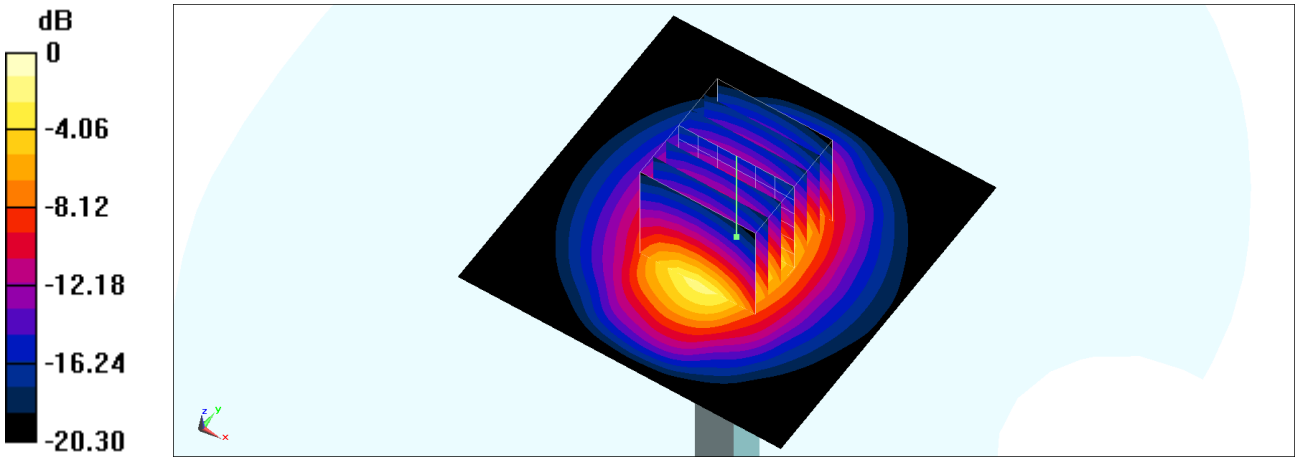

0 dB = 14.6 W/kg = 11.64 dBW/kg

System Check_Head_2450MHz

DUT: D2450V2-736

Communication System: CW; Frequency: 2450 MHz;Duty Cycle: 1:1
Medium: HSL_2450_200529 Medium parameters used : f = 2450 MHz; σ = 1.798 S/m; ε_r = 39.012; ρ = 1000 kg/m^3
Ambient Temperature：23.5 ℃; Liquid Temperature：22.5 ℃

DASY5 Configuration:
- Probe: EX3DV4 - SN3925; ConvF(7.6, 7.6, 7.6) @ 2450 MHz; Calibrated: 2019/9/20
- Sensor-Surface: 1.4mm (Mechanical Surface Detection)
- Electronics: DAE4 Sn376; Calibrated: 2019/12/6
- Phantom: SAM_Left; Type: QD000P40CD; Serial: TP:1682
- Measurement SW: DASY52, Version 52.10 (4);SEMCAD X Version 14.6.14 (7483)

Pin=250mW/Area Scan (71x71x1): Interpolated grid: dx=1.200 mm, dy=1.200 mm
Maximum value of SAR (interpolated) = 21.4 W/kg

Pin=250mW/Zoom Scan (7x7x7)/Cube 0: Measurement grid: dx=5mm, dy=5mm, dz=5mm
Reference Value = 117.2 V/m; Power Drift = -0.13 dB
Peak SAR (extrapolated) = 26.2 W/kg
SAR(1 g) = 12.4 W/kg; SAR(10 g) = 5.87 W/kg
Maximum value of SAR (measured) = 20.8 W/kg

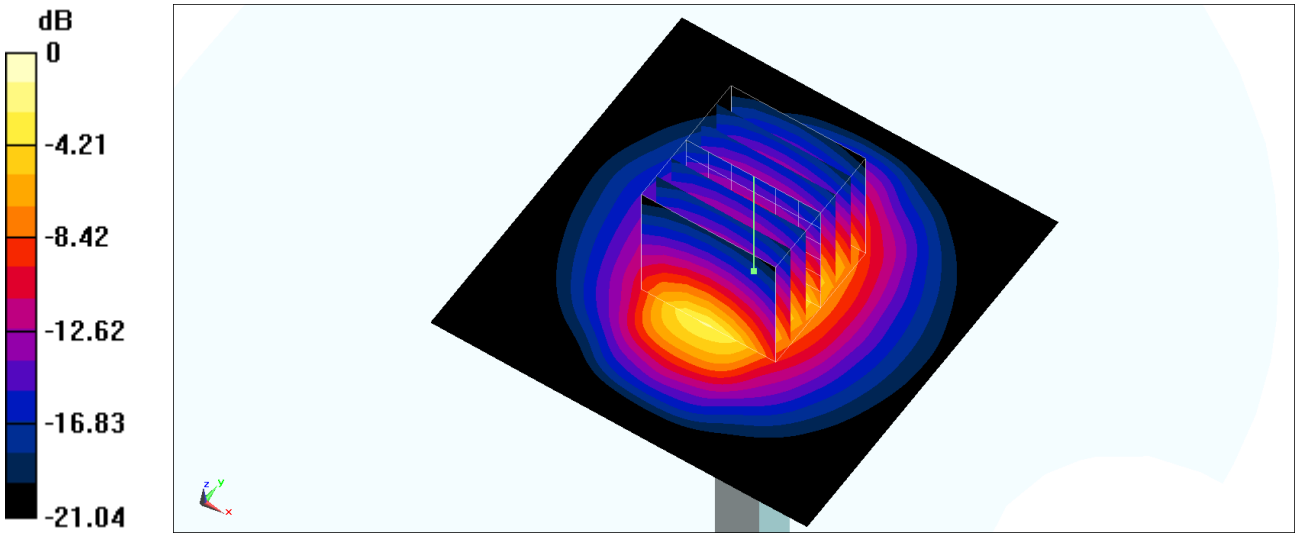

0 dB = 20.8 W/kg = 13.18 dBW/kg

System Check_Head_2450MHz

DUT: D2450V2-736

Communication System: CW; Frequency: 2450 MHz;Duty Cycle: 1:1
Medium: HSL_2450_200530 Medium parameters used : f = 2450 MHz; σ = 1.842 S/m; ε_r = 38.487; ρ = 1000 kg/m^3
Ambient Temperature：23.2 ℃; Liquid Temperature：22.2 ℃

DASY5 Configuration:
- Probe: ES3DV3 - SN3184; ConvF(4.69, 4.69, 4.69) @ 2450 MHz; Calibrated: 2019/9/25
- Sensor-Surface: 3mm (Mechanical Surface Detection)
- Electronics: DAE4 Sn916; Calibrated: 2019/12/17
- Phantom: SAM_Right; Type: QD000P40CD; Serial: TP:1683
- Measurement SW: DASY52, Version 52.10 (4);SEMCAD X Version 14.6.14 (7483)

Pin=250mW/Area Scan (71x71x1): Interpolated grid: dx=1.200 mm, dy=1.200 mm
Maximum value of SAR (interpolated) = 18.1 W/kg

Pin=250mW/Zoom Scan (7x7x7)/Cube 0: Measurement grid: dx=5mm, dy=5mm, dz=5mm
Reference Value = 94.81 V/m; Power Drift = -0.08 dB
Peak SAR (extrapolated) = 22.0 W/kg
SAR(1 g) = 12.9 W/kg; SAR(10 g) = 6.33 W/kg
Maximum value of SAR (measured) = 16.6 W/kg

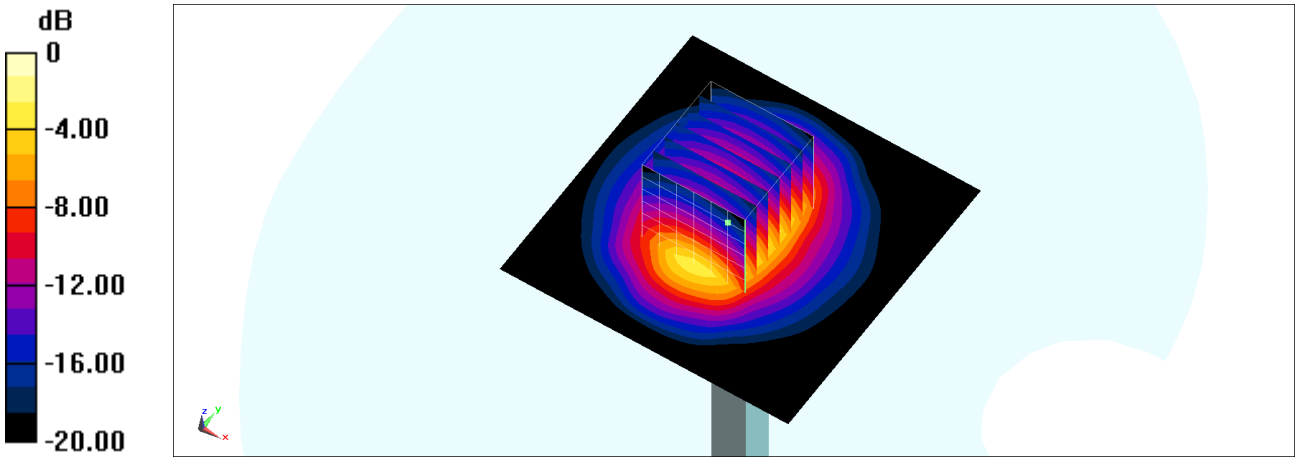

0 dB = 16.6 W/kg = 12.20 dBW/kg

System Check_Head_2450MHz

DUT: D2450V2-736

Communication System: CW; Frequency: 2450 MHz;Duty Cycle: 1:1
Medium: HSL_2450_200611 Medium parameters used : f = 2450 MHz; σ = 1.759 S/m; ε_r = 40.16; ρ = 1000 kg/m^3
Ambient Temperature：23.6 ℃; Liquid Temperature：22.6 ℃

DASY5 Configuration:
- Probe: ES3DV3 - SN3184; ConvF(4.69, 4.69, 4.69) @ 2450 MHz; Calibrated: 2019/9/25
- Sensor-Surface: 3mm (Mechanical Surface Detection)
- Electronics: DAE4 Sn916; Calibrated: 2019/12/17
- Phantom: SAM_Right; Type: QD000P40CD; Serial: TP:1683
- Measurement SW: DASY52, Version 52.10 (4);SEMCAD X Version 14.6.14 (7483)

Pin=250mW/Area Scan (71x71x1): Interpolated grid: dx=1.200 mm, dy=1.200 mm
Maximum value of SAR (interpolated) = 17.3 W/kg

Pin=250mW/Zoom Scan (7x7x7)/Cube 0: Measurement grid: dx=5mm, dy=5mm, dz=5mm
Reference Value = 94.81 V/m; Power Drift = -0.12 dB
Peak SAR (extrapolated) = 21.0 W/kg
SAR(1 g) = 12.3 W/kg; SAR(10 g) = 6.05 W/kg
Maximum value of SAR (measured) = 15.9 W/kg

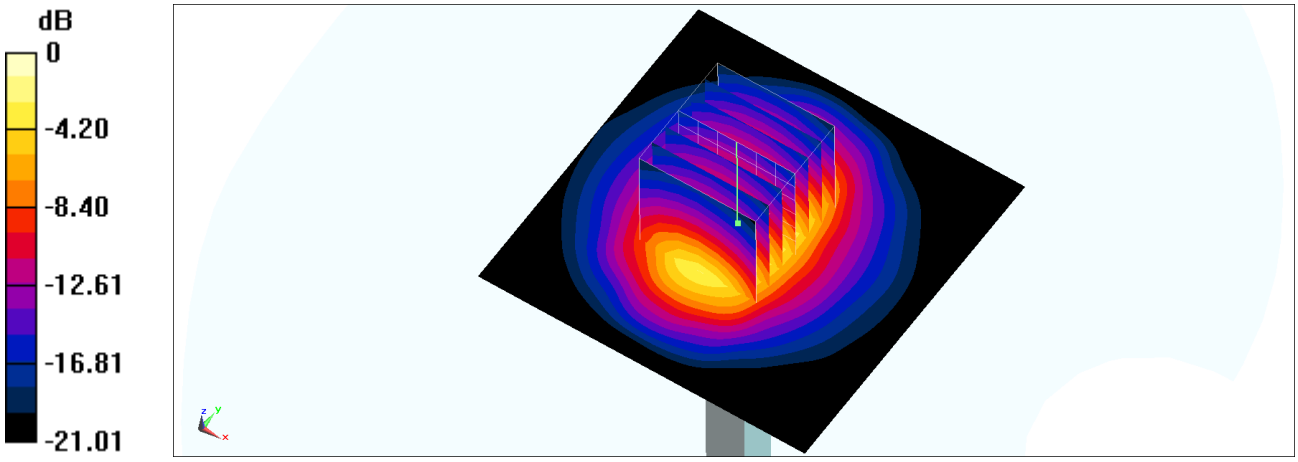

0 dB = 15.9 W/kg = 12.01 dBW/kg

System Check_Head_2600MHz

DUT: D2600V2-1078

Communication System: CW; Frequency: 2600 MHz;Duty Cycle: 1:1
Medium: HSL_2600_200602 Medium parameters used: f = 2600 MHz; σ = 2.013 S/m; ε_r = 37.944; ρ = 1000 kg/m^3
Ambient Temperature：23.5 ℃; Liquid Temperature：22.5 ℃

DASY5 Configuration:
- Probe: ES3DV3 - SN3184; ConvF(4.49, 4.49, 4.49) @ 2600 MHz; Calibrated: 2019/9/25
- Sensor-Surface: 3mm (Mechanical Surface Detection)
- Electronics: DAE4 Sn916; Calibrated: 2019/12/17
- Phantom: SAM_Right; Type: QD000P40CD; Serial: TP:1683
- Measurement SW: DASY52, Version 52.10 (4);SEMCAD X Version 14.6.14 (7483)

Pin=250mW/Area Scan (71x71x1): Interpolated grid: dx=1.200 mm, dy=1.200 mm
Maximum value of SAR (interpolated) = 20.3 W/kg

Pin=250mW/Zoom Scan (7x7x7)/Cube 0: Measurement grid: dx=5mm, dy=5mm, dz=5mm
Reference Value = 99.33 V/m; Power Drift = -0.04 dB
Peak SAR (extrapolated) = 30.7 W/kg
SAR(1 g) = 14.4 W/kg; SAR(10 g) = 6.42 W/kg
Maximum value of SAR (measured) = 19.5 W/kg

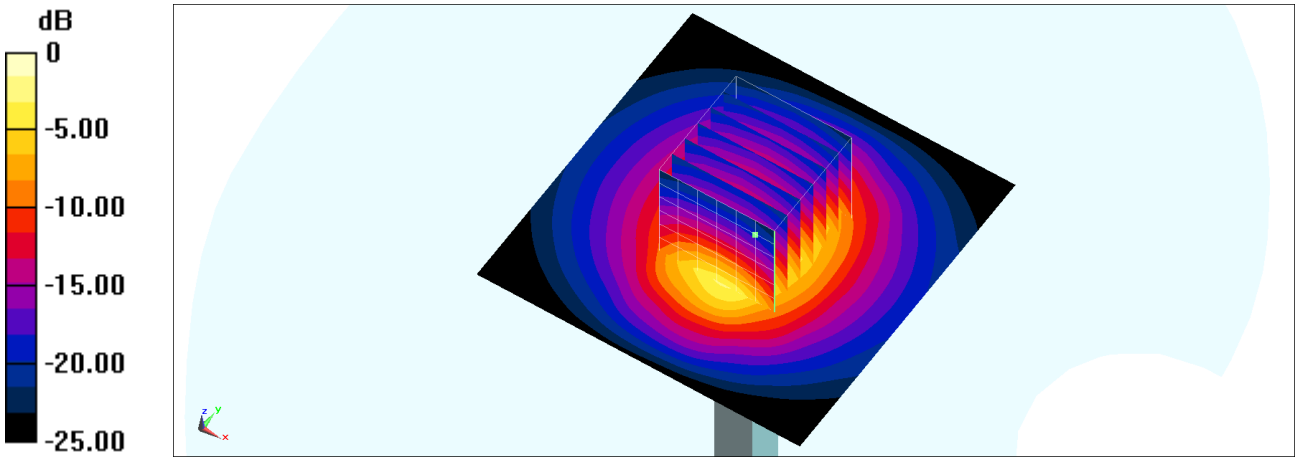

0 dB = 19.5 W/kg = 12.90 dBW/kg

System Check_Head_2600MHz

DUT: D2600V2-1078

Communication System: CW; Frequency: 2600 MHz;Duty Cycle: 1:1
Medium: HSL_2600_200608 Medium parameters used: f = 2600 MHz; σ = 2.03 S/m; ε_r = 38.694; ρ = 1000 kg/m^3
Ambient Temperature：23.6 ℃; Liquid Temperature：22.6 ℃

DASY5 Configuration:
- Probe: ES3DV3 - SN3184; ConvF(4.49, 4.49, 4.49) @ 2600 MHz; Calibrated: 2019/9/25
- Sensor-Surface: 3mm (Mechanical Surface Detection)
- Electronics: DAE4 Sn916; Calibrated: 2019/12/17
- Phantom: SAM_Right; Type: QD000P40CD; Serial: TP:1683
- Measurement SW: DASY52, Version 52.10 (4);SEMCAD X Version 14.6.14 (7483)

Pin=250mW/Area Scan (71x71x1): Interpolated grid: dx=1.200 mm, dy=1.200 mm
Maximum value of SAR (interpolated) = 20.0 W/kg

Pin=250mW/Zoom Scan (7x7x7)/Cube 0: Measurement grid: dx=5mm, dy=5mm, dz=5mm
Reference Value = 95.46 V/m; Power Drift = -0.09 dB
Peak SAR (extrapolated) = 24.7 W/kg
SAR(1 g) = 14.1 W/kg; SAR(10 g) = 6.64 W/kg
Maximum value of SAR (measured) = 18.4 W/kg

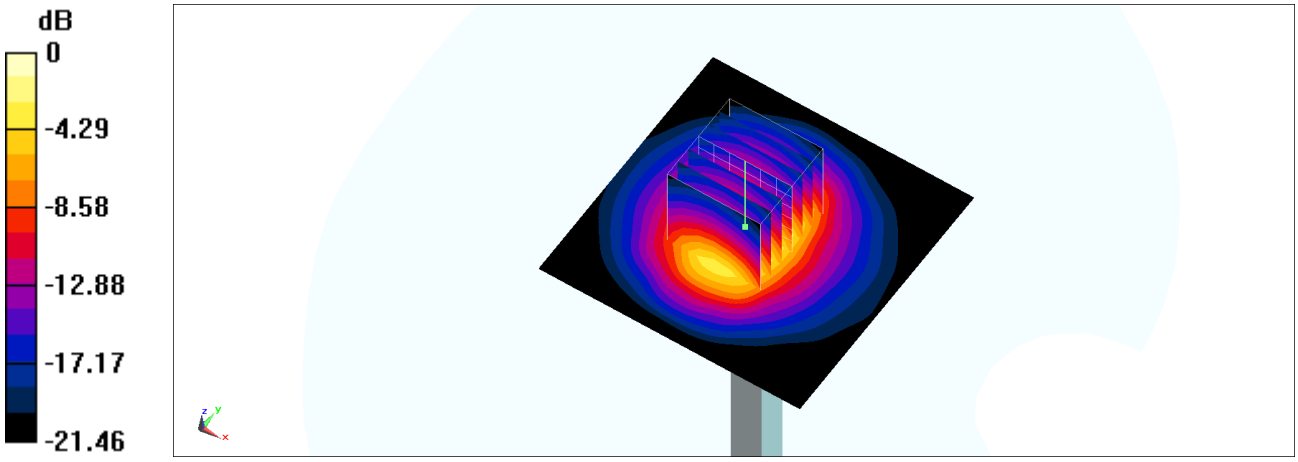

0 dB = 18.4 W/kg = 12.65 dBW/kg

System Check_Head_2600MHz

DUT: D2600V2-1078

Communication System: CW; Frequency: 2600 MHz;Duty Cycle: 1:1
Medium: HSL_2600_200620 Medium parameters used: f = 2600 MHz; σ = 2.01 S/m; ε_r = 37.814; ρ = 1000 kg/m^3
Ambient Temperature：23.8 ℃; Liquid Temperature：22.8 ℃

DASY5 Configuration:
- Probe: EX3DV4 - SN3925; ConvF(7.5, 7.5, 7.5) @ 2600 MHz; Calibrated: 2019/9/20
- Sensor-Surface: 1.4mm (Mechanical Surface Detection)
- Electronics: DAE4 Sn376; Calibrated: 2019/12/6
- Phantom: SAM_Left; Type: QD000P40CD; Serial: TP:1682
- Measurement SW: DASY52, Version 52.10 (4);SEMCAD X Version 14.6.14 (7483)

Pin=250mW/Area Scan (71x71x1): Interpolated grid: dx=1.200 mm, dy=1.200 mm
Maximum value of SAR (interpolated) = 26.2 W/kg

Pin=250mW/Zoom Scan (7x7x7)/Cube 0: Measurement grid: dx=5mm, dy=5mm, dz=5mm
Reference Value = 115.4 V/m; Power Drift = 0.03 dB
Peak SAR (extrapolated) = 32.4 W/kg
SAR(1 g) = 15 W/kg; SAR(10 g) = 6.69 W/kg
Maximum value of SAR (measured) = 25.8 W/kg

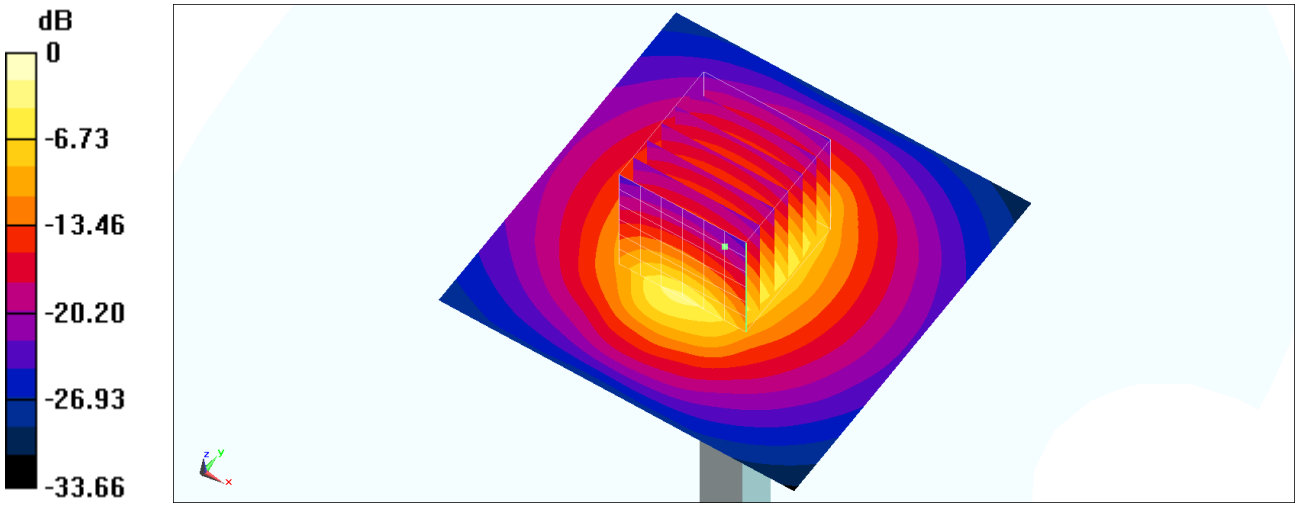

0 dB = 25.8 W/kg = 14.12 dBW/kg

System Check_Head_2600MHz

DUT: D2600V2-1078

Communication System: CW; Frequency: 2600 MHz;Duty Cycle: 1:1
Medium: HSL_2600_200622 Medium parameters used: f = 2600 MHz; σ = 2.012 S/m; ε_r = 39.188; ρ = 1000 kg/m^3
Ambient Temperature：23.5 ℃; Liquid Temperature：22.5 ℃

DASY5 Configuration:
- Probe: EX3DV4 - SN3925; ConvF(7.5, 7.5, 7.5) @ 2600 MHz; Calibrated: 2019/9/20
- Sensor-Surface: 1.4mm (Mechanical Surface Detection)
- Electronics: DAE4 Sn376; Calibrated: 2019/12/6
- Phantom: SAM_Left; Type: QD000P40CD; Serial: TP:1682
- Measurement SW: DASY52, Version 52.10 (4);SEMCAD X Version 14.6.14 (7483)

Pin=250mW/Area Scan (71x71x1): Interpolated grid: dx=1.200 mm, dy=1.200 mm
Maximum value of SAR (interpolated) = 26.3 W/kg

Pin=250mW/Zoom Scan (7x7x7)/Cube 0: Measurement grid: dx=5mm, dy=5mm, dz=5mm
Reference Value = 115.4 V/m; Power Drift = 0.18 dB
Peak SAR (extrapolated) = 32.4 W/kg
SAR(1 g) = 15 W/kg; SAR(10 g) = 6.7 W/kg
Maximum value of SAR (measured) = 25.9 W/kg

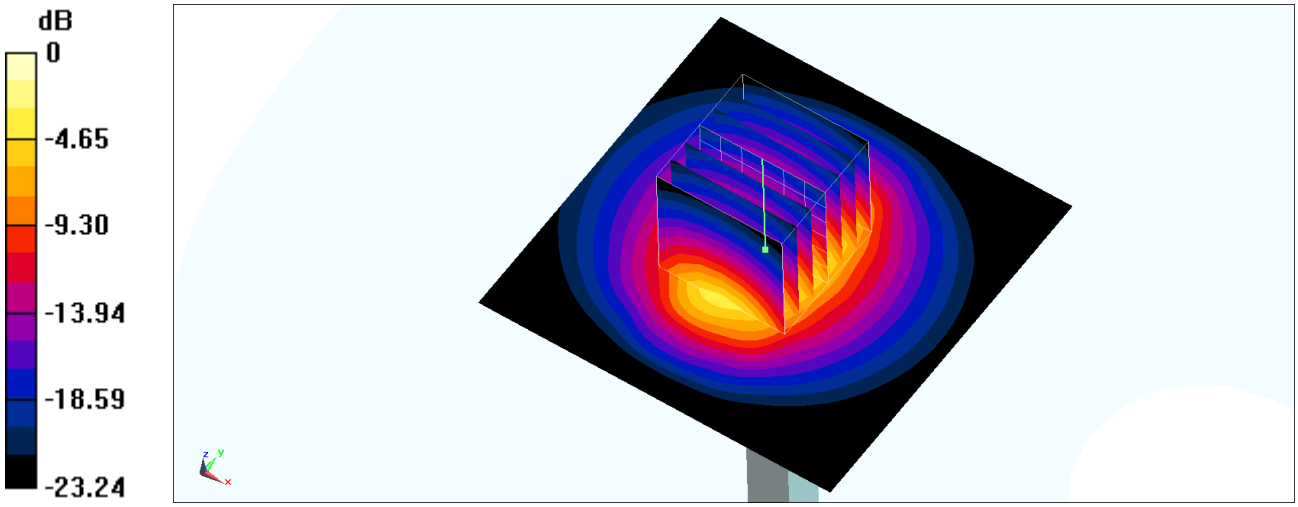

0 dB = 25.9 W/kg = 14.13 dBW/kg

System Check_Head_3500MHz

DUT: D3500V2-1014

Communication System: CW; Frequency: 3500 MHz;Duty Cycle: 1:1
Medium: HSL_3500_200601 Medium parameters used: f = 3500 MHz; σ = 2.97 S/m; ε_r = 38.043; ρ = 1000 kg/m^3
Ambient Temperature：23.4 ℃; Liquid Temperature：22.4 ℃

DASY5 Configuration:
- Probe: EX3DV4 - SN3925; ConvF(7.19, 7.19, 7.19) @ 3500 MHz; Calibrated: 2019/9/20
- Sensor-Surface: 1.4mm (Mechanical Surface Detection)
- Electronics: DAE4 Sn376; Calibrated: 2019/12/6
- Phantom: SAM_Right; Type: SAM; Serial: TP:1681
- Measurement SW: DASY52, Version 52.10 (4);SEMCAD X Version 14.6.14 (7483)

Pin=100mW/Area Scan (61x61x1): Interpolated grid: dx=1.200 mm, dy=1.200 mm
Maximum value of SAR (interpolated) = 13.0 W/kg

Pin=100mW/Zoom Scan (7x7x7)/Cube 0: Measurement grid: dx=5mm, dy=5mm, dz=1.4mm
Reference Value = 68.11 V/m; Power Drift = 0.07 dB
Peak SAR (extrapolated) = 17.4 W/kg
SAR(1 g) = 6.56 W/kg; SAR(10 g) = 2.45 W/kg
Maximum value of SAR (measured) = 13.0 W/kg

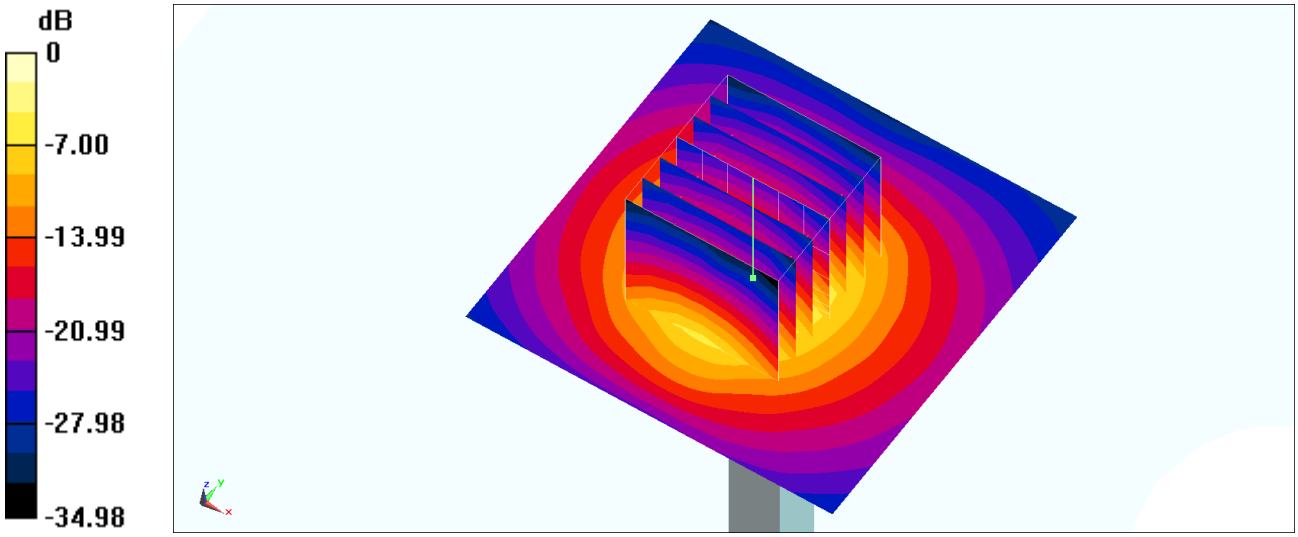

0 dB = 13.0 W/kg = 11.14 dBW/kg

System Check_Head_3500MHz

DUT: D3500V2-1014

Communication System: CW; Frequency: 3500 MHz;Duty Cycle: 1:1
Medium: HSL_3500_200701 Medium parameters used: f = 3500 MHz; σ = 3.043 S/m; ε_r = 39.267; ρ = 1000 kg/m^3
Ambient Temperature：23.3 ℃; Liquid Temperature：22.3 ℃

DASY5 Configuration:
- Probe: EX3DV4 - SN3925; ConvF(7.19, 7.19, 7.19) @ 3500 MHz; Calibrated: 2019/9/20
- Sensor-Surface: 1.4mm (Mechanical Surface Detection)
- Electronics: DAE4 Sn376; Calibrated: 2019/12/6
- Phantom: SAM_Right; Type: SAM; Serial: TP:1681
- Measurement SW: DASY52, Version 52.10 (4);SEMCAD X Version 14.6.14 (7483)

Pin=100mW/Area Scan (61x61x1): Interpolated grid: dx=1.200 mm, dy=1.200 mm
Maximum value of SAR (interpolated) = 13.4 W/kg

Pin=100mW/Zoom Scan (7x7x7)/Cube 0: Measurement grid: dx=5mm, dy=5mm, dz=1.4mm
Reference Value = 68.11 V/m; Power Drift = 0.07 dB
Peak SAR (extrapolated) = 17.9 W/kg
SAR(1 g) = 6.72 W/kg; SAR(10 g) = 2.51 W/kg
Maximum value of SAR (measured) = 13.3 W/kg

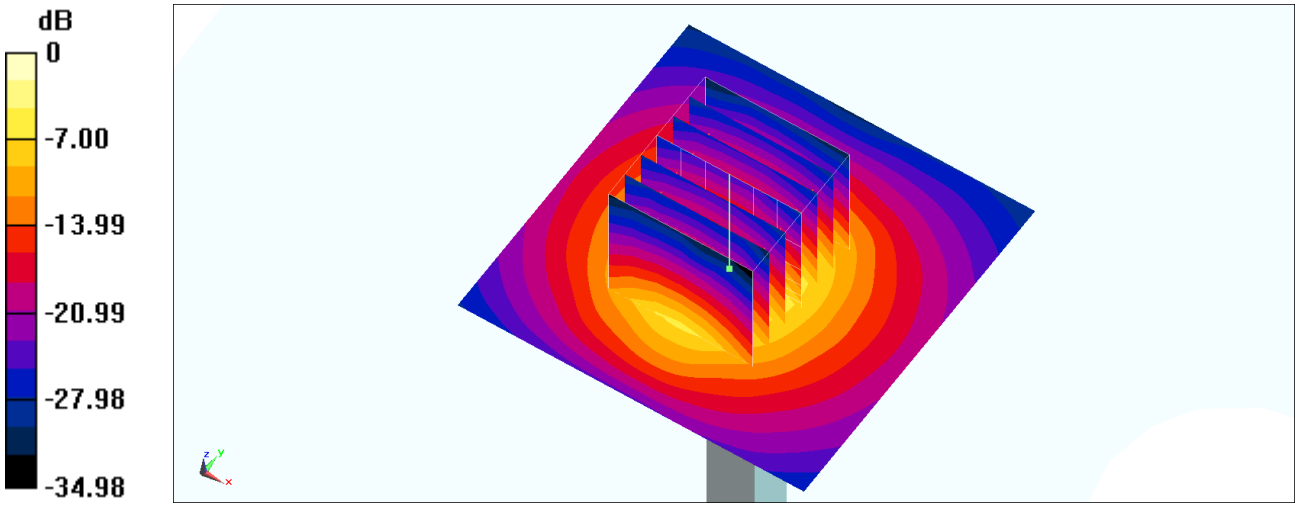

0 dB = 13.3 W/kg = 11.24 dBW/kg

System Check_Head_3700MHz

DUT: D3700V2-1006

Communication System: CW; Frequency: 3700 MHz;Duty Cycle: 1:1
Medium: HSL_3700_200601 Medium parameters used: f = 3700 MHz; σ = 3.182 S/m; ε_r = 37.841; ρ = 1000 kg/m^3
Ambient Temperature：23.4 ℃; Liquid Temperature：22.4 ℃

DASY5 Configuration:
- Probe: EX3DV4 - SN3925; ConvF(6.91, 6.91, 6.91) @ 3700 MHz; Calibrated: 2019/9/20
- Sensor-Surface: 1.4mm (Mechanical Surface Detection)
- Electronics: DAE4 Sn376; Calibrated: 2019/12/6
- Phantom: SAM_Right; Type: SAM; Serial: TP:1681
- Measurement SW: DASY52, Version 52.10 (4);SEMCAD X Version 14.6.14 (7483)

Pin=100mW/Area Scan (61x61x1): Interpolated grid: dx=1.200 mm, dy=1.200 mm
Maximum value of SAR (interpolated) = 14.2 W/kg

Pin=100mW/Zoom Scan (7x7x7)/Cube 0: Measurement grid: dx=5mm, dy=5mm, dz=1.4mm
Reference Value = 68.03 V/m; Power Drift = 0.07 dB
Peak SAR (extrapolated) = 19.3 W/kg
SAR(1 g) = 6.94 W/kg; SAR(10 g) = 2.5 W/kg
Maximum value of SAR (measured) = 14.2 W/kg

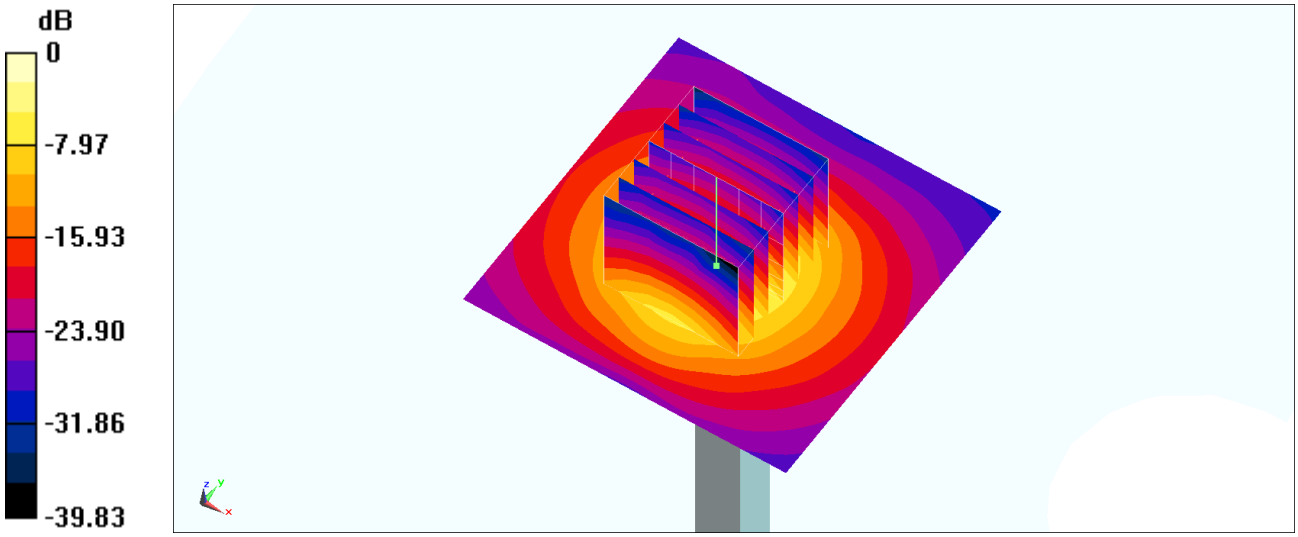

0 dB = 14.2 W/kg = 11.52 dBW/kg

System Check_Head_3700MHz

DUT: D3700V2-1006

Communication System: CW; Frequency: 3700 MHz;Duty Cycle: 1:1
Medium: HSL_3700_200701 Medium parameters used: f = 3700 MHz; σ = 3.198 S/m; ε_r = 38.997; ρ = 1000 kg/m^3
Ambient Temperature：23.3 ℃; Liquid Temperature：22.3 ℃

DASY5 Configuration:
- Probe: EX3DV4 - SN3925; ConvF(6.91, 6.91, 6.91) @ 3700 MHz; Calibrated: 2019/9/20
- Sensor-Surface: 1.4mm (Mechanical Surface Detection)
- Electronics: DAE4 Sn376; Calibrated: 2019/12/6
- Phantom: SAM_Right; Type: SAM; Serial: TP:1681
- Measurement SW: DASY52, Version 52.10 (4);SEMCAD X Version 14.6.14 (7483)

Pin=100mW/Area Scan (61x61x1): Interpolated grid: dx=1.200 mm, dy=1.200 mm
Maximum value of SAR (interpolated) = 14.3 W/kg

Pin=100mW/Zoom Scan (7x7x7)/Cube 0: Measurement grid: dx=5mm, dy=5mm, dz=1.4mm
Reference Value = 68.03 V/m; Power Drift = 0.07 dB
Peak SAR (extrapolated) = 19.4 W/kg
SAR(1 g) = 6.98 W/kg; SAR(10 g) = 2.51 W/kg
Maximum value of SAR (measured) = 14.2 W/kg

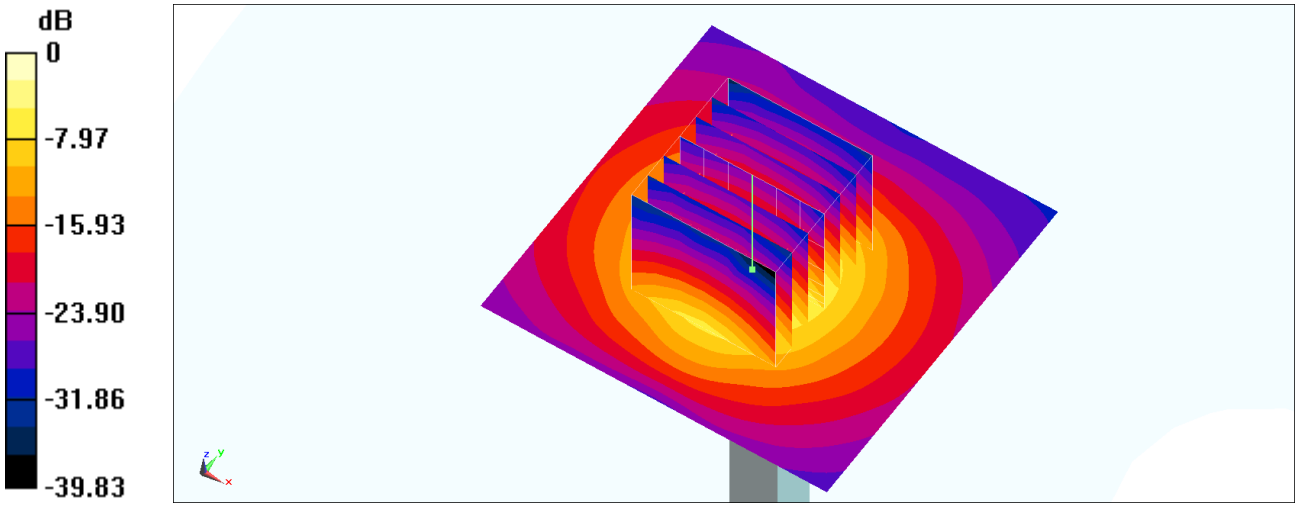

0 dB = 14.2 W/kg = 11.52 dBW/kg

System Check_Head_5250MHz

DUT: D5GHzV2-1128

Communication System: CW; Frequency: 5250 MHz;Duty Cycle: 1:1
Medium: HSL_5G_200529 Medium parameters used : f = 5250 MHz; σ = 4.683 S/m; ε_r = 36.786; ρ = 1000 kg/m^3
Ambient Temperature：23.3 ℃; Liquid Temperature：22.3 ℃

DASY5 Configuration:
- Probe: EX3DV4 - SN7515; ConvF(5.38, 5.38, 5.38) @ 5250 MHz; Calibrated: 2019/10/22
- Sensor-Surface: 1.4mm (Mechanical Surface Detection)
- Electronics: DAE4 Sn853; Calibrated: 2019/7/18
- Phantom: SAM_Left; Type: QD000P40CD; Serial: TP:1477
- Measurement SW: DASY52, Version 52.10 (4);SEMCAD X Version 14.6.14 (7483)

Pin=100mW/Area Scan (71x71x1): Interpolated grid: dx=1.000 mm, dy=1.000 mm
Maximum value of SAR (interpolated) = 18.1 W/kg

Pin=100mW/Zoom Scan (7x7x7)/Cube 0: Measurement grid: dx=4mm, dy=4mm, dz=1.4mm
Reference Value = 70.52 V/m; Power Drift = 0.09 dB
Peak SAR (extrapolated) = 29.9 W/kg
SAR(1 g) = 7.54 W/kg; SAR(10 g) = 2.11 W/kg
Maximum value of SAR (measured) = 18.5 W/kg

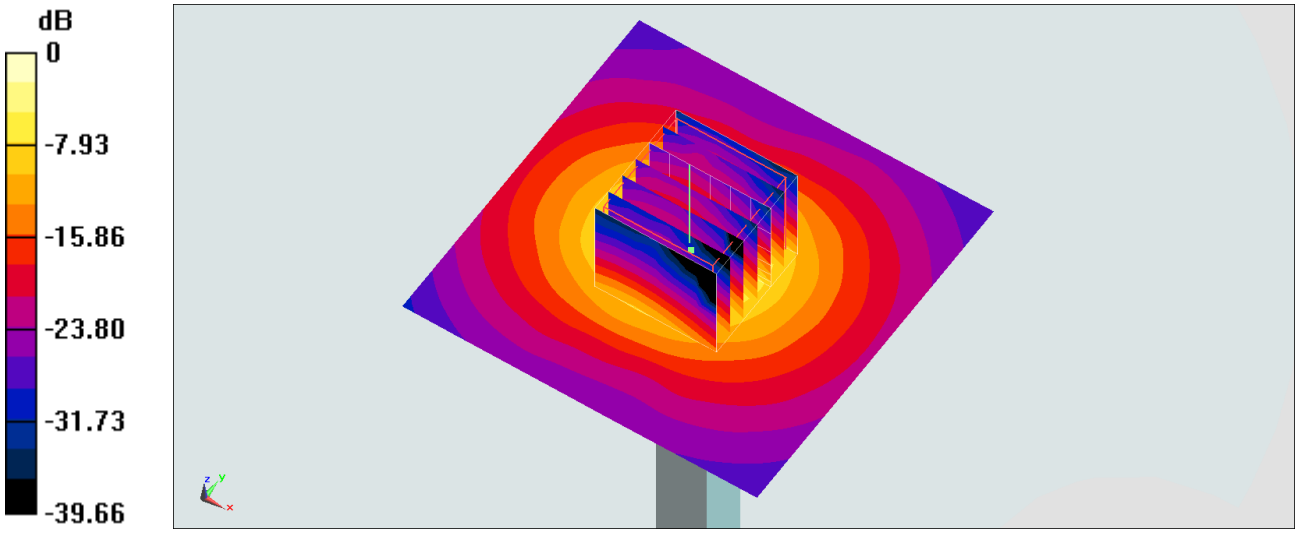

0 dB = 18.5 W/kg = 12.67 dBW/kg

System Check_Head_5250MHz

DUT: D5GHzV2-1128

Communication System: CW; Frequency: 5250 MHz;Duty Cycle: 1:1
Medium: HSL_5G_200530 Medium parameters used: f = 5250 MHz; σ = 4.588 S/m; ε_r = 36.996; ρ = 1000 kg/m^3
Ambient Temperature：23.7 ℃; Liquid Temperature：22.7 ℃

DASY5 Configuration:
- Probe: EX3DV4 - SN7515; ConvF(5.38, 5.38, 5.38) @ 5250 MHz; Calibrated: 2019/10/22
- Sensor-Surface: 1.4mm (Mechanical Surface Detection)
- Electronics: DAE4 Sn853; Calibrated: 2019/7/18
- Phantom: SAM_Right; Type: SAM; Serial: TP:1681
- Measurement SW: DASY52, Version 52.10 (4);SEMCAD X Version 14.6.14 (7483)

Pin=100mW/Area Scan (71x71x1): Interpolated grid: dx=1.000 mm, dy=1.000 mm
Maximum value of SAR (interpolated) = 17.7 W/kg

Pin=100mW/Zoom Scan (7x7x7)/Cube 0: Measurement grid: dx=4mm, dy=4mm, dz=1.4mm
Reference Value = 69.33 V/m; Power Drift = 0.01 dB
Peak SAR (extrapolated) = 30.2 W/kg
SAR(1 g) = 7.63 W/kg; SAR(10 g) = 2.13 W/kg
Maximum value of SAR (measured) = 18.7 W/kg

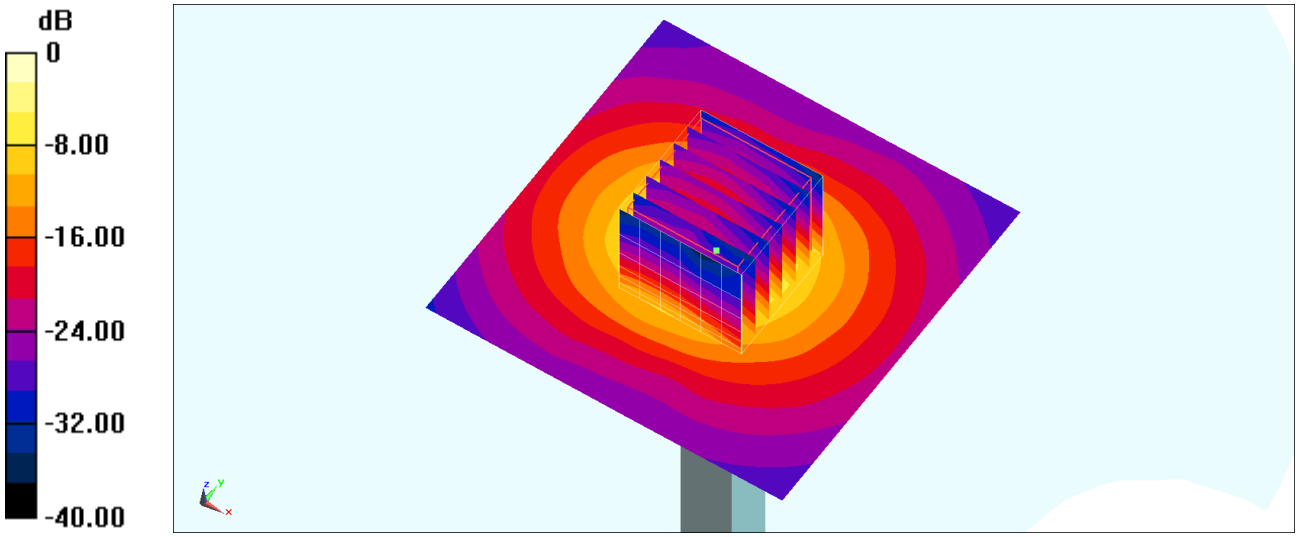

0 dB = 18.7 W/kg = 12.72 dBW/kg

System Check_Head_5250MHz

DUT: D5GHzV2-1128

Communication System: CW; Frequency: 5250 MHz;Duty Cycle: 1:1
Medium: HSL_5G_200602 Medium parameters used: f = 5250 MHz; σ = 4.502 S/m; ε_r = 35.561; ρ = 1000 kg/m^3
Ambient Temperature：23.3 ℃; Liquid Temperature：22.3 ℃

DASY5 Configuration:
- Probe: EX3DV4 - SN7515; ConvF(5.38, 5.38, 5.38) @ 5250 MHz; Calibrated: 2019/10/22
- Sensor-Surface: 1.4mm (Mechanical Surface Detection)
- Electronics: DAE4 Sn853; Calibrated: 2019/7/18
- Phantom: SAM_Left; Type: QD000P40CD; Serial: TP:1477
- Measurement SW: DASY52, Version 52.10 (4);SEMCAD X Version 14.6.14 (7483)

Pin=100mW/Area Scan (71x71x1): Interpolated grid: dx=1.000 mm, dy=1.000 mm
Maximum value of SAR (interpolated) = 17.4 W/kg

Pin=100mW/Zoom Scan (7x7x7)/Cube 0: Measurement grid: dx=4mm, dy=4mm, dz=1.4mm
Reference Value = 69.33 V/m; Power Drift = 0.02 dB
Peak SAR (extrapolated) = 29.6 W/kg
SAR(1 g) = 7.48 W/kg; SAR(10 g) = 2.09 W/kg
Maximum value of SAR (measured) = 18.3 W/kg

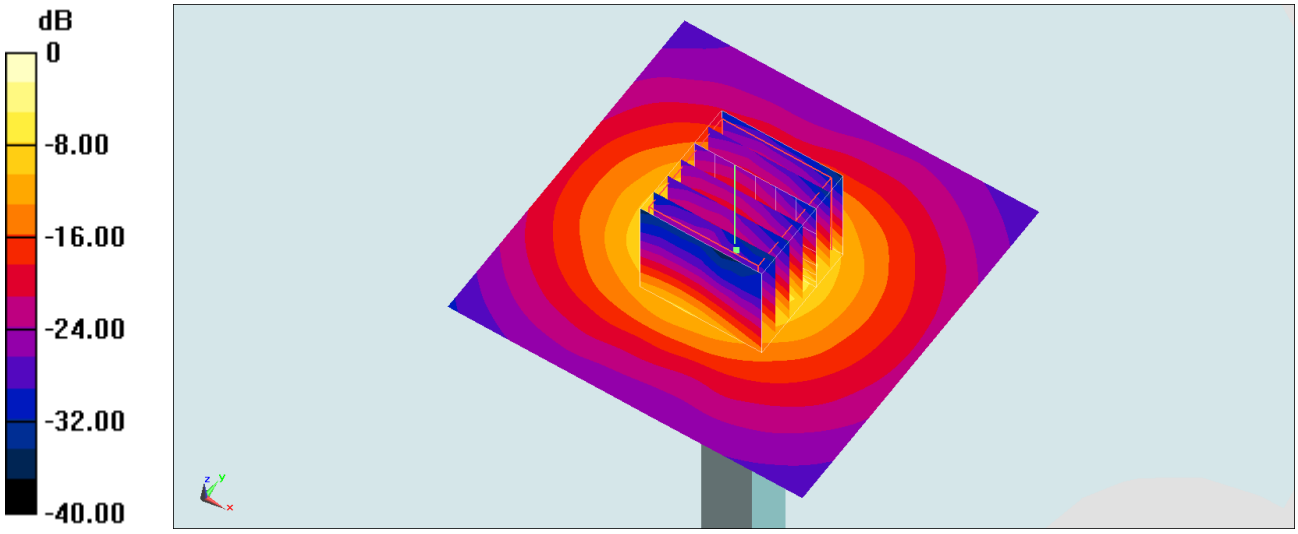

0 dB = 18.3 W/kg = 12.62 dBW/kg

System Check_Head_5250MHz

DUT: D5GHzV2-1006

Communication System: CW; Frequency: 5250 MHz;Duty Cycle: 1:1
Medium: HSL_5G_200613 Medium parameters used : f = 5250 MHz; σ = 4.599 S/m; ε_r = 36.972; ρ = 1000 kg/m^3
Ambient Temperature：23.9 ℃; Liquid Temperature：22.9 ℃

DASY5 Configuration:
- Probe: EX3DV4 - SN3642; ConvF(4.43, 4.43, 4.43) @ 5250 MHz; Calibrated: 2020/4/29
- Sensor-Surface: 1.4mm (Mechanical Surface Detection)
- Electronics: DAE4 Sn376; Calibrated: 2019/12/6
- Phantom: SAM_Right; Type: SAM; Serial: TP:1681
- Measurement SW: DASY52, Version 52.10 (4);SEMCAD X Version 14.6.14 (7483)

Pin=100mW/Area Scan (71x71x1): Interpolated grid: dx=1.000 mm, dy=1.000 mm
Maximum value of SAR (interpolated) = 22.0 W/kg

Pin=100mW/Zoom Scan (7x7x7)/Cube 0: Measurement grid: dx=4mm, dy=4mm, dz=1.4mm
Reference Value = 75.79 V/m; Power Drift = -0.07 dB
Peak SAR (extrapolated) = 36.1 W/kg
SAR(1 g) = 8.66 W/kg; SAR(10 g) = 2.34 W/kg
Maximum value of SAR (measured) = 22.1 W/kg

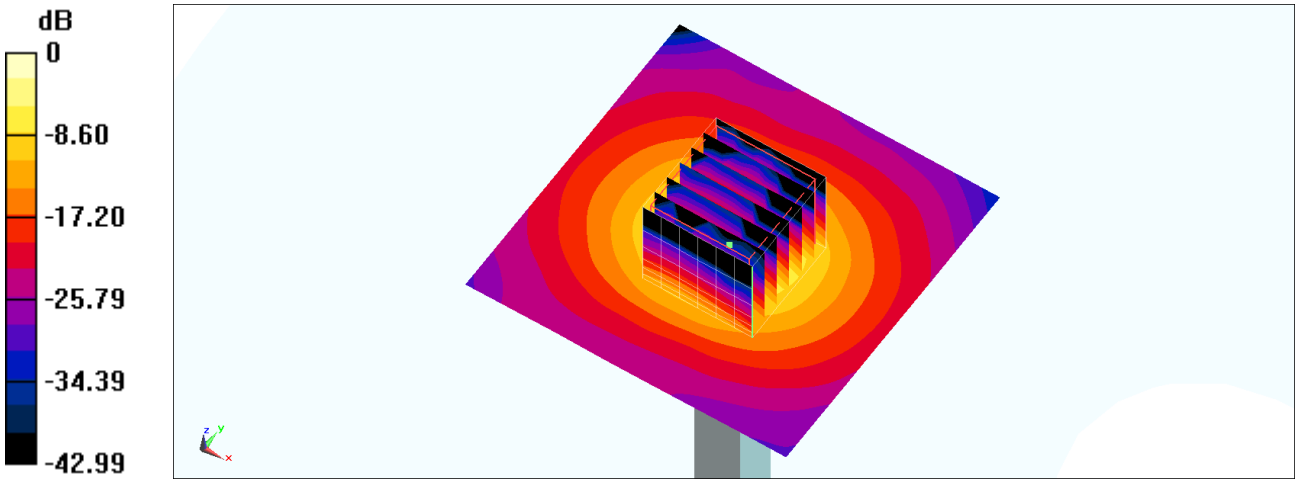

0 dB = 22.1 W/kg = 13.44 dBW/kg

System Check_Head_5600MHz

DUT: D5GHzV2-1128

Communication System: CW; Frequency: 5600 MHz;Duty Cycle: 1:1
Medium: HSL_5G_200529 Medium parameters used: f = 5600 MHz; σ = 5.046 S/m; ε_r = 36.304; ρ = 1000 kg/m^3
Ambient Temperature：23.3 ℃; Liquid Temperature：22.3 ℃

DASY5 Configuration:
- Probe: EX3DV4 - SN7515; ConvF(4.77, 4.77, 4.77) @ 5600 MHz; Calibrated: 2019/10/22
- Sensor-Surface: 1.4mm (Mechanical Surface Detection)
- Electronics: DAE4 Sn853; Calibrated: 2019/7/18
- Phantom: SAM_Left; Type: QD000P40CD; Serial: TP:1477
- Measurement SW: DASY52, Version 52.10 (4);SEMCAD X Version 14.6.14 (7483)

Pin=100mW/Area Scan (71x71x1): Interpolated grid: dx=1.000 mm, dy=1.000 mm
Maximum value of SAR (interpolated) = 21.2 W/kg

Pin=100mW/Zoom Scan (7x7x7)/Cube 0: Measurement grid: dx=4mm, dy=4mm, dz=1.4mm
Reference Value = 72.50 V/m; Power Drift = 0.05 dB
Peak SAR (extrapolated) = 37.4 W/kg
SAR(1 g) = 8.73 W/kg; SAR(10 g) = 2.42 W/kg
Maximum value of SAR (measured) = 22.0 W/kg

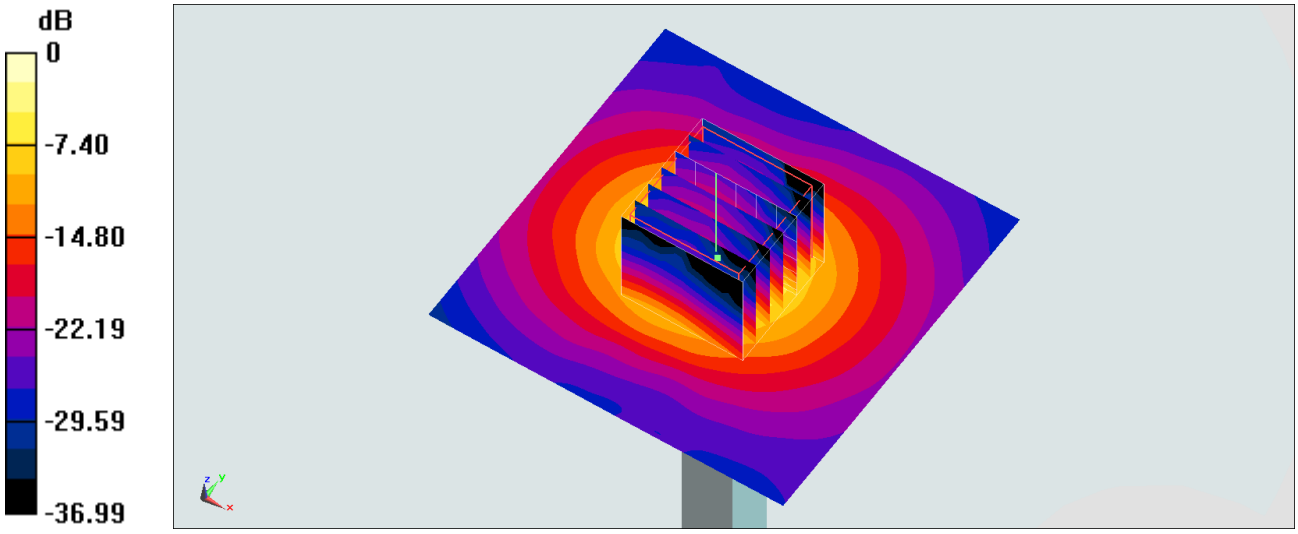

0 dB = 22.0 W/kg = 13.42 dBW/kg

System Check_Head_5600MHz

DUT: D5GHzV2-1128

Communication System: CW; Frequency: 5600 MHz;Duty Cycle: 1:1
Medium: HSL_5G_200530 Medium parameters used: f = 5600 MHz; σ = 4.943 S/m; ε_r = 36.468; ρ = 1000 kg/m^3
Ambient Temperature：23.7 ℃; Liquid Temperature：22.7 ℃

DASY5 Configuration:
- Probe: EX3DV4 - SN7515; ConvF(4.77, 4.77, 4.77) @ 5600 MHz; Calibrated: 2019/10/22
- Sensor-Surface: 1.4mm (Mechanical Surface Detection)
- Electronics: DAE4 Sn853; Calibrated: 2019/7/18
- Phantom: SAM_Right; Type: SAM; Serial: TP:1681
- Measurement SW: DASY52, Version 52.10 (4);SEMCAD X Version 14.6.14 (7483)

Pin=100mW/Area Scan (71x71x1): Interpolated grid: dx=1.000 mm, dy=1.000 mm
Maximum value of SAR (interpolated) = 20.8 W/kg

Pin=100mW/Zoom Scan (7x7x7)/Cube 0: Measurement grid: dx=4mm, dy=4mm, dz=1.4mm
Reference Value = 72.50 V/m; Power Drift = 0.05 dB
Peak SAR (extrapolated) = 36.6 W/kg
SAR(1 g) = 8.55 W/kg; SAR(10 g) = 2.37 W/kg
Maximum value of SAR (measured) = 21.6 W/kg

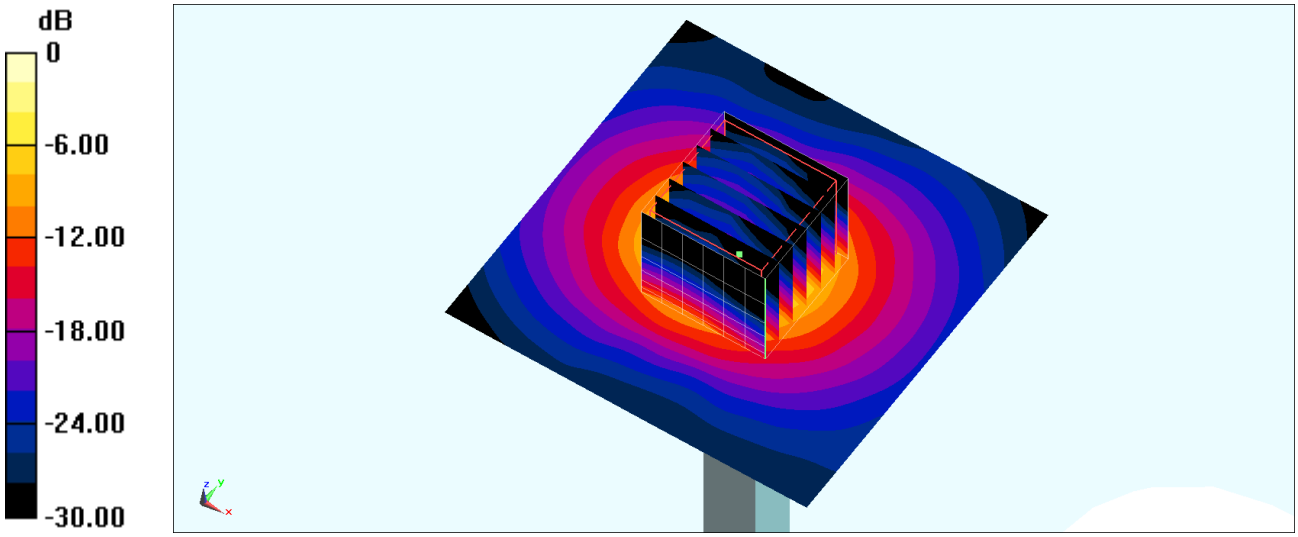

0 dB = 21.6 W/kg = 13.34 dBW/kg

System Check_Head_5600MHz

DUT: D5GHzV2-1128

Communication System: CW; Frequency: 5600 MHz;Duty Cycle: 1:1
Medium: HSL_5G_200604 Medium parameters used: f = 5600 MHz; σ = 5.101 S/m; ε_r = 36.196; ρ = 1000 kg/m^3
Ambient Temperature：23.3 ℃; Liquid Temperature：22.3 ℃

DASY5 Configuration:
- Probe: EX3DV4 - SN7515; ConvF(4.77, 4.77, 4.77) @ 5600 MHz; Calibrated: 2019/10/22
- Sensor-Surface: 1.4mm (Mechanical Surface Detection)
- Electronics: DAE4 Sn853; Calibrated: 2019/7/18
- Phantom: SAM_Left; Type: QD000P40CD; Serial: TP:1477
- Measurement SW: DASY52, Version 52.10 (4);SEMCAD X Version 14.6.14 (7483)

Pin=100mW/Area Scan (71x71x1): Interpolated grid: dx=1.000 mm, dy=1.000 mm
Maximum value of SAR (interpolated) = 21.4 W/kg

Pin=100mW/Zoom Scan (7x7x7)/Cube 0: Measurement grid: dx=4mm, dy=4mm, dz=1.4mm
Reference Value = 72.50 V/m; Power Drift = 0.02 dB
Peak SAR (extrapolated) = 37.8 W/kg
SAR(1 g) = 8.83 W/kg; SAR(10 g) = 2.44 W/kg
Maximum value of SAR (measured) = 22.2 W/kg

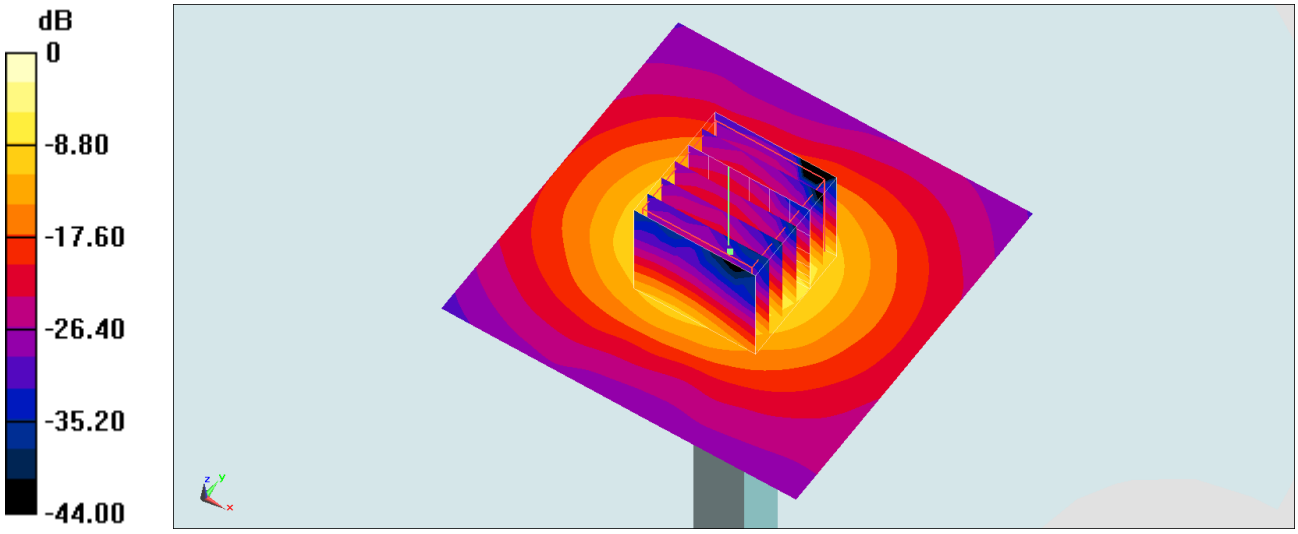

0 dB = 22.2 W/kg = 13.46 dBW/kg

System Check_Head_5600MHz

DUT: D5GHzV2-1006

Communication System: CW; Frequency: 5600 MHz;Duty Cycle: 1:1
Medium: HSL_5G_200605 Medium parameters used: f = 5600 MHz; σ = 5.063 S/m; ε_r = 36.888; ρ = 1000 kg/m^3
Ambient Temperature：23.5 ℃; Liquid Temperature：22.5 ℃

DASY5 Configuration:
- Probe: EX3DV4 - SN3925; ConvF(4.89, 4.89, 4.89) @ 5600 MHz; Calibrated: 2019/9/20
- Sensor-Surface: 1.4mm (Mechanical Surface Detection)
- Electronics: DAE4 Sn376; Calibrated: 2019/12/6
- Phantom: SAM_Right; Type: SAM; Serial: TP:1681
- Measurement SW: DASY52, Version 52.10 (4);SEMCAD X Version 14.6.14 (7483)

Pin=100mW/Area Scan (71x71x1): Interpolated grid: dx=1.000 mm, dy=1.000 mm
Maximum value of SAR (interpolated) = 21.2 W/kg

Pin=100mW/Zoom Scan (7x7x7)/Cube 0: Measurement grid: dx=4mm, dy=4mm, dz=1.4mm
Reference Value = 72.92 V/m; Power Drift = 0.01 dB
Peak SAR (extrapolated) = 37.9 W/kg
SAR(1 g) = 8.74 W/kg; SAR(10 g) = 2.49 W/kg
Maximum value of SAR (measured) = 22.8 W/kg

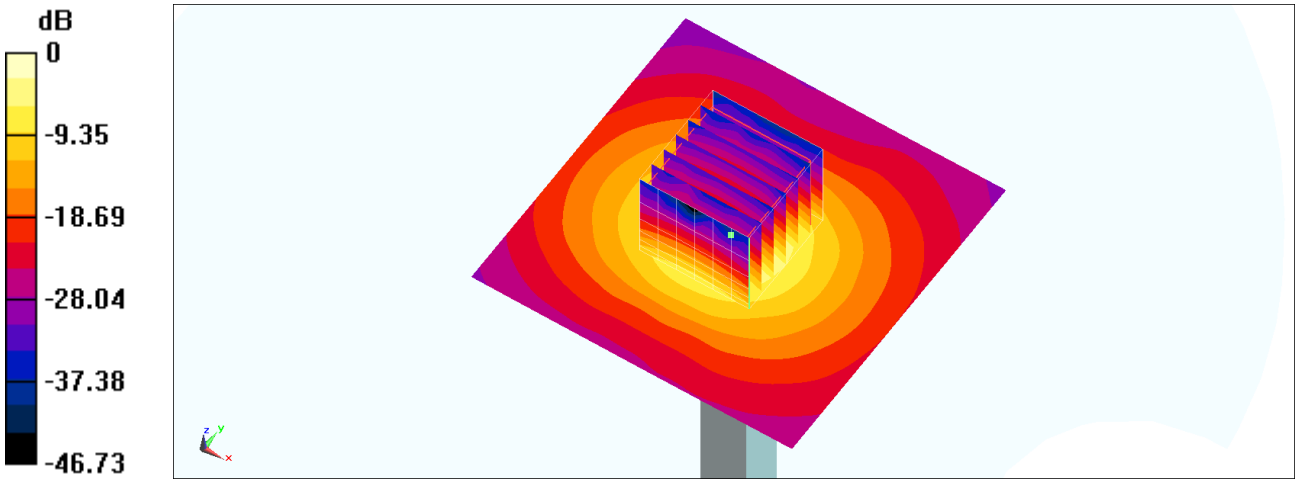

0 dB = 22.8 W/kg = 13.58 dBW/kg

System Check_Head_5600MHz

DUT: D5GHzV2-1006

Communication System: CW ; Frequency: 5600 MHz;Duty Cycle: 1:1
Medium: HSL_5G_200613 Medium parameters used: f = 5600 MHz; σ = 4.952 S/m; ε_r = 36.432; ρ = 1000 kg/m^3
Ambient Temperature：23.9 ℃; Liquid Temperature：22.9 ℃

DASY5 Configuration:
- Probe: EX3DV4 - SN3642; ConvF(4.19, 4.19, 4.19) @ 5600 MHz; Calibrated: 2020/4/29
- Sensor-Surface: 1.4mm (Mechanical Surface Detection)
- Electronics: DAE4 Sn376; Calibrated: 2019/12/6
- Phantom: SAM_Right; Type: SAM; Serial: TP:1681
- Measurement SW: DASY52, Version 52.10 (4);SEMCAD X Version 14.6.14 (7483)

Pin=100mW/Area Scan (71x71x1): Interpolated grid: dx=1.000 mm, dy=1.000 mm
Maximum value of SAR (interpolated) = 23.5 W/kg

Pin=100mW/Zoom Scan (7x7x7)/Cube 0: Measurement grid: dx=4mm, dy=4mm, dz=1.4mm
Reference Value = 74.75 V/m; Power Drift = -0.06 dB
Peak SAR (extrapolated) = 39.0 W/kg
SAR(1 g) = 8.74 W/kg; SAR(10 g) = 2.43 W/kg
Maximum value of SAR (measured) = 22.8 W/kg

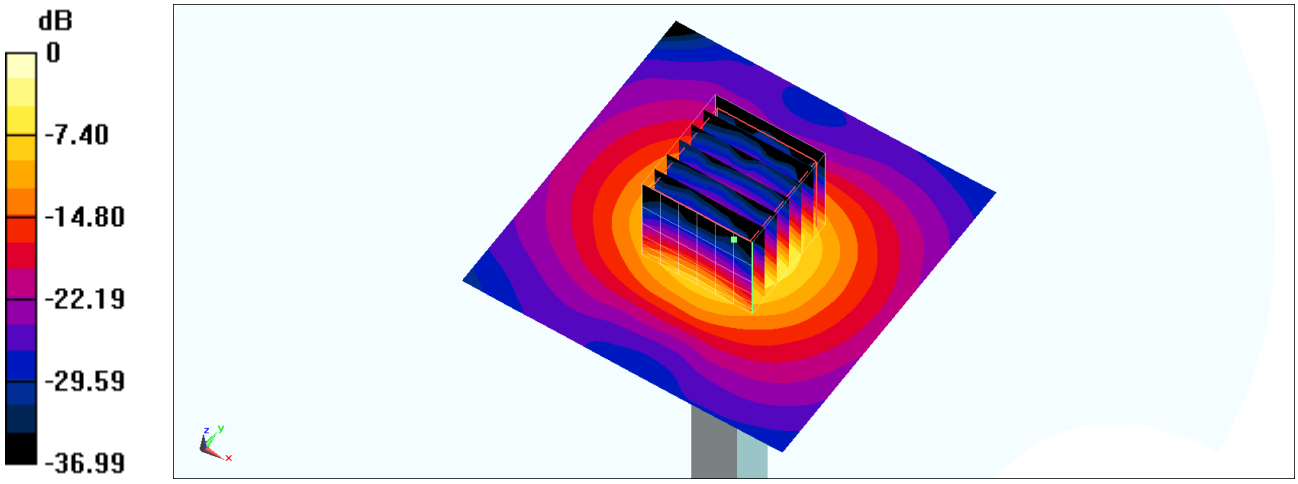

0 dB = 22.8 W/kg = 13.58 dBW/kg

System Check_Head_5750MHz

DUT: D5GHzV2-1128

Communication System: CW; Frequency: 5750 MHz;Duty Cycle: 1:1
Medium: HSL_5G_200530 Medium parameters used: f = 5750 MHz; σ = 5.101 S/m; ε_r = 36.334; ρ = 1000 kg/m^3
Ambient Temperature：23.7 ℃; Liquid Temperature：22.7 ℃

DASY5 Configuration:
- Probe: EX3DV4 - SN7515; ConvF(4.94, 4.94, 4.94) @ 5750 MHz; Calibrated: 2019/10/22
- Sensor-Surface: 1.4mm (Mechanical Surface Detection)
- Electronics: DAE4 Sn853; Calibrated: 2019/7/18
- Phantom: SAM_Right; Type: SAM; Serial: TP:1681
- Measurement SW: DASY52, Version 52.10 (4);SEMCAD X Version 14.6.14 (7483)

Pin=100mW/Area Scan (71x71x1): Interpolated grid: dx=1.000 mm, dy=1.000 mm
Maximum value of SAR (interpolated) = 19.5 W/kg

Pin=100mW/Zoom Scan (7x7x7)/Cube 0: Measurement grid: dx=4mm, dy=4mm, dz=1.4mm
Reference Value = 68.82 V/m; Power Drift = 0.07 dB
Peak SAR (extrapolated) = 35.4 W/kg
SAR(1 g) = 7.97 W/kg; SAR(10 g) = 2.21 W/kg
Maximum value of SAR (measured) = 20.3 W/kg

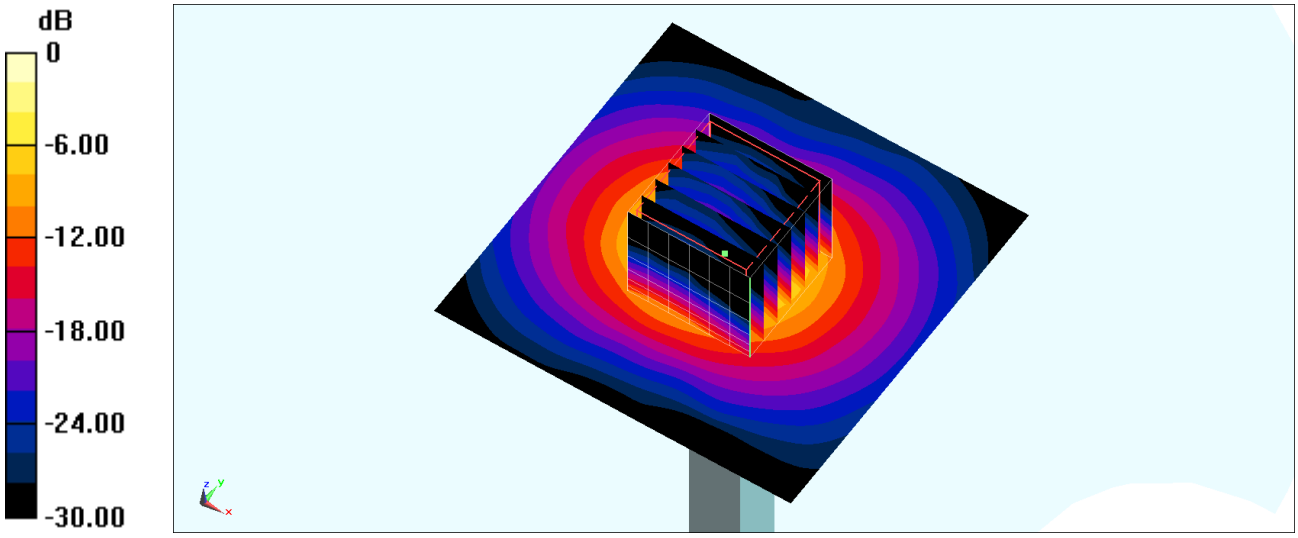

0 dB = 20.3 W/kg = 13.07 dBW/kg

System Check_Head_5750MHz

DUT: D5GHzV2-1128

Communication System: CW ; Frequency: 5750 MHz;Duty Cycle: 1:1
Medium: HSL_5G_200605 Medium parameters used: f = 5750 MHz; σ = 5.217 S/m; ε_r = 36.752; ρ = 1000 kg/m^3
Ambient Temperature：23.5 ℃; Liquid Temperature：22.5 ℃

DASY5 Configuration:
- Probe: EX3DV4 - SN3925; ConvF(5.22, 5.22, 5.22) @ 5750 MHz; Calibrated: 2019/9/20
- Sensor-Surface: 1.4mm (Mechanical Surface Detection)
- Electronics: DAE4 Sn376; Calibrated: 2019/12/6
- Phantom: SAM_Right; Type: SAM; Serial: TP:1681
- Measurement SW: DASY52, Version 52.10 (4);SEMCAD X Version 14.6.14 (7483)

Pin=100mW/Area Scan (71x71x1): Interpolated grid: dx=1.000 mm, dy=1.000 mm
Maximum value of SAR (interpolated) = 19.6 W/kg

Pin=100mW/Zoom Scan (7x7x7)/Cube 0: Measurement grid: dx=4mm, dy=4mm, dz=1.4mm
Reference Value = 67.89 V/m; Power Drift = -0.12 dB
Peak SAR (extrapolated) = 35.5 W/kg
SAR(1 g) = 7.89 W/kg; SAR(10 g) = 2.22 W/kg
Maximum value of SAR (measured) = 20.8 W/kg

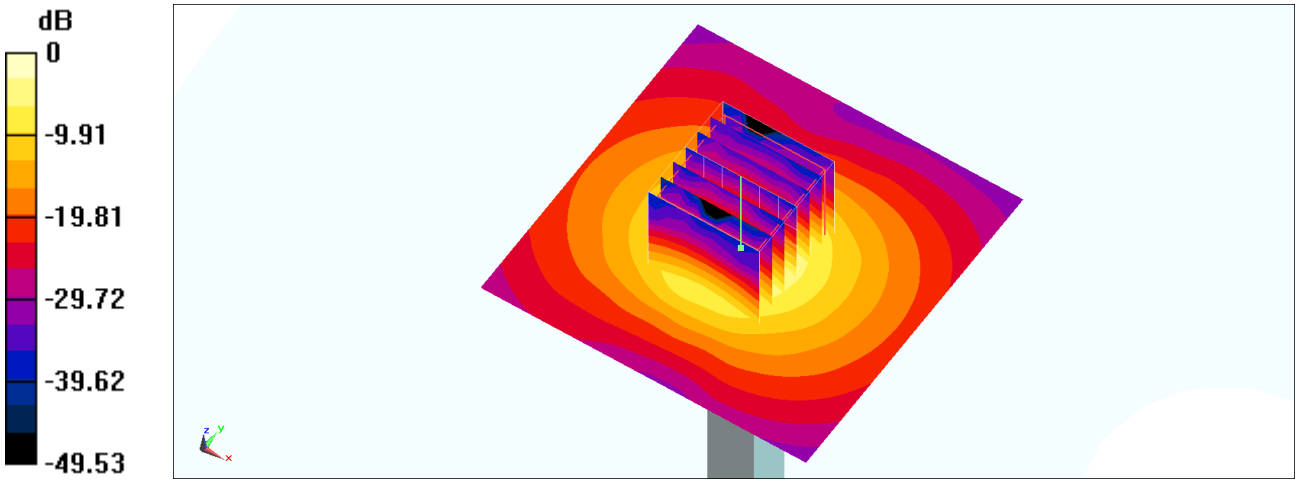

0 dB = 20.8 W/kg = 13.18 dBW/kg

System Check_Head_5750MHz

DUT: D5GHzV2-1006

Communication System: CW; Frequency: 5750 MHz;Duty Cycle: 1:1
Medium: HSL_5G_200612 Medium parameters used: f = 5750 MHz; σ = 5.132 S/m; ε_r = 36.417; ρ = 1000 kg/m^3
Ambient Temperature：23.6 ℃; Liquid Temperature：22.6 ℃

DASY5 Configuration:
- Probe: EX3DV4 - SN3642; ConvF(4.17, 4.17, 4.17) @ 5750 MHz; Calibrated: 2020/4/29
- Sensor-Surface: 1.4mm (Mechanical Surface Detection)
- Electronics: DAE4 Sn376; Calibrated: 2019/12/6
- Phantom: SAM_Right; Type: SAM; Serial: TP:1681
- Measurement SW: DASY52, Version 52.10 (4);SEMCAD X Version 14.6.14 (7483)

Pin=100mW/Area Scan (71x71x1): Interpolated grid: dx=1.000 mm, dy=1.000 mm
Maximum value of SAR (interpolated) = 22.1 W/kg

Pin=100mW/Zoom Scan (7x7x7)/Cube 0: Measurement grid: dx=4mm, dy=4mm, dz=1.4mm
Reference Value = 73.19 V/m; Power Drift = -0.15 dB
Peak SAR (extrapolated) = 40.3 W/kg
SAR(1 g) = 8.56 W/kg; SAR(10 g) = 2.38 W/kg
Maximum value of SAR (measured) = 23.1 W/kg

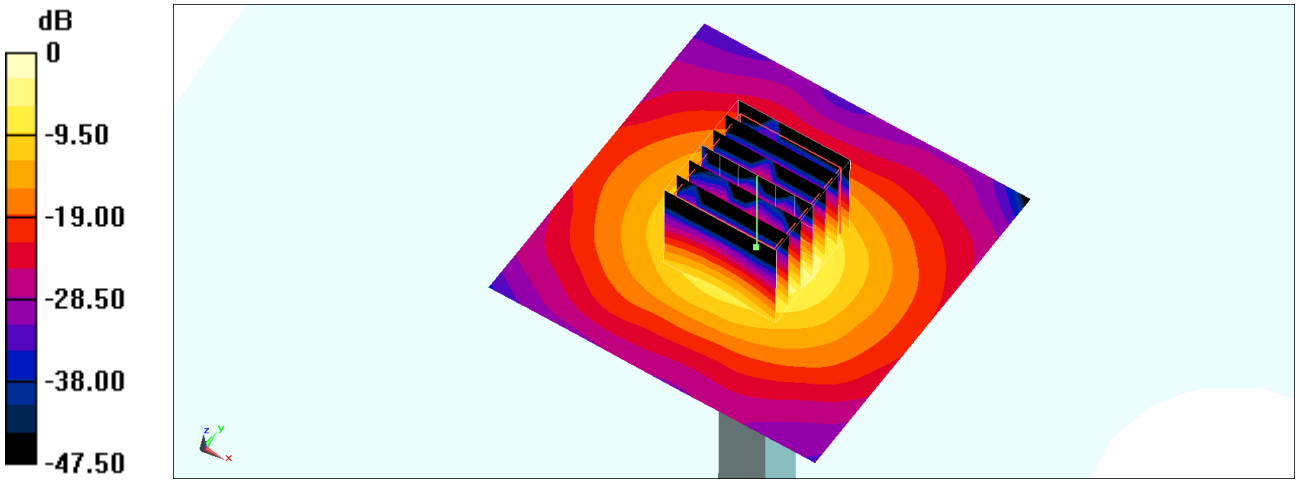

0 dB = 23.1 W/kg = 13.64 dBW/kg