Calibration Laboratory of
Schmid & Partner
Engineering AG
Zeughausstrasse 43, 8004 Zurich, Switzerland

S Schweizerischer Kalibrierdienst
C Service suisse d'étalonnage
Servizio svizzero di taratura
S Swiss Calibration Service

Accredited by the Swiss Accreditation Service (SAS)
The Swiss Accreditation Service is one of the signatories to the EA Multilateral Agreement for the recognition of calibration certificates

Accreditation No.: SCS 0108

Client **Sporton**

Certificate No: D2300V2-1088_Jul21

CALIBRATION CERTIFICATE

Object	D2300V2 - SN:1088
Calibration procedure(s)	QA CAL-05.v11 Calibration Procedure for SAR Validation Sources between 0.7-3 GHz
Calibration date:	July 13, 2021

This calibration certificate documents the traceability to national standards, which realize the physical units of measurements (SI).
The measurements and the uncertainties with confidence probability are given on the following pages and are part of the certificate.

All calibrations have been conducted in the closed laboratory facility: environment temperature (22 ± 3)°C and humidity < 70%.

Calibration Equipment used (M&TE critical for calibration)

Primary Standards	ID #	Cal Date (Certificate No.)	Scheduled Calibration
Power meter NRP	SN: 104778	09-Apr-21 (No. 217-03291/03292)	Apr-22
Power sensor NRP-Z91	SN: 103244	09-Apr-21 (No. 217-03291)	Apr-22
Power sensor NRP-Z91	SN: 103245	09-Apr-21 (No. 217-03292)	Apr-22
Reference 20 dB Attenuator	SN: BH9394 (20k)	09-Apr-21 (No. 217-03343)	Apr-22
Type-N mismatch combination	SN: 310982 / 06327	09-Apr-21 (No. 217-03344)	Apr-22
Reference Probe EX3DV4	SN: 7349	28-Dec-20 (No. EX3-7349_Dec20)	Dec-21
DAE4	SN: 601	02-Nov-20 (No. DAE4-601_Nov20)	Nov-21

Secondary Standards	ID #	Check Date (in house)	Scheduled Check
Power meter E4419B	SN: GB39512475	30-Oct-14 (in house check Oct-20)	In house check: Oct-22
Power sensor HP 8481A	SN: US37292783	07-Oct-15 (in house check Oct-20)	In house check: Oct-22
Power sensor HP 8481A	SN: MY41092317	07-Oct-15 (in house check Oct-20)	In house check: Oct-22
RF generator R&S SMT-06	SN: 100972	15-Jun-15 (in house check Oct-20)	In house check: Oct-22
Network Analyzer Agilent E8358A	SN: US41080477	31-Mar-14 (in house check Oct-20)	In house check: Oct-21

	Name	Function	Signature
Calibrated by:	Michael Weber	Laboratory Technician	
Approved by:	Katja Pokovic	Technical Manager	

Issued: July 27, 2021

This calibration certificate shall not be reproduced except in full without written approval of the laboratory.

Glossary:

TSL	tissue simulating liquid
ConvF	sensitivity in TSL / NORM x,y,z
N/A	not applicable or not measured

Calibration is Performed According to the Following Standards:

a) IEC/IEEE 62209-1528, "Measurement Procedure For The Assessment Of Specific Absorption Rate Of Human Exposure To Radio Frequency Fields From Hand-Held And Body-Worn Wireless Communication Devices - Part 1528: Human Models, Instrumentation And Procedures (Frequency Range of 4 MHz to 10 GHz)", October 2020.
b) KDB 865664, "SAR Measurement Requirements for 100 MHz to 6 GHz"

Additional Documentation:

c) DASY System Handbook

Methods Applied and Interpretation of Parameters:

- *Measurement Conditions:* Further details are available from the Validation Report at the end of the certificate. All figures stated in the certificate are valid at the frequency indicated.
- *Antenna Parameters with TSL:* The source is mounted in a touch configuration below the center marking of the flat phantom.
- *Return Loss:* This parameter is measured with the source positioned under the liquid filled phantom (as described in the measurement condition clause). The Return Loss ensures low reflected power. No uncertainty required.
- *SAR measured:* SAR measured at the stated antenna input power.
- *SAR normalized:* SAR as measured, normalized to an input power of 1 W at the antenna connector.
- *SAR for nominal TSL parameters:* The measured TSL parameters are used to calculate the nominal SAR result.

The reported uncertainty of measurement is stated as the standard uncertainty of measurement multiplied by the coverage factor k=2, which for a normal distribution corresponds to a coverage probability of approximately 95%.

Measurement Conditions

DASY system configuration, as far as not given on page 1.

DASY Version	DASY52	V52.10.4
Extrapolation	Advanced Extrapolation	
Phantom	Modular Flat Phantom	
Distance Dipole Center - TSL	10 mm	with Spacer
Zoom Scan Resolution	dx, dy, dz = 5 mm	
Frequency	2300 MHz ± 1 MHz	

Head TSL parameters

The following parameters and calculations were applied.

	Temperature	**Permittivity**	**Conductivity**
Nominal Head TSL parameters	22.0 °C	39.5	1.67 mho/m
Measured Head TSL parameters	(22.0 ± 0.2) °C	38.5 ± 6 %	1.72 mho/m ± 6 %
Head TSL temperature change during test	< 0.5 °C	----	----

SAR result with Head TSL

SAR averaged over 1 cm³ (1 g) of Head TSL	Condition	
SAR measured	250 mW input power	12.7 W/kg
SAR for nominal Head TSL parameters	normalized to 1W	**49.7 W/kg ± 17.0 % (k=2)**

SAR averaged over 10 cm³ (10 g) of Head TSL	condition	
SAR measured	250 mW input power	6.11 W/kg
SAR for nominal Head TSL parameters	normalized to 1W	**24.1 W/kg ± 16.5 % (k=2)**

Appendix (Additional assessments outside the scope of SCS 0108)

Antenna Parameters with Head TSL

Impedance, transformed to feed point	50.6 Ω - 3.5 jΩ
Return Loss	- 29.1 dB

General Antenna Parameters and Design

Electrical Delay (one direction)	1.170 ns

After long term use with 100W radiated power, only a slight warming of the dipole near the feedpoint can be measured.

The dipole is made of standard semirigid coaxial cable. The center conductor of the feeding line is directly connected to the second arm of the dipole. The antenna is therefore short-circuited for DC-signals. On some of the dipoles, small end caps are added to the dipole arms in order to improve matching when loaded according to the position as explained in the "Measurement Conditions" paragraph. The SAR data are not affected by this change. The overall dipole length is still according to the Standard.
No excessive force must be applied to the dipole arms, because they might bend or the soldered connections near the feedpoint may be damaged.

Additional EUT Data

Manufactured by	SPEAG

DASY5 Validation Report for Head TSL

Date: 13.07.2021

Test Laboratory: SPEAG, Zurich, Switzerland

DUT: Dipole 2300 MHz; Type: D2300V2; Serial: D2300V2 - SN:1088

Communication System: UID 0 - CW; Frequency: 2300 MHz
Medium parameters used: f = 2300 MHz; σ = 1.72 S/m; ε_r = 38.5; ρ = 1000 kg/m^3
Phantom section: Flat Section
Measurement Standard: DASY5 (IEEE/IEC/ANSI C63.19-2011)

DASY52 Configuration:

- Probe: EX3DV4 - SN7349; ConvF(7.98, 7.98, 7.98) @ 2300 MHz; Calibrated: 28.12.2020
- Sensor-Surface: 1.4mm (Mechanical Surface Detection)
- Electronics: DAE4 Sn601; Calibrated: 02.11.2020
- Phantom: Flat Phantom 5.0 (front); Type: QD 000 P50 AA; Serial: 1001
- DASY52 52.10.4(1535); SEMCAD X 14.6.14(7501)

Dipole Calibration for Head Tissue/Pin=250 mW, d=10mm/Zoom Scan (7x7x7)/Cube 0:

Measurement grid: dx=5mm, dy=5mm, dz=5mm
Reference Value = 116.7 V/m; Power Drift = 0.08 dB
Peak SAR (extrapolated) = 23.3 W/kg
SAR(1 g) = 12.7 W/kg; SAR(10 g) = 6.11 W/kg
Smallest distance from peaks to all points 3 dB below = 9 mm
Ratio of SAR at M2 to SAR at M1 = 54.6%
Maximum value of SAR (measured) = 20.0 W/kg

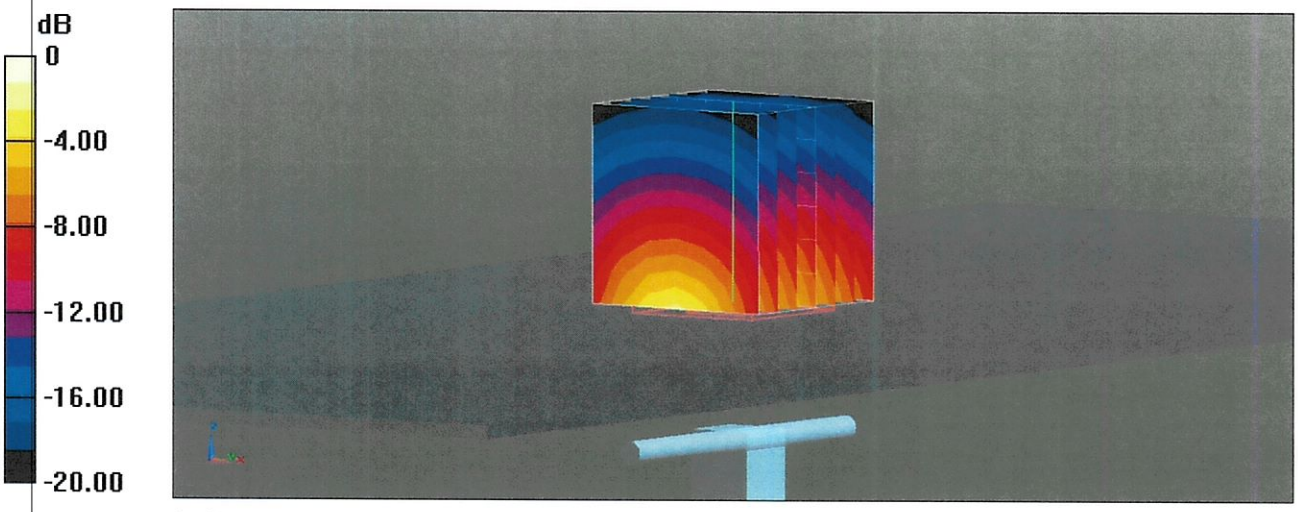

0 dB = 20.0 W/kg = 13.01 dBW/kg

Impedance Measurement Plot for Head TSL

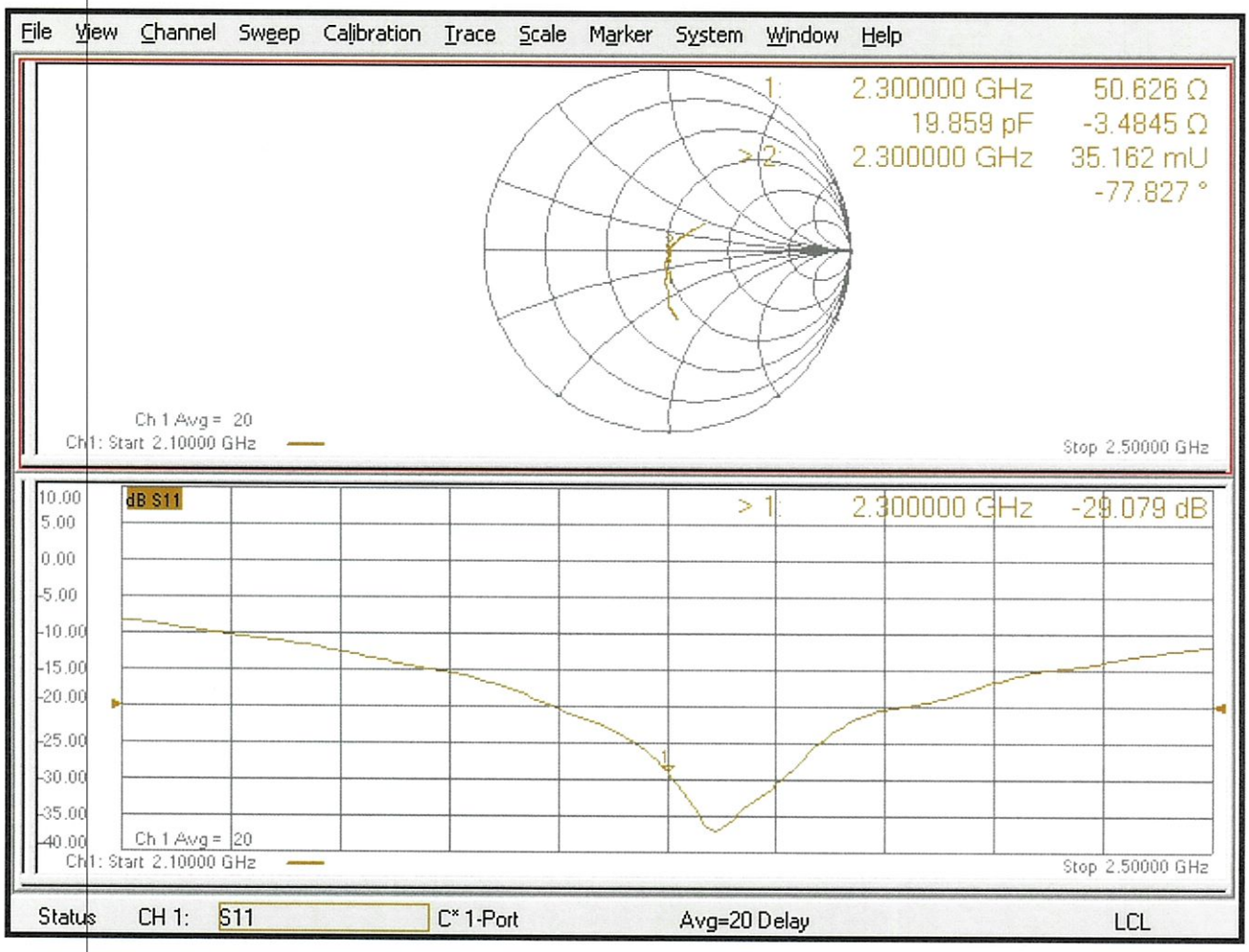

D2300V2, serial no. 1088 Extended Dipole Calibrations

Referring to KDB 865664, if dipoles are verified in return loss (<-20dB, within 20% of prior calibration), and in impedance (within 5 ohm of prior calibration), the annual calibration is not necessary and the calibration interval can be extended.

<Justification of the extended calibration>

D**2300**V2 – serial no. **1088**						
	2300MHZ					
Date of Measurement	Return-Loss (dB)	Delta (%)	Real Impedance (ohm)	Delta (ohm)	Imaginary Impedance (ohm)	Delta (ohm)
07.13.2021 (Cal. Report)	-29.079		50.626		-3.4845	
07.12.2022 (extended)	-31.845	9.51	48.295	2.331	-3.0620	-0.4225

The return loss is < -20dB, within 20% of prior calibration; the impedance is within 5 ohm of prior calibration. Therefore the verification result should support extended calibration.

<Dipole Verification Data> - D2300 V2, serial no. 1088 (Data of Measurement : 07.12.2022)

2300 MHz - Head

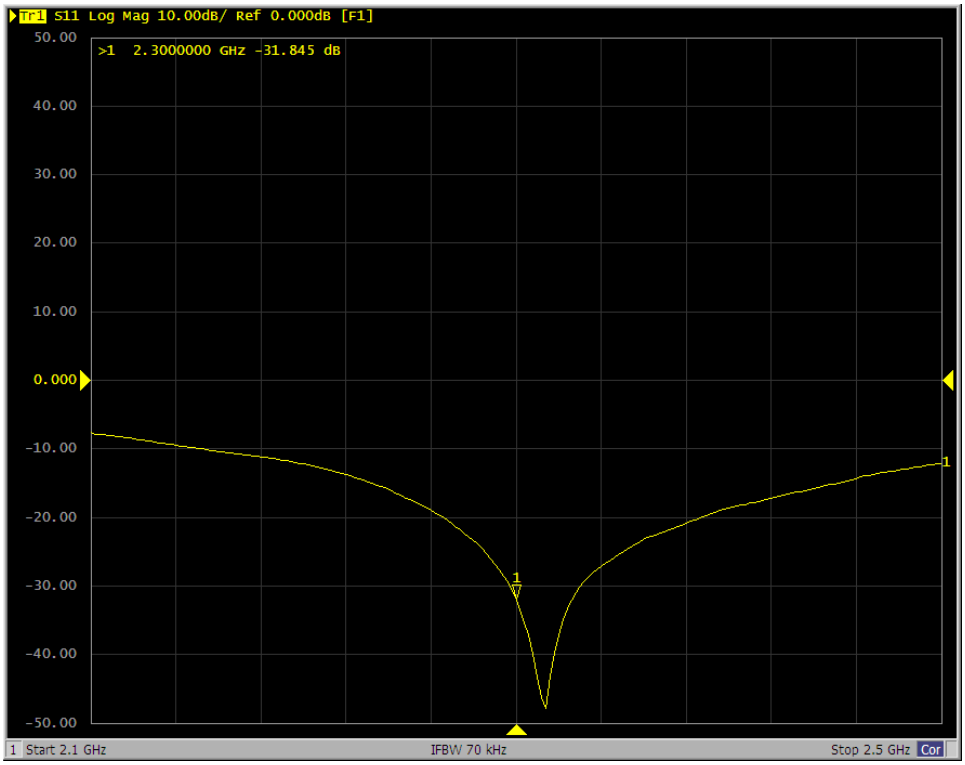

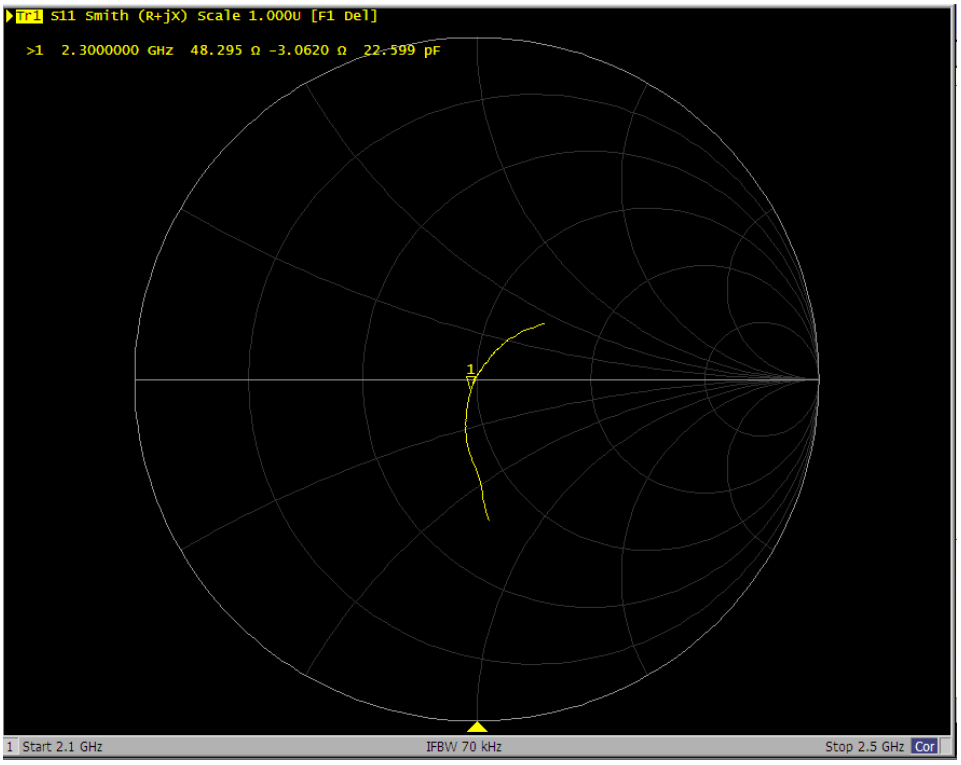

Calibration Laboratory of
Schmid & Partner
Engineering AG
Zeughausstrasse 43, 8004 Zurich, Switzerland

S Schweizerischer Kalibrierdienst
C Service suisse d'étalonnage
Servizio svizzero di taratura
S Swiss Calibration Service

Accredited by the Swiss Accreditation Service (SAS)
The Swiss Accreditation Service is one of the signatories to the EA Multilateral Agreement for the recognition of calibration certificates

Accreditation No.: SCS 0108

Client **Sporton**

Certificate No: D2450V2-736_Aug21

CALIBRATION CERTIFICATE

Object	D2450V2 - SN:736
Calibration procedure(s)	QA CAL-05.v11 Calibration Procedure for SAR Validation Sources between 0.7-3 GHz
Calibration date:	August 17, 2021

This calibration certificate documents the traceability to national standards, which realize the physical units of measurements (SI). The measurements and the uncertainties with confidence probability are given on the following pages and are part of the certificate.

All calibrations have been conducted in the closed laboratory facility: environment temperature (22 ± 3)°C and humidity < 70%.

Calibration Equipment used (M&TE critical for calibration)

Primary Standards	ID #	Cal Date (Certificate No.)	Scheduled Calibration
Power meter NRP	SN: 104778	09-Apr-21 (No. 217-03291/03292)	Apr-22
Power sensor NRP-Z91	SN: 103244	09-Apr-21 (No. 217-03291)	Apr-22
Power sensor NRP-Z91	SN: 103245	09-Apr-21 (No. 217-03292)	Apr-22
Reference 20 dB Attenuator	SN: BH9394 (20k)	09-Apr-21 (No. 217-03343)	Apr-22
Type-N mismatch combination	SN: 310982 / 06327	09-Apr-21 (No. 217-03344)	Apr-22
Reference Probe EX3DV4	SN: 7349	28-Dec-20 (No. EX3-7349_Dec20)	Dec-21
DAE4	SN: 601	02-Nov-20 (No. DAE4-601_Nov20)	Nov-21

Secondary Standards	ID #	Check Date (in house)	Scheduled Check
Power meter E4419B	SN: GB39512475	30-Oct-14 (in house check Oct-20)	In house check: Oct-22
Power sensor HP 8481A	SN: US37292783	07-Oct-15 (in house check Oct-20)	In house check: Oct-22
Power sensor HP 8481A	SN: MY41092317	07-Oct-15 (in house check Oct-20)	In house check: Oct-22
RF generator R&S SMT-06	SN: 100972	15-Jun-15 (in house check Oct-20)	In house check: Oct-22
Network Analyzer Agilent E8358A	SN: US41080477	31-Mar-14 (in house check Oct-20)	In house check: Oct-21

	Name	Function	Signature
Calibrated by:	Leif Klysner	Laboratory Technician	
Approved by:	Katja Pokovic	Technical Manager	

Issued: August 25, 2021

This calibration certificate shall not be reproduced except in full without written approval of the laboratory.

Glossary:

TSL	tissue simulating liquid
ConvF	sensitivity in TSL / NORM x,y,z
N/A	not applicable or not measured

Calibration is Performed According to the Following Standards:

a) IEC/IEEE 62209-1528, "Measurement Procedure For The Assessment Of Specific Absorption Rate Of Human Exposure To Radio Frequency Fields From Hand-Held And Body-Worn Wireless Communication Devices - Part 1528: Human Models, Instrumentation And Procedures (Frequency Range of 4 MHz to 10 GHz)", October 2020.
b) KDB 865664, "SAR Measurement Requirements for 100 MHz to 6 GHz"

Additional Documentation:

c) DASY System Handbook

Methods Applied and Interpretation of Parameters:

- *Measurement Conditions:* Further details are available from the Validation Report at the end of the certificate. All figures stated in the certificate are valid at the frequency indicated.
- *Antenna Parameters with TSL:* The source is mounted in a touch configuration below the center marking of the flat phantom.
- *Return Loss:* This parameter is measured with the source positioned under the liquid filled phantom (as described in the measurement condition clause). The Return Loss ensures low reflected power. No uncertainty required.
- *SAR measured:* SAR measured at the stated antenna input power.
- *SAR normalized:* SAR as measured, normalized to an input power of 1 W at the antenna connector.
- *SAR for nominal TSL parameters:* The measured TSL parameters are used to calculate the nominal SAR result.

The reported uncertainty of measurement is stated as the standard uncertainty of measurement multiplied by the coverage factor k=2, which for a normal distribution corresponds to a coverage probability of approximately 95%.

Measurement Conditions

DASY system configuration, as far as not given on page 1.

DASY Version	DASY52	V52.10.4
Extrapolation	Advanced Extrapolation	
Phantom	Modular Flat Phantom	
Distance Dipole Center - TSL	10 mm	with Spacer
Zoom Scan Resolution	dx, dy, dz = 5 mm	
Frequency	2450 MHz ± 1 MHz	

Head TSL parameters

The following parameters and calculations were applied.

	Temperature	**Permittivity**	**Conductivity**
Nominal Head TSL parameters	22.0 °C	39.2	1.80 mho/m
Measured Head TSL parameters	(22.0 ± 0.2) °C	37.9 ± 6 %	1.87 mho/m ± 6 %
Head TSL temperature change during test	< 0.5 °C	----	----

SAR result with Head TSL

SAR averaged over 1 cm^3 (1 g) of Head TSL	Condition	
SAR measured	250 mW input power	13.9 W/kg
SAR for nominal Head TSL parameters	normalized to 1W	**54.2 W/kg ± 17.0 % (k=2)**

SAR averaged over 10 cm^3 (10 g) of Head TSL	condition	
SAR measured	250 mW input power	6.43 W/kg
SAR for nominal Head TSL parameters	normalized to 1W	**25.3 W/kg ± 16.5 % (k=2)**

Appendix (Additional assessments outside the scope of SCS 0108)

Antenna Parameters with Head TSL

Impedance, transformed to feed point	55.3 Ω + 3.6 jΩ
Return Loss	- 24.3 dB

General Antenna Parameters and Design

Electrical Delay (one direction)	1.158 ns

After long term use with 100W radiated power, only a slight warming of the dipole near the feedpoint can be measured.

The dipole is made of standard semirigid coaxial cable. The center conductor of the feeding line is directly connected to the second arm of the dipole. The antenna is therefore short-circuited for DC-signals. On some of the dipoles, small end caps are added to the dipole arms in order to improve matching when loaded according to the position as explained in the "Measurement Conditions" paragraph. The SAR data are not affected by this change. The overall dipole length is still according to the Standard.
No excessive force must be applied to the dipole arms, because they might bend or the soldered connections near the feedpoint may be damaged.

Additional EUT Data

Manufactured by	SPEAG

DASY5 Validation Report for Head TSL

Date: 17.08.2021

Test Laboratory: SPEAG, Zurich, Switzerland

DUT: Dipole 2450 MHz; Type: D2450V2; Serial: D2450V2 - SN:736

Communication System: UID 0 - CW; Frequency: 2450 MHz
Medium parameters used: f = 2450 MHz; σ = 1.87 S/m; ε_r = 37.9; ρ = 1000 kg/m^3
Phantom section: Flat Section
Measurement Standard: DASY5 (IEEE/IEC/ANSI C63.19-2011)

DASY52 Configuration:

- Probe: EX3DV4 - SN7349; ConvF(7.96, 7.96, 7.96) @ 2450 MHz; Calibrated: 28.12.2020
- Sensor-Surface: 1.4mm (Mechanical Surface Detection)
- Electronics: DAE4 Sn601; Calibrated: 02.11.2020
- Phantom: Flat Phantom 5.0 (front); Type: QD 000 P50 AA; Serial: 1001
- DASY52 52.10.4(1535); SEMCAD X 14.6.14(7501)

Dipole Calibration for Head Tissue/Pin=250 mW, d=10mm/Zoom Scan (7x7x7)/Cube 0:

Measurement grid: dx=5mm, dy=5mm, dz=5mm
Reference Value = 118.4 V/m; Power Drift = 0.05 dB
Peak SAR (extrapolated) = 27.7 W/kg
SAR(1 g) = 13.9 W/kg; SAR(10 g) = 6.43 W/kg
Smallest distance from peaks to all points 3 dB below = 9 mm
Ratio of SAR at M2 to SAR at M1 = 50.3%
Maximum value of SAR (measured) = 22.8 W/kg

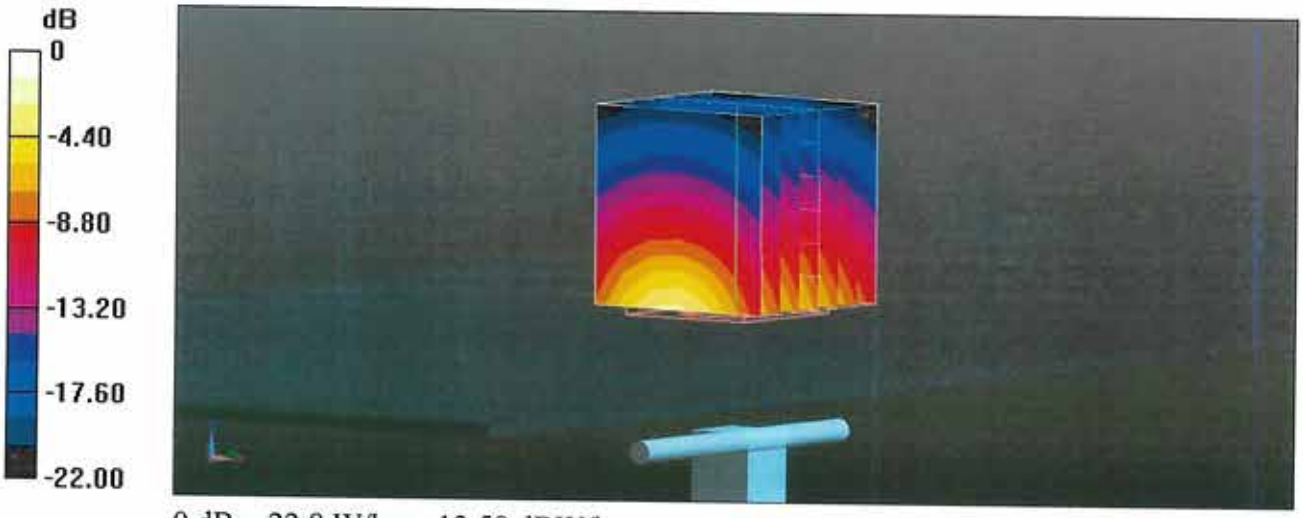

0 dB = 22.8 W/kg = 13.58 dBW/kg

Impedance Measurement Plot for Head TSL

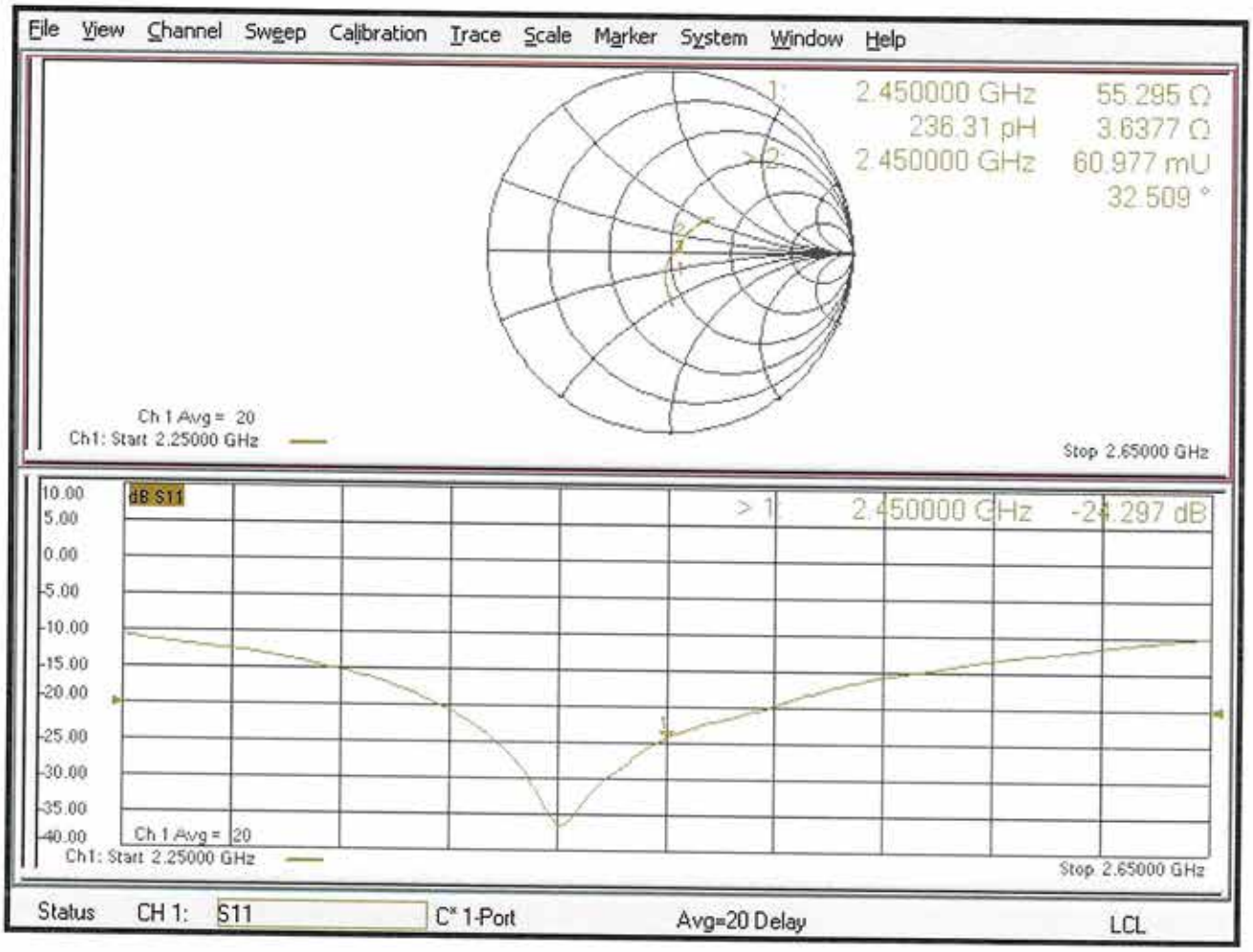

D2450V2, serial no. 736 Extended Dipole Calibrations

Referring to KDB 865664, if dipoles are verified in return loss (<-20dB, within 20% of prior calibration), and in impedance (within 5 ohm of prior calibration), the annual calibration is not necessary and the calibration interval can be extended.

<Justification of the extended calibration>

D**2450**V2 – serial no. **736**						
	2450MHZ					
Date of Measurement	Return-Loss (dB)	Delta (%)	Real Impedance (ohm)	Delta (ohm)	Imaginary Impedance (ohm)	Delta (ohm)
08.17.2021 (Cal. Report)	-24.297		55.295		3.6377	
08.16.2022 (extended)	-28.761	18.37	51.401	3.894	3.556	0.0817

The return loss is < -20dB, within 20% of prior calibration; the impedance is within 5 ohm of prior calibration. Therefore the verification result should support extended calibration.

<Dipole Verification Data> - D2450 V2, serial no. 736 (Data of Measurement : 08.16.2022)

2450 MHz - Head

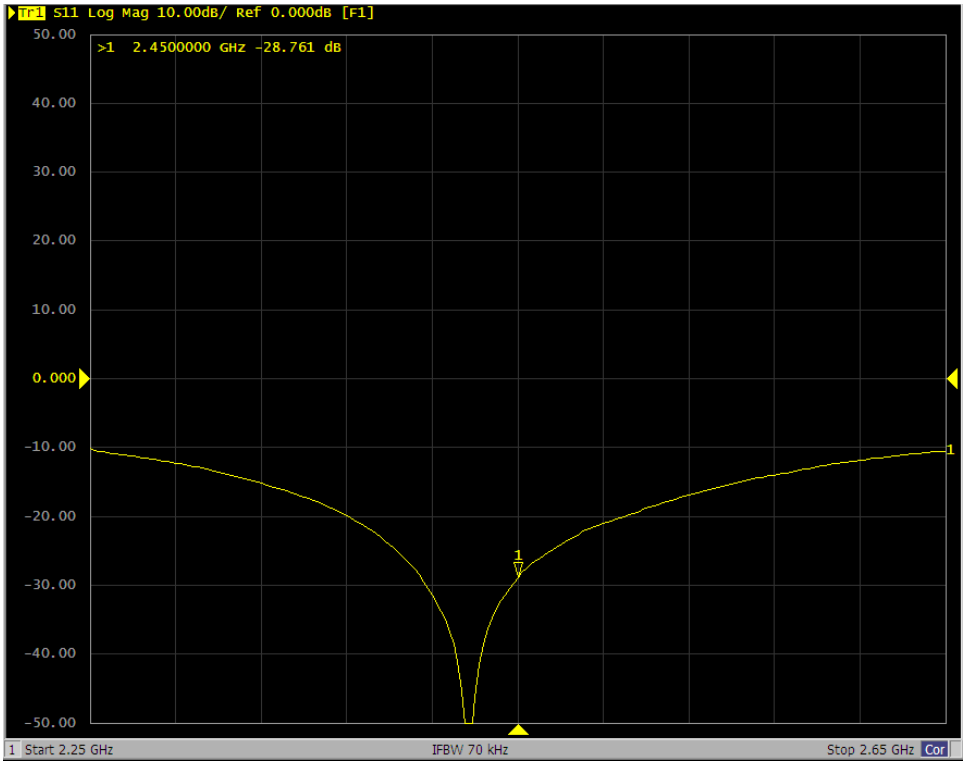

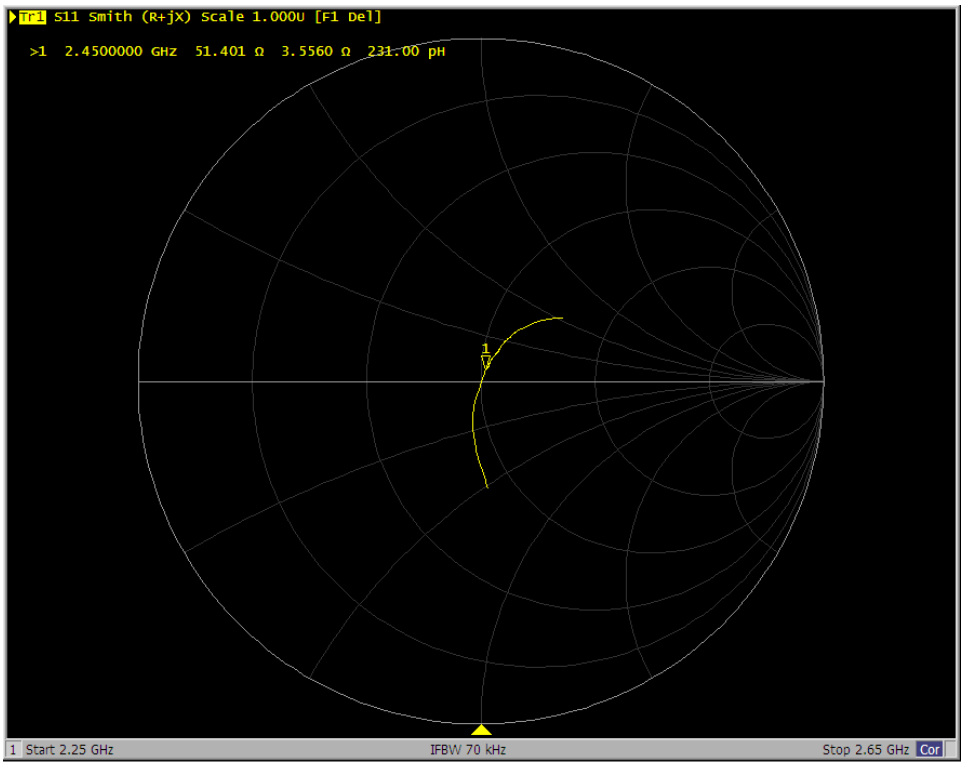

Calibration Laboratory of
Schmid & Partner
Engineering AG
Zeughausstrasse 43, 8004 Zurich, Switzerland

S Schweizerischer Kalibrierdienst
C Service suisse d'étalonnage
Servizio svizzero di taratura
S Swiss Calibration Service

Accredited by the Swiss Accreditation Service (SAS)
The Swiss Accreditation Service is one of the signatories to the EA Multilateral Agreement for the recognition of calibration certificates

Accreditation No.: SCS 0108

Client **Sporton**

Certificate No: D2450V2-929_Nov19

CALIBRATION CERTIFICATE

Object	D2450V2 - SN:929
Calibration procedure(s)	QA CAL-05.v11 Calibration Procedure for SAR Validation Sources between 0.7-3 GHz
Calibration date:	November 21, 2019

This calibration certificate documents the traceability to national standards, which realize the physical units of measurements (SI).
The measurements and the uncertainties with confidence probability are given on the following pages and are part of the certificate.

All calibrations have been conducted in the closed laboratory facility: environment temperature (22 ± 3)°C and humidity < 70%.

Calibration Equipment used (M&TE critical for calibration)

Primary Standards	ID #	Cal Date (Certificate No.)	Scheduled Calibration
Power meter NRP	SN: 104778	03-Apr-19 (No. 217-02892/02893)	Apr-20
Power sensor NRP-Z91	SN: 103244	03-Apr-19 (No. 217-02892)	Apr-20
Power sensor NRP-Z91	SN: 103245	03-Apr-19 (No. 217-02893)	Apr-20
Reference 20 dB Attenuator	SN: 5058 (20k)	04-Apr-19 (No. 217-02894)	Apr-20
Type-N mismatch combination	SN: 5047.2 / 06327	04-Apr-19 (No. 217-02895)	Apr-20
Reference Probe EX3DV4	SN: 7349	29-May-19 (No. EX3-7349_May19)	May-20
DAE4	SN: 601	30-Apr-19 (No. DAE4-601_Apr19)	Apr-20

Secondary Standards	ID #	Check Date (in house)	Scheduled Check
Power meter E4419B	SN: GB39512475	30-Oct-14 (in house check Feb-19)	In house check: Oct-20
Power sensor HP 8481A	SN: US37292783	07-Oct-15 (in house check Oct-18)	In house check: Oct-20
Power sensor HP 8481A	SN: MY41092317	07-Oct-15 (in house check Oct-18)	In house check: Oct-20
RF generator R&S SMT-06	SN: 100972	15-Jun-15 (in house check Oct-18)	In house check: Oct-20
Network Analyzer Agilent E8358A	SN: US41080477	31-Mar-14 (in house check Oct-19)	In house check: Oct-20

	Name	Function	Signature
Calibrated by:	Claudio Leubler	Laboratory Technician	
Approved by:	Katja Pokovic	Technical Manager	

Issued: November 25, 2019

This calibration certificate shall not be reproduced except in full without written approval of the laboratory.

Glossary:

TSL	tissue simulating liquid
ConvF	sensitivity in TSL / NORM x,y,z
N/A	not applicable or not measured

Calibration is Performed According to the Following Standards:

a) IEEE Std 1528-2013, "IEEE Recommended Practice for Determining the Peak Spatial-Averaged Specific Absorption Rate (SAR) in the Human Head from Wireless Communications Devices: Measurement Techniques", June 2013
b) IEC 62209-1, "Measurement procedure for the assessment of Specific Absorption Rate (SAR) from hand-held and body-mounted devices used next to the ear (frequency range of 300 MHz to 6 GHz)", July 2016
c) IEC 62209-2, "Procedure to determine the Specific Absorption Rate (SAR) for wireless communication devices used in close proximity to the human body (frequency range of 30 MHz to 6 GHz)", March 2010
d) KDB 865664, "SAR Measurement Requirements for 100 MHz to 6 GHz"

Additional Documentation:

e) DASY4/5 System Handbook

Methods Applied and Interpretation of Parameters:

- *Measurement Conditions:* Further details are available from the Validation Report at the end of the certificate. All figures stated in the certificate are valid at the frequency indicated.
- *Antenna Parameters with TSL:* The dipole is mounted with the spacer to position its feed point exactly below the center marking of the flat phantom section, with the arms oriented parallel to the body axis.
- *Feed Point Impedance and Return Loss:* These parameters are measured with the dipole positioned under the liquid filled phantom. The impedance stated is transformed from the measurement at the SMA connector to the feed point. The Return Loss ensures low reflected power. No uncertainty required.
- *Electrical Delay:* One-way delay between the SMA connector and the antenna feed point. No uncertainty required.
- *SAR measured:* SAR measured at the stated antenna input power.
- *SAR normalized:* SAR as measured, normalized to an input power of 1 W at the antenna connector.
- *SAR for nominal TSL parameters:* The measured TSL parameters are used to calculate the nominal SAR result.

The reported uncertainty of measurement is stated as the standard uncertainty of measurement multiplied by the coverage factor k=2, which for a normal distribution corresponds to a coverage probability of approximately 95%.

Measurement Conditions

DASY system configuration, as far as not given on page 1.

DASY Version	DASY5	V52.10.3
Extrapolation	Advanced Extrapolation	
Phantom	Modular Flat Phantom	
Distance Dipole Center - TSL	10 mm	with Spacer
Zoom Scan Resolution	dx, dy, dz = 5 mm	
Frequency	2450 MHz ± 1 MHz	

Head TSL parameters

The following parameters and calculations were applied.

	Temperature	**Permittivity**	**Conductivity**
Nominal Head TSL parameters	22.0 °C	39.2	1.80 mho/m
Measured Head TSL parameters	(22.0 ± 0.2) °C	38.2 ± 6 %	1.84 mho/m ± 6 %
Head TSL temperature change during test	< 0.5 °C	----	----

SAR result with Head TSL

SAR averaged over 1 cm³ (1 g) of Head TSL	Condition	
SAR measured	250 mW input power	13.5 W/kg
SAR for nominal Head TSL parameters	normalized to 1W	**53.1 W/kg ± 17.0 % (k=2)**

SAR averaged over 10 cm³ (10 g) of Head TSL	condition	
SAR measured	250 mW input power	6.24 W/kg
SAR for nominal Head TSL parameters	normalized to 1W	**24.7 W/kg ± 16.5 % (k=2)**

Appendix (Additional assessments outside the scope of SCS 0108)

Antenna Parameters with Head TSL

Impedance, transformed to feed point	52.6 Ω + 5.2 jΩ
Return Loss	- 24.9 dB

General Antenna Parameters and Design

Electrical Delay (one direction)	1.161 ns

After long term use with 100W radiated power, only a slight warming of the dipole near the feedpoint can be measured.

The dipole is made of standard semirigid coaxial cable. The center conductor of the feeding line is directly connected to the second arm of the dipole. The antenna is therefore short-circuited for DC-signals. On some of the dipoles, small end caps are added to the dipole arms in order to improve matching when loaded according to the position as explained in the "Measurement Conditions" paragraph. The SAR data are not affected by this change. The overall dipole length is still according to the Standard.
No excessive force must be applied to the dipole arms, because they might bend or the soldered connections near the feedpoint may be damaged.

Additional EUT Data

Manufactured by	SPEAG

DASY5 Validation Report for Head TSL

Date: 21.11.2019

Test Laboratory: SPEAG, Zurich, Switzerland

DUT: Dipole 2450 MHz; Type: D2450V2; Serial: D2450V2 - SN:929

Communication System: UID 0 - CW; Frequency: 2450 MHz
Medium parameters used: f = 2450 MHz; σ = 1.84 S/m; ε_r = 38.2; ρ = 1000 kg/m^3
Phantom section: Flat Section
Measurement Standard: DASY5 (IEEE/IEC/ANSI C63.19-2011)

DASY52 Configuration:

- Probe: EX3DV4 - SN7349; ConvF(7.9, 7.9, 7.9) @ 2450 MHz; Calibrated: 29.05.2019
- Sensor-Surface: 1.4mm (Mechanical Surface Detection)
- Electronics: DAE4 Sn601; Calibrated: 30.04.2019
- Phantom: Flat Phantom 5.0 (front); Type: QD 000 P50 AA; Serial: 1001
- DASY52 52.10.3(1513); SEMCAD X 14.6.13(7474)

Dipole Calibration for Head Tissue/Pin=250 mW, d=10mm/Zoom Scan (7x7x7)/Cube 0:

Measurement grid: dx=5mm, dy=5mm, dz=5mm
Reference Value = 117.5 V/m; Power Drift = 0.07 dB
Peak SAR (extrapolated) = 26.8 W/kg
SAR(1 g) = 13.5 W/kg; SAR(10 g) = 6.24 W/kg
Smallest distance from peaks to all points 3 dB below = 9 mm
Ratio of SAR at M2 to SAR at M1 = 50.9%
Maximum value of SAR (measured) = 22.1 W/kg

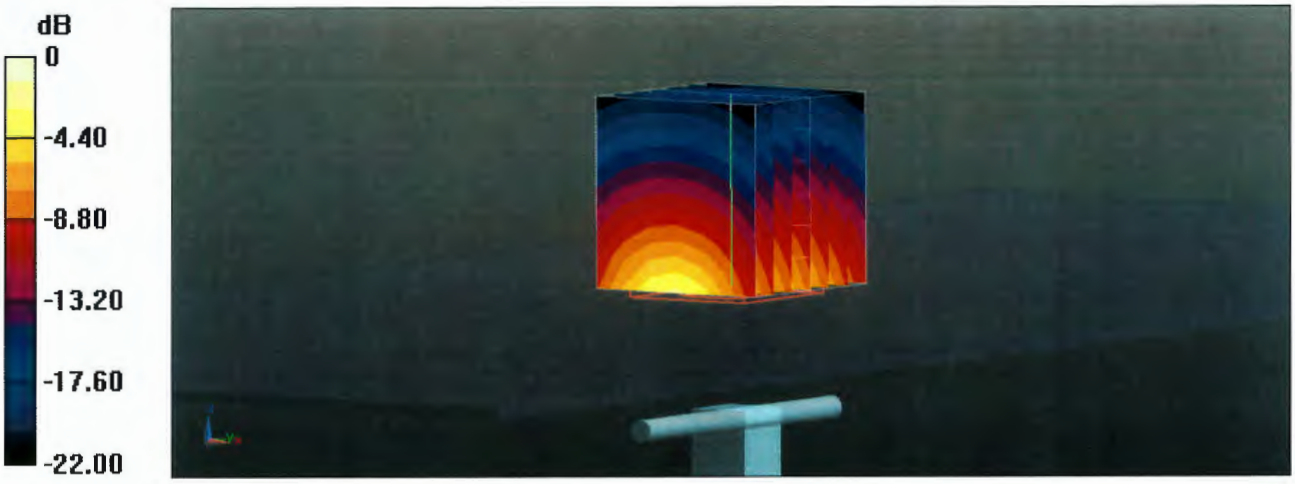

0 dB = 22.1 W/kg = 13.44 dBW/kg

Impedance Measurement Plot for Head TSL

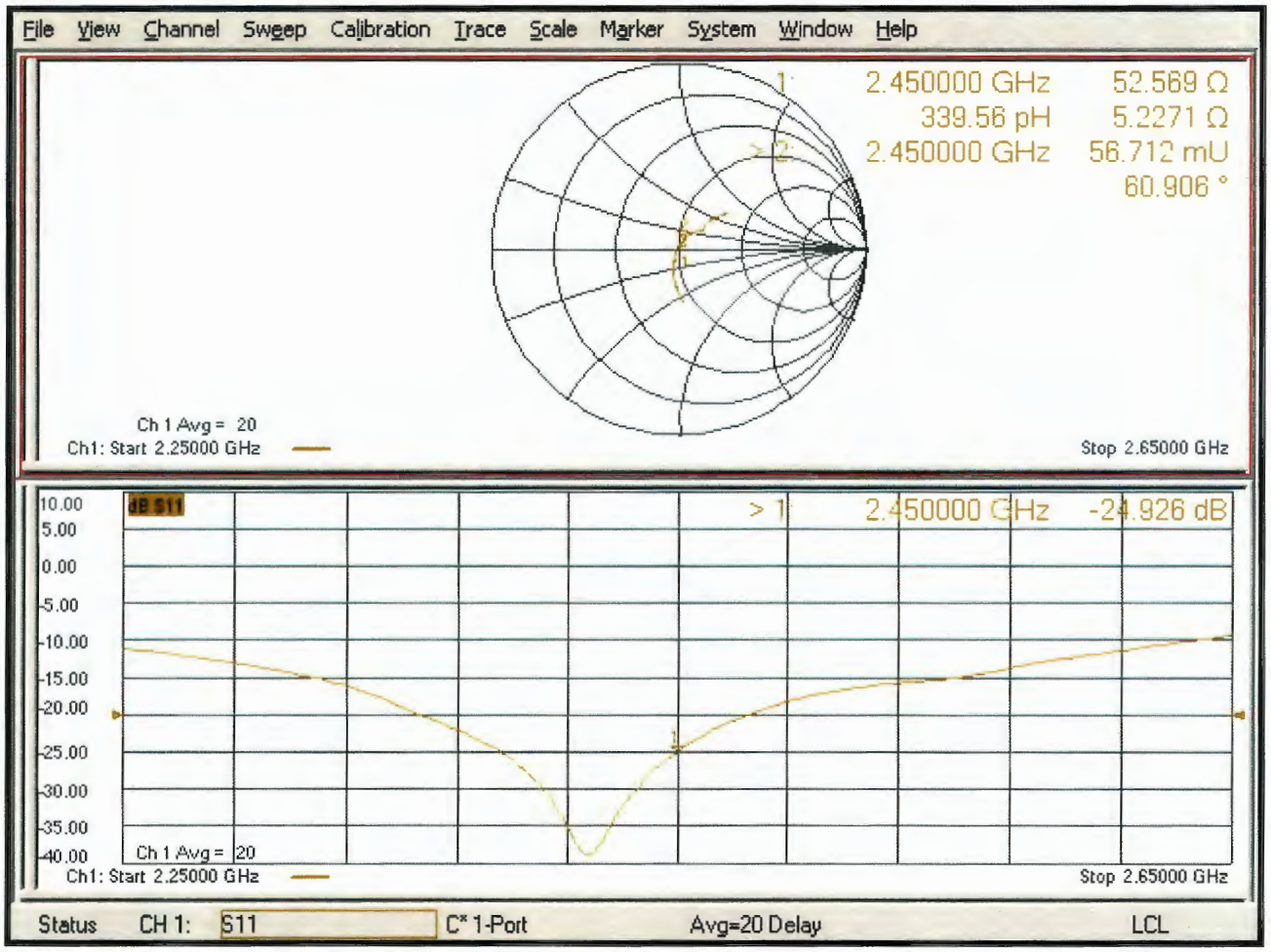

Appendix: Transfer Calibration at Four Validation Locations on SAM Head[1]

Evaluation Condition

Phantom	SAM Head Phantom	For usage with cSAR3D**V2**-R/L

SAR result with SAM Head (Top ≅ C0)

SAR averaged over 1 cm³ (1 g) of Head TSL	Condition	
SAR for nominal Head TSL parameters	normalized to 1W	**56.6 W/kg ± 17.5 % (k=2)**

SAR averaged over 10 cm³ (10 g) of Head TSL	condition	
SAR for nominal Head TSL parameters	normalized to 1W	**26.3 W/kg ± 16.9 % (k=2)**

SAR result with SAM Head (Mouth ≅ F90)

SAR averaged over 1 cm³ (1 g) of Head TSL	Condition	
SAR for nominal Head TSL parameters	normalized to 1W	**57.7 W/kg ± 17.5 % (k=2)**

SAR averaged over 10 cm³ (10 g) of Head TSL	condition	
SAR for nominal Head TSL parameters	normalized to 1W	**27.6 W/kg ± 16.9 % (k=2)**

SAR result with SAM Head (Neck ≅ H0)

SAR averaged over 1 cm³ (1 g) of Head TSL	Condition	
SAR for nominal Head TSL parameters	normalized to 1W	**54.4 W/kg ± 17.5 % (k=2)**

SAR averaged over 10 cm³ (10 g) of Head TSL	condition	
SAR for nominal Head TSL parameters	normalized to 1W	**25.2 W/kg ± 16.9 % (k=2)**

SAR result with SAM Head (Ear ≅ D90)

SAR averaged over 1 cm³ (1 g) of Head TSL	Condition	
SAR for nominal Head TSL parameters	normalized to 1W	**34.8 W/kg ± 17.5 % (k=2)**

SAR averaged over 10 cm³ (10 g) of Head TSL	condition	
SAR for nominal Head TSL parameters	normalized to 1W	**17.5 W/kg ± 16.9 % (k=2)**

[1] Additional assessments outside the current scope of SCS 0108

D2450V2, serial no. 929 Extended Dipole Calibrations

Referring to KDB 865664, if dipoles are verified in return loss (<-20dB, within 20% of prior calibration), and in impedance (within 5 ohm of prior calibration), the annual calibration is not necessary and the calibration interval can be extended.

<Justification of the extended calibration>

D**2450**V2 – serial no. **929**						
	2450MHZ					
Date of Measurement	Return-Loss (dB)	Delta (%)	Real Impedance (ohm)	Delta (ohm)	Imaginary Impedance (ohm)	Delta (ohm)
11.21.2019 (Cal. Report)	-24.926		52.569		5.2271	
11.20.2020 (extended)	-26.971	8.20	50.932	-1.637	4.4757	-0.7514
11.19.2021 (extended)	-23.805	-4.50	50.843	-1.726	5.6695	0.4424

The return loss is < -20dB, within 20% of prior calibration; the impedance is within 5 ohm of prior calibration. Therefore the verification result should support extended calibration.

<Dipole Verification Data> - D2450 V2, serial no. 929 (Data of Measurement : 11.20.2020)

2450 MHz - Head

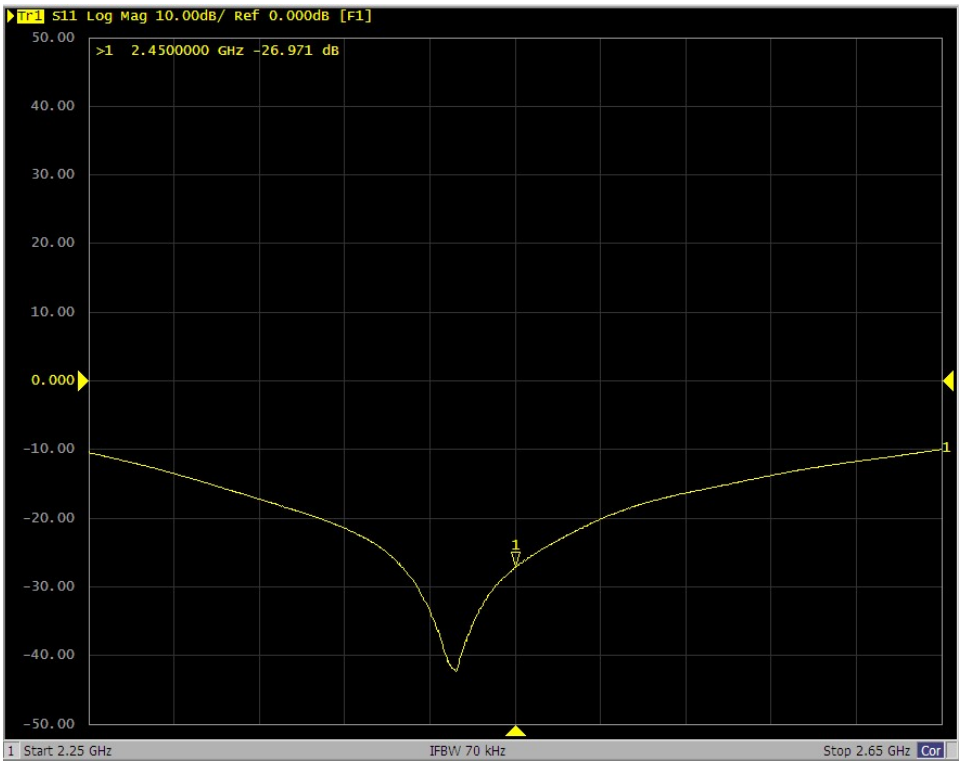

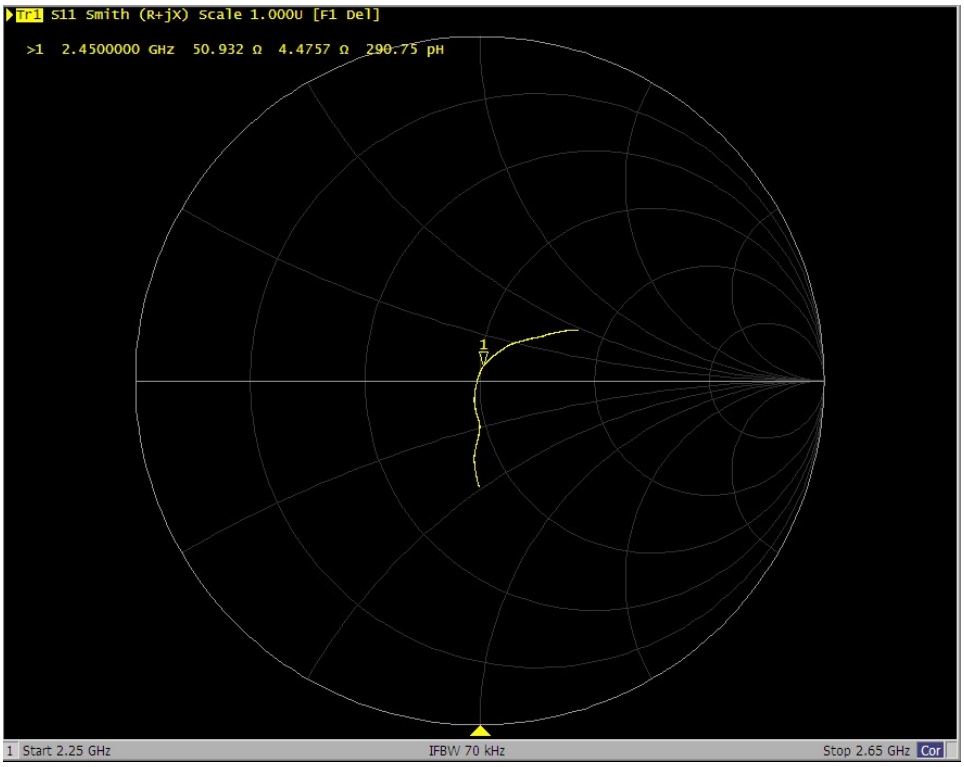

<Dipole Verification Data> - D2450 V2, serial no. 929 (Data of Measurement : 11.19.2021)

2450 MHz - Head

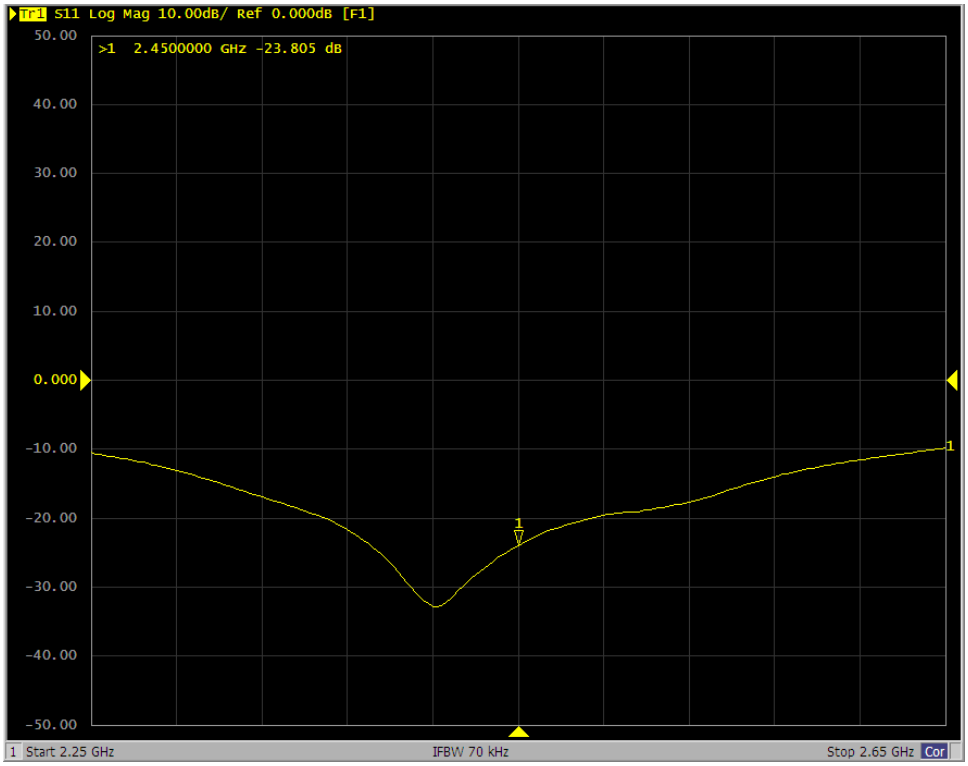

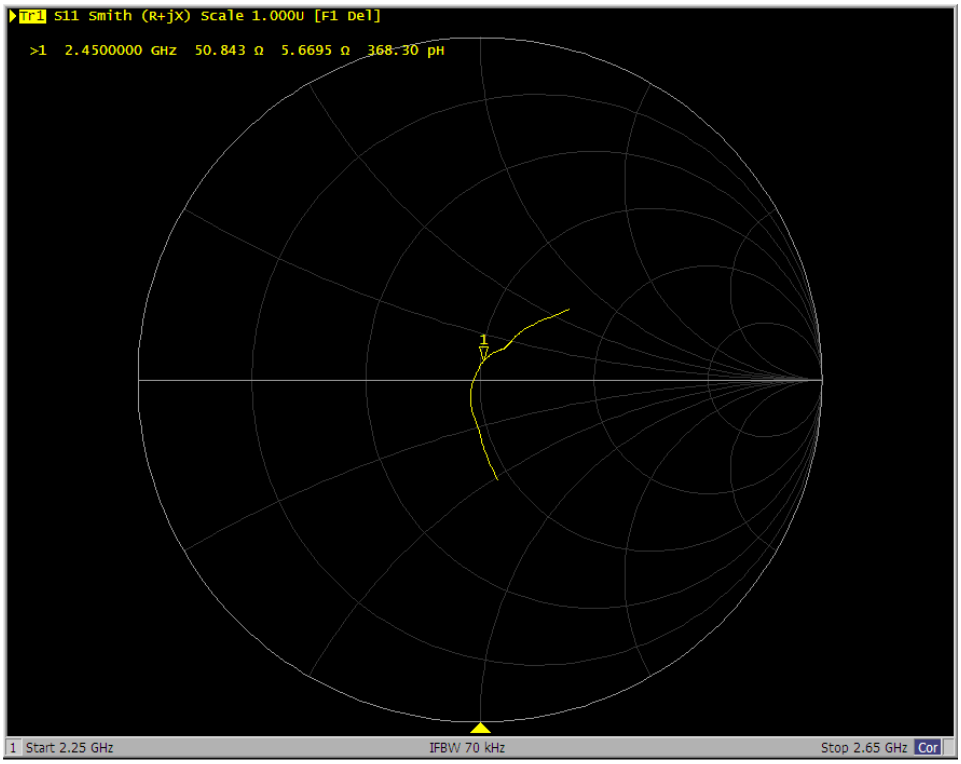

SPORTON INTERNATIONAL INC.

TEL : 886-3-327-3456

FAX : 886-3-328-4978

Calibration Laboratory of
Schmid & Partner
Engineering AG
Zeughausstrasse 43, 8004 Zurich, Switzerland

S Schweizerischer Kalibrierdienst
C Service suisse d'étalonnage
Servizio svizzero di taratura
S Swiss Calibration Service

Accredited by the Swiss Accreditation Service (SAS)
The Swiss Accreditation Service is one of the signatories to the EA Multilateral Agreement for the recognition of calibration certificates

Accreditation No.: SCS 0108

Client **Sporton**

Certificate No: D2450V2-806_Mar22

CALIBRATION CERTIFICATE

Object	D2450V2 - SN:806
Calibration procedure(s)	QA CAL-05.v11 Calibration Procedure for SAR Validation Sources between 0.7-3 GHz
Calibration date:	March 24, 2022

This calibration certificate documents the traceability to national standards, which realize the physical units of measurements (SI).
The measurements and the uncertainties with confidence probability are given on the following pages and are part of the certificate.

All calibrations have been conducted in the closed laboratory facility: environment temperature (22 ± 3)°C and humidity < 70%.

Calibration Equipment used (M&TE critical for calibration)

Primary Standards	ID #	Cal Date (Certificate No.)	Scheduled Calibration
Power meter NRP	SN: 104778	09-Apr-21 (No. 217-03291/03292)	Apr-22
Power sensor NRP-Z91	SN: 103244	09-Apr-21 (No. 217-03291)	Apr-22
Power sensor NRP-Z91	SN: 103245	09-Apr-21 (No. 217-03292)	Apr-22
Reference 20 dB Attenuator	SN: BH9394 (20k)	09-Apr-21 (No. 217-03343)	Apr-22
Type-N mismatch combination	SN: 310982 / 06327	09-Apr-21 (No. 217-03344)	Apr-22
Reference Probe EX3DV4	SN: 7349	31-Dec-21 (No. EX3-7349_Dec21)	Dec-22
DAE4	SN: 601	01-Nov-21 (No. DAE4-601_Nov21)	Nov-22

Secondary Standards	ID #	Check Date (in house)	Scheduled Check
Power meter E4419B	SN: GB39512475	30-Oct-14 (in house check Oct-20)	In house check: Oct-22
Power sensor HP 8481A	SN: US37292783	07-Oct-15 (in house check Oct-20)	In house check: Oct-22
Power sensor HP 8481A	SN: MY41093315	07-Oct-15 (in house check Oct-20)	In house check: Oct-22
RF generator R&S SMT-06	SN: 100972	15-Jun-15 (in house check Oct-20)	In house check: Oct-22
Network Analyzer Agilent E8358A	SN: US41080477	31-Mar-14 (in house check Oct-20)	In house check: Oct-22

	Name	Function	Signature
Calibrated by:	Aidonia Georgiadou	Laboratory Technician	
Approved by:	Niels Kuster	Quality Manager	

Issued: March 28, 2022

This calibration certificate shall not be reproduced except in full without written approval of the laboratory.

Glossary:

TSL	tissue simulating liquid
ConvF	sensitivity in TSL / NORM x,y,z
N/A	not applicable or not measured

Calibration is Performed According to the Following Standards:

a) IEC/IEEE 62209-1528, "Measurement Procedure For The Assessment Of Specific Absorption Rate Of Human Exposure To Radio Frequency Fields From Hand-Held And Body-Worn Wireless Communication Devices - Part 1528: Human Models, Instrumentation And Procedures (Frequency Range of 4 MHz to 10 GHz)", October 2020.
b) KDB 865664, "SAR Measurement Requirements for 100 MHz to 6 GHz"

Additional Documentation:

c) DASY System Handbook

Methods Applied and Interpretation of Parameters:

- *Measurement Conditions:* Further details are available from the Validation Report at the end of the certificate. All figures stated in the certificate are valid at the frequency indicated.
- *Antenna Parameters with TSL:* The source is mounted in a touch configuration below the center marking of the flat phantom.
- *Return Loss:* This parameter is measured with the source positioned under the liquid filled phantom (as described in the measurement condition clause). The Return Loss ensures low reflected power. No uncertainty required.
- *SAR measured:* SAR measured at the stated antenna input power.
- *SAR normalized:* SAR as measured, normalized to an input power of 1 W at the antenna connector.
- *SAR for nominal TSL parameters:* The measured TSL parameters are used to calculate the nominal SAR result.

The reported uncertainty of measurement is stated as the standard uncertainty of measurement multiplied by the coverage factor k=2, which for a normal distribution corresponds to a coverage probability of approximately 95%.

Measurement Conditions

DASY system configuration, as far as not given on page 1.

DASY Version	DASY52	V52.10.4
Extrapolation	Advanced Extrapolation	
Phantom	Modular Flat Phantom	
Distance Dipole Center - TSL	10 mm	with Spacer
Zoom Scan Resolution	dx, dy, dz = 5 mm	
Frequency	2450 MHz ± 1 MHz	

Head TSL parameters

The following parameters and calculations were applied.

	Temperature	**Permittivity**	**Conductivity**
Nominal Head TSL parameters	22.0 °C	39.2	1.80 mho/m
Measured Head TSL parameters	(22.0 ± 0.2) °C	37.8 ± 6 %	1.85 mho/m ± 6 %
Head TSL temperature change during test	< 0.5 °C	----	----

SAR result with Head TSL

SAR averaged over 1 cm^3 (1 g) of Head TSL	Condition	
SAR measured	250 mW input power	13.5 W/kg
SAR for nominal Head TSL parameters	normalized to 1W	**52.7 W/kg ± 17.0 % (k=2)**

SAR averaged over 10 cm^3 (10 g) of Head TSL	condition	
SAR measured	250 mW input power	6.18 W/kg
SAR for nominal Head TSL parameters	normalized to 1W	**24.4 W/kg ± 16.5 % (k=2)**

Appendix (Additional assessments outside the scope of SCS 0108)

Antenna Parameters with Head TSL

Impedance, transformed to feed point	56.3 Ω + 5.5 jΩ
Return Loss	- 22.1 dB

General Antenna Parameters and Design

Electrical Delay (one direction)	1.162 ns

After long term use with 100W radiated power, only a slight warming of the dipole near the feedpoint can be measured.

The dipole is made of standard semirigid coaxial cable. The center conductor of the feeding line is directly connected to the second arm of the dipole. The antenna is therefore short-circuited for DC-signals. On some of the dipoles, small end caps are added to the dipole arms in order to improve matching when loaded according to the position as explained in the "Measurement Conditions" paragraph. The SAR data are not affected by this change. The overall dipole length is still according to the Standard.
No excessive force must be applied to the dipole arms, because they might bend or the soldered connections near the feedpoint may be damaged.

Additional EUT Data

Manufactured by	SPEAG

DASY5 Validation Report for Head TSL

Date: 24.03.2022

Test Laboratory: SPEAG, Zurich, Switzerland

DUT: Dipole 2450 MHz; Type: D2450V2; Serial: D2450V2 - SN:806

Communication System: UID 0 - CW; Frequency: 2450 MHz
Medium parameters used: f = 2450 MHz; σ = 1.85 S/m; ε_r = 37.8; ρ = 1000 kg/m^3
Phantom section: Flat Section
Measurement Standard: DASY5 (IEEE/IEC/ANSI C63.19-2011)

DASY52 Configuration:

- Probe: EX3DV4 - SN7349; ConvF(7.96, 7.96, 7.96) @ 2450 MHz; Calibrated: 31.12.2021
- Sensor-Surface: 1.4mm (Mechanical Surface Detection)
- Electronics: DAE4 Sn601; Calibrated: 01.11.2021
- Phantom: Flat Phantom 5.0 (front); Type: QD 000 P50 AA; Serial: 1001
- DASY52 52.10.4(1535); SEMCAD X 14.6.14(7501)

Dipole Calibration for Head Tissue/Pin=250 mW, d=10mm/Zoom Scan (7x7x7)/Cube 0:

Measurement grid: dx=5mm, dy=5mm, dz=5mm
Reference Value = 116.2 V/m; Power Drift = 0.09 dB
Peak SAR (extrapolated) = 27.1 W/kg
SAR(1 g) = 13.5 W/kg; SAR(10 g) = 6.18 W/kg
Smallest distance from peaks to all points 3 dB below = 9 mm
Ratio of SAR at M2 to SAR at M1 = 49.5%
Maximum value of SAR (measured) = 22.3 W/kg

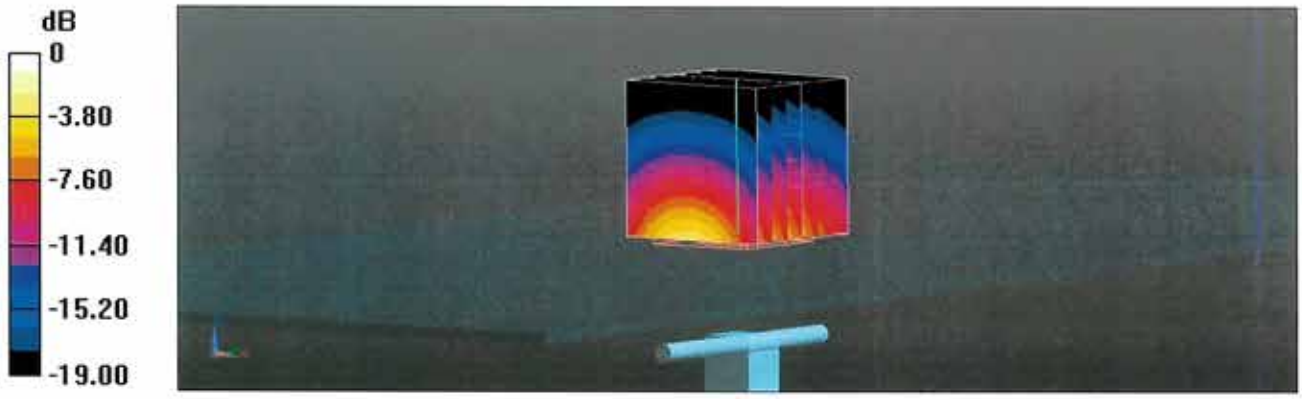

0 dB = 22.3 W/kg = 13.49 dBW/kg

Impedance Measurement Plot for Head TSL

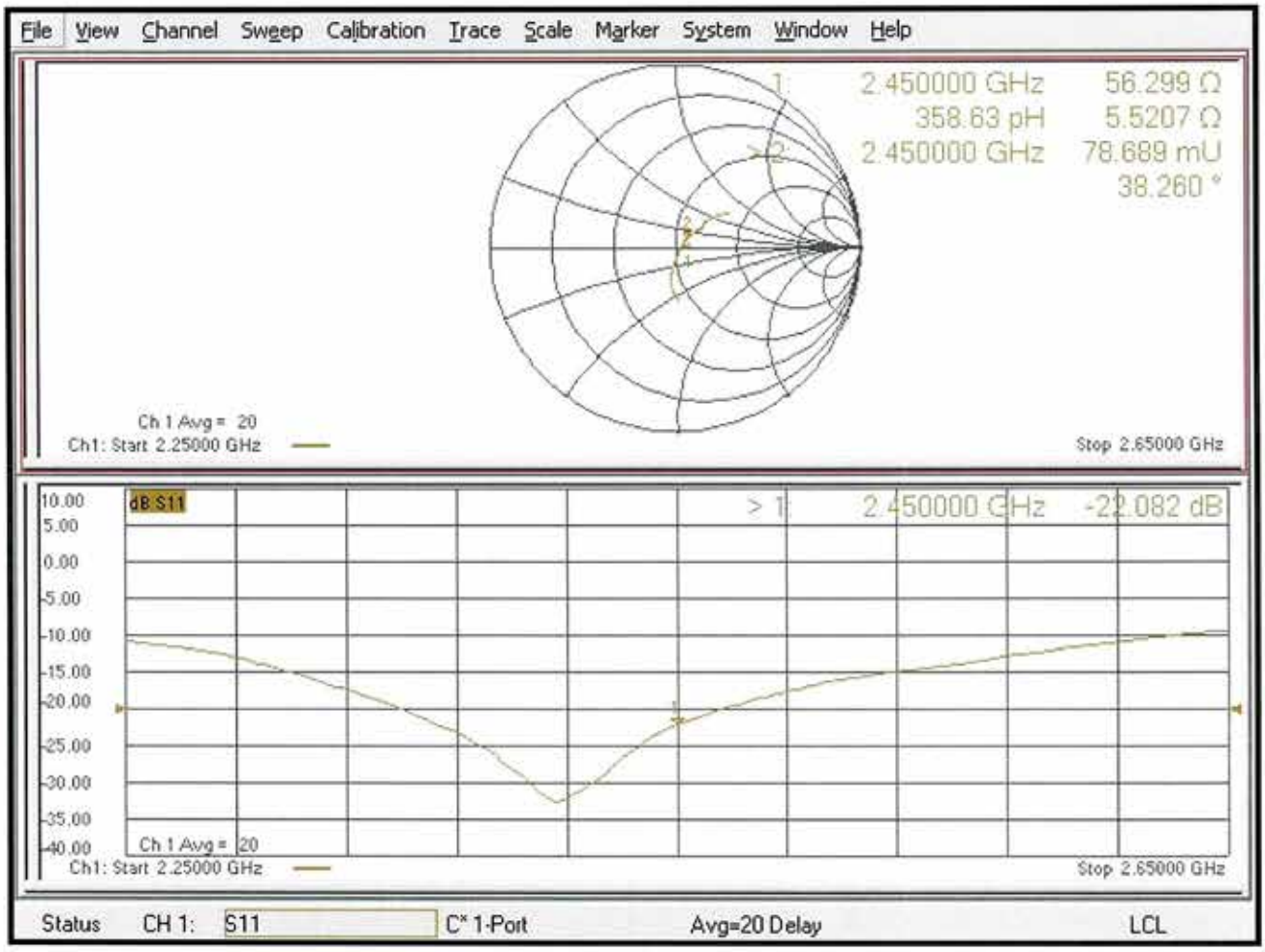

Calibration Laboratory of
Schmid & Partner
Engineering AG
Zeughausstrasse 43, 8004 Zurich, Switzerland

S Schweizerischer Kalibrierdienst
C Service suisse d'étalonnage
Servizio svizzero di taratura
S Swiss Calibration Service

Accredited by the Swiss Accreditation Service (SAS)
The Swiss Accreditation Service is one of the signatories to the EA Multilateral Agreement for the recognition of calibration certificates

Accreditation No.: SCS 0108

Client **Sporton**

Certificate No: D2600V2-1008_Aug21

CALIBRATION CERTIFICATE

Object	D2600V2 - SN:1008
Calibration procedure(s)	QA CAL-05.v11 Calibration Procedure for SAR Validation Sources between 0.7-3 GHz
Calibration date:	August 17, 2021

This calibration certificate documents the traceability to national standards, which realize the physical units of measurements (SI).
The measurements and the uncertainties with confidence probability are given on the following pages and are part of the certificate.

All calibrations have been conducted in the closed laboratory facility: environment temperature (22 ± 3)°C and humidity < 70%.

Calibration Equipment used (M&TE critical for calibration)

Primary Standards	ID #	Cal Date (Certificate No.)	Scheduled Calibration
Power meter NRP	SN: 104778	09-Apr-21 (No. 217-03291/03292)	Apr-22
Power sensor NRP-Z91	SN: 103244	09-Apr-21 (No. 217-03291)	Apr-22
Power sensor NRP-Z91	SN: 103245	09-Apr-21 (No. 217-03292)	Apr-22
Reference 20 dB Attenuator	SN: BH9394 (20k)	09-Apr-21 (No. 217-03343)	Apr-22
Type-N mismatch combination	SN: 310982 / 06327	09-Apr-21 (No. 217-03344)	Apr-22
Reference Probe EX3DV4	SN: 7349	28-Dec-20 (No. EX3-7349_Dec20)	Dec-21
DAE4	SN: 601	02-Nov-20 (No. DAE4-601_Nov20)	Nov-21

Secondary Standards	ID #	Check Date (in house)	Scheduled Check
Power meter E4419B	SN: GB39512475	30-Oct-14 (in house check Oct-20)	In house check: Oct-22
Power sensor HP 8481A	SN: US37292783	07-Oct-15 (in house check Oct-20)	In house check: Oct-22
Power sensor HP 8481A	SN: MY41092317	07-Oct-15 (in house check Oct-20)	In house check: Oct-22
RF generator R&S SMT-06	SN: 100972	15-Jun-15 (in house check Oct-20)	In house check: Oct-22
Network Analyzer Agilent E8358A	SN: US41080477	31-Mar-14 (in house check Oct-20)	In house check: Oct-21

	Name	Function	Signature
Calibrated by:	Leif Klysner	Laboratory Technician	
Approved by:	Katja Pokovic	Technical Manager	

Issued: August 25, 2021

This calibration certificate shall not be reproduced except in full without written approval of the laboratory.

Glossary:

TSL	tissue simulating liquid
ConvF	sensitivity in TSL / NORM x,y,z
N/A	not applicable or not measured

Calibration is Performed According to the Following Standards:

a) IEC/IEEE 62209-1528, "Measurement Procedure For The Assessment Of Specific Absorption Rate Of Human Exposure To Radio Frequency Fields From Hand-Held And Body-Worn Wireless Communication Devices - Part 1528: Human Models, Instrumentation And Procedures (Frequency Range of 4 MHz to 10 GHz)", October 2020.
b) KDB 865664, "SAR Measurement Requirements for 100 MHz to 6 GHz"

Additional Documentation:

c) DASY System Handbook

Methods Applied and Interpretation of Parameters:

- *Measurement Conditions:* Further details are available from the Validation Report at the end of the certificate. All figures stated in the certificate are valid at the frequency indicated.
- *Antenna Parameters with TSL:* The source is mounted in a touch configuration below the center marking of the flat phantom.
- *Return Loss:* This parameter is measured with the source positioned under the liquid filled phantom (as described in the measurement condition clause). The Return Loss ensures low reflected power. No uncertainty required.
- *SAR measured:* SAR measured at the stated antenna input power.
- *SAR normalized:* SAR as measured, normalized to an input power of 1 W at the antenna connector.
- *SAR for nominal TSL parameters:* The measured TSL parameters are used to calculate the nominal SAR result.

The reported uncertainty of measurement is stated as the standard uncertainty of measurement multiplied by the coverage factor k=2, which for a normal distribution corresponds to a coverage probability of approximately 95%.

Measurement Conditions

DASY system configuration, as far as not given on page 1.

DASY Version	DASY52	V52.10.4
Extrapolation	Advanced Extrapolation	
Phantom	Modular Flat Phantom	
Distance Dipole Center - TSL	10 mm	with Spacer
Zoom Scan Resolution	dx, dy, dz = 5 mm	
Frequency	2600 MHz ± 1 MHz	

Head TSL parameters

The following parameters and calculations were applied.

	Temperature	**Permittivity**	**Conductivity**
Nominal Head TSL parameters	22.0 °C	39.0	1.96 mho/m
Measured Head TSL parameters	(22.0 ± 0.2) °C	37.4 ± 6 %	2.04 mho/m ± 6 %
Head TSL temperature change during test	< 0.5 °C	----	----

SAR result with Head TSL

SAR averaged over 1 cm^3 (1 g) of Head TSL	Condition	
SAR measured	250 mW input power	14.9 W/kg
SAR for nominal Head TSL parameters	normalized to 1W	**58.0 W/kg ± 17.0 % (k=2)**

SAR averaged over 10 cm^3 (10 g) of Head TSL	condition	
SAR measured	250 mW input power	6.56 W/kg
SAR for nominal Head TSL parameters	normalized to 1W	**25.8 W/kg ± 16.5 % (k=2)**

Appendix (Additional assessments outside the scope of SCS 0108)

Antenna Parameters with Head TSL

Impedance, transformed to feed point	49.2 Ω - 3.0 jΩ
Return Loss	- 30.0 dB

General Antenna Parameters and Design

Electrical Delay (one direction)	1.153 ns

After long term use with 100W radiated power, only a slight warming of the dipole near the feedpoint can be measured.

The dipole is made of standard semirigid coaxial cable. The center conductor of the feeding line is directly connected to the second arm of the dipole. The antenna is therefore short-circuited for DC-signals. On some of the dipoles, small end caps are added to the dipole arms in order to improve matching when loaded according to the position as explained in the "Measurement Conditions" paragraph. The SAR data are not affected by this change. The overall dipole length is still according to the Standard.
No excessive force must be applied to the dipole arms, because they might bend or the soldered connections near the feedpoint may be damaged.

Additional EUT Data

Manufactured by	SPEAG

DASY5 Validation Report for Head TSL

Date: 17.08.2021

Test Laboratory: SPEAG, Zurich, Switzerland

DUT: Dipole 2600 MHz; Type: D2600V2; Serial: D2600V2 - SN:1008

Communication System: UID 0 - CW; Frequency: 2600 MHz
Medium parameters used: f = 2600 MHz; σ = 2.04 S/m; ε_r = 37.4; ρ = 1000 kg/m^3
Phantom section: Flat Section
Measurement Standard: DASY5 (IEEE/IEC/ANSI C63.19-2011)

DASY52 Configuration:

- Probe: EX3DV4 - SN7349; ConvF(7.84, 7.84, 7.84) @ 2600 MHz; Calibrated: 28.12.2020
- Sensor-Surface: 1.4mm (Mechanical Surface Detection)
- Electronics: DAE4 Sn601; Calibrated: 02.11.2020
- Phantom: Flat Phantom 5.0 (front); Type: QD 000 P50 AA; Serial: 1001
- DASY52 52.10.4(1535); SEMCAD X 14.6.14(7501)

Dipole Calibration for Head Tissue/Pin=250 mW, d=10mm/Zoom Scan (7x7x7)/Cube 0:

Measurement grid: dx=5mm, dy=5mm, dz=5mm
Reference Value = 119.8 V/m; Power Drift = 0.08 dB
Peak SAR (extrapolated) = 29.9 W/kg
SAR(1 g) = 14.9 W/kg; SAR(10 g) = 6.56 W/kg
Smallest distance from peaks to all points 3 dB below = 9 mm
Ratio of SAR at M2 to SAR at M1 = 49.9%
Maximum value of SAR (measured) = 24.4 W/kg

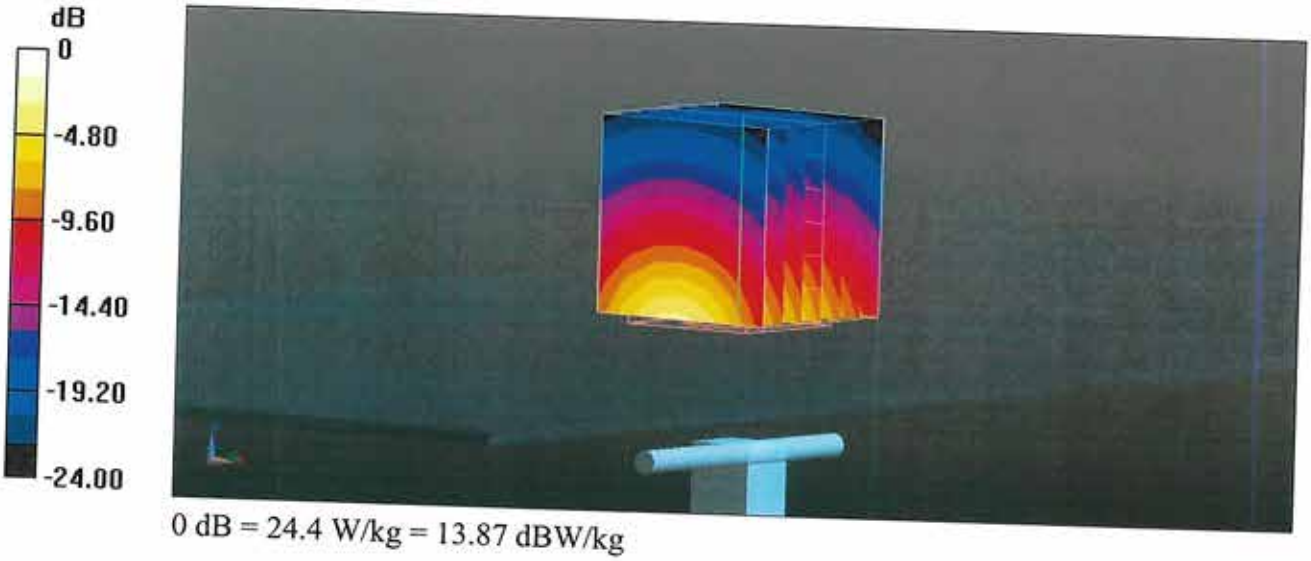

0 dB = 24.4 W/kg = 13.87 dBW/kg

Impedance Measurement Plot for Head TSL

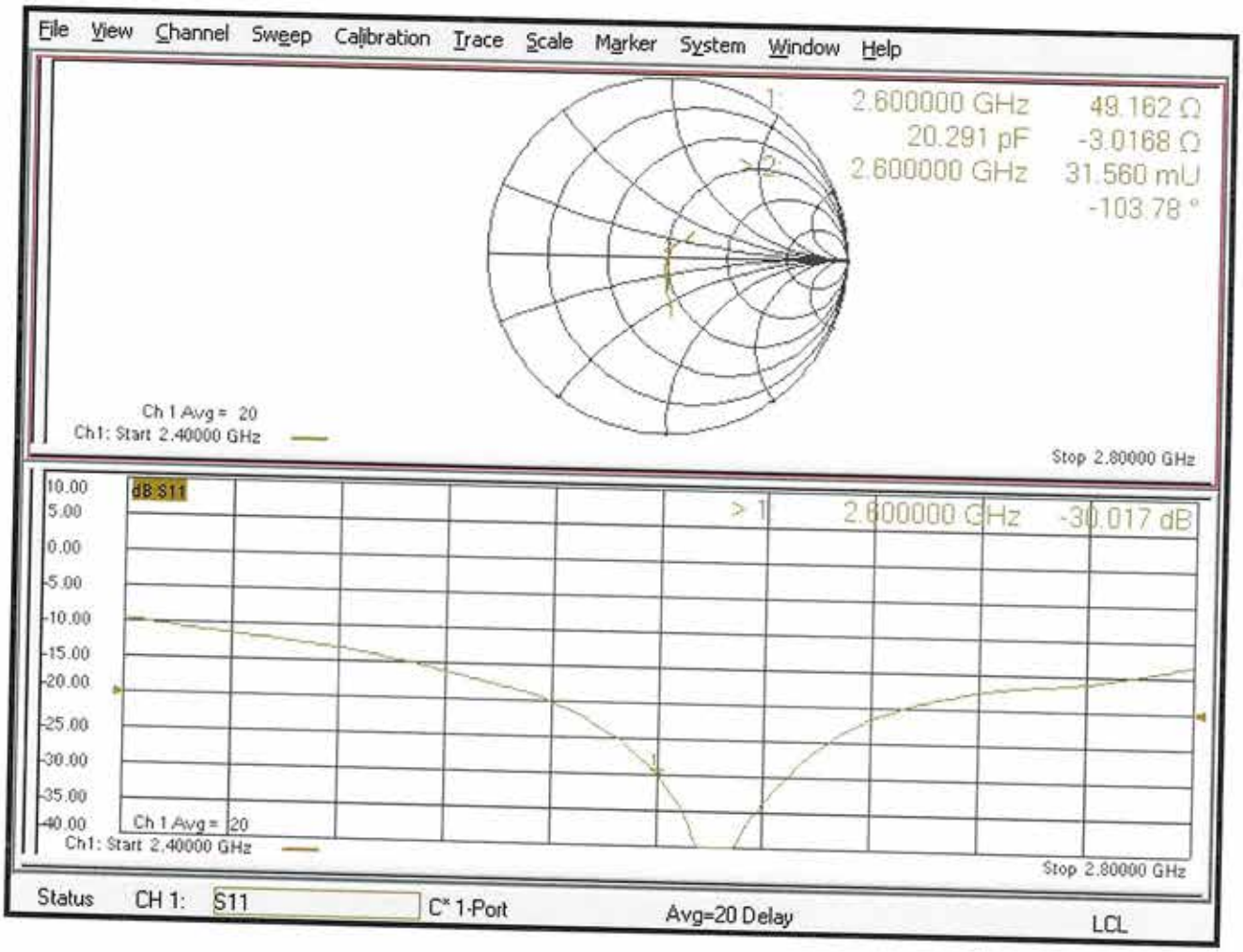

D2600V2, serial no. 1008 Extended Dipole Calibrations

Referring to KDB 865664, if dipoles are verified in return loss (<-20dB, within 20% of prior calibration), and in impedance (within 5 ohm of prior calibration), the annual calibration is not necessary and the calibration interval can be extended.

<Justification of the extended calibration>

D**2600**V2 – serial no. **1008**						
	2600MHZ					
Date of Measurement	Return-Loss (dB)	Delta (%)	Real Impedance (ohm)	Delta (ohm)	Imaginary Impedance (ohm)	Delta (ohm)
08.17.2021 (Cal. Report)	-30.017		49.162		-3.0168	
08.16.2022 (extended)	-25.072	-16.47	46.926	2.236	-5.6571	2.6403

The return loss is < -20dB, within 20% of prior calibration; the impedance is within 5 ohm of prior calibration. Therefore the verification result should support extended calibration.

<Dipole Verification Data> - D2600 V2, serial no. 1008 (Data of Measurement : 08.16.2022)

2600 MHz - Head

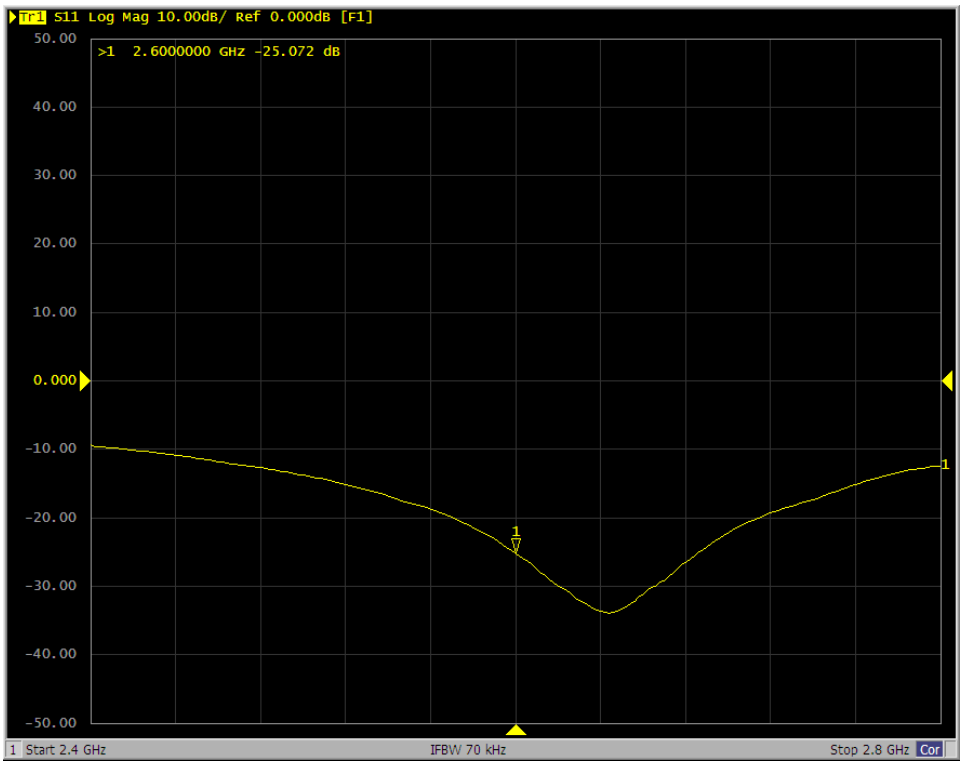

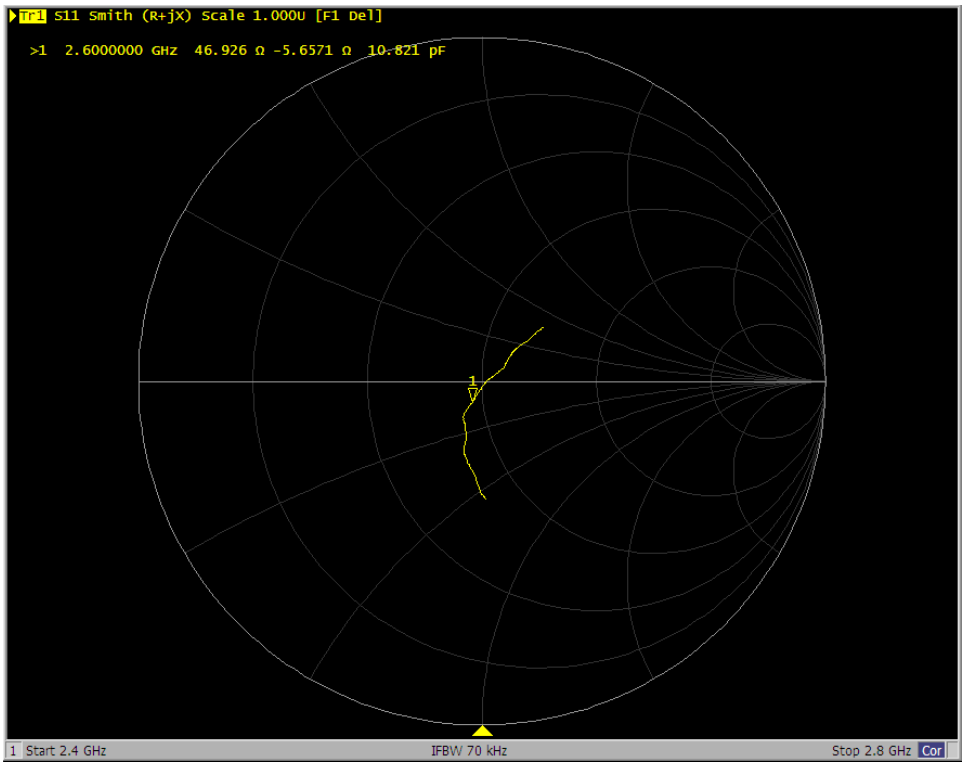

Calibration Laboratory of
Schmid & Partner
Engineering AG
Zeughausstrasse 43, 8004 Zurich, Switzerland

S Schweizerischer Kalibrierdienst
C Service suisse d'étalonnage
Servizio svizzero di taratura
S Swiss Calibration Service

Accredited by the Swiss Accreditation Service (SAS)
The Swiss Accreditation Service is one of the signatories to the EA Multilateral Agreement for the recognition of calibration certificates

Accreditation No.: SCS 0108

Client **Sporton**

Certificate No: D2600V2-1078_Jun22

CALIBRATION CERTIFICATE

Object	D2600V2 - SN:1078
Calibration procedure(s)	QA CAL-05.v11 Calibration Procedure for SAR Validation Sources between 0.7-3 GHz
Calibration date:	June 23, 2022

This calibration certificate documents the traceability to national standards, which realize the physical units of measurements (SI).
The measurements and the uncertainties with confidence probability are given on the following pages and are part of the certificate.

All calibrations have been conducted in the closed laboratory facility: environment temperature (22 ± 3)°C and humidity < 70%.

Calibration Equipment used (M&TE critical for calibration)

Primary Standards	ID #	Cal Date (Certificate No.)	Scheduled Calibration
Power meter NRP	SN: 104778	04-Apr-22 (No. 217-03525/03524)	Apr-23
Power sensor NRP-Z91	SN: 103244	04-Apr-22 (No. 217-03524)	Apr-23
Power sensor NRP-Z91	SN: 103245	04-Apr-22 (No. 217-03525)	Apr-23
Reference 20 dB Attenuator	SN: BH9394 (20k)	04-Apr-22 (No. 217-03527)	Apr-23
Type-N mismatch combination	SN: 310982 / 06327	04-Apr-22 (No. 217-03528)	Apr-23
Reference Probe EX3DV4	SN: 7349	31-Dec-21 (No. EX3-7349_Dec21)	Dec-22
DAE4	SN: 601	02-May-22 (No. DAE4-601_May22)	May-23

Secondary Standards	ID #	Check Date (in house)	Scheduled Check
Power meter E4419B	SN: GB39512475	30-Oct-14 (in house check Oct-20)	In house check: Oct-22
Power sensor HP 8481A	SN: US37292783	07-Oct-15 (in house check Oct-20)	In house check: Oct-22
Power sensor HP 8481A	SN: MY41093315	07-Oct-15 (in house check Oct-20)	In house check: Oct-22
RF generator R&S SMT-06	SN: 100972	15-Jun-15 (in house check Oct-20)	In house check: Oct-22
Network Analyzer Agilent E8358A	SN: US41080477	31-Mar-14 (in house check Oct-20)	In house check: Oct-22

	Name	Function	Signature
Calibrated by:	Joanna Lleshaj	Laboratory Technician	
Approved by:	Sven Kühn	Technical Manager	

Issued: June 24, 2022

This calibration certificate shall not be reproduced except in full without written approval of the laboratory.

Glossary:

TSL	tissue simulating liquid
ConvF	sensitivity in TSL / NORM x,y,z
N/A	not applicable or not measured

Calibration is Performed According to the Following Standards:

a) IEC/IEEE 62209-1528, "Measurement Procedure For The Assessment Of Specific Absorption Rate Of Human Exposure To Radio Frequency Fields From Hand-Held And Body-Worn Wireless Communication Devices - Part 1528: Human Models, Instrumentation And Procedures (Frequency Range of 4 MHz to 10 GHz)", October 2020.
b) KDB 865664, "SAR Measurement Requirements for 100 MHz to 6 GHz"

Additional Documentation:

c) DASY System Handbook

Methods Applied and Interpretation of Parameters:

- *Measurement Conditions:* Further details are available from the Validation Report at the end of the certificate. All figures stated in the certificate are valid at the frequency indicated.
- *Antenna Parameters with TSL:* The source is mounted in a touch configuration below the center marking of the flat phantom.
- *Return Loss:* This parameter is measured with the source positioned under the liquid filled phantom (as described in the measurement condition clause). The Return Loss ensures low reflected power. No uncertainty required.
- *SAR measured:* SAR measured at the stated antenna input power.
- *SAR normalized:* SAR as measured, normalized to an input power of 1 W at the antenna connector.
- *SAR for nominal TSL parameters:* The measured TSL parameters are used to calculate the nominal SAR result.

The reported uncertainty of measurement is stated as the standard uncertainty of measurement multiplied by the coverage factor k=2, which for a normal distribution corresponds to a coverage probability of approximately 95%.

Measurement Conditions

DASY system configuration, as far as not given on page 1.

DASY Version	DASY52	V52.10.4
Extrapolation	Advanced Extrapolation	
Phantom	Modular Flat Phantom	
Distance Dipole Center - TSL	10 mm	with Spacer
Zoom Scan Resolution	dx, dy, dz = 5 mm	
Frequency	2600 MHz ± 1 MHz	

Head TSL parameters

The following parameters and calculations were applied.

	Temperature	**Permittivity**	**Conductivity**
Nominal Head TSL parameters	22.0 °C	39.0	1.96 mho/m
Measured Head TSL parameters	(22.0 ± 0.2) °C	37.8 ± 6 %	2.01 mho/m ± 6 %
Head TSL temperature change during test	< 0.5 °C	----	----

SAR result with Head TSL

SAR averaged over 1 cm^3 (1 g) of Head TSL	Condition	
SAR measured	250 mW input power	14.1 W/kg
SAR for nominal Head TSL parameters	normalized to 1W	**55.4 W/kg ± 17.0 % (k=2)**

SAR averaged over 10 cm^3 (10 g) of Head TSL	condition	
SAR measured	250 mW input power	6.29 W/kg
SAR for nominal Head TSL parameters	normalized to 1W	**24.9 W/kg ± 16.5 % (k=2)**

Appendix (Additional assessments outside the scope of SCS 0108)

Antenna Parameters with Head TSL

Impedance, transformed to feed point	49.2 Ω - 7.3 jΩ
Return Loss	- 22.6 dB

General Antenna Parameters and Design

Electrical Delay (one direction)	1.153 ns

After long term use with 100W radiated power, only a slight warming of the dipole near the feedpoint can be measured.

The dipole is made of standard semirigid coaxial cable. The center conductor of the feeding line is directly connected to the second arm of the dipole. The antenna is therefore short-circuited for DC-signals. On some of the dipoles, small end caps are added to the dipole arms in order to improve matching when loaded according to the position as explained in the "Measurement Conditions" paragraph. The SAR data are not affected by this change. The overall dipole length is still according to the Standard.
No excessive force must be applied to the dipole arms, because they might bend or the soldered connections near the feedpoint may be damaged.

Additional EUT Data

Manufactured by	SPEAG

DASY5 Validation Report for Head TSL

Date: 23.06.2022

Test Laboratory: SPEAG, Zurich, Switzerland

DUT: Dipole 2600 MHz; Type: D2600V2; Serial: D2600V2 - SN:1078

Communication System: UID 0 - CW; Frequency: 2600 MHz
Medium parameters used: f = 2600 MHz; σ = 2.01 S/m; ε_r = 37.8; ρ = 1000 kg/m^3
Phantom section: Flat Section
Measurement Standard: DASY5 (IEEE/IEC/ANSI C63.19-2011)

DASY52 Configuration:

- Probe: EX3DV4 - SN7349; ConvF(7.84, 7.84, 7.84) @ 2600 MHz; Calibrated: 31.12.2021
- Sensor-Surface: 1.4mm (Mechanical Surface Detection)
- Electronics: DAE4 Sn601; Calibrated: 02.05.2022
- Phantom: Flat Phantom 5.0 (front); Type: QD 000 P50 AA; Serial: 1001
- DASY52 52.10.4(1535); SEMCAD X 14.6.14(7501)

Dipole Calibration for Head Tissue/Pin=250 mW, d=10mm/Zoom Scan (7x7x7)/Cube 0:

Measurement grid: dx=5mm, dy=5mm, dz=5mm
Reference Value = 117.7 V/m; Power Drift = 0.07 dB
Peak SAR (extrapolated) = 28.0 W/kg
SAR(1 g) = 14.1 W/kg; SAR(10 g) = 6.29 W/kg
Smallest distance from peaks to all points 3 dB below = 9 mm
Ratio of SAR at M2 to SAR at M1 = 50.5%
Maximum value of SAR (measured) = 23.5 W/kg

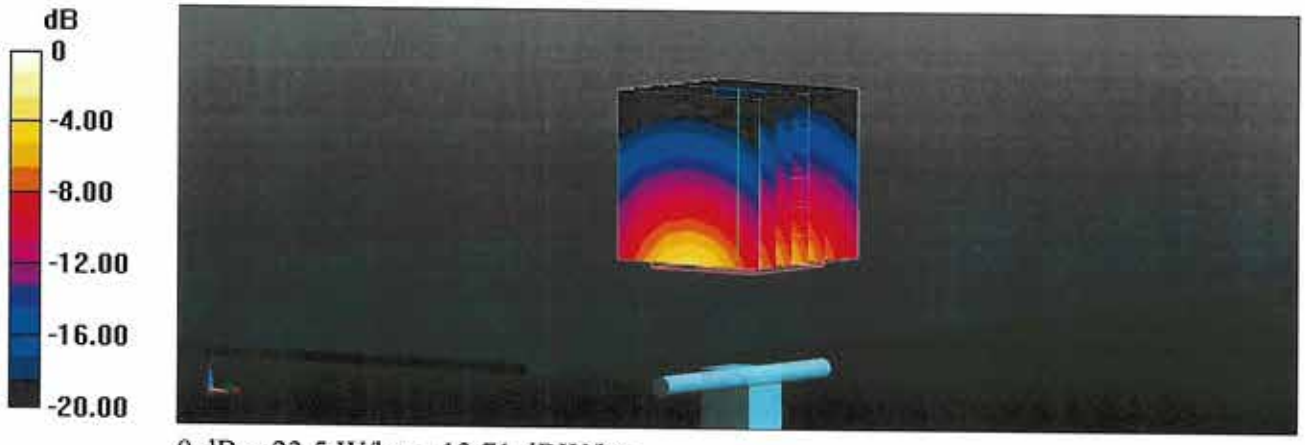

0 dB = 23.5 W/kg = 13.71 dBW/kg

Impedance Measurement Plot for Head TSL

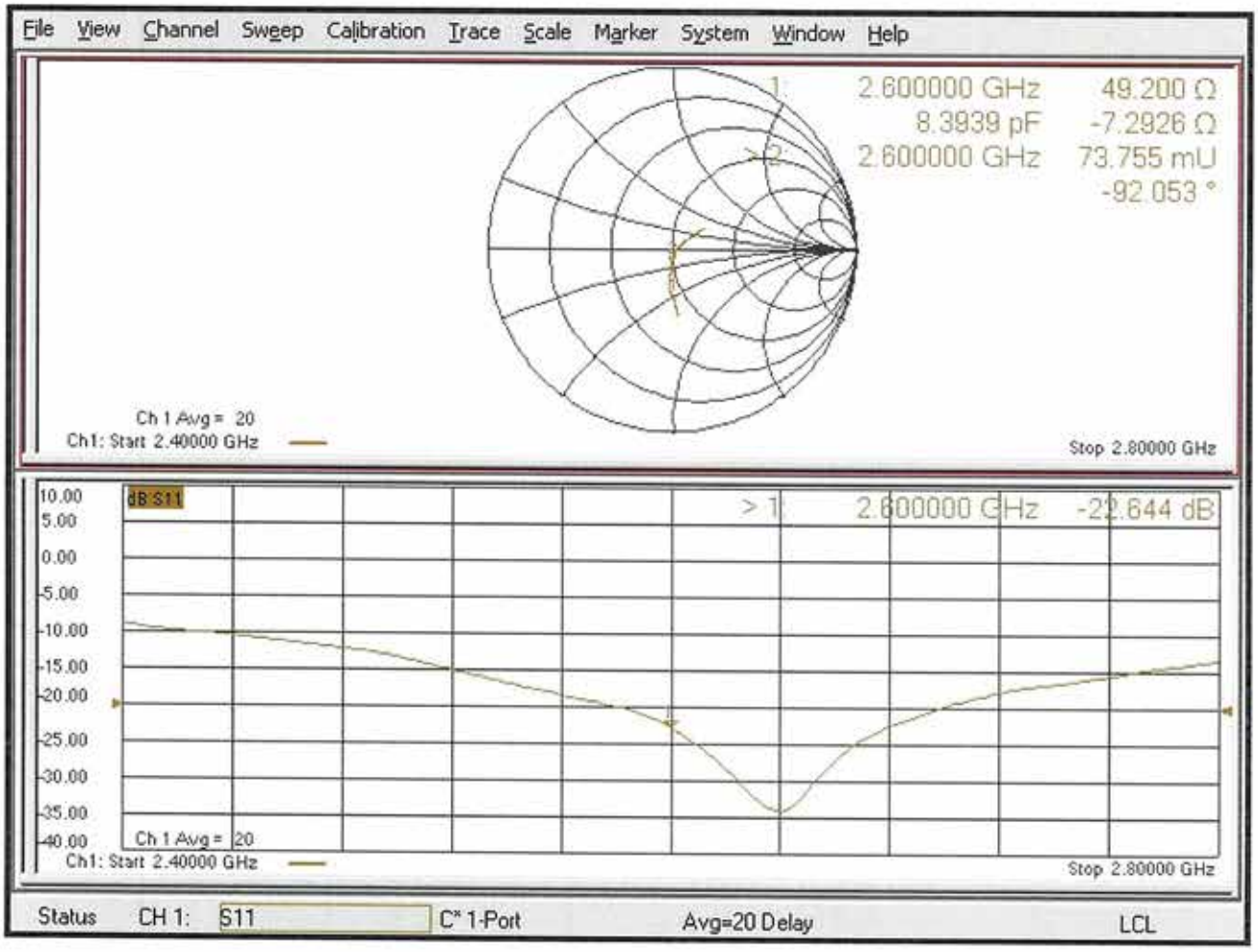

Calibration Laboratory of
Schmid & Partner
Engineering AG
Zeughausstrasse 43, 8004 Zurich, Switzerland

S Schweizerischer Kalibrierdienst
C Service suisse d'étalonnage
Servizio svizzero di taratura
S Swiss Calibration Service

Accredited by the Swiss Accreditation Service (SAS)
The Swiss Accreditation Service is one of the signatories to the EA Multilateral Agreement for the recognition of calibration certificates

Accreditation No.: SCS 0108

Client **Sporton**

Certificate No: D2600V2-1089_Mar22

CALIBRATION CERTIFICATE

Object	D2600V2 - SN:1089
Calibration procedure(s)	QA CAL-05.v11 Calibration Procedure for SAR Validation Sources between 0.7-3 GHz
Calibration date:	March 24, 2022

This calibration certificate documents the traceability to national standards, which realize the physical units of measurements (SI).
The measurements and the uncertainties with confidence probability are given on the following pages and are part of the certificate.

All calibrations have been conducted in the closed laboratory facility: environment temperature (22 ± 3)°C and humidity < 70%.

Calibration Equipment used (M&TE critical for calibration)

Primary Standards	ID #	Cal Date (Certificate No.)	Scheduled Calibration
Power meter NRP	SN: 104778	09-Apr-21 (No. 217-03291/03292)	Apr-22
Power sensor NRP-Z91	SN: 103244	09-Apr-21 (No. 217-03291)	Apr-22
Power sensor NRP-Z91	SN: 103245	09-Apr-21 (No. 217-03292)	Apr-22
Reference 20 dB Attenuator	SN: BH9394 (20k)	09-Apr-21 (No. 217-03343)	Apr-22
Type-N mismatch combination	SN: 310982 / 06327	09-Apr-21 (No. 217-03344)	Apr-22
Reference Probe EX3DV4	SN: 7349	31-Dec-21 (No. EX3-7349_Dec21)	Dec-22
DAE4	SN: 601	01-Nov-21 (No. DAE4-601_Nov21)	Nov-22

Secondary Standards	ID #	Check Date (in house)	Scheduled Check
Power meter E4419B	SN: GB39512475	30-Oct-14 (in house check Oct-20)	In house check: Oct-22
Power sensor HP 8481A	SN: US37292783	07-Oct-15 (in house check Oct-20)	In house check: Oct-22
Power sensor HP 8481A	SN: MY41093315	07-Oct-15 (in house check Oct-20)	In house check: Oct-22
RF generator R&S SMT-06	SN: 100972	15-Jun-15 (in house check Oct-20)	In house check: Oct-22
Network Analyzer Agilent E8358A	SN: US41080477	31-Mar-14 (in house check Oct-20)	In house check: Oct-22

	Name	Function	Signature
Calibrated by:	Aidonia Georgiadou	Laboratory Technician	
Approved by:	Niels Kuster	Quality Manager	

Issued: March 28, 2022

This calibration certificate shall not be reproduced except in full without written approval of the laboratory.

Glossary:

TSL	tissue simulating liquid
ConvF	sensitivity in TSL / NORM x,y,z
N/A	not applicable or not measured

Calibration is Performed According to the Following Standards:

a) IEC/IEEE 62209-1528, "Measurement Procedure For The Assessment Of Specific Absorption Rate Of Human Exposure To Radio Frequency Fields From Hand-Held And Body-Worn Wireless Communication Devices - Part 1528: Human Models, Instrumentation And Procedures (Frequency Range of 4 MHz to 10 GHz)", October 2020.
b) KDB 865664, "SAR Measurement Requirements for 100 MHz to 6 GHz"

Additional Documentation:

c) DASY System Handbook

Methods Applied and Interpretation of Parameters:

- *Measurement Conditions:* Further details are available from the Validation Report at the end of the certificate. All figures stated in the certificate are valid at the frequency indicated.
- *Antenna Parameters with TSL:* The source is mounted in a touch configuration below the center marking of the flat phantom.
- *Return Loss:* This parameter is measured with the source positioned under the liquid filled phantom (as described in the measurement condition clause). The Return Loss ensures low reflected power. No uncertainty required.
- *SAR measured:* SAR measured at the stated antenna input power.
- *SAR normalized:* SAR as measured, normalized to an input power of 1 W at the antenna connector.
- *SAR for nominal TSL parameters:* The measured TSL parameters are used to calculate the nominal SAR result.

The reported uncertainty of measurement is stated as the standard uncertainty of measurement multiplied by the coverage factor k=2, which for a normal distribution corresponds to a coverage probability of approximately 95%.

Measurement Conditions

DASY system configuration, as far as not given on page 1.

DASY Version	DASY52	V52.10.4
Extrapolation	Advanced Extrapolation	
Phantom	Modular Flat Phantom	
Distance Dipole Center - TSL	10 mm	with Spacer
Zoom Scan Resolution	dx, dy, dz = 5 mm	
Frequency	2600 MHz ± 1 MHz	

Head TSL parameters

The following parameters and calculations were applied.

	Temperature	**Permittivity**	**Conductivity**
Nominal Head TSL parameters	22.0 °C	39.0	1.96 mho/m
Measured Head TSL parameters	(22.0 ± 0.2) °C	37.2 ± 6 %	2.02 mho/m ± 6 %
Head TSL temperature change during test	< 0.5 °C	----	----

SAR result with Head TSL

SAR averaged over 1 cm³ (1 g) of Head TSL	Condition	
SAR measured	250 mW input power	14.2 W/kg
SAR for nominal Head TSL parameters	normalized to 1W	**55.4 W/kg ± 17.0 % (k=2)**

SAR averaged over 10 cm³ (10 g) of Head TSL	condition	
SAR measured	250 mW input power	6.24 W/kg
SAR for nominal Head TSL parameters	normalized to 1W	**24.6 W/kg ± 16.5 % (k=2)**

Appendix (Additional assessments outside the scope of SCS 0108)

Antenna Parameters with Head TSL

Impedance, transformed to feed point	50.0 Ω - 5.9 jΩ
Return Loss	- 24.6 dB

General Antenna Parameters and Design

Electrical Delay (one direction)	1.146 ns

After long term use with 100W radiated power, only a slight warming of the dipole near the feedpoint can be measured.

The dipole is made of standard semirigid coaxial cable. The center conductor of the feeding line is directly connected to the second arm of the dipole. The antenna is therefore short-circuited for DC-signals. On some of the dipoles, small end caps are added to the dipole arms in order to improve matching when loaded according to the position as explained in the "Measurement Conditions" paragraph. The SAR data are not affected by this change. The overall dipole length is still according to the Standard.
No excessive force must be applied to the dipole arms, because they might bend or the soldered connections near the feedpoint may be damaged.

Additional EUT Data

Manufactured by	SPEAG

DASY5 Validation Report for Head TSL

Date: 24.03.2022

Test Laboratory: SPEAG, Zurich, Switzerland

DUT: Dipole 2600 MHz; Type: D2600V2; Serial: D2600V2 - SN:1089

Communication System: UID 0 - CW; Frequency: 2600 MHz
Medium parameters used: f = 2600 MHz; σ = 2.02 S/m; ε_r = 37.2; ρ = 1000 kg/m^3
Phantom section: Flat Section
Measurement Standard: DASY5 (IEEE/IEC/ANSI C63.19-2011)

DASY52 Configuration:

- Probe: EX3DV4 - SN7349; ConvF(7.84, 7.84, 7.84) @ 2600 MHz; Calibrated: 31.12.2021
- Sensor-Surface: 1.4mm (Mechanical Surface Detection)
- Electronics: DAE4 Sn601; Calibrated: 01.11.2021
- Phantom: Flat Phantom 5.0 (front); Type: QD 000 P50 AA; Serial: 1001
- DASY52 52.10.4(1535); SEMCAD X 14.6.14(7501)

Dipole Calibration for Head Tissue/Pin=250 mW, d=10mm/Zoom Scan (7x7x7)/Cube 0:

Measurement grid: dx=5mm, dy=5mm, dz=5mm
Reference Value = 118.0 V/m; Power Drift = 0.08 dB
Peak SAR (extrapolated) = 28.8 W/kg
SAR(1 g) = 14.2 W/kg; SAR(10 g) = 6.24 W/kg
Smallest distance from peaks to all points 3 dB below = 9 mm
Ratio of SAR at M2 to SAR at M1 = 49.3%
Maximum value of SAR (measured) = 23.8 W/kg

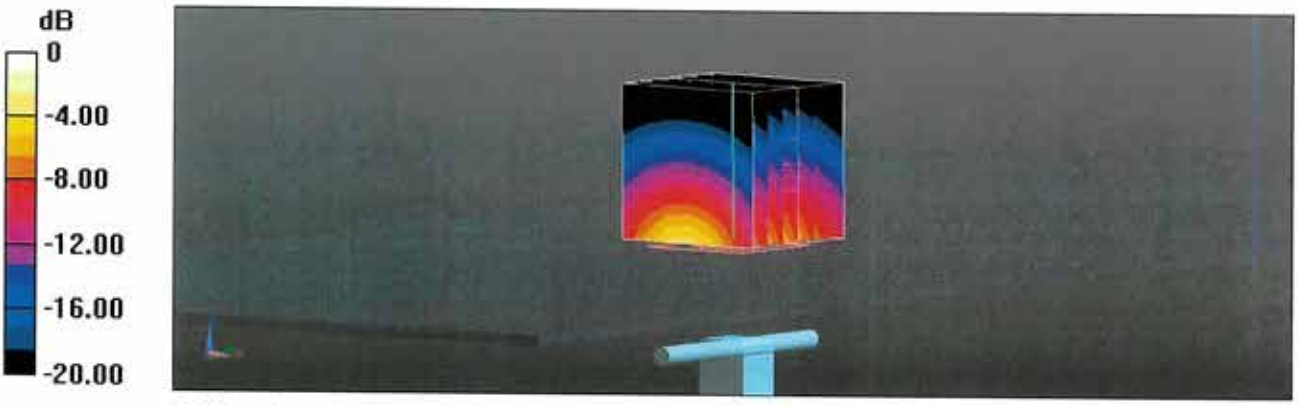

0 dB = 23.8 W/kg = 13.76 dBW/kg

Impedance Measurement Plot for Head TSL

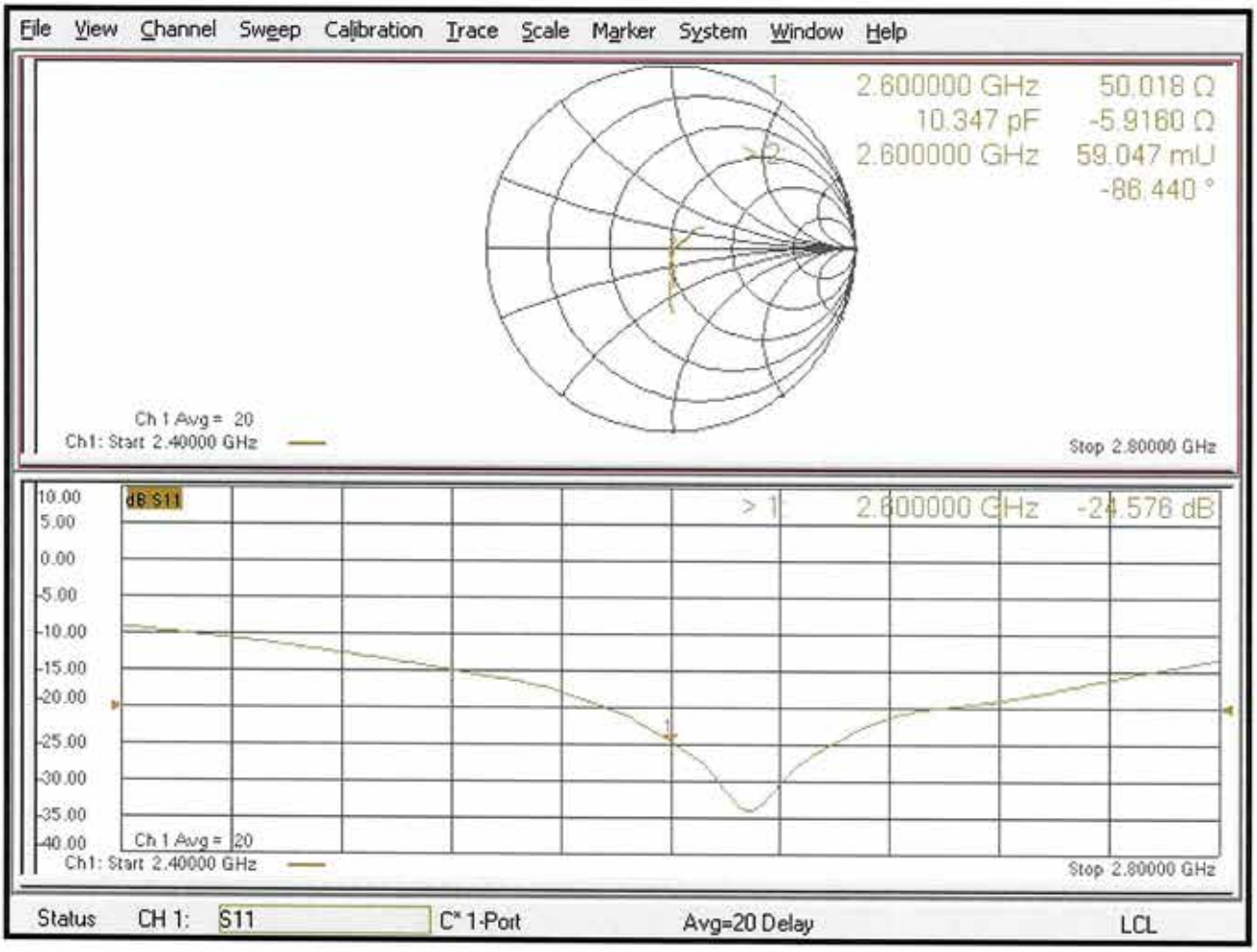

Calibration Laboratory of
Schmid & Partner
Engineering AG
Zeughausstrasse 43, 8004 Zurich, Switzerland

S Schweizerischer Kalibrierdienst
C Service suisse d'étalonnage
Servizio svizzero di taratura
S Swiss Calibration Service

Accredited by the Swiss Accreditation Service (SAS)
The Swiss Accreditation Service is one of the signatories to the EA Multilateral Agreement for the recognition of calibration certificates

Accreditation No.: SCS 0108

Client **Sporton**

Certificate No: D3500V2-1036_Mar22

CALIBRATION CERTIFICATE

Object	D3500V2 - SN:1036
Calibration procedure(s)	QA CAL-22.v6 Calibration Procedure for SAR Validation Sources between 3-10 GHz
Calibration date:	March 23, 2022

This calibration certificate documents the traceability to national standards, which realize the physical units of measurements (SI).
The measurements and the uncertainties with confidence probability are given on the following pages and are part of the certificate.

All calibrations have been conducted in the closed laboratory facility: environment temperature (22 ± 3)°C and humidity < 70%.

Calibration Equipment used (M&TE critical for calibration)

Primary Standards	ID #	Cal Date (Certificate No.)	Scheduled Calibration
Power meter NRP	SN: 104778	09-Apr-21 (No. 217-03291/03292)	Apr-22
Power sensor NRP-Z91	SN: 103244	09-Apr-21 (No. 217-03291)	Apr-22
Power sensor NRP-Z91	SN: 103245	09-Apr-21 (No. 217-03292)	Apr-22
Reference 20 dB Attenuator	SN: BH9394 (20k)	09-Apr-21 (No. 217-03343)	Apr-22
Type-N mismatch combination	SN: 310982 / 06327	09-Apr-21 (No. 217-03344)	Apr-22
Reference Probe EX3DV4	SN: 3503	08-Mar-22 (No. EX3-3503_Mar22)	Mar-23
DAE4	SN: 601	01-Nov-21 (No. DAE4-601_Nov21)	Nov-22

Secondary Standards	ID #	Check Date (in house)	Scheduled Check
Power meter E4419B	SN: GB39512475	30-Oct-14 (in house check Oct-20)	In house check: Oct-22
Power sensor HP 8481A	SN: US37292783	07-Oct-15 (in house check Oct-20)	In house check: Oct-22
Power sensor HP 8481A	SN: MY41093315	07-Oct-15 (in house check Oct-20)	In house check: Oct-22
RF generator R&S SMT-06	SN: 100972	15-Jun-15 (in house check Oct-20)	In house check: Oct-22
Network Analyzer Agilent E8358A	SN: US41080477	31-Mar-14 (in house check Oct-20)	In house check: Oct-22

	Name	Function	Signature
Calibrated by:	Michael Weber	Laboratory Technician	
Approved by:	Sven Kühn	Deputy Manager	

Issued: March 28, 2022

This calibration certificate shall not be reproduced except in full without written approval of the laboratory.

Glossary:

TSL	tissue simulating liquid
ConvF	sensitivity in TSL / NORM x,y,z
N/A	not applicable or not measured

Calibration is Performed According to the Following Standards:

a) IEC/IEEE 62209-1528, "Measurement Procedure For The Assessment Of Specific Absorption Rate Of Human Exposure To Radio Frequency Fields From Hand-Held And Body-Worn Wireless Communication Devices - Part 1528: Human Models, Instrumentation And Procedures (Frequency Range of 4 MHz to 10 GHz)", October 2020.
b) KDB 865664, "SAR Measurement Requirements for 100 MHz to 6 GHz"

Additional Documentation:

c) DASY System Handbook

Methods Applied and Interpretation of Parameters:

- *Measurement Conditions:* Further details are available from the Validation Report at the end of the certificate. All figures stated in the certificate are valid at the frequency indicated.
- *Antenna Parameters with TSL:* The source is mounted in a touch configuration below the center marking of the flat phantom.
- *Return Loss:* This parameter is measured with the source positioned under the liquid filled phantom (as described in the measurement condition clause). The Return Loss ensures low reflected power. No uncertainty required.
- *SAR measured:* SAR measured at the stated antenna input power.
- *SAR normalized:* SAR as measured, normalized to an input power of 1 W at the antenna connector.
- *SAR for nominal TSL parameters:* The measured TSL parameters are used to calculate the nominal SAR result.

The reported uncertainty of measurement is stated as the standard uncertainty of measurement multiplied by the coverage factor k=2, which for a normal distribution corresponds to a coverage probability of approximately 95%.