Test Laboratory: Sporton International Inc. SAR/HAC Testing Lab Date: 2025/2/27

System Check_Head_750MHz

DUT: D750V3-1107

Communication System: UID 0, CW; Frequency: 750 MHz
Medium: HSL_750_250227 Medium parameters used: f = 750 MHz; σ = 0.888 S/m; ε_r = 41.678; ρ = 1000 kg/m^3
Ambient Temperature：23.5 ℃; Liquid Temperature：22.5 ℃

DASY5 Configuration:
- Probe: EX3DV4 - SN3931; ConvF(9.46, 9.11, 8.98) @ 750 MHz; Calibrated: 2024/11/19
- Sensor-Surface: 1.4mm (Mechanical Surface Detection)
- Electronics: DAE4 Sn703; Calibrated: 2024/4/22
- Phantom: SAM_Left; Type: QD000P40CD; Serial: TP:1684
- Measurement SW: DASY52, Version 52.10 (4);SEMCAD X Version 14.6.14 (7501)

Pin=50mW/Area Scan (61x61x1): Interpolated grid: dx=1.500 mm, dy=1.500 mm
Maximum value of SAR (interpolated) = 0.589 W/kg

Pin=50mW/Zoom Scan (5x5x7)/Cube 0: Measurement grid: dx=8mm, dy=8mm, dz=5mm
Reference Value = 28.19 V/m; Power Drift = -0.12 dB
Peak SAR (extrapolated) = 0.623 W/kg
SAR(1 g) = 0.430 W/kg; SAR(10 g) = 0.287 W/kg
Smallest distance from peaks to all points 3 dB below = 17.9 mm
Ratio of SAR at M2 to SAR at M1 = 68.6%
Maximum value of SAR (measured) = 0.564 W/kg

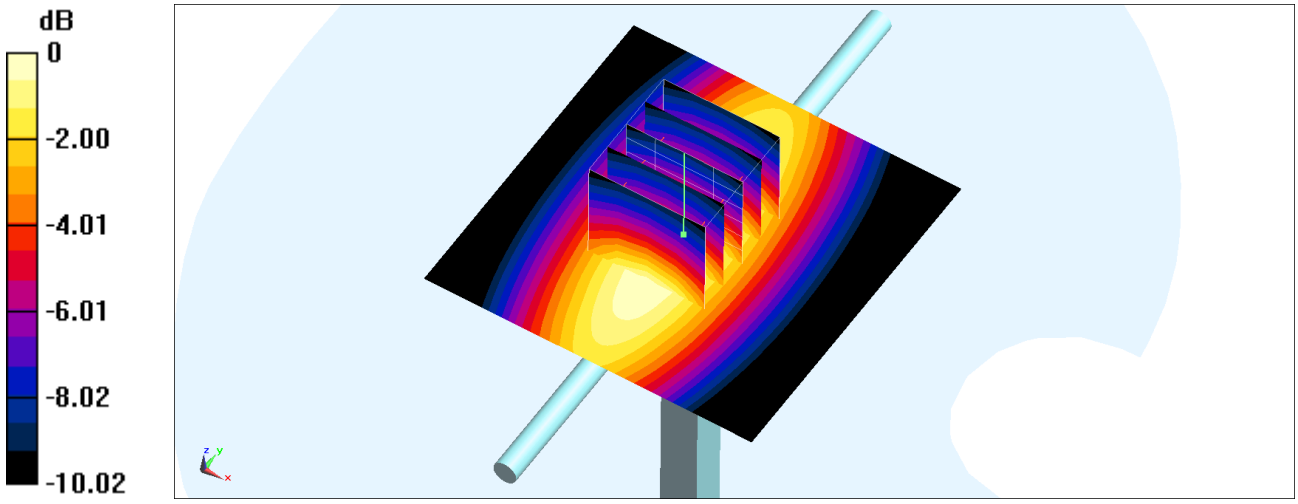

0 dB = 0.564 W/kg = -2.49 dBW/kg

Test Laboratory: Sporton International Inc. SAR/HAC Testing Lab Date: 2025/3/7

System Check_Head_750MHz

DUT: D750V3-1107

Communication System: UID 0, CW; Frequency: 750 MHz
Medium: HSL_750_250307 Medium parameters used: f = 750 MHz; σ = 0.873 S/m; ε_r = 42.636; ρ = 1000 kg/m^3
Ambient Temperature：23.5 ℃; Liquid Temperature：22.5 ℃

DASY5 Configuration:
- Probe: EX3DV4 - SN7791; ConvF(8.64, 9.72, 8.68) @ 750 MHz; Calibrated: 2025/2/19
- Sensor-Surface: 1.4mm (Mechanical Surface Detection)
- Electronics: DAE4 Sn1776; Calibrated: 2025/2/12
- Phantom: SAM_Left; Type: QD000P40CD; Serial: TP:1684
- Measurement SW: DASY52, Version 52.10 (4);SEMCAD X Version 14.6.14 (7501)

Pin=50mW/Area Scan (61x61x1): Interpolated grid: dx=1.500 mm, dy=1.500 mm
Maximum value of SAR (interpolated) = 0.513 W/kg

Pin=50mW/Zoom Scan (5x5x7)/Cube 0: Measurement grid: dx=8mm, dy=8mm, dz=5mm
Reference Value = 25.59 V/m; Power Drift = 0.04 dB
Peak SAR (extrapolated) = 0.564 W/kg
SAR(1 g) = 0.393 W/kg; SAR(10 g) = 0.265 W/kg
Smallest distance from peaks to all points 3 dB below = 16 mm
Ratio of SAR at M2 to SAR at M1 = 69.3%
Maximum value of SAR (measured) = 0.511 W/kg

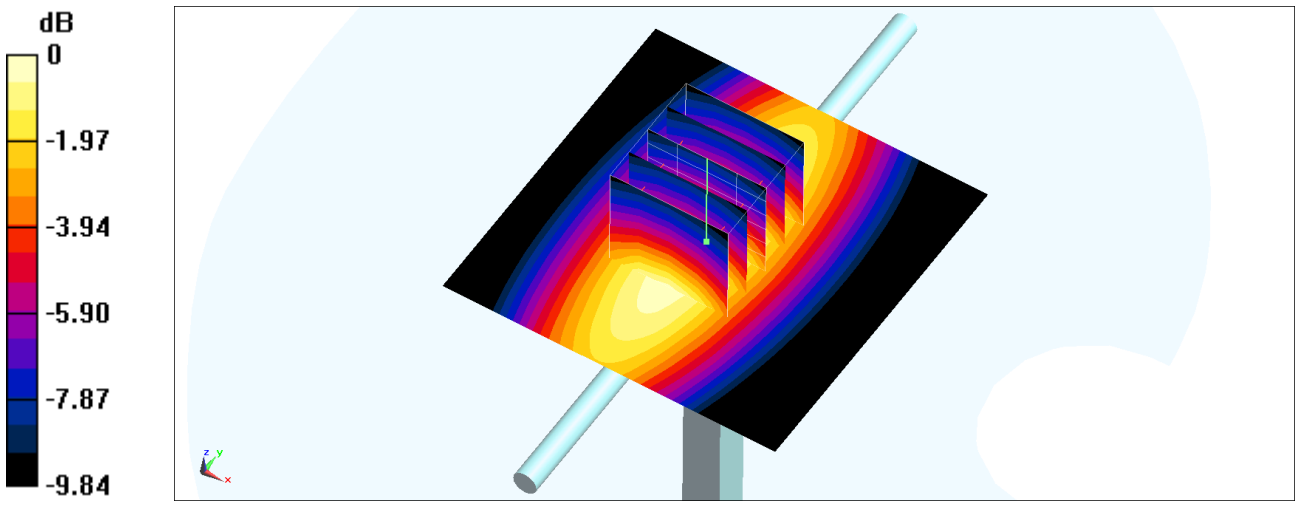

0 dB = 0.511 W/kg = -2.92 dBW/kg

Test Laboratory: Sporton International Inc. SAR/HAC Testing Lab Date: 2025/2/27

System Check_Head_835MHz

DUT: D835V2-4d167

Communication System: UID 0, CW; Frequency: 835 MHz
Medium: HSL_850_250227 Medium parameters used: f = 835 MHz; σ = 0.922 S/m; ε_r = 41.382; ρ = 1000 kg/m^3
Ambient Temperature：23.5 ℃; Liquid Temperature：22.5 ℃

DASY5 Configuration:
- Probe: EX3DV4 - SN3931; ConvF(9.11, 8.77, 8.65) @ 835 MHz; Calibrated: 2024/11/19
- Sensor-Surface: 1.4mm (Mechanical Surface Detection)
- Electronics: DAE4 Sn703; Calibrated: 2024/4/22
- Phantom: SAM_Left; Type: QD000P40CD; Serial: TP:1684
- Measurement SW: DASY52, Version 52.10 (4);SEMCAD X Version 14.6.14 (7501)

Pin=50mW/Area Scan (61x61x1): Interpolated grid: dx=1.500 mm, dy=1.500 mm
Maximum value of SAR (interpolated) = 0.720 W/kg

Pin=50mW/Zoom Scan (5x5x7)/Cube 0: Measurement grid: dx=8mm, dy=8mm, dz=5mm
Reference Value = 30.36 V/m; Power Drift = -0.05 dB
Peak SAR (extrapolated) = 0.730 W/kg
SAR(1 g) = 0.497 W/kg; SAR(10 g) = 0.334 W/kg
Smallest distance from peaks to all points 3 dB below = 19.5 mm
Ratio of SAR at M2 to SAR at M1 = 67.8%
Maximum value of SAR (measured) = 0.650 W/kg

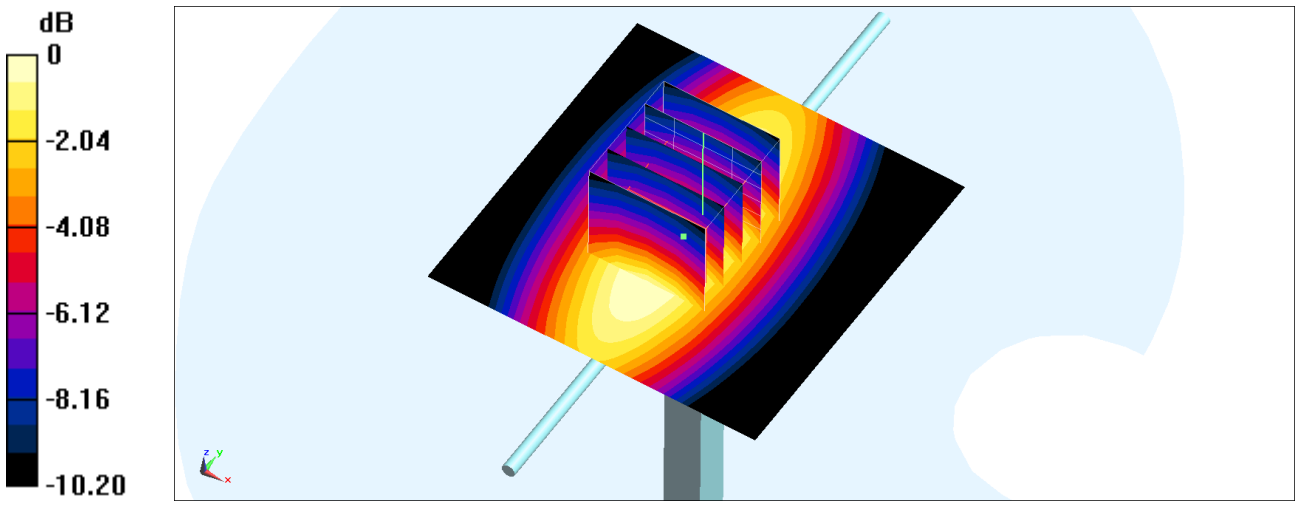

0 dB = 0.650 W/kg = -1.87 dBW/kg

Test Laboratory: Sporton International Inc. SAR/HAC Testing Lab Date: 2025/3/7

System Check_Head_835MHz

DUT: D835V2-4d167

Communication System: UID 0, CW; Frequency: 835 MHz
Medium: HSL_850_250307 Medium parameters used: f = 835 MHz; σ = 0.905 S/m; ε_r = 42.34; ρ = 1000 kg/m^3
Ambient Temperature：23.5 ℃; Liquid Temperature：22.5 ℃

DASY5 Configuration:
- Probe: EX3DV4 - SN7791; ConvF(8.43, 9.48, 8.47) @ 835 MHz; Calibrated: 2025/2/19
- Sensor-Surface: 1.4mm (Mechanical Surface Detection)
- Electronics: DAE4 Sn1776; Calibrated: 2025/2/12
- Phantom: SAM_Left; Type: QD000P40CD; Serial: TP:1684
- Measurement SW: DASY52, Version 52.10 (4);SEMCAD X Version 14.6.14 (7501)

Pin=50mW/Area Scan (61x61x1): Interpolated grid: dx=1.500 mm, dy=1.500 mm
Maximum value of SAR (interpolated) = 0.632 W/kg

Pin=50mW/Zoom Scan (5x5x7)/Cube 0: Measurement grid: dx=8mm, dy=8mm, dz=5mm
Reference Value = 28.00 V/m; Power Drift = 0.06 dB
Peak SAR (extrapolated) = 0.701 W/kg
SAR(1 g) = 0.485 W/kg; SAR(10 g) = 0.323 W/kg
Smallest distance from peaks to all points 3 dB below = 16 mm
Ratio of SAR at M2 to SAR at M1 = 68.8%
Maximum value of SAR (measured) = 0.635 W/kg

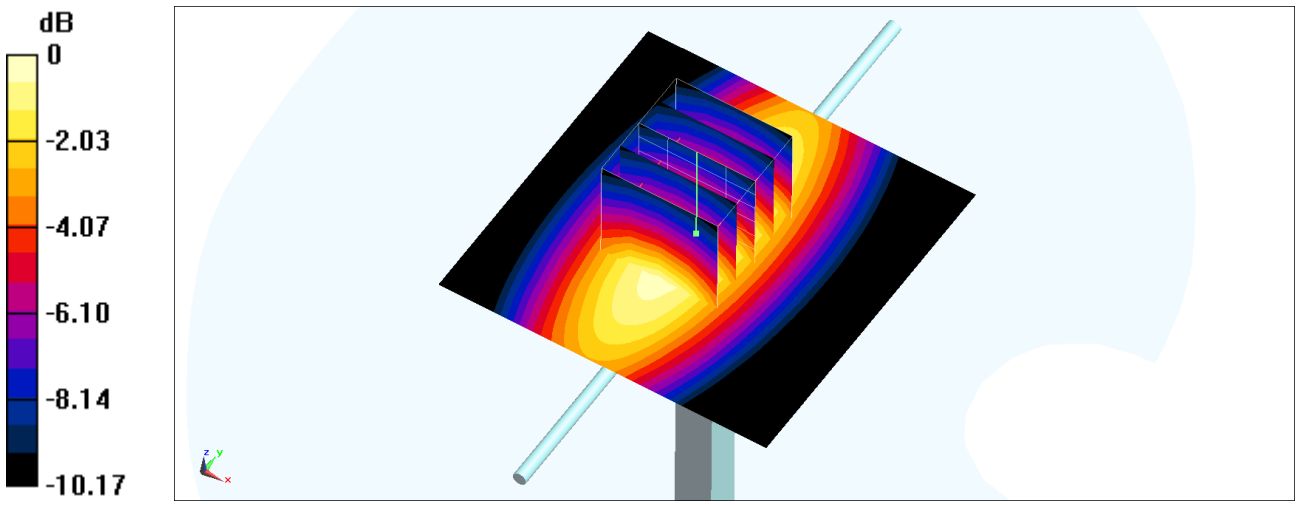

0 dB = 0.635 W/kg = -1.97 dBW/kg

Test Laboratory: Sporton International Inc. SAR/HAC Testing Lab Date: 2025/3/13

System Check_Head_1640MHz

DUT: D1640V2-346

Communication System: UID 0, CW; Frequency: 1640 MHz
Medium: HSL_1640_250313 Medium parameters used: f = 1640 MHz; σ = 1.292 S/m; ε_r = 40.173; ρ = 1000 kg/m^3
Ambient Temperature：23.6 ℃; Liquid Temperature：22.6 ℃

DASY5 Configuration:
- Probe: EX3DV4 - SN7785; ConvF(6.85, 7.21, 7.06) @ 1640 MHz; Calibrated: 2024/11/28
- Sensor-Surface: 1.4mm (Mechanical Surface Detection)
- Electronics: DAE4 Sn1694; Calibrated: 2024/11/19
- Phantom: SAM_Left; Type: QD000P40CD; Serial: TP:1684
- Measurement SW: DASY52, Version 52.10 (4);SEMCAD X Version 14.6.14 (7501)

Pin=50mW/Area Scan (51x51x1): Interpolated grid: dx=1.500 mm, dy=1.500 mm
Maximum value of SAR (interpolated) = 2.44 W/kg

Pin=50mW/Zoom Scan (5x5x7)/Cube 0: Measurement grid: dx=8mm, dy=8mm, dz=5mm
Reference Value = 44.58 V/m; Power Drift = 0.13 dB
Peak SAR (extrapolated) = 2.73 W/kg
SAR(1 g) = 1.63 W/kg; SAR(10 g) = 0.898 W/kg
Smallest distance from peaks to all points 3 dB below = 10.7 mm
Ratio of SAR at M2 to SAR at M1 = 59.3%
Maximum value of SAR (measured) = 2.41 W/kg

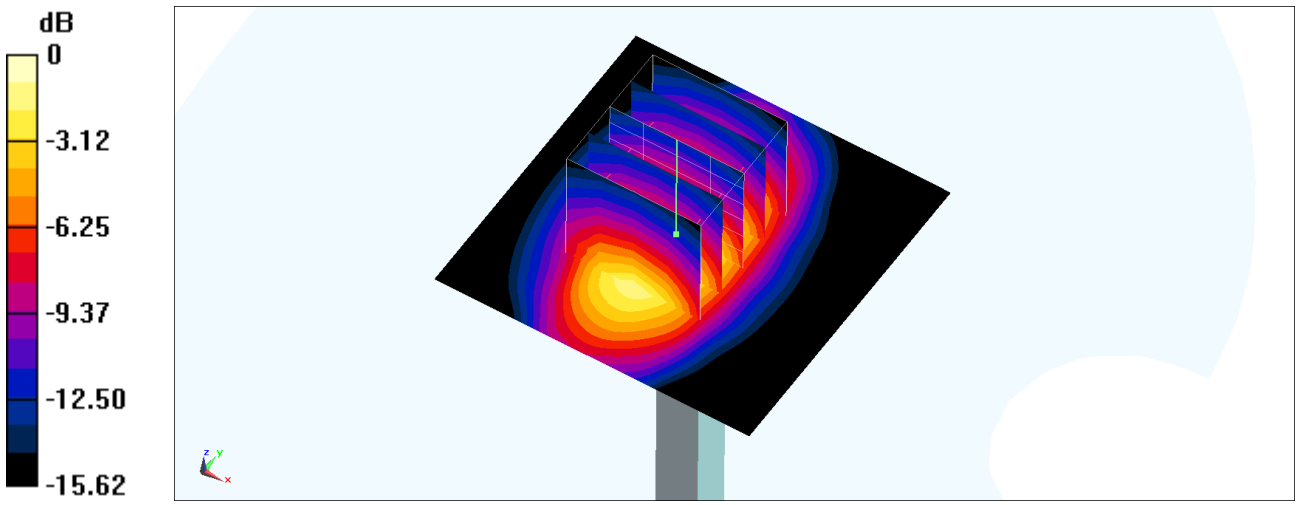

0 dB = 2.41 W/kg = 3.82 dBW/kg

Test Laboratory: Sporton International Inc. SAR/HAC Testing Lab Date: 2025/2/27

System Check_Head_1750MHz

DUT: D1750V2-1112

Communication System: UID 0, CW; Frequency: 1750 MHz
Medium: HSL_1750_250227 Medium parameters used: f = 1750 MHz; σ = 1.353 S/m; ε_r = 40.703; ρ = 1000 kg/m^3
Ambient Temperature：23.5 ℃; Liquid Temperature：22.5 ℃

DASY5 Configuration:
- Probe: EX3DV4 - SN3931; ConvF(7.9, 7.61, 7.5) @ 1750 MHz; Calibrated: 2024/11/19
- Sensor-Surface: 1.4mm (Mechanical Surface Detection)
- Electronics: DAE4 Sn703; Calibrated: 2024/4/22
- Phantom: SAM_Left; Type: QD000P40CD; Serial: TP:1684
- Measurement SW: DASY52, Version 52.10 (4);SEMCAD X Version 14.6.14 (7501)

Pin=50mW/Area Scan (61x61x1): Interpolated grid: dx=1.500 mm, dy=1.500 mm
Maximum value of SAR (interpolated) = 2.76 W/kg

Pin=50mW/Zoom Scan (5x5x7)/Cube 0: Measurement grid: dx=8mm, dy=8mm, dz=5mm
Reference Value = 45.82 V/m; Power Drift = 0.11 dB
Peak SAR (extrapolated) = 3.19 W/kg
SAR(1 g) = 1.86 W/kg; SAR(10 g) = 1.01 W/kg
Smallest distance from peaks to all points 3 dB below = 9.6 mm
Ratio of SAR at M2 to SAR at M1 = 58%
Maximum value of SAR (measured) = 2.77 W/kg

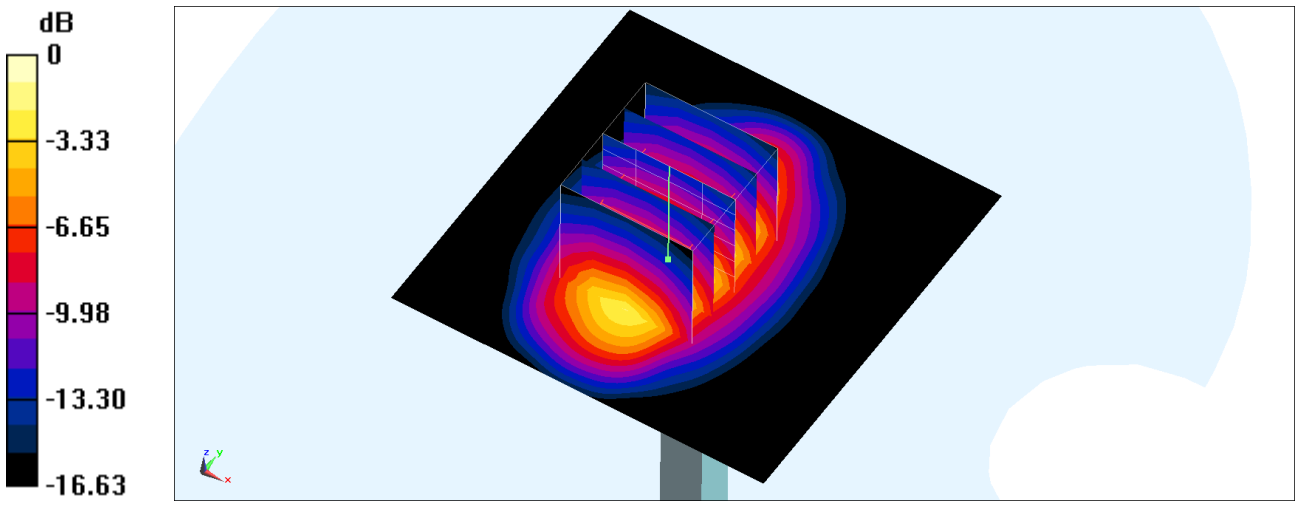

0 dB = 2.77 W/kg = 4.42 dBW/kg

Test Laboratory: Sporton International Inc. SAR/HAC Testing Lab Date: 2025/3/7

System Check_Head_1750MHz

DUT: D1750V2-1068

Communication System: UID 0, CW; Frequency: 1750 MHz
Medium: HSL_1750_250307 Medium parameters used: f = 1750 MHz; σ = 1.368 S/m; ε_r = 40.637; ρ = 1000 kg/m^3
Ambient Temperature：23.5 ℃; Liquid Temperature：22.5 ℃

DASY5 Configuration:
- Probe: EX3DV4 - SN7791; ConvF(7.08, 7.96, 7.11) @ 1750 MHz; Calibrated: 2025/2/19
- Sensor-Surface: 1.4mm (Mechanical Surface Detection)
- Electronics: DAE4 Sn1776; Calibrated: 2025/2/12
- Phantom: SAM_Left; Type: QD000P40CD; Serial: TP:1684
- Measurement SW: DASY52, Version 52.10 (4);SEMCAD X Version 14.6.14 (7501)

Pin=50mW/Area Scan (61x61x1): Interpolated grid: dx=1.500 mm, dy=1.500 mm
Maximum value of SAR (interpolated) = 2.62 W/kg

Pin=50mW/Zoom Scan (5x5x7)/Cube 0: Measurement grid: dx=8mm, dy=8mm, dz=5mm
Reference Value = 46.23 V/m; Power Drift = 0.06 dB
Peak SAR (extrapolated) = 3.07 W/kg
SAR(1 g) = 1.79 W/kg; SAR(10 g) = 0.963 W/kg
Smallest distance from peaks to all points 3 dB below = 9.6 mm
Ratio of SAR at M2 to SAR at M1 = 57.7%
Maximum value of SAR (measured) = 2.68 W/kg

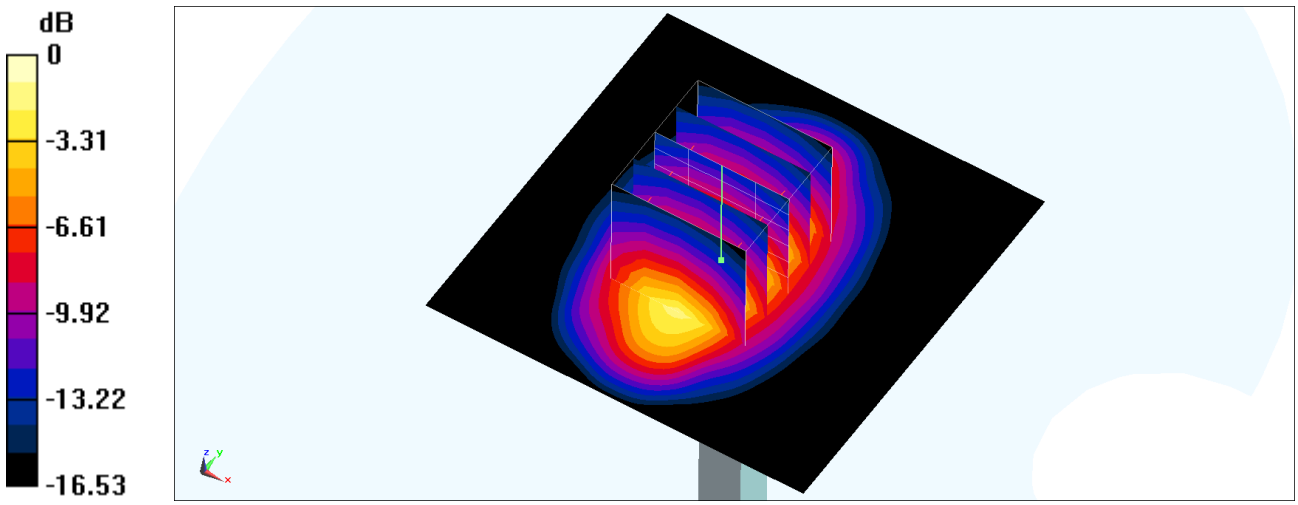

0 dB = 2.68 W/kg = 4.28 dBW/kg

Test Laboratory: Sporton International Inc. SAR/HAC Testing Lab Date: 2025/2/27

System Check_Head_1900MHz

DUT: D1900V2-5d093

Communication System: UID 0, CW; Frequency: 1900 MHz
Medium: HSL_1900_250227 Medium parameters used: f = 1900 MHz; σ = 1.429 S/m; ε_r = 39.155; ρ = 1000 kg/m^3
Ambient Temperature：23.5 ℃; Liquid Temperature：22.5 ℃

DASY5 Configuration:
- Probe: EX3DV4 - SN3931; ConvF(7.67, 7.38, 7.28) @ 1900 MHz; Calibrated: 2024/11/19
- Sensor-Surface: 1.4mm (Mechanical Surface Detection)
- Electronics: DAE4 Sn703; Calibrated: 2024/4/22
- Phantom: SAM_Left; Type: QD000P40CD; Serial: TP:1684
- Measurement SW: DASY52, Version 52.10 (4);SEMCAD X Version 14.6.14 (7501)

Pin=50mW/Area Scan (61x61x1): Interpolated grid: dx=1.500 mm, dy=1.500 mm
Maximum value of SAR (interpolated) = 2.77 W/kg

Pin=50mW/Zoom Scan (5x5x7)/Cube 0: Measurement grid: dx=8mm, dy=8mm, dz=5mm
Reference Value = 46.94 V/m; Power Drift = -0.05 dB
Peak SAR (extrapolated) = 3.15 W/kg
SAR(1 g) = 1.84 W/kg; SAR(10 g) = 0.968 W/kg
Smallest distance from peaks to all points 3 dB below = 9.6 mm
Ratio of SAR at M2 to SAR at M1 = 57.9%
Maximum value of SAR (measured) = 2.76 W/kg

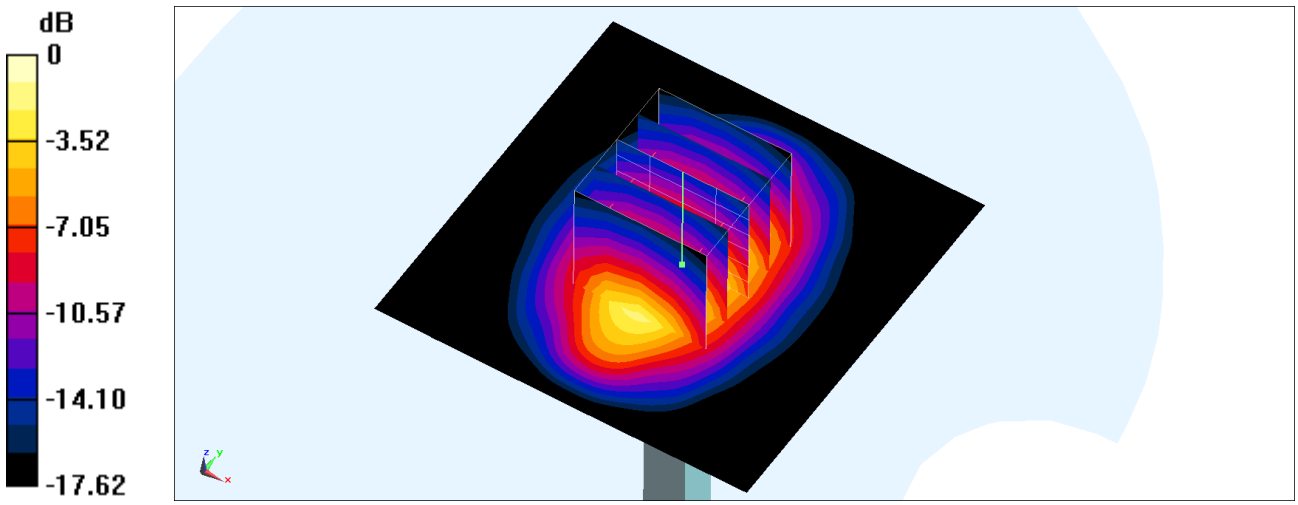

0 dB = 2.76 W/kg = 4.41 dBW/kg

Test Laboratory: Sporton International Inc. SAR/HAC Testing Lab Date: 2025/3/13

System Check_Head_2000MHz

DUT: D2000V2 - SN1010

Communication System: UID 0, CW; Frequency: 2000 MHz
Medium: HSL_2000_250313 Medium parameters used: f = 2000 MHz; σ = 1.434 S/m; ε_r = 39.193; ρ = 1000 kg/m^3
Ambient Temperature：23.6 ℃; Liquid Temperature：22.6 ℃

DASY5 Configuration:
- Probe: EX3DV4 - SN7700; ConvF(7.84, 7.54, 7.58) @ 2000 MHz; Calibrated: 2025/1/22
- Sensor-Surface: 1.4mm (Mechanical Surface Detection)
- Electronics: DAE4 Sn656; Calibrated: 2025/1/16
- Phantom: SAM_Left; Type: QD000P40CD; Serial: TP:1684
- Measurement SW: DASY52, Version 52.10 (4);SEMCAD X Version 14.6.14 (7501)

Pin=50mW/Area Scan (51x51x1): Interpolated grid: dx=1.500 mm, dy=1.500 mm
Maximum value of SAR (interpolated) = 3.08 W/kg

Pin=50mW/Zoom Scan (5x5x7)/Cube 0: Measurement grid: dx=8mm, dy=8mm, dz=5mm
Reference Value = 47.12 V/m; Power Drift = 0.10 dB
Peak SAR (extrapolated) = 3.39 W/kg
SAR(1 g) = 1.93 W/kg; SAR(10 g) = 0.995 W/kg
Smallest distance from peaks to all points 3 dB below = 9.6 mm
Ratio of SAR at M2 to SAR at M1 = 56.7%
Maximum value of SAR (measured) = 2.96 W/kg

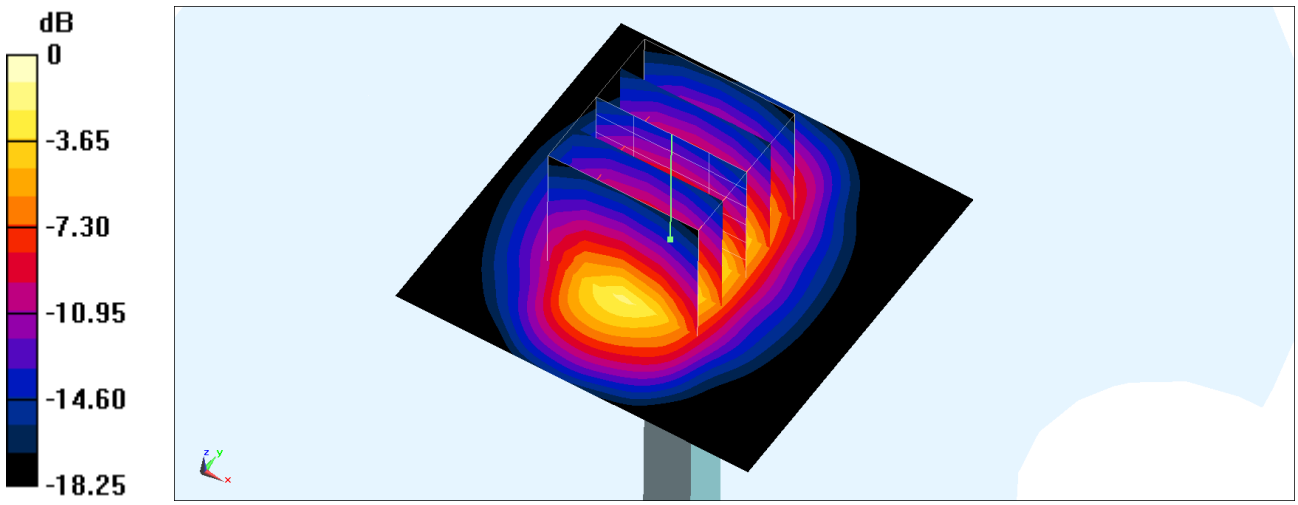

0 dB = 2.96 W/kg = 4.71 dBW/kg

Test Laboratory: Sporton International Inc. SAR/HAC Testing Lab Date: 2025/3/9

System Check_Head_2450MHz

DUT: D2450V2-929

Communication System: UID 0, CW; Frequency: 2450 MHz
Medium: HSL_2450_250309 Medium parameters used: f = 2450 MHz; σ = 1.832 S/m; ε_r = 38.635; ρ = 1000 kg/m^3
Ambient Temperature：23.5 ℃; Liquid Temperature：22.5 ℃

DASY5 Configuration:
- Probe: EX3DV4 - SN7791; ConvF(6.56, 7.38, 6.59) @ 2450 MHz; Calibrated: 2025/2/19
- Sensor-Surface: 1.4mm (Mechanical Surface Detection)
- Electronics: DAE4 Sn1776; Calibrated: 2025/2/12
- Phantom: SAM_Left; Type: QD000P40CD; Serial: TP:1684
- Measurement SW: DASY52, Version 52.10 (4);SEMCAD X Version 14.6.14 (7501)

Pin=50mW/Area Scan (81x81x1): Interpolated grid: dx=1.200 mm, dy=1.200 mm
Maximum value of SAR (interpolated) = 3.99 W/kg

Pin=50mW/Zoom Scan (7x7x7)/Cube 0: Measurement grid: dx=5mm, dy=5mm, dz=5mm
Reference Value = 48.09 V/m; Power Drift = 0.19 dB
Peak SAR (extrapolated) = 4.85 W/kg
SAR(1 g) = 2.45 W/kg; SAR(10 g) = 1.15 W/kg
Smallest distance from peaks to all points 3 dB below = 8.9 mm
Ratio of SAR at M2 to SAR at M1 = 51.1%
Maximum value of SAR (measured) = 4.02 W/kg

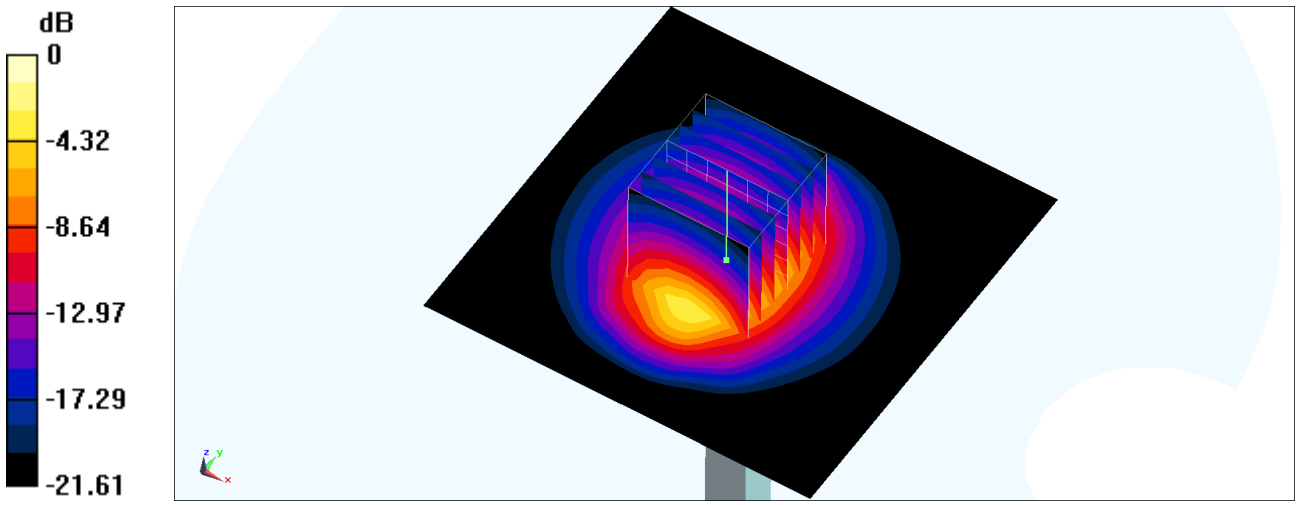

0 dB = 4.02 W/kg = 6.04 dBW/kg

Test Laboratory: Sporton International Inc. SAR/HAC Testing Lab Date: 2025/3/12

System Check_Head_2450MHz

DUT: D2450V2-929

Communication System: UID 0, CW; Frequency: 2450 MHz
Medium: HSL_2450_250312 Medium parameters used: f = 2450 MHz; σ = 1.767 S/m; ε_r = 39.07; ρ = 1000 kg/m^3
Ambient Temperature：23.3 ℃; Liquid Temperature：22.3 ℃

DASY5 Configuration:
- Probe: EX3DV4 - SN7439; ConvF(6.94, 7.28, 6.88) @ 2450 MHz; Calibrated: 2024/8/21
- Sensor-Surface: 1.4mm (Mechanical Surface Detection)
- Electronics: DAE4 Sn661; Calibrated: 2024/5/16
- Phantom: SAM_Left; Type: QD000P40CD; Serial: TP:1684
- Measurement SW: DASY52, Version 52.10 (4);SEMCAD X Version 14.6.14 (7501)

Pin=50mW/Area Scan (81x81x1): Interpolated grid: dx=1.200 mm, dy=1.200 mm
Maximum value of SAR (interpolated) = 3.79 W/kg

Pin=50mW/Zoom Scan (7x7x7)/Cube 0: Measurement grid: dx=5mm, dy=5mm, dz=5mm
Reference Value = 46.66 V/m; Power Drift = 0.03 dB
Peak SAR (extrapolated) = 4.67 W/kg
SAR(1 g) = 2.38 W/kg; SAR(10 g) = 1.12 W/kg
Smallest distance from peaks to all points 3 dB below = 9 mm
Ratio of SAR at M2 to SAR at M1 = 51.7%
Maximum value of SAR (measured) = 3.89 W/kg

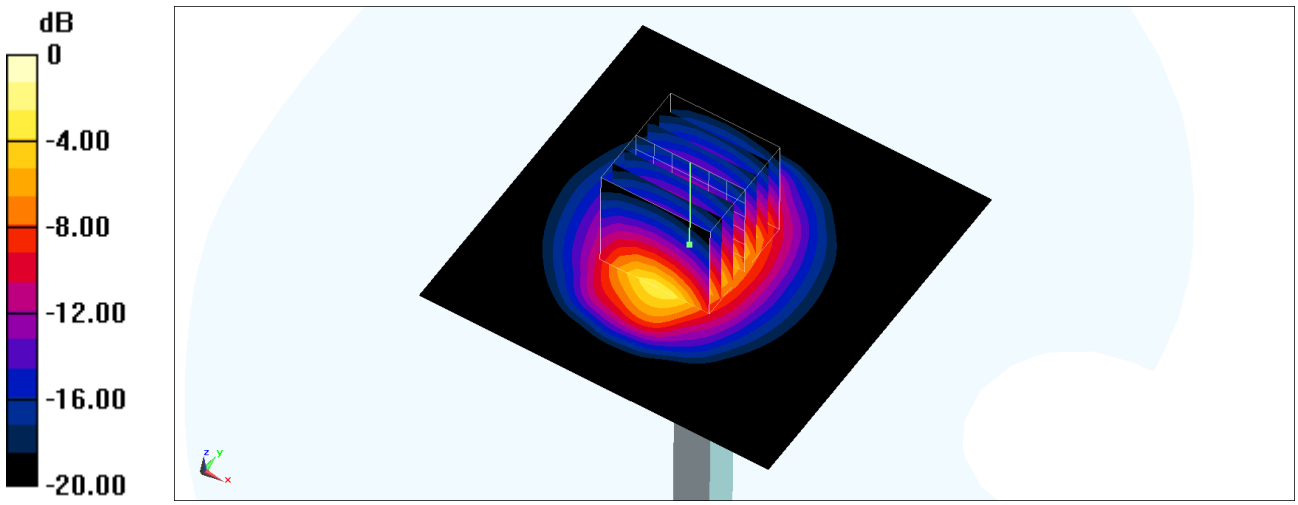

0 dB = 3.89 W/kg = 5.90 dBW/kg

Test Laboratory: Sporton International Inc. SAR/HAC Testing Lab Date: 2025/2/27

System Check_Head_2600MHz

DUT: D2600V2-1089

Communication System: UID 0, CW; Frequency: 2600 MHz
Medium: HSL_2600_250227 Medium parameters used: f = 2600 MHz; σ = 1.997 S/m; ε_r = 38.933; ρ = 1000 kg/m^3
Ambient Temperature：23.5 ℃; Liquid Temperature：22.5 ℃

DASY5 Configuration:
- Probe: EX3DV4 - SN3931; ConvF(7.01, 6.75, 6.65) @ 2600 MHz; Calibrated: 2024/11/19
- Sensor-Surface: 1.4mm (Mechanical Surface Detection)
- Electronics: DAE4 Sn703; Calibrated: 2024/4/22
- Phantom: SAM_Left; Type: QD000P40CD; Serial: TP:1684
- Measurement SW: DASY52, Version 52.10 (4);SEMCAD X Version 14.6.14 (7501)

Pin=50mW/Area Scan (71x71x1): Interpolated grid: dx=1.200 mm, dy=1.200 mm
Maximum value of SAR (interpolated) = 4.87 W/kg

Pin=50mW/Zoom Scan (7x7x7)/Cube 0: Measurement grid: dx=5mm, dy=5mm, dz=5mm
Reference Value = 49.54 V/m; Power Drift = 0.10 dB
Peak SAR (extrapolated) = 6.12 W/kg
SAR(1 g) = 2.99 W/kg; SAR(10 g) = 1.35 W/kg
Smallest distance from peaks to all points 3 dB below = 8.2 mm
Ratio of SAR at M2 to SAR at M1 = 49.4%
Maximum value of SAR (measured) = 5.02 W/kg

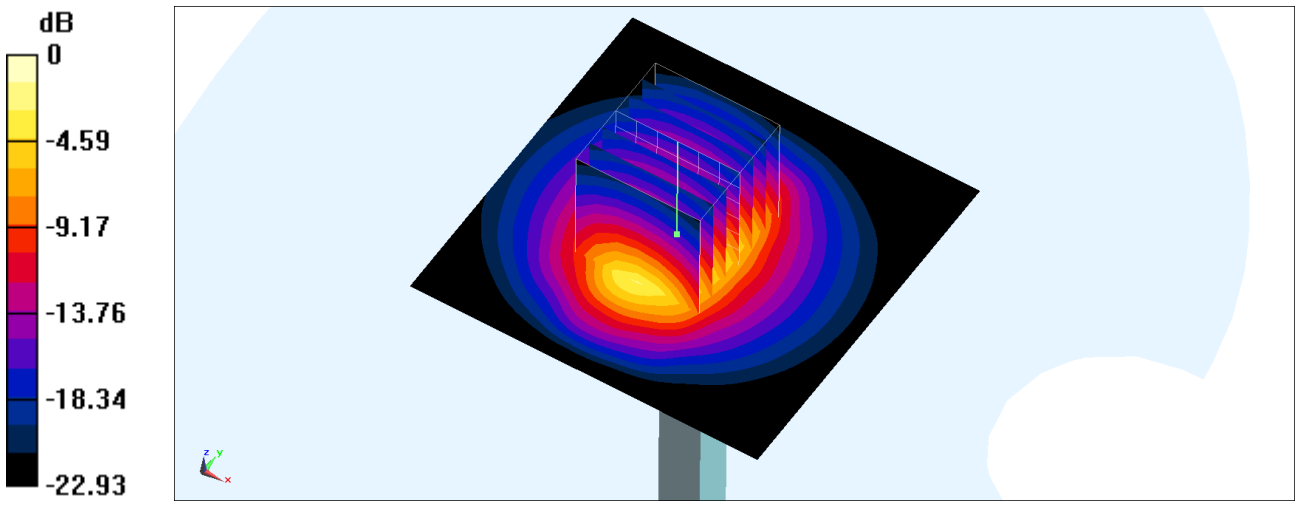

0 dB = 5.02 W/kg = 7.01 dBW/kg

Test Laboratory: Sporton International Inc. SAR/HAC Testing Lab Date: 2025/5/21

System Check_Head_2600MHz

DUT: D2600V2-1008

Communication System: UID 0, CW; Frequency: 2600 MHz
Medium: HSL_2600_250521 Medium parameters used: f = 2600 MHz; σ = 1.995 S/m; ε_r = 39.158; ρ = 1000 kg/m^3
Ambient Temperature：23.8 ℃; Liquid Temperature：22.8 ℃

DASY5 Configuration:
- Probe: EX3DV4 - SN3931; ConvF(7.01, 6.75, 6.65) @ 2600 MHz; Calibrated: 2024/11/19
- Sensor-Surface: 1.4mm (Mechanical Surface Detection)
- Electronics: DAE4 Sn1794; Calibrated: 2025/2/12
- Phantom: SAM_Left; Type: QD000P40CD; Serial: TP:1684
- Measurement SW: DASY52, Version 52.10 (4);SEMCAD X Version 14.6.14 (7501)

Pin=50mW/Area Scan (71x71x1): Interpolated grid: dx=1.200 mm, dy=1.200 mm
Maximum value of SAR (interpolated) = 4.37 W/kg

Pin=50mW/Zoom Scan (7x7x7)/Cube 0: Measurement grid: dx=5mm, dy=5mm, dz=5mm
Reference Value = 49.77 V/m; Power Drift = -0.02 dB
Peak SAR (extrapolated) = 5.18 W/kg
SAR(1 g) = 2.63 W/kg; SAR(10 g) = 1.2 W/kg
Smallest distance from peaks to all points 3 dB below = 9 mm
Ratio of SAR at M2 to SAR at M1 = 51.2%
Maximum value of SAR (measured) = 4.33 W/kg

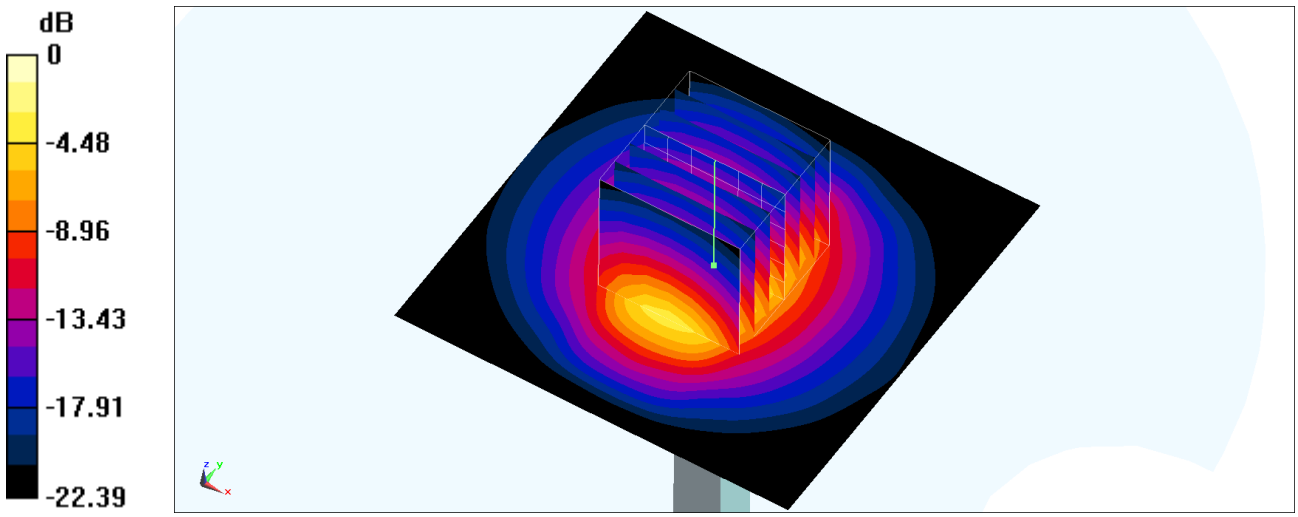

0 dB = 4.33 W/kg = 6.36 dBW/kg

Test Laboratory: Sporton International Inc. SAR/HAC Testing Lab Date: 2025/3/12

System Check_Head_5250MHz

DUT: D5GHzV2-1128

Communication System: UID 0, CW; Frequency: 5250 MHz
Medium: HSL_5G_250312 Medium parameters used: f = 5250 MHz; σ = 4.651 S/m; ε_r = 36.158; ρ = 1000 kg/m^3
Ambient Temperature：23.3 ℃; Liquid Temperature：22.3 ℃

DASY5 Configuration:
- Probe: EX3DV4 - SN7814; ConvF(5.59, 5.35, 5.48) @ 5250 MHz; Calibrated: 2024/6/20
- Sensor-Surface: 1.4mm (Mechanical Surface Detection)
- Electronics: DAE4 Sn1647; Calibrated: 2024/10/15
- Phantom: SAM_Left; Type: QD000P40CD; Serial: TP:1684
- Measurement SW: DASY52, Version 52.10 (4);SEMCAD X Version 14.6.14 (7501)

Pin=50mW/Area Scan (81x81x1): Interpolated grid: dx=1.000 mm, dy=1.000 mm
Maximum value of SAR (interpolated) = 8.86 W/kg

Pin=50mW/Zoom Scan (7x7x7)/Cube 0: Measurement grid: dx=4mm, dy=4mm, dz=1.4mm
Reference Value = 44.41 V/m; Power Drift = 0.12 dB
Peak SAR (extrapolated) = 16.3 W/kg
SAR(1 g) = 3.65 W/kg; SAR(10 g) = 1.03 W/kg
Smallest distance from peaks to all points 3 dB below = 7.2 mm
Ratio of SAR at M2 to SAR at M1 = 61.7%
Maximum value of SAR (measured) = 9.35 W/kg

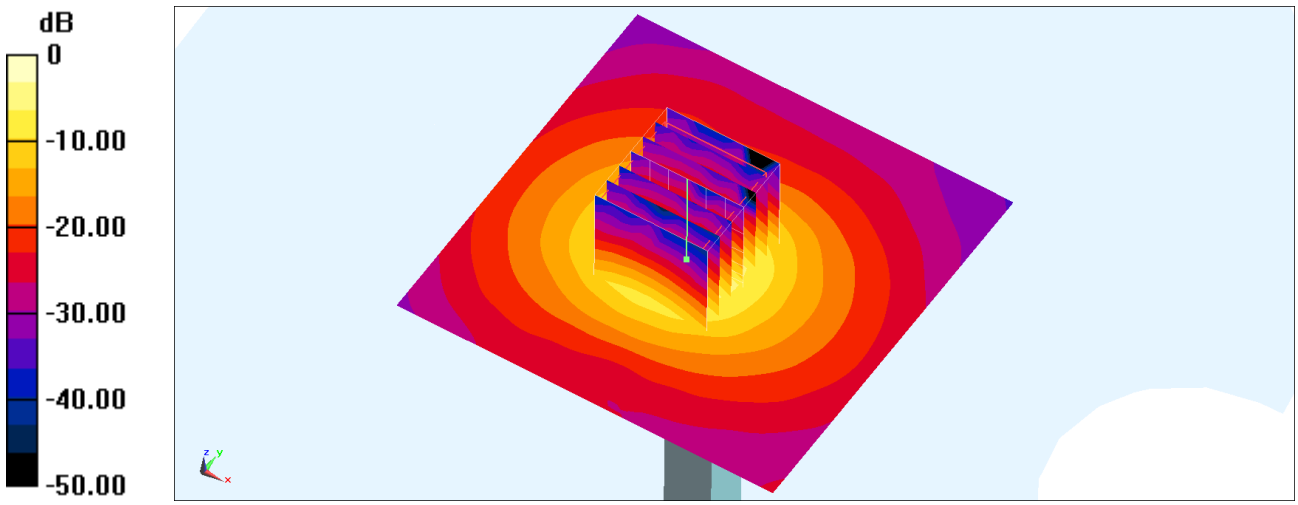

0 dB = 9.35 W/kg = 9.71 dBW/kg

Test Laboratory: Sporton International Inc. SAR/HAC Testing Lab Date: 2025/3/12

System Check_Head_5600MHz

DUT: D5GHzV2-1128

Communication System: UID 0, CW; Frequency: 5600 MHz
Medium: HSL_5G_250312 Medium parameters used: f = 5600 MHz; σ = 5.018 S/m; ε_r = 35.647; ρ = 1000 kg/m^3
Ambient Temperature：23.3 ℃; Liquid Temperature：22.3 ℃

DASY5 Configuration:
- Probe: EX3DV4 - SN7814; ConvF(4.97, 4.75, 4.87) @ 5600 MHz; Calibrated: 2024/6/20
- Sensor-Surface: 1.4mm (Mechanical Surface Detection)
- Electronics: DAE4 Sn1647; Calibrated: 2024/10/15
- Phantom: SAM_Left; Type: QD000P40CD; Serial: TP:1684
- Measurement SW: DASY52, Version 52.10 (4);SEMCAD X Version 14.6.14 (7501)

Pin=50mW/Area Scan (81x81x1): Interpolated grid: dx=1.000 mm, dy=1.000 mm
Maximum value of SAR (interpolated) = 9.78 W/kg

Pin=50mW/Zoom Scan (7x7x7)/Cube 0: Measurement grid: dx=4mm, dy=4mm, dz=1.4mm
Reference Value = 44.13 V/m; Power Drift = 0.15 dB
Peak SAR (extrapolated) = 19.9 W/kg
SAR(1 g) = 3.91 W/kg; SAR(10 g) = 1.09 W/kg
Smallest distance from peaks to all points 3 dB below = 7.2 mm
Ratio of SAR at M2 to SAR at M1 = 58%
Maximum value of SAR (measured) = 10.4 W/kg

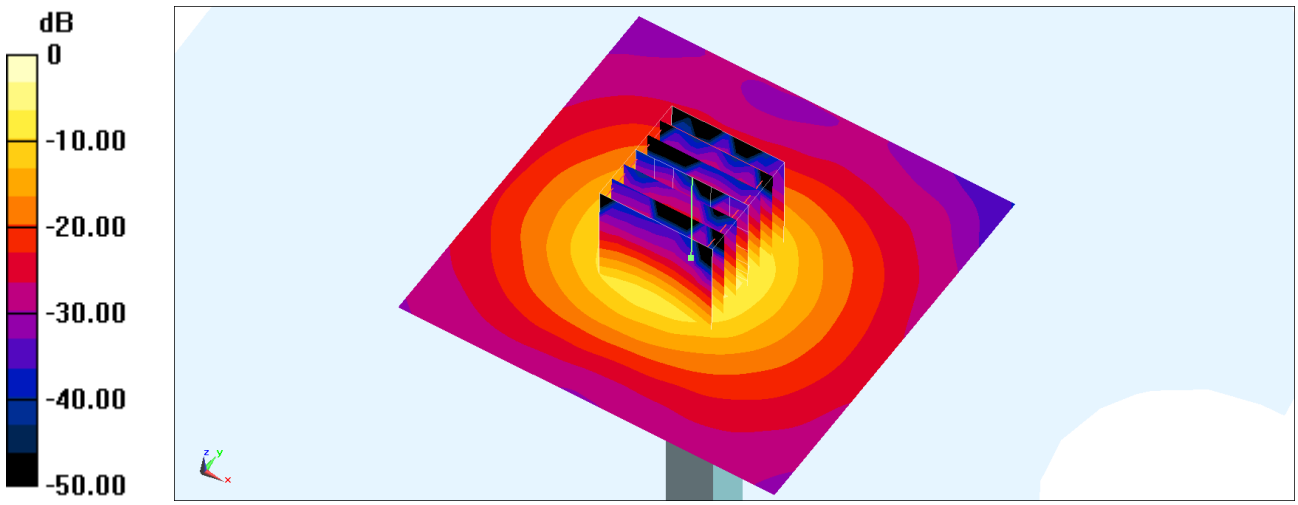

0 dB = 10.4 W/kg = 10.17 dBW/kg

Test Laboratory: Sporton International Inc. SAR/HAC Testing Lab Date: 2025/3/12

System Check_Head_5800MHz

DUT: D5GHzV2-1128

Communication System: UID 0, CW; Frequency: 5800 MHz
Medium: HSL_5G_250312 Medium parameters used: f = 5800 MHz; σ = 5.233 S/m; ε_r = 35.393; ρ = 1000 kg/m^3
Ambient Temperature：23.3 ℃; Liquid Temperature：22.3 ℃

DASY5 Configuration:
- Probe: EX3DV4 - SN7814; ConvF(5.02, 4.8, 4.92) @ 5800 MHz; Calibrated: 2024/6/20
- Sensor-Surface: 1.4mm (Mechanical Surface Detection)
- Electronics: DAE4 Sn1647; Calibrated: 2024/10/15
- Phantom: SAM_Left; Type: QD000P40CD; Serial: TP:1684
- Measurement SW: DASY52, Version 52.10 (4);SEMCAD X Version 14.6.14 (7501)

Pin=50mW/Area Scan (81x81x1): Interpolated grid: dx=1.000 mm, dy=1.000 mm
Maximum value of SAR (interpolated) = 9.16 W/kg

Pin=50mW/Zoom Scan (7x7x7)/Cube 0: Measurement grid: dx=4mm, dy=4mm, dz=1.4mm
Reference Value = 41.41 V/m; Power Drift = -0.12 dB
Peak SAR (extrapolated) = 19.0 W/kg
SAR(1 g) = 3.58 W/kg; SAR(10 g) = 1.02 W/kg
Smallest distance from peaks to all points 3 dB below = 7.2 mm
Ratio of SAR at M2 to SAR at M1 = 56.4%
Maximum value of SAR (measured) = 9.70 W/kg

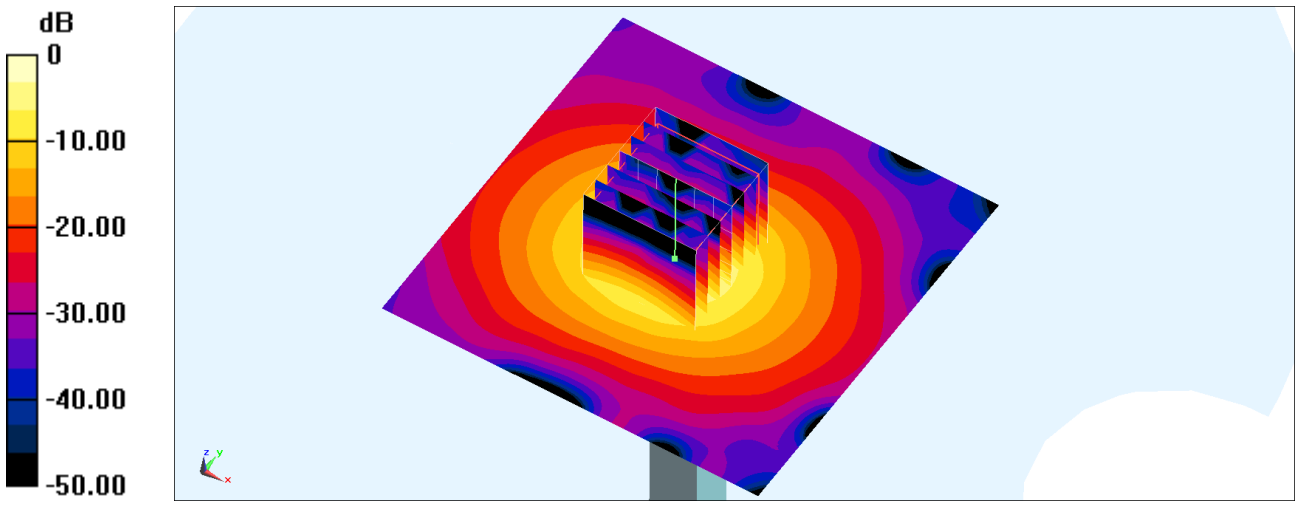

0 dB = 9.70 W/kg = 9.87 dBW/kg

Test Laboratory: Sporton International Inc. SAR/HAC Testing Lab Date: 2025/3/12

System Check_Head_5800MHz

DUT: D5GHzV2-1128

Communication System: UID 0, CW; Frequency: 5800 MHz
Medium: HSL_5G_250312 Medium parameters used: f = 5800 MHz; σ = 5.233 S/m; ε_r = 35.393; ρ = 1000 kg/m^3
Ambient Temperature：23.3 ℃; Liquid Temperature：22.3 ℃

DASY5 Configuration:
- Probe: EX3DV4 - SN7439; ConvF(4.73, 4.96, 4.68) @ 5800 MHz; Calibrated: 2024/8/21
- Sensor-Surface: 1.4mm (Mechanical Surface Detection)
- Electronics: DAE4 Sn661; Calibrated: 2024/5/16
- Phantom: SAM_Left; Type: QD000P40CD; Serial: TP:1684
- Measurement SW: DASY52, Version 52.10 (4);SEMCAD X Version 14.6.14 (7501)

Pin=100mW/Area Scan (71x71x1): Interpolated grid: dx=1.000 mm, dy=1.000 mm
Maximum value of SAR (interpolated) = 21.1 W/kg

Pin=100mW/Zoom Scan (7x7x7)/Cube 0: Measurement grid: dx=4mm, dy=4mm, dz=1.4mm
Reference Value = 66.69 V/m; Power Drift = -0.05 dB
Peak SAR (extrapolated) = 43.3 W/kg
SAR(1 g) = 8.16 W/kg; SAR(10 g) = 2.29 W/kg
Smallest distance from peaks to all points 3 dB below = 7.2 mm
Ratio of SAR at M2 to SAR at M1 = 56.5%
Maximum value of SAR (measured) = 22.2 W/kg

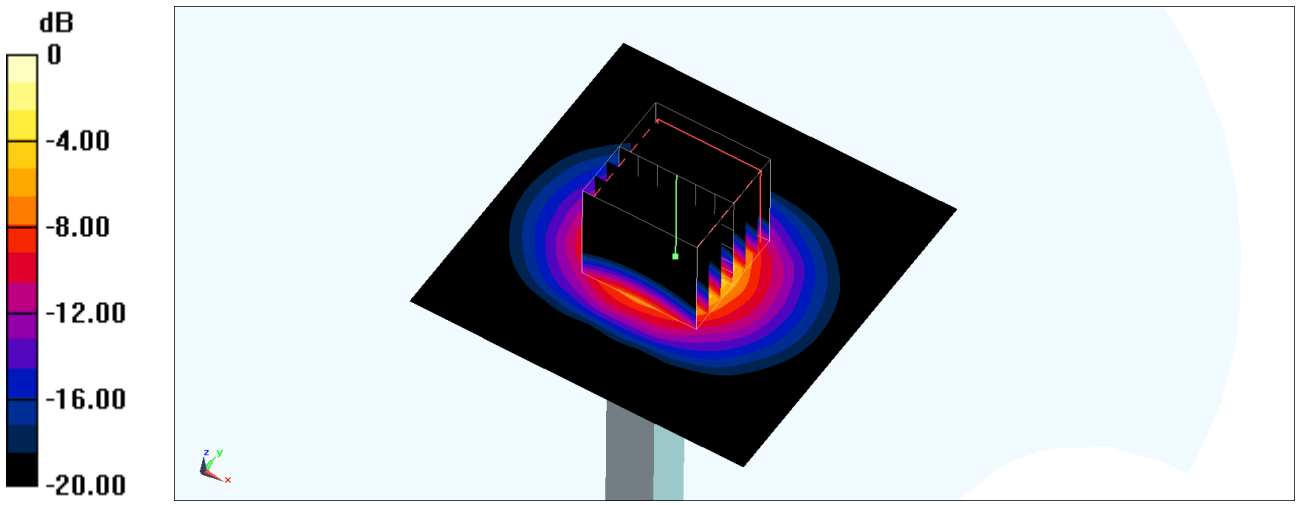

0 dB = 22.2 W/kg = 13.46 dBW/kg