HEARING AID COMPATIBILITY T-COIL TEST REPORT

FCC ID	:	**A4RG6GPR**
Equipment	:	**Phone**
Model Name	:	**G6GPR**
Results	:	**PASS**
Applicant	:	**Google LLC 1600 Amphitheatre Parkway, Mountain View, California, 94043 USA**
Standard	:	**FCC 47 CFR §20.19 ANSI C63.19-2019**

The product was received on Aug. 22, 2023 and testing was started from Sep. 09, 2023 and completed on Oct. 02, 2023. We, SPORTON INTERNATIONAL INC., would like to declare that the tested sample provide by manufacturer and the test data has been evaluated in accordance with the test procedures given in ANSI 63.19-2019 / 47 CFR Part 20.19 and has been pass the FCC requirement.

The test results in this report apply exclusively to the tested model / sample. Without written approval of SPORTON INTERNATIONAL INC. Laboratory, the test report shall not be reproduced except in full.

Cona Huang

Approved by: Cona Huang / Deputy Manager

Sporton International Inc. Wensan Laboratory
No.58, Aly. 75, Ln. 564, Wenhua 3rd, Rd., Guishan Dist., Taoyuan City 333010, Taiwan

Table of Contents

1. General Information 4
2. Testing Location 5
3. Applied Standards 5
4. Air Interface and Operating Mode 6
5. T-Coil coupling mode requirements 7
5.1 T-Coil coupling qualifying field strengths 7
5.2 Frequency Response 7
5.3 Desired ABM signal, undesired ABM field qualification requirements 8
5.4 T-Coil measurement and reference plane 9
6. Test procedure for T-Coil signal 10
7. Test Equipment List 16
8. T-Coil testing for CMRS Voice 17
8.1 GSM Evaluation Results 17
8.2 UMTS Evaluation Results 18
8.3 VoLTE Evaluation Results 19
8.4 VoNR Evaluation Results 20
8.5 VoWiFi Evaluation Results 21
9. T-Coil testing for OTT Voice Calling 22
10. Uncertainty Assessment 26
11. References 27

Appendix A. Plots of T-Coil Measurement
Appendix B. DASY Calibration Certificate
Appendix C. Test Setup Photos

History of this test report

Report No.	Version	Description	Issued Date
HA380308B	Rev. 01	Initial issue of report	Nov. 14, 2023

1. General Information

Product Feature & Specification	
Applicant Name	Google LLC
Equipment Name	Phone
Model Name	G6GPR
FCC ID	A4RG6GPR
S/N	38031JEKB01669
Frequency Band	GSM850: 824.2 MHz ~ 848.8 MHz GSM1900: 1850.2 MHz ~ 1909.8 MHz WCDMA Band II: 1850 MHz ~ 1910 MHz WCDMA Band IV: 1710 MHz ~ 1755 MHz WCDMA Band V: 824 MHz ~ 849 MHz LTE Band 2: 1850 MHz ~ 1910 MHz LTE Band 4: 1710 MHz ~ 1755 MHz LTE Band 5: 824 MHz ~ 849 MHz LTE Band 7: 2500 MHz ~ 2570 MHz LTE Band 12: 699 MHz ~ 716 MHz LTE Band 17: 704 MHz ~ 716 MHz LTE Band 26: 814 MHz ~ 849 MHz LTE Band 38: 2570 MHz ~ 2620 MHz LTE Band 41: 2496 MHz ~ 2690 MHz LTE Band 66: 1710 MHz ~ 1780 MHz 5G NR n2 : 1850 MHz ~ 1910 MHz 5G NR n5 : 824 MHz ~ 849 MHz 5G NR n7 : 2500 MHz ~ 2570 MHz 5G NR n12 : 699 MHz ~ 716 MHz 5G NR n26 : 814 MHz ~ 849 MHz 5G NR n38 : 2570 MHz ~ 2620 MHz 5G NR n41 : 2496 MHz ~ 2690 MHz 5G NR n66 : 1710 MHz ~ 1780 MHz 5G NR n77: 3700 MHz ~ 3980 MHz, 3450MHz ~ 3550MHz WLAN 2.4 GHz Band: 2400 MHz ~ 2483.5 MHz WLAN 5.2 GHz Band: 5150 MHz ~ 5250 MHz WLAN 5.3 GHz Band: 5250 MHz ~ 5350 MHz WLAN 5.6 GHz Band: 5470 MHz ~ 5725 MHz WLAN 5.8 GHz Band: 5725 MHz ~ 5850 MHz WLAN 5.9 GHz Band: 5850 MHz ~ 5895 MHz WLAN 6E: 5925 MHz~6425 MHz, 6425 MHz~6525 MHz, 6525MHz~6875MHz, 6875 MHz~7125 MHz Bluetooth: 2400 MHz ~ 2483.5 MHz NFC : 13.56 MHz WPC Rx: 110KHz ~ 148.5KHz
Mode	GSM/GPRS/EGPRS RMC/AMR 12.2Kbps HSDPA HSUPA LTE: QPSK, 16QAM, 64QAM, 256QAM 5G NR: DFT-s-OFDM/CP-OFDM, Pi/2 BPSK/QPSK/16QAM/64QAM/256QAM WLAN: 802.11a/b/g/n/ac/ax HT20/HT40/VHT20/VHT40/VHT80/HE20/HE40/HE80 Bluetooth BR/EDR/LE/HR/Channel sounding NFC: ASK WPC Rx: ASK

Reviewed by: Jason Wang
Report Producer: Paula Chen

2. Testing Location

Sporton Lab is accredited to ISO 17025 by Taiwan Accreditation Foundation (TAF code: 3786) and the FCC designation No. TW3786 under the FCC 2.948(e) by Mutual Recognition Agreement (MRA) in FCC test.

Testing Laboratory	
Test Site	SPORTON INTERNATIONAL INC.
Test Site Location	No.58, Aly. 75, Ln. 564, Wenhua 3rd, Rd., Guishan Dist., Taoyuan City 333010, Taiwan TEL:+886-3-327-0838 FAX: +886-3-327-0855
Test Site No.	Sporton Site No.: **SAR15-HY**

3. Applied Standards

- FCC CFR47 Part 20.19
- ANSI C63.19-2019
- FCC KDB 285076 D01 HAC Guidance v06r04
- FCC KDB 285076 D02 T Coil testing v04
- FCC KDB 285076 D03 HAC FAQ v01r06

4. Air Interface and Operating Mode

Air Interface	Band MHz	Type	C63.19 Tested	Simultaneous Transmitter	Name of Voice Service	Power Reduction
GSM	GSM850	VO	Yes	WLAN, BT	CMRS Voice	No
	GSM1900			WLAN, BT		No
	EDGE850	VD	Yes	WLAN, BT	Google Meet(1)	No
	EDGE1900					
UMTS	Band 2	VO	Yes	WLAN, BT	CMRS Voice	No
	Band 4			WLAN, BT		No
	Band 5			WLAN, BT		No
	HSPA	VD	Yes	WLAN, BT	Google Meet(1)	No
LTE (FDD)	Band 2	VD	Yes	5G NR, WLAN, BT	VoLTE / Google Meet(1)	No
	Band 4			5G NR, WLAN, BT		No
	Band 5			5G NR, WLAN, BT		No
	Band 7			5G NR, WLAN, BT		No
	Band 12			5G NR, WLAN, BT		No
	Band 17			5G NR, WLAN, BT		No
	Band 26			5G NR, WLAN, BT		No
	Band 66			5G NR, WLAN, BT		No
LTE (TDD)	Band 38			5G NR, WLAN, BT		No
	Band 41			5G NR, WLAN, BT		No
5G NR (FDD)	n2	VD	Yes	LTE, WLAN, BT	VoNR / Google Meet(1)	No
	n5			LTE, WLAN, BT		No
	n7			LTE, WLAN, BT		No
	n12			LTE, WLAN, BT		No
	n26			LTE, WLAN, BT		No
	n66			LTE, WLAN, BT		No
5G NR (TDD)	n38			LTE, WLAN, BT		No
	n41			LTE, WLAN, BT		No
	n77			LTE, WLAN, BT		No
Wi-Fi	2450	VD	Yes	GSM, WCDMA, LTE, 5G NR, 5G/6G WLAN	VoWiFi / Google Meet(1)	No
	5200			GSM, WCDMA, LTE, 5G NR, 2.4G WLAN, BT		No
	5300			GSM, WCDMA, LTE, 5G NR, 2.4G WLAN, BT		No
	5500			GSM, WCDMA, LTE, 5G NR, 2.4G WLAN, BT		No
	5800 / 5900			GSM, WCDMA, LTE, 5G NR, 2.4G WLAN, BT		No
Wi-Fi	U-NII 5	VD	Yes(2)	GSM, WCDMA, LTE, 5G NR, 2.4G WLAN, BT		No
	U-NII 6		No(2)			
	U-NII 7					
	U-NII 8					
BT	2450	DT	No	GSM, WCDMA, LTE, 5G NR, 5G/6G WLAN	NA	No

Type Transport:
VO= Voice only
DT= Digital Transport only (no voice)
VD= CMRS and IP Voice Service over Digital Transport

Remark:
1. For protocols not listed in Table 6.1 of ANSI C63.19:2019, the average speech level of −20 dBm0 should be used..
2. The UNII-5 was evaluated for operations which are entirely below 6 GHz, above 6 GHz were not evaluated due outside of the current scope of ANSI C63.19 and FCC HAC regulations.
3. Because features of Google Meet allow the option of voice-only communications, Meet has been tested for HAC/T-Coil compatibility to ensure the best user experience.
4. The device have similar frequency in some LTE and NR bands: LTE B12/17, 5/26, 4/66, 38/41 and NR Band 5/26, 38/41, since the supported frequency spans for the smaller LTE and NR bands are completely cover by the larger LTE and NR bands, therefore, only larger LTE and NR bands were required to be tested for hearing-aid compliance.

5. T-Coil coupling mode requirements

5.1 T-Coil coupling qualifying field strengths

When measured as specified in this standard, there are two groups of qualifying measurement points:

Primary group: A qualifying measurement point shall have its T-Coil signal, desired ABM signal, ≥−18 dB(A/m) at 1 kHz, in a 1/3 octave band filter. These measurements shall be made with the WD operating at a reference input level as specified in Table 6.1. simultaneously, the qualifying measurement point shall have its weighted magnetic noise, undesired ABM field ≤−38 dB(A/m).

Secondary group: A qualifying measurement point shall have its weighted magnetic noise, undesired ABM field ≤−38 dB(A/m). This group inherently includes all the members of the primary group.

These levels are designed to be compatible with hearing aids that produce the same acoustic output level for either an acoustic input level of 65 dB SPL or a magnetic input level of −25 dB(A/m) (56.2 mA/m) 39 at either 1.0 kHz or 1.6 kHz. The hearing aid operational measurements are performed per ANSI S3.22-2014

5.2 Frequency Response

The frequency response of the magnetic field, measured in 1/3 octave bands, shall follow the response curve specified in this subclause, over the frequency range 300 Hz to 3 kHz.

Figure 6.4 and Figure 6.5 provide the boundaries for the specified frequency. These response curves are for true field strength measurements of the T-Coil signal. Thus the 6 dB/octave probe response has been corrected from the raw readings.

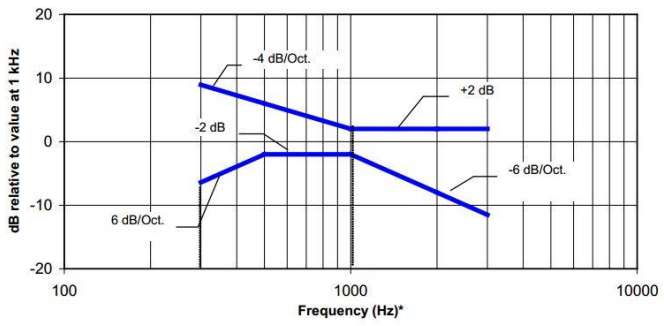

NOTE—Frequency response is between 300 Hz and 3 kHz.

Figure 6.4—Magnetic field frequency response for WDs with a maximum field ≤−15 dB(A/m) at 1 kHz

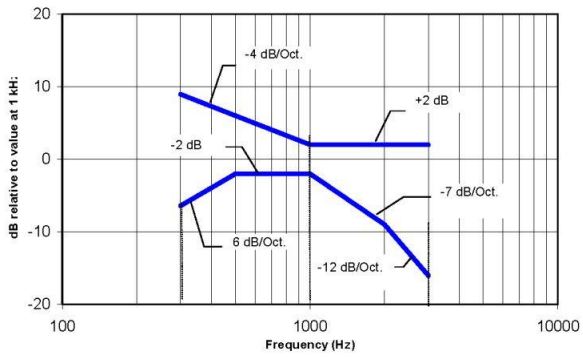

NOTE—Frequency response is between 300 Hz and 3000 Hz.

Figure 6.5—Magnetic field frequency response for WDs with a maximum field that exceeds −15 dB(A/m) at 1 kHz

5.3 Desired ABM signal, undesired ABM field qualification requirements

<Non-2G GSM operating modes>

The goal of this requirement is to ensure an adequate area where desired ABM signal is sufficiently strong to be heard clearly and a larger area where undesired ABM field is sufficiently low as to avoid undue annoyance. Qualifying measurement points shall fulfill the requirements of ANSI 63.19-2019 section 6.6.2; both the primary and
secondary group requirements shall be met:

- The primary group shall include at least 75 measurement points
- The secondary group shall include at least 300 contiguous measurement points

Additionally, to avoid an oddly shaped area of low noise, the secondary group shall include at least one longitudinal column of at least 10 contiguous qualifying points and at least one transverse row containing at least 15 contiguous qualifying points.

Figure 6.6 is an example of a qualifying scan. The total number of primary group qualifying measurement points is 161 , which is ≥75. The total number of secondary group qualifying points is 536, which is ≥300

The secondary group has a longitudinal column of 26, which is ≥10, and a transverse row also of 26 contiguous points, which is ≥15

<2G GSM operating modes>

If the 2G GSM operating mode(s) are selected for qualification, the qualifying measurement points shall fulfil the requirements of ANSI 63.19-2019 section 6.6.2; both the primary and secondary group requirements shall be met:

- The primary group shall include at least 25 measurement points
- The secondary group shall include at least 125 contiguous measurement points

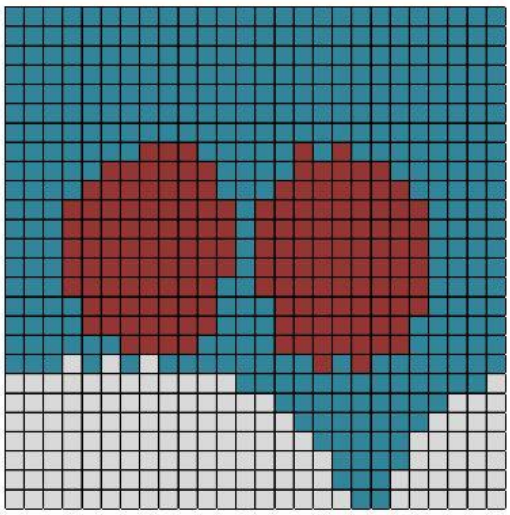

Red (primary group): AB desired ABM signal M1 ≥−18 dB(A/m) and undesired ABM field ≤−38 dB(A/m)
Blue and red (secondary group): undesired ABM field ≤−38 dB(A/m)

Figure 6.6—An example of a qualifying desired ABM signal, undesired ABM field scan:

5.4 T-Coil measurement and reference plane

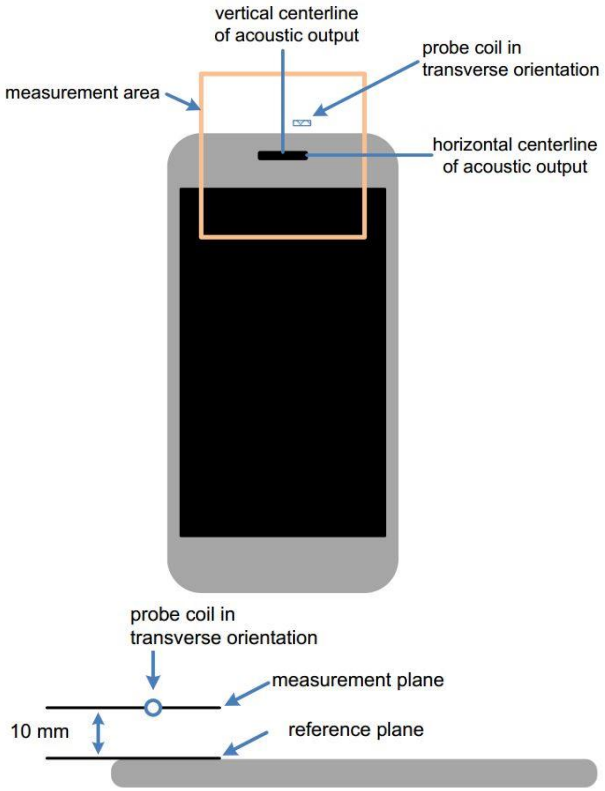

Measurement and reference planes probe orientation for WD audio frequency magnetic field measurements

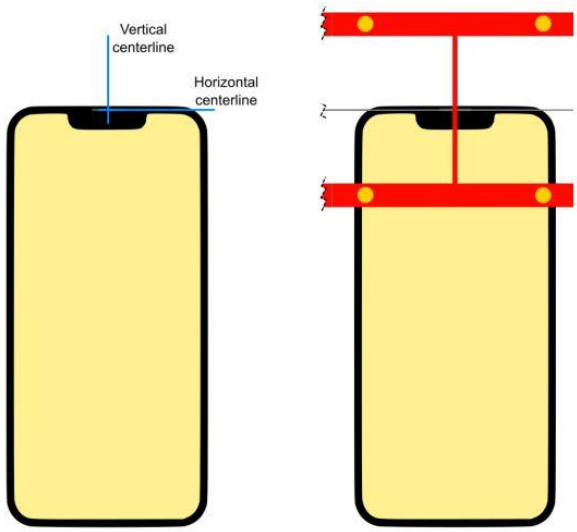

Device Under Test Positioning under the Test Arch

The T-Coil measurement plane, reference plane and other measurement parameters shall be:

a. The reference plane is the planar area that contains the highest point in the area of the phone that normally rests against the user's ear. It is parallel to the centerline of the receiver area of the phone and is defined by the points of the receiver-end of the WD handset, which, in normal handset use, rest against the ear.
b. The measurement plane is parallel to, and 10 mm in front of, the reference plane.
c. The reference axis is normal to the reference plane and passes through the center of the acoustic output (or the center of the hole array); or may be centered on or near a secondary inductive source. The actual location of the reference axis and resultant measurement area shall be noted in the test report.
d. The measurement area shall be 50 mm by 50 mm. The measurement area for both desired ABM signal and undesired ABM field may be located where the transverse magnetic measurements are optimum with regard to the requirements. However, the measurement area should be in the vicinity of the acoustic output of the WD and shall be located in the same half of the phone as the WD receiver. In a WD handset with a centered receiver and a circularly symmetrical magnetic field, the measurement axis and the reference axis would coincide.
e. Measurements of desired ABM signal strength and undesired ABM field are made at 2.0 mm ± 0.5 mm or 4 mm intervals in an X-Y measurement area pattern over the entire measurement area (676 measurement points total); either all measured, or measured plus interpolated, per ANSI 63.19-2019 section 6.4
f. Desired ABM signal frequency response is measured at a single location at or near the maximum
g. desired ABM signal strength location.
h. The actual locations of the measurement points shall be noted in the test report.

6. Test procedure for T-Coil signal

This subclause describes the procedures used to measure the ABM (T-Coil) performance of the WD. Measurements shall be performed over a measurement area 50 mm square, in the measurement plane, as specified in ANSI 63.19-2019 A.3. The measurement area shall be scanned with a uniform measurement point spacing of 2.0 mm ± 0.5 mm in each X-Y axis of the plane, yielding 676 measurement points with approximately even
spacing throughout the area

Optionally, measurement point spacing may be increased to 4 mm, with interpolation employed to yield the required 676 equivalent measurement points distributed uniformly over the 50 mm square measurement area. Interpolated points shall be derived from the average of the linear representations of the field strengths of the nearest two or four equidistant measured points. The area of measurement is increased to a 52 mm square so that edge rows and columns of the required 50 mm square can be either measured or interpolated, with none extrapolated.

In addition to measuring the desired ABM signal levels, the weighted magnitude of the unintended signal shall also be determined. Weighting of the unintended and undesired ABM field shall be by the spectral and temporal weighting described in ANSI 63.19-2019 D.4 through D.6

In order to assure that the required signal quality is measured, the measurement of the intended signal and the measurement of the unintended signal shall be made at the same locations. Measurements shall not include undesired influence from the WD's RF field; therefore, use of a coaxial connection to a base station simulator or non-radiating load might be necessary. However, even then with a coaxial connection to a base station simulator or non-radiating load there could still be RF leakage from the WD, which could interfere with the desired measurement. Pre-measurement checks should be made to avoid this possibility. All measurements shall be done with the WD operating on battery power with an appropriate normal speech audio signal input level given in ANSI 63.19-2019 Table 6.1. If the device display can be turned off during a phone call, then that may be done during the measurement as well. If tested with the display in the off state this shall be documented in the test report

Measurements shall be performed with the probe coil oriented in the transverse direction, as illustrated in ANSI 63.19-2019 A.3, that is, aligned in the plane of the measurement area and perpendicular to the long dimension of the WD. A multi-stage sequence consists of first measuring the field strength of the desired T-Coil signal (desired ABM signal) that is useful to a hearing aid T-Coil at each specified measurement point. The undesired magnetic component (undesired ABM field) is then measured in the same transverse orientation at each of the same measurement points. At a single location only, taken at or near the highest desired ABM signal reading, the desired ABM signal frequency response shall be determined in a third measurement stage. The flowchart in ANSI 63.19-2019 Figure 6.3 illustrates this three-stage process.

To minimize the need to test every WD operating mode to the telecoil requirements of ANSI 63.19-2019 Clause 6, it is permissible to exclude some subset of supported configurations. For a given WD, every mode that supports voice communication shall be considered for telecoil testing. However, if it can be demonstrated that a certain configuration will not be the worst-case telecoil configuration, such configurations may be excluded from the full telecoil scans of ANSI 63.19-2019 section 6.4. 34 For example, operating modes may be pre-screened by scanning for both desired ABM signal and undesired ABM field at a lower measurement point density than the final scans, thus saving considerable testing time by eliminating configurations that are excellent performers from more detailed testing for worst-case. In any case, the specific methods and criteria used to determine
which configurations are excluded for a WD shall be explicitly stated and justified in the test report. To be considered for exclusion from telecoil testing, operating modes shall also be shown to pass the frequency response requirements of ANSI 63.19-2019 section 6.6.3.

Many factors could affect telecoil test results. RF power level and amplitude modulation characteristics as well as the specific current paths within the WD associated with the RF output stage(s), the display, and processing circuitry could affect the undesired ABM field. Audio codec implementation and acoustic receiver characteristics could also affect the desired ABM signal). Therefore, any justifications for exclusions should be thorough documented. If an operating mode is under user control and instructions on how to place the WD in a less interfering condition is in the user instructions, those instructions may be followed in configuring the device for testing

Test flow for T-Coil signal test

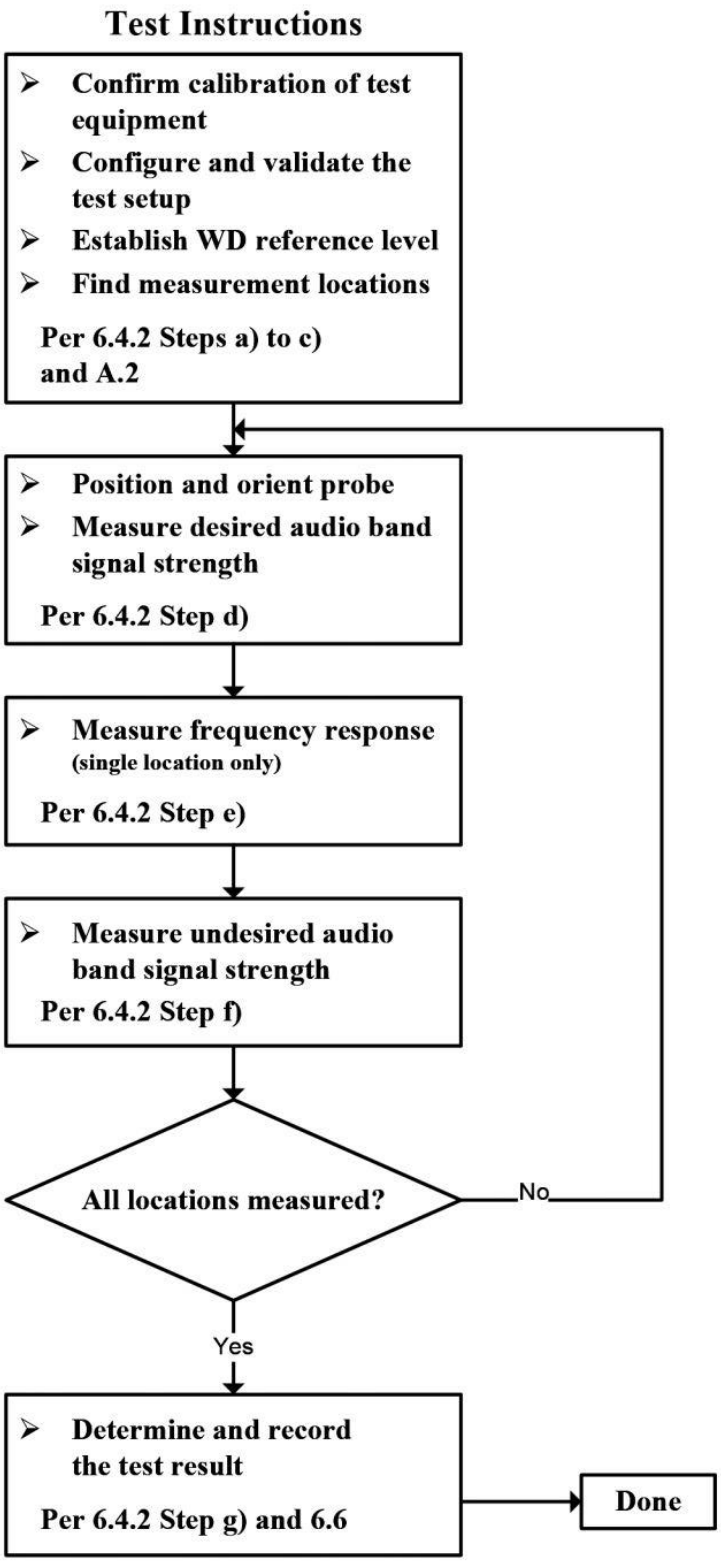

The following steps summarize the basic test flow for determining desired ABM signal and undesired ABM field. These steps assume that a sine wave or narrowband 1/3 octave signal can be used for the measurement of desired ABM signal level. An alternative procedure, yielding equivalent results, using a broadband excitation is described in ANSI 63.19-2019 section 6.5.

a. A validation of the test setup and instrumentation shall be performed. This may be done using a TMFS or Helmholtz Coil. Measure the emissions and confirm that they are within tolerance of the expected values.
b. Confirm that equipment that requires calibration has been calibrated, and that the noise level meets the requirements given in ANSI 63.19-2019 section 6.3.2.
c. Position the WD in the test setup and connect the WD RF connector to a base station simulator or a non-radiating load (if necessary to control RF interference in the measurement equipment) as shown in section 6.1 or section 6.2.
d. The drive level to the WD is set such that the reference input level specified in ANSI 63.19-2019 Table 6.1 is input to the base station simulator (or manufacturer's test mode equivalent) in the 1 kHz, 1/3 octave band. This drive level shall be used for the T-Coil signal test (desired ABM signal) at f = 1 kHz. Either a sine wave at 1025 Hz, or a voice-like signal, band-limited to the 1 kHz 1/3 octave, as specified in 6.4.3, shall be used for the reference audio signal. If interference is found at 1025 Hz an alternative nearby reference audio signal frequency may be used. 35 The same drive level will be used for the desired ABM signal frequency response measurements at each 1/3 octave band center frequency. The WD volume control may be set at any level up to maximum, provided that a signal at any frequency at maximum modulation would not result in clipping or signal overload.
e. At each measurement location over the measurement area and in the transverse orientation, measure and record the desired 1 kHz T-Coil magnetic signal (desired ABM signal) as described in Step c).
f. At or near a location representing a maximum in the just-measured desired ABM signal, measure and record the desired T-Coil magnetic signals (desired ABM signal at fi) as described in ANSI 63.19-2019 section 6.4.5.2 in each individual ISO 266:1975 R10 standard 1/3 octave band. The desired audio band input frequency (fi) shall be centered in each 1/3 octave band maintaining the same drive level as determined in Step c), and the reading taken for that band. Equivalent methods of determining the frequency response may also be employed, such as fast Fourier transform (FFT) analysis using noise excitation or input–output comparison using simulated speech. The full-band integrated or half-band integrated probe output, as described in ANSI 63.19-2019 D.9, may be used, as long as the appropriate calibration curve is applied to the measured result, so as to yield an accurate measurement of the field magnitude. (The resulting measurement shall be an accurate measurement in dB(A/m).) Compare the frequency response found to the requirements of ANSI 63.19-2019 section 6.6.3.
g. At the same locations measured in Step d), measure and record the undesired broadband audio magnetic signal (undesired ABM field) with no audio signal applied (or digital zero applied, if appropriate) using the specified spectral weighting, the half-band integrator followed by the temporal weighting.
h. Calculate and record the location and number of the measurement points that satisfy both the minimum desired ABM signal level and the maximum undesired ABM field level specified in ANSI 63.19-2019 section 6.6.2. Compare this to the requirements in ANSI 63.19-2019 section 6.6.4 and record the result.
i. Calculate and record the location and number of the measurement points that satisfy the maximum undesired ABM field level and distribution requirements specified in ANSI 63.19-2019 section 6.6.4.

Test Setup Diagram for GSM/UMTS/VoLTE/VoWiFi/VoNR

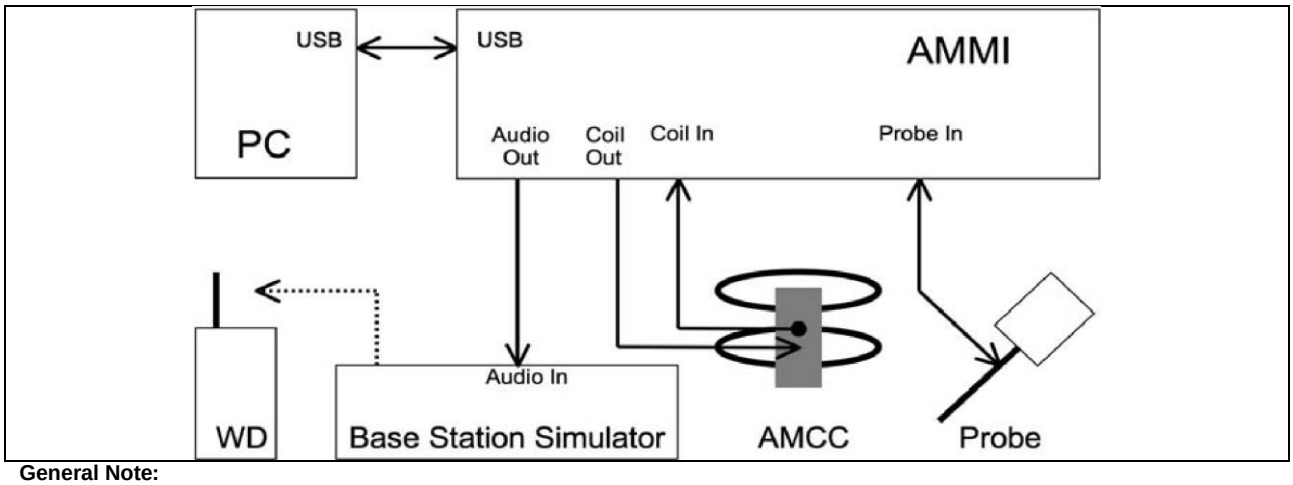

General Note:

1. Define the all applicable input audio level as below according to ANSI63.19-2019 table 6.1:
   - GSM input level: -16dBm0
   - UMTS input level: -16dBm0
   - VoLTE input level: -16dBm0
   - VoNR input level: -16dBm0
   - VoWiFi input level: -16dBm0
2. The test setup used for GSM/UMTS is via the callbox of CMW500 for T-coil measurement. The CMW500 input is calibrated and the relation between the analog input voltage and the internal level in dBm0 can be determined. The CMW500 can be manually configured to control the speech input level and ensure that the result is -16dBm0 for GSM/UMTS CMRS Voice connection.
3. Voice over Long-Term Evolution (VoLTE) is a standard for high-speed wireless communication for mobile phones and data terminals — including IoT devices and wearables. It is based on the IP Multimedia Subsystem (IMS) network, with specific profiles for control and media planes of voice service on LTE defined by GSMA in PRD IR.92. This approach results in the voice service (control and media planes) being delivered as data flows within the LTE data bearer. This means that there is no dependency on the legacy circuit-switched voice network to be maintained.
4. The test setup used for VoLTE and VoWiFI over IMS is via the callbox of CMW500 for T-coil measurement. The data application unit of the CMW500 is used to simulate the IP multimedia subsystem server. The CMW500 can be manually configured to control the speech input level and ensure that the result is -16dBm0 for VoLTE, and VoWiFi during the IMS connection.
5. The test setup used for VoNR over IMS is via the callbox of CMX500 for T-coil measurement, The data application unit of the CMX500 was used to simulate the IP multimedia subsystem server. The CMW500 can be manually configured to ensure and control the speech input level result is -16dBm0 for VoNR when the device during the IMS connection.
6. According to KDB 285076 D02, T-Coil testing for VoLTE, VoNR and VoWiFi requires test instrumentation that can (1) for the system to be able to establish an IP call from/to the handset under test, (2) through an IMS (IP Multimedia Subsystem) and SIP/IP server, (3) to an analog audio adapter containing the permissible set of codecs used by the device under test, and (4) inject the necessary C63.19 test tones at the average speech level for the measurement The test setup is illustrated above Figure. The R&S CMW500 and CMX500 was used as system simulator for VoLTE, VoNR and VoWiFi T-Coil testing. The DAU (Data Application Unit) in CMW500, CMX500 integrates IMS and SIP/IP server that can establish VoLTE, VoNR and Wi-Fi calling, and transport the test tones from AMMI (Audio Magnetic Measuring Instrument) to EUT.

<Example define the input level for GSM/UMTS/VoLTE/VoNR/VoWiFi>

Gain Value	dBm0	Full scal Voltage	dB	AMMI audio out dBv (RMS)	AMCC Coil Out (dBv (RMS)
	3.14	1.5		0.51	
100	5.61		40	2.98	3.13
8.31	-16		18.39		-18.48
Signal Type	**Duration (s)**	**Peak to RMS (dB)**	**RMS (dB)**	**Gain Factor**	**Gain Setting**
1kHz sine	-	3	0	1	8.31
48k_voice_1kHz	1	16.2	-12.7	4.33	35.98
48k_voice_300-3000	2	21.6	-18.6	8.48	70.46

Test Setup Diagram for OTT Voice Calling

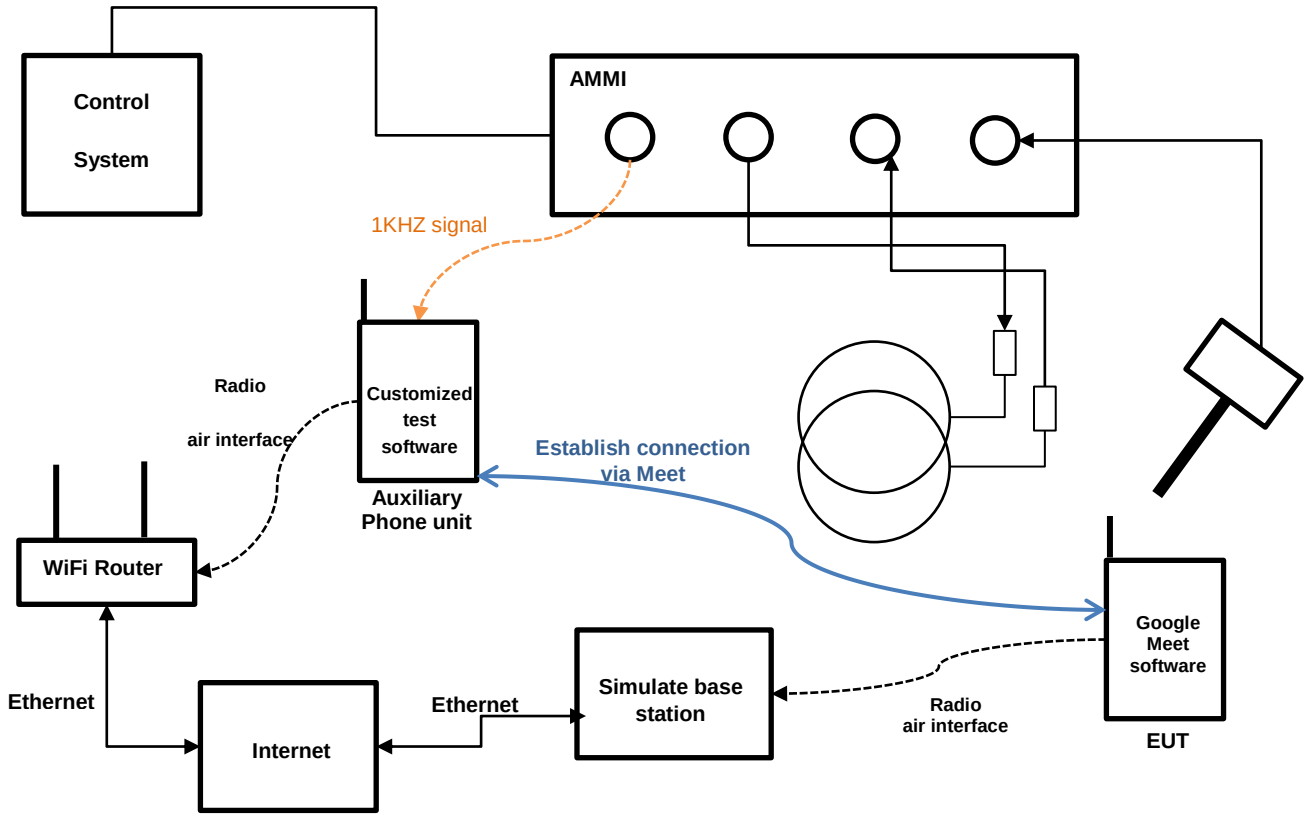

General Note:

1. Define the all applicable input audio level as below according to KDB 285076 D02:
   - OTT Voice calling input Level: -20dBm0
2. OTT voice, such as that enabled when a user opts to communicate in a voice-only mode using the Google Meet application, is a methodology and group of technologies for the delivery of voice communications and multimedia sessions over the internet. The terms Internet telephony, broadband telephony, and broadband phone service specifically refer to the provisioning of communications services (voice, fax, SMS, voice-messaging) over the public Internet, rather than via the public switched telephone network (PSTN).
3. Google Meet application support code and bitrate are listed in section 9, and the customized Google Meet software is installed on a mobile phone that is used as the Auxiliary for the test. The software enables the audio coding rate to be changed, and reports the input digital audio level before audio processing, which can be used to calibrate the input audio level.
4. This device comes with the preinstalled OTT application that supports the voice-only communication option on the Google Meet application and related codec. The test configuration establishes a call between the device under test and an auxiliary handset via Google Meet server.
5. The test setup used for Google Meet OTT voice-only communication is via the data application unit on the simulate base station, connected to the internet via the Google Meet server to the auxiliary device. The auxiliary device runs special software that allows the codecs and bit rate to be fixed to a specific value. Please refer to section 9. An assessment was made of each of the different codec bit rates to determine the worst case for each different OTT transport (WiFi, LTE, GSM, WCDMA, NR).
6. The auxiliary device includes software that displays the audio level in dBFS, which allows calibration of the system to establish the -20dBm0 reference level. After establishing the voice-only communication between auxiliary device and device under test, the audio output from the AMMI is injected into the auxiliary device. The gain factor to establish a reference level of -20dBm0 for use during the test is determined as detailed in the next page based on the 0dBFull Scale (0dBFS) value being equivalent to 3.14dBm0.

<Define the input level for OTT Voice Calling>

1. The Required gain factor for the specific signal shall typically be multiplied by this factor to achieve approx. the same level as for the 1kHz sine signal
2. The below calculation formula is an example and showing how to determine the input level for the device.
3. Input a gain value to readout the -23dBFS level as reference. (0dBFS = 3.14 dBm0)
4. Adjust gain level until to readout the dBFS level until it changes to -24dBFS.
5. Based on the step 1 and 2, and then calculate the gain value(dB) by interpolation to get the -20dBm0 corresponding gain value.

The predefined signal types have the following differences / factors compared to the 1kHz sine signal:

Signal [file name]	Duration [s]	Peak-to-RMS [dB]	RMS [dB]	Required gain factor *)	Gain setting
1kHz sine	---	3.0	0.0	1.00	
48k_1.025kHz_10s.wav	10	3.0	0.0	1.00	
48k_1kHz_3.15kHz_10s.wav	10	6.0	-3.0	1.42	
48k_315Hz_1kHz_10s.wav	10	6.0	-2.9	1.40	
48k_csek_8k_441_white_10s.wav	10	13.8	-10.5	3.34	
48k_multisine_50-5000_10s.wav	10	11.1	-7.9	2.49	
48k_voice_1kHz_1s.wav	1	16.2	-12.7	4.33	
48k_voice_300-3000_2s.wav	2	21.6	-18.6	8.48	

(*) The gain for the specific signal shall typically be multiplied by this factor to acheive approx. the same level as for the 1kHz sine signal.

Insert the gain applicable for your setup in the last column of the table.

Step	Signal type	Audio out		Target Level	
		Gain value	Gain value (dB)	dBFS	dBm0
Step 1	1KHz Sine	7.7	17.73 (Ref.)	-23	
Step 2	1KHz Sine	6.8	16.65	-24	
Step 3	1KHz Sine	7.57**	17.58*	-23.14	-20
Remark	(*) Based on the step 1 and 2 and then via interpolation to get this value. (**) Gain value=10^Gain value(dB)/20				

Signal type	Duration (s)	Peak to RMS (dB)	RMS (dB)	Gain Factor	Gain value
1kHz sine		3	0	1	7.57
48k_voice_1kHz_1s.wav	1	16.2	-12.7	4.33	32.77
48k_voice_300-3000_2s.wav	2	21.6	-18.6	8.48	64.79

1. According to the gain setting for 1kHz sine wave, determine the gain setting for signals above.
2. The gain for the specific signal is multiplied by this factor to achieve the same level as for the 1kHz sine signal.

7. Test Equipment List

Manufacturer	Name of Equipment	Type/Model	Serial Number	Calibration	
				Last Cal.	Due Date
SPEAG	Audio Magnetic 1D Field Probe	AM1DV3	3130	Aug. 21, 2023	Aug. 20, 2024
SPEAG	Audio Magnetic 1D Field Probe	AM1DV3	3104	Mar. 16, 2023	Mar. 15, 2024
SPEAG	Data Acquisition Electronics	DAE4	661	May. 23, 2023	May. 22, 2024
SPEAG	Data Acquisition Electronics	DAE4	699	Feb. 22, 2023	Feb. 21, 2024
SPEAG	Audio Magnetic Calibration Coil	AMCC	1049	NCR	NCR
SPEAG	Audio Measuring Instrument	AMMI	1041	NCR	NCR
Testo	Hygro meter	608-H1	45196600	Nov. 02, 2022	Nov. 01, 2023
R&S	Wideband Radio Communication Tester	CMW500	169351	Oct. 18, 2022	Oct. 17, 2023
R&S	Wideband Radio Communication Tester	CMX500	101931	Sep. 12, 2023	Sep. 11, 2024
SPEAG	Test Arch Phantom	N/A	N/A	NCR	NCR
SPEAG	Phone Positioner	N/A	N/A	NCR	NCR

Note:

1. NCR: “No-Calibration Required”

8. T-Coil testing for CMRS Voice

General Note:

1. Phone Condition: Mute on; Backlight off; Max Volume
2. Codec Investigation: For a voice service/air interface, investigate the variations of codec configurations (WB, NB bit rate) and document the parameters (ABM1, ABM2, S+N/N, frequency response) for that voice service. It is only necessary to document this for one channel/band, the following worst investigation codec would be remarked to be used for the testing for the handset.
3. Air Interface Investigation:
   a. Through Internal radio configuration investigation (e.g. bandwidth, modulation data rate, subcarrier spacings, and resource blocks) that the worst radio configuration was document as below table.
   b. Use the worst-case codec test and document a limited set of bands/channel/bandwidths.
   c. According to the ANSI C63.19-2019 section 6.3.3, using a frequency near the center of the frequency band perform T-coil evaluation.

8.1 GSM Evaluation Results

<Codec Investigation>

Codec	AMR NB FR	AMR WB FR	GSM EFR (FR V2)	Orientation	Band / Channel
Primary Group Contiguous Point Count	130	161	151	Transversal (Y)	GSM850 / 189
Secondary Group Contiguous Point Count	533	554	554		
Secondary Group Max Longitudinal	24	24	24		
Secondary Group Max Transverse	26	26	26		
Frequency Response	PASS	PASS	PASS		

<Air Interface Investigation>

Plot No.	Air Interface	Modulation / Mode	Channel	Probe Position	Primary Group Contiguous Point Count	Secondary Group Contiguous Point Count	Secondary Group Max Longitudinal	Secondary Group Max Transverse	Frequency Response	Ambient Noise dB (A/m)
1	GSM850	Voice	189	Transversal (Y)	130	553	24	26	Pass	-50.42
2	GSM1900	Voice	661	Transversal (Y)	146	552	24	26	Pass	-50.44

8.2 UMTS Evaluation Results

<Codec Investigation>

Codec	NB AMR 4.75Kbps	WB AMR 6.60Kbps	NB AMR 12.2Kbps	WB AMR 23.85Kbps	Orientation	Band / BW / Channel
Primary Group Contiguous Point Count	174	181	186	202	Transversal (Y)	WCDMA II / 9400
Secondary Group Contiguous Point Count	625	625	629	626		
Secondary Group Max Longitudinal	26	26	26	26		
Secondary Group Max Transverse	26	26	26	26		
Frequency Response	PASS	PASS	PASS	PASS		

<Air Interface Investigation>

Plot No.	Air Interface	Modulation / Mode	Channel	Probe Position	Primary Group Contiguous Point Count	Secondary Group Contiguous Point Count	Secondary Group Max Longitudinal	Secondary Group Max Transverse	Frequency Response	Ambient Noise dB (A/m)
3	WCDMA II	Voice	9400	Transversal (Y)	174	625	26	26	Pass	-50.52
4	WCDMA IV	Voice	1413	Transversal (Y)	180	626	26	26	Pass	-50.48
5	WCDMA V	Voice	4182	Transversal (Y)	177	624	26	26	Pass	-50.38

8.3 VoLTE Evaluation Results

<Codec Investigation>

LTE FDD

Codec	NB AMR 4.75Kbps	WB AMR 6.60Kbps	NB AMR 12.2Kbps	WB AMR 23.85Kbps	EVS SWB 9.6Kbps	EVS SWB 24.4Kbps	EVS WB 5.9Kbps	EVS WB 24.4Kbps	EVS NB 5.9Kbps	EVS NB 24.4Kbps	Orientation	Band / BW / Channel
Primary Group Contiguous Point Count	183	188	182	212	202	204	139	203	172	185	Transversal (Y)	B7 / 20M / 21100
Secondary Group Contiguous Point Count	624	626	619	621	625	629	624	626	626	627		
Secondary Group Max Longitudinal	26	26	26	26	26	26	26	26	26	26		
Secondary Group Max Transverse	26	26	26	26	26	26	26	26	26	26		
Frequency Response	Pass	Pass	Pass	Pass	Pass	Pass	Pass	Pass	Pass	Pass		

LTE TDD

Codec	NB AMR 4.75Kbps	WB AMR 6.60Kbps	NB AMR 12.2Kbps	WB AMR 23.85Kbps	EVS SWB 9.6Kbps	EVS SWB 24.4Kbps	EVS WB 5.9Kbps	EVS WB 24.4Kbps	EVS NB 5.9Kbps	EVS NB 24.4Kbps	Orientation	Band / BW / Channel
Primary Group Contiguous Point Count	178	178	177	189	191	200	139	197	168	180	Transversal (Y)	B41 / 20M / 40620
Secondary Group Contiguous Point Count	617	609	612	611	616	611	611	611	605	609		
Secondary Group Max Longitudinal	26	26	26	26	26	26	26	26	26	26		
Secondary Group Max Transverse	26	26	26	26	26	26	26	26	26	26		
Frequency Response	Pass	Pass	Pass	Pass	Pass	Pass	Pass	Pass	Pass	Pass		

<Air Interface Investigation>

Plot No.	Air Interface	BW (MHz)	Modulation / Mode	RB Size	RB offset	Channel	Probe Position	Primary Group Contiguous Point Count	Secondary Group Contiguous Point Count	Secondary Group Max Longitudinal	Secondary Group Max Transverse	Frequency Response	Ambient Noise dB (A/m)
6	LTE Band 2	20M	QPSK	1	0	18900	Transversal (Y)	152	616	26	26	Pass	-50.47
7	LTE Band 5	10M	QPSK	1	0	20525	Transversal (Y)	164	631	26	26	Pass	-50.53
8	LTE Band 7	20M	QPSK	1	0	21100	Transversal (Y)	139	624	26	26	Pass	-50.50
9	LTE Band 12	10M	QPSK	1	0	23095	Transversal (Y)	140	620	26	26	Pass	-50.46
10	LTE Band 41	20M	QPSK	1	0	40620	Transversal (Y)	139	611	26	26	Pass	-50.52
11	LTE Band 66	20M	QPSK	1	0	132322	Transversal (Y)	150	622	26	26	Pass	-50.49

8.4 VoNR Evaluation Results

<Codec Investigation>

5G NR FDD

Codec	NB AMR 4.75Kbps	WB AMR 6.60Kbps	NB AMR 12.2Kbps	WB AMR 23.85Kbps	EVS SWB 9.6Kbps	EVS SWB 24.4Kbps	EVS WB 5.9Kbps	EVS WB 24.4Kbps	EVS NB 5.9Kbps	EVS NB 24.4Kbps	Orientation	Band / BW / Channel
Primary Group Contiguous Point Count	186	191	192	208	198	195	149	205	170	186	Transversal (Y)	n2/ 20M / 376000
Secondary Group Contiguous Point Count	638	638	638	636	630	626	637	636	629	632		
Secondary Group Max Longitudinal	26	26	26	26	26	26	26	26	26	26		
Secondary Group Max Transverse	26	26	26	26	26	26	26	26	26	26		
Frequency Response	Pass	Pass	Pass	Pass	Pass	Pass	Pass	Pass	Pass	Pass		

5G NR TDD

Codec	NB AMR 4.75Kbps	WB AMR 6.60Kbps	NB AMR 12.2Kbps	WB AMR 23.85Kbps	EVS SWB 9.6Kbps	EVS SWB 24.4Kbps	EVS WB 5.9Kbps	EVS WB 24.4Kbps	EVS NB 5.9Kbps	EVS NB 24.4Kbps	Orientation	Band / BW / Channel
Primary Group Contiguous Point Count	206	166	166	192	193	183	144	194	171	177	Transversal (Y)	n41/ 100M / 518598
Secondary Group Contiguous Point Count	627	605	606	613	617	607	618	620	617	619		
Secondary Group Max Longitudinal	26	26	26	26	26	26	26	26	26	26		
Secondary Group Max Transverse	26	26	26	26	26	26	26	26	26	26		
Frequency Response	Pass	Pass	Pass	Pass	Pass	Pass	Pass	Pass	Pass	Pass		

<Air Interface Investigation>

Plot No.	Air Interface	BW (MHz)	Modulation / Mode	RB Size	RB offset	Channel	Probe Position	Primary Group Contiguous Point Count	Secondary Group Contiguous Point Count	Secondary Group Max Longitudinal	Secondary Group Max Transverse	Frequency Response	Ambient Noise dB (A/m)
12	FR1 n2	20M	BPSK	1	1	376000	Transversal (Y)	149	637	26	26	Pass	-50.42
13	FR1 n5	20M	BPSK	1	1	167300	Transversal (Y)	194	618	26	26	Pass	-50.34
14	FR1 n7	50M	BPSK	1	1	507000	Transversal (Y)	191	612	26	26	Pass	-50.55
15	FR1 n12	15M	BPSK	1	1	141500	Transversal (Y)	201	622	26	26	Pass	-50.49
16	FR1 n41	100M	BPSK	1	1	518598	Transversal (Y)	144	618	26	26	Pass	-50.31
17	FR1 n66	40M	BPSK	1	1	349000	Transversal (Y)	208	629	26	26	Pass	-50.49
18	FR1 n77	100M	BPSK	1	1	656000	Transversal (Y)	128	614	26	26	Pass	-50.31

8.5 VoWiFi Evaluation Results

<Codec Investigation>

Codec	NB AMR 4.75Kbps	WB AMR 6.60Kbps	NB AMR 12.2Kbps	WB AMR 23.85Kbps	EVS SWB 9.6Kbps	EVS SWB 24.4Kbps	EVS WB 5.9Kbps	EVS WB 24.4Kbps	EVS NB 5.9Kbps	EVS NB 24.4Kbps	Orientation	Band / BW / Channel
Primary Group Contiguous Point Count	209	219	225	253	230	219	160	233	197	211	Transversal (Y)	2.4GHz WLAN / 6
Secondary Group Contiguous Point Count	666	672	673	669	667	660	664	674	668	671		
Secondary Group Max Longitudinal	26	26	26	26	26	26	26	26	26	26		
Secondary Group Max Transverse	26	26	26	26	26	26	26	26	26	26		
Frequency Response	Pass	Pass	Pass	Pass	Pass	Pass	Pass	Pass	Pass	Pass		

<Air Interface Investigation>

Plot No.	Air Interface	Modulation / Mode	Channel	Probe Position	Primary Group Contiguous Point Count	Secondary Group Contiguous Point Count	Secondary Group Max Longitudinal	Secondary Group Max Transverse	Frequency Response	Ambient Noise dB (A/m)
19	WLAN2.4GHz	802.11b 1Mbps	6	Transversal (Y)	160	664	26	26	Pass	-50.43
20	WLAN5GHz	802.11a 6Mbps	40	Transversal (Y)	153	650	26	26	Pass	-50.37
21	WLAN5GHz	802.11a 6Mbps	60	Transversal (Y)	136	612	26	26	Pass	-50.51
22	WLAN5GHz	802.11a 6Mbps	116	Transversal (Y)	147	617	26	26	Pass	-50.49
23	WLAN5GHz	802.11a 6Mbps	157	Transversal (Y)	137	643	26	26	Pass	-50.35
24	WLAN5GHz	802.11a 6Mbps	173	Transversal (Y)	154	663	26	26	Pass	-50.52
25	WLAN6GHz	802.11ax-HE20	5	Transversal (Y)	160	662	26	26	Pass	-50.50

9. T-Coil testing for OTT Voice Calling

General Notes:

1. According to the ANSI C63.19-2019 section 6.3.3, using a frequency near the center of the frequency band perform T-coil evaluation.
2. Phone Condition: Mute on; Backlight off; Max Volume
3. The device supported a pre-installed application, Google Meet, whose features allow the option of voice-only communications. According to KDB 285076 D02, all air interfaces via a data connection with an application providing voice functionality need to be considered for HAC testing.
4. Google Meet only support OPUS audio codec and support 6Kbps to 75Kbps bitrate.
5. The test setup used for OTT Voice call is the DUT connect to the CMW500/CMX500 and via the data application unit on CMW500/CMX500 connection to the Internet, the Auxiliary EUT is connected to the WiFi access point, the channel/Modulation/Frequency bands/data rate is configured on the CMW500/CMX500 for the DUT unit. For the Auxiliary OTT unit which is used to configure the audio codec rate and determine the audio input level of -20dBm0 based on the KDB 285076 D02 requirement.
6. Codec Investigation: For a voice service/air interface, investigate the variations of codec configurations (WB, NB bit rate) and document the parameters (ABM1, ABM2, S+N/N, frequency response) for that voice service. It is only necessary to document this for one channel/band, the following tests results which the worst case codec would be remarked to be used for the testing for the handset.
7. Air Interface Investigation:
   a. Through Internal radio configuration investigation (e.g. bandwidth, modulation data rate, subcarrier spacing, and resource blocks) that the worst radio configuration was document as below table.
   b. Use the worst-case codec test and document a limited set of bands/channel/bandwidths.
   c. OTT service and CMRS IP service are established over the internet protocol for the voice service, and on both services the identical RF air interface is used for LTE, WIFI and NR. Therefore, according to VoLTE, VoWiFi and VoNR test results from the air interface investigation, the worst configuration and frequency band of the air interface is used for OTT T-Coil testing.
   -LTE FDD worst configuration and band: LTE Band 7/20MHz/QPSK/1RB Size
   -LTE TDD worst configuration and band: LTE Band 41/20MHz/QPSK/1RB Size
   -NR FDD worst configuration and band: NR n2/40MHz/DFT-PI/2 BPSK/1RB Size
   -NR TDD worst configuration and band: NR n77/40MHz/DFT-PI/2 BPSK/1RB Size
   -WLAN DTS worst configuration: 802.11b/1Mbps
   -WLAN NII worst configuration and Band: WLAN 5.2GHz/11a/6Mbps

<Codec Investigation>

EDGE

Codec	Opus 6kbps	Opus 40kbps	Opus 75kbps	Orientation	Band / Channel
Primary Group Contiguous Point Count	275	214	264	Transversal (Y)	GSM850 / 189
Secondary Group Contiguous Point Count	625	586	608		
Secondary Group Max Longitudinal	26	26	26		
Secondary Group Max Transverse	26	26	26		
Frequency Response	Pass	Pass	Pass		

HSPA

Codec	Opus 6kbps	Opus 40kbps	Opus 75kbps	Orientation	Band / BW / Channel
Primary Group Contiguous Point Count	180	177	192	Transversal (Y)	WCDMA II / 9400
Secondary Group Contiguous Point Count	532	528	536		
Secondary Group Max Longitudinal	26	26	26		
Secondary Group Max Transverse	26	26	26		
Frequency Response	Pass	Pass	Pass		

LTE FDD

Codec	Opus 6kbps	Opus 40kbps	Opus 75kbps	Orientation	Band / BW / Channel
Primary Group Contiguous Point Count	196	188	216	Transversal (Y)	B7 / 20M / 21100
Secondary Group Contiguous Point Count	534	529	553		
Secondary Group Max Longitudinal	26	26	26		
Secondary Group Max Transverse	26	26	26		
Frequency Response	Pass	Pass	Pass		

LTE TDD

Codec	Opus 6kbps	Opus 40kbps	Opus 75kbps	Orientation	Band / BW / Channel
Primary Group Contiguous Point Count	247	245	246	Transversal (Y)	B41 / 20M / 40620
Secondary Group Contiguous Point Count	592	582	586		
Secondary Group Max Longitudinal	26	26	26		
Secondary Group Max Transverse	26	26	26		
Frequency Response	Pass	Pass	Pass		

WLAN

Codec	Opus 6kbps	Opus 40kbps	Opus 75kbps	Orientation	Band / Channel
Primary Group Contiguous Point Count	245	242	136	Transversal (Y)	2.4GHz WLAN / 6
Secondary Group Contiguous Point Count	572	568	535		
Secondary Group Max Longitudinal	26	26	26		
Secondary Group Max Transverse	26	26	26		
Frequency Response	Pass	Pass	Pass		

5G NR FDD

Codec	Opus 6kbps	Opus 40kbps	Opus 75kbps	Orientation	Band / BW / Channel
Primary Group Contiguous Point Count	244	175	176	Transversal (Y)	n2/ 20M / 376000
Secondary Group Contiguous Point Count	571	533	535		
Secondary Group Max Longitudinal	26	26	26		
Secondary Group Max Transverse	26	26	26		
Frequency Response	Pass	Pass	Pass		

5G NR TDD

Codec	Opus 6kbps	Opus 40kbps	Opus 75kbps	Orientation	Band / BW / Channel
Primary Group Contiguous Point Count	313	312	163	Transversal (Y)	n77/ 100M / 656000
Secondary Group Contiguous Point Count	617	616	522		
Secondary Group Max Longitudinal	26	26	26		
Secondary Group Max Transverse	26	26	26		
Frequency Response	Pass	Pass	Pass		

<Air Interface Investigation>

Plot No.	Air Interface	Modulation / Mode	Channel	Probe Position	Primary Group Contiguous Point Count	Secondary Group Contiguous Point Count	Secondary Group Max Longitudinal	Secondary Group Max Transverse	Frequency Response	Ambient Noise dB (A/m)
26	GSM850	EDGE 2 Tx slots	189	Transversal (Y)	214	586	26	26	Pass	-50.52
27	GSM1900	EDGE 2 Tx slots	661	Transversal (Y)	115	485	26	26	Pass	-50.53
28	WCDMA II	HSPA	9400	Transversal (Y)	177	528	26	26	Pass	-50.37
29	WCDMA IV	HSPA	1413	Transversal (Y)	166	529	26	26	Pass	-50.31
30	WCDMA V	HSPA	4182	Transversal (Y)	152	529	26	26	Pass	-50.55
31	LTE Band 7	20M_QPSK_1_0	21100	Transversal (Y)	188	529	26	26	Pass	-50.51
32	LTE Band 41	20M_QPSK_1_0	40620	Transversal (Y)	245	582	26	26	Pass	-50.39
33	FR1 n2	20M_DFT-PI/2 BPSK_1_1	376000	Transversal (Y)	175	533	26	26	Pass	-50.56
34	FR1 n77	100M_DFT-PI/2 BPSK_1_1	656000	Transversal (Y)	163	522	26	26	Pass	-50.58
35	WLAN2.4GHz	802.11b 1Mbps	6	Transversal (Y)	136	535	26	26	Pass	-50.37
36	WLAN5GHz	802.11a 6Mbps	60	Transversal (Y)	120	481	26	26	Pass	-50.30

Test Engineer：White Huang, Wilson Lin and Charles Shen

10. Uncertainty Assessment

The evaluation of uncertainly by the statistical analysis of a series of observations is termed a Type A evaluation of uncertainty. The evaluation of uncertainty by means other than the statistical analysis of a series of observation is termed a Type B evaluation of uncertainty. Each component of uncertainty, however evaluated, is represented by an estimated standard deviation, termed standard uncertainty, which is determined by the positive square root of the estimated variance. The combined standard uncertainty of the measurement result represents the estimated standard deviation of the result. It is obtained by combining the individual standard uncertainties of both Type A and Type B evaluation using the usual "root-sum-squares" (RSS) methods of combining standard deviations by taking the positive square root of the estimated variances. Expanded uncertainty is a measure of uncertainty that defines an interval about the measurement result within which the measured value is confidently believed to lie. It is obtained by multiplying the combined standard uncertainty by a coverage factor. For purpose of this document, a coverage factor two is used, which corresponds to confidence interval of about 95 %. The DASY uncertainty Budget is showed in Table 8.2.
The judgment of conformity in the report is based on the measurement results excluding the measurement uncertainty.

Error Description	Uncertainty Value (±%)	Probability Distribution	Divisor	Ci (ABM1)	Ci (ABM2)	Standard Uncertainty (ABM1)	Standard Uncertainty (ABM2)
Probe Sensitivity							
Reference Level	3.0	Normal	1	1	1	± 3.0 %	± 3.0 %
AMCC Geometry	0.4	Rectangular	√3	1	1	± 0.2 %	± 0.2 %
AMCC Current	1.0	Rectangular	√3	1	1	± 0.6 %	± 0.6 %
Probe Positioning During Calibrate	0.1	Rectangular	√3	1	1	± 0.1 %	± 0.1 %
Noise Contribution	0.7	Rectangular	√3	0.0143	1	± 0.0 %	± 0.4 %
Frequency Slope	5.9	Rectangular	√3	0.1	1	± 0.3 %	± 3.5 %
Probe System							
Repeatability / Drift	1.0	Rectangular	√3	1	1	± 0.6 %	± 0.6 %
Linearity / Dynamic Range	0.6	Rectangular	√3	1	1	± 0.4 %	± 0.4 %
Acoustic Noise	1.0	Rectangular	√3	0.1	1	± 0.1 %	± 0.6 %
Probe Angle	2.3	Rectangular	√3	1	1	± 1.4 %	± 1.4 %
Spectral Processing	0.9	Rectangular	√3	1	1	± 0.5 %	± 0.5 %
Integration Time	0.6	Normal	1	1	5	± 0.6 %	± 3.0 %
Field Disturbation	0.2	Rectangular	√3	1	1	± 0.1 %	± 0.1 %
Test Signal							
Reference Signal Spectral Response	0.6	Rectangular	√3	0	1	± 0.0 %	± 0.4 %
Positioning							
Probe Positioning	1.9	Rectangular	√3	1	1	± 1.1 %	± 1.1 %
Phantom Thickness	0.9	Rectangular	√3	1	1	± 0.5 %	± 0.5 %
EUT Positioning	1.9	Rectangular	√3	1	1	± 1.1 %	± 1.1 %
External Contributions							
RF Interference	0.0	Rectangular	√3	1	0.3	± 0.0 %	± 0.0 %
Test Signal Variation	2.0	Rectangular	√3	1	1	± 1.2 %	± 1.2 %
Combined Standard Uncertainty						± 4.1 %	± 6.1 %
Coverage Factor for 95 %						K = 2	
Expanded Uncertainty						± 8.1 %	± 12.3 %
Declaration of Conformity: The test results with all measurement uncertainty excluded are presented in accordance with the regulation limits or requirements declared by manufacturers.							
Comments and Explanations: The declared of product specification for EUT presented in the report are provided by the manufacturer, and the manufacturer takes all the responsibilities for the accuracy of product specification.							

Uncertainty Budget of audio band magnetic measurement

11. References

[1] ANSI C63.19-2019, “American National Standard for Methods of Measurement of Compatibility between Wireless Communications Devices and Hearing Aids”, Aug. 2019.
[2] FCC KDB 285076 D01v06r04, “Equipment Authorization Guidance for Hearing Aid Compatibility”, Sep. 2023.
[3] FCC KDB 285076 D02v04, “Guidance for performing T-Coil tests for air interfaces supporting voice over IP (e.g., LTE and WiFi) to support CMRS based telephone services”, Feb 2022
[4] FCC KDB 285076 D03v01r06, “Hearing aid compatibility frequently asked questions”, Jul. 2022
[5] SPEAG DASY System Handbook