System Check_Head_750MHz

DUT: D750V3-1107

Communication System: CW; Frequency: 750 MHz;Duty Cycle: 1:1
Medium: HSL_750_200629 Medium parameters used: f = 750 MHz; σ = 0.913 S/m; ε_r = 41.797; ρ = 1000 kg/m^3
Ambient Temperature：23.6 ℃; Liquid Temperature：22.6 ℃

DASY5 Configuration:
- Probe: ES3DV3 - SN3270; ConvF(6.55, 6.55, 6.55) @ 750 MHz; Calibrated: 2019/9/25
- Sensor-Surface: 3mm (Mechanical Surface Detection)
- Electronics: DAE4 Sn1399; Calibrated: 2019/11/14
- Phantom: SAM-Middle; Type: SAM; Serial: TP-1503
- Measurement SW: DASY52, Version 52.10 (4);SEMCAD X Version 14.6.14 (7483)

Pin=250mW/Area Scan (61x61x1): Interpolated grid: dx=1.500 mm, dy=1.500 mm
Maximum value of SAR (interpolated) = 2.45 W/kg

Pin=250mW/Zoom Scan (5x5x7)/Cube 0: Measurement grid: dx=8mm, dy=8mm, dz=5mm
Reference Value = 51.34 V/m; Power Drift = 0.03 dB
Peak SAR (extrapolated) = 3.04 W/kg
SAR(1 g) = 2.12 W/kg; SAR(10 g) = 1.44 W/kg
Maximum value of SAR (measured) = 2.45 W/kg

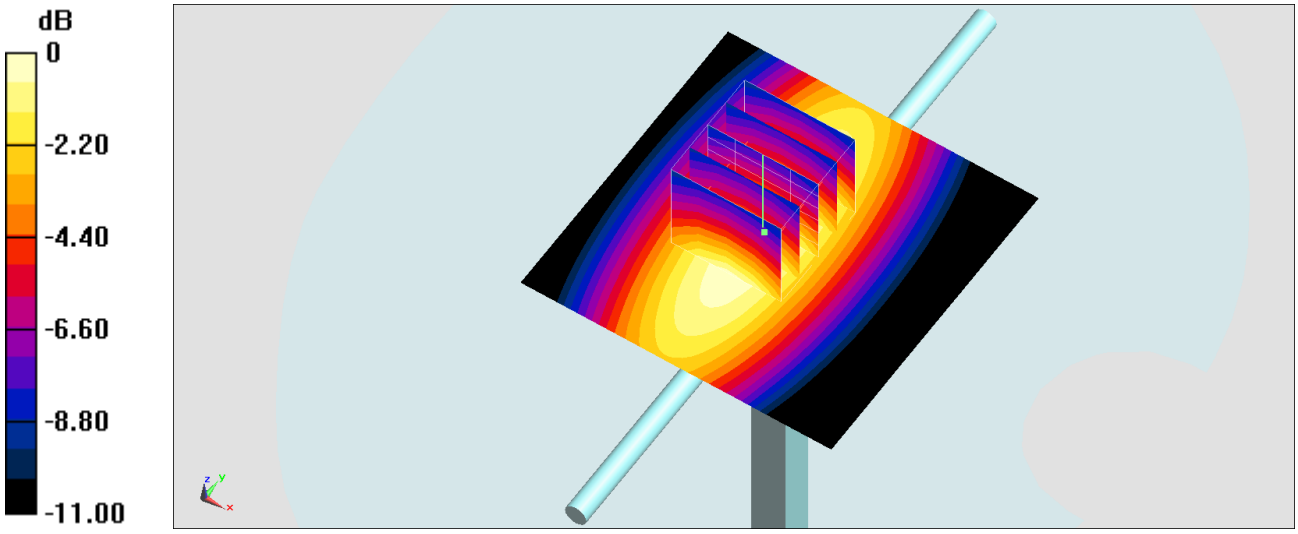

0 dB = 2.45 W/kg = 3.89 dBW/kg

System Check_Head_750MHz

DUT: D750V3-1107

Communication System: CW; Frequency: 750 MHz;Duty Cycle: 1:1
Medium: HSL_750_200630 Medium parameters used: f = 750 MHz; σ = 0.915 S/m; ε_r = 41.998; ρ = 1000 kg/m^3
Ambient Temperature：23.2 ℃; Liquid Temperature：22.2 ℃

DASY5 Configuration:
- Probe: ES3DV3 - SN3270; ConvF(6.55, 6.55, 6.55) @ 750 MHz; Calibrated: 2019/9/25
- Sensor-Surface: 3mm (Mechanical Surface Detection)
- Electronics: DAE4 Sn1399; Calibrated: 2019/11/14
- Phantom: SAM-Middle; Type: SAM; Serial: TP-1503
- Measurement SW: DASY52, Version 52.10 (4);SEMCAD X Version 14.6.14 (7483)

Pin=250mW/Area Scan (61x61x1): Interpolated grid: dx=1.500 mm, dy=1.500 mm
Maximum value of SAR (interpolated) = 2.65 W/kg

Pin=250mW/Zoom Scan (5x5x7)/Cube 0: Measurement grid: dx=8mm, dy=8mm, dz=5mm
Reference Value = 55.50 V/m; Power Drift = -0.12 dB
Peak SAR (extrapolated) = 3.13 W/kg
SAR(1 g) = 2.14 W/kg; SAR(10 g) = 1.44 W/kg
Maximum value of SAR (measured) = 2.49 W/kg

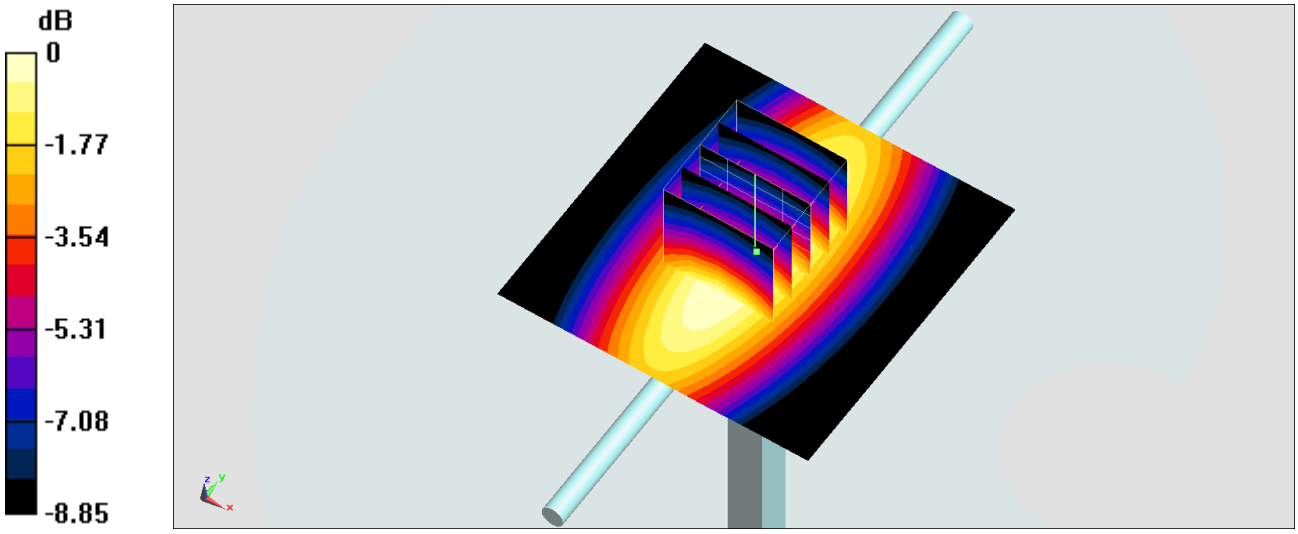

0 dB = 2.49 W/kg = 3.96 dBW/kg

System Check_Head_750MHz

DUT: D750V3-1107

Communication System: CW; Frequency: 750 MHz;Duty Cycle: 1:1
Medium: HSL_750_200701 Medium parameters used: f = 750 MHz; σ = 0.905 S/m; ε_r = 40.878; ρ = 1000 kg/m^3
Ambient Temperature：23.2 ℃; Liquid Temperature：22.2 ℃

DASY5 Configuration:
- Probe: EX3DV4 - SN3728; ConvF(9.67, 9.67, 9.67) @ 750 MHz; Calibrated: 2020/2/4
- Sensor-Surface: 1.4mm (Mechanical Surface Detection)
- Electronics: DAE4 Sn699; Calibrated: 2020/2/26
- Phantom: SAM-Middle; Type: SAM; Serial: TP-1503
- Measurement SW: DASY52, Version 52.10 (4);SEMCAD X Version 14.6.14 (7483)

Pin=250mW/Area Scan (61x61x1): Interpolated grid: dx=1.500 mm, dy=1.500 mm
Maximum value of SAR (interpolated) = 2.88 W/kg

Pin=250mW/Zoom Scan (5x5x7)/Cube 0: Measurement grid: dx=8mm, dy=8mm, dz=5mm
Reference Value = 60.70 V/m; Power Drift = -0.12 dB
Peak SAR (extrapolated) = 3.57 W/kg
SAR(1 g) = 2.12 W/kg; SAR(10 g) = 1.36 W/kg
Maximum value of SAR (measured) = 3.02 W/kg

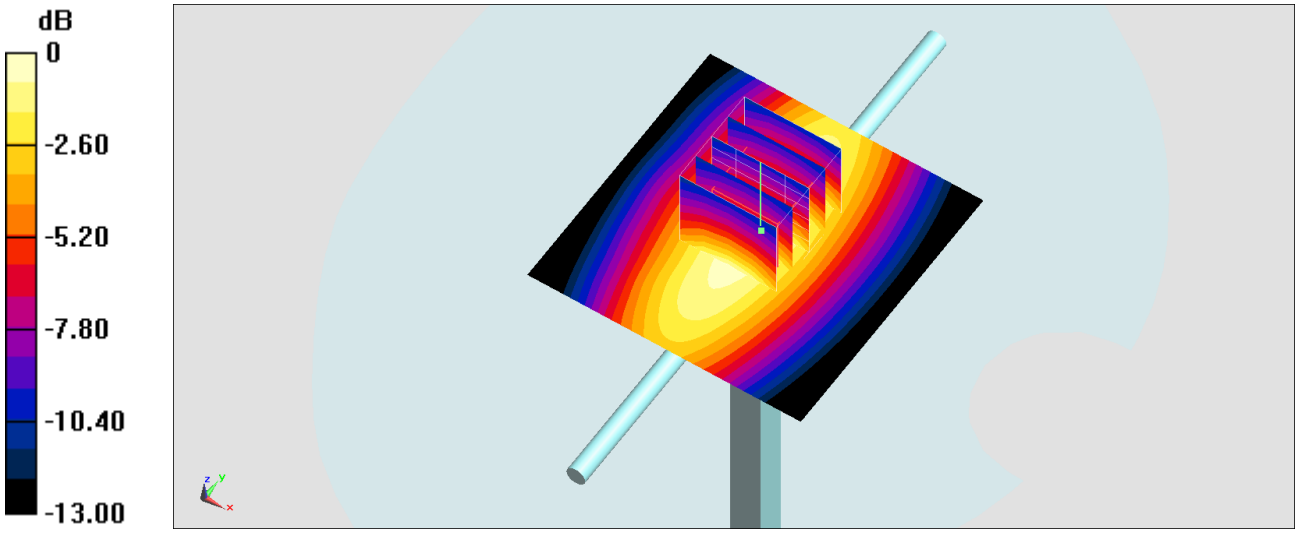

0 dB = 3.02 W/kg = 4.80 dBW/kg

System Check_Head_750MHz

DUT: D750V3-1107

Communication System: CW; Frequency: 750 MHz;Duty Cycle: 1:1
Medium: HSL_750_200704 Medium parameters used: f = 750 MHz; σ = 0.893 S/m; ε_r = 42.767; ρ = 1000 kg/m^3
Ambient Temperature：23.6 ℃; Liquid Temperature：22.6 ℃

DASY5 Configuration:
- Probe: EX3DV4 - SN3728; ConvF(9.67, 9.67, 9.67) @ 750 MHz; Calibrated: 2020/2/4
- Sensor-Surface: 1.4mm (Mechanical Surface Detection)
- Electronics: DAE4 Sn699; Calibrated: 2020/2/26
- Phantom: SAM-Middle; Type: SAM; Serial: TP-1503
- Measurement SW: DASY52, Version 52.10 (4);SEMCAD X Version 14.6.14 (7483)

Pin=250mW/Area Scan (61x61x1): Interpolated grid: dx=1.500 mm, dy=1.500 mm
Maximum value of SAR (interpolated) = 2.75 W/kg

Pin=250mW/Zoom Scan (5x5x7)/Cube 0: Measurement grid: dx=8mm, dy=8mm, dz=5mm
Reference Value = 56.75 V/m; Power Drift = 0.12 dB
Peak SAR (extrapolated) = 3.07 W/kg
SAR(1 g) = 2.13 W/kg; SAR(10 g) = 1.44 W/kg
Maximum value of SAR (measured) = 2.77 W/kg

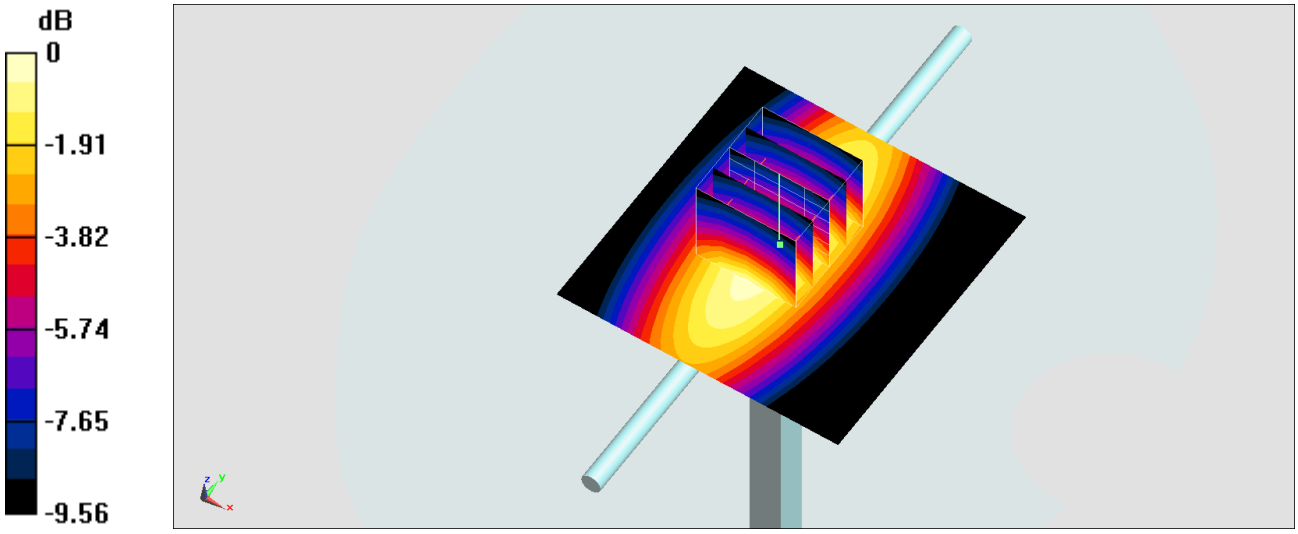

0 dB = 2.77 W/kg = 4.42 dBW/kg

Test Laboratory: Sporton International Inc. SAR/HAC Testing Lab Date: 2020/7/17

System Check_Head_750MHz

DUT: D750V3-1107

Communication System: CW; Frequency: 750 MHz;Duty Cycle: 1:1
Medium: HSL_750_200717 Medium parameters used: f = 750 MHz; σ = 0.894 S/m; ε_r = 41.411; ρ = 1000 kg/m^3
Ambient Temperature：23.2 ℃; Liquid Temperature：22.2 ℃

DASY5 Configuration:
- Probe: ES3DV3 - SN3270; ConvF(6.55, 6.55, 6.55) @ 750 MHz; Calibrated: 2019/9/25
- Sensor-Surface: 3mm (Mechanical Surface Detection)
- Electronics: DAE4 Sn1399; Calibrated: 2020/2/18
- Phantom: SAM_Left; Type: SAM; Serial: 1796
- Measurement SW: DASY52, Version 52.10 (4);SEMCAD X Version 14.6.14 (7483)

Pin=250mW/Area Scan (61x61x1): Interpolated grid: dx=1.500 mm, dy=1.500 mm
Maximum value of SAR (interpolated) = 2.40 W/kg

Pin=250mW/Zoom Scan (5x5x7)/Cube 0: Measurement grid: dx=8mm, dy=8mm, dz=5mm
Reference Value = 51.34 V/m; Power Drift = 0.01 dB
Peak SAR (extrapolated) = 2.98 W/kg
SAR(1 g) = 2.08 W/kg; SAR(10 g) = 1.41 W/kg
Maximum value of SAR (measured) = 2.40 W/kg

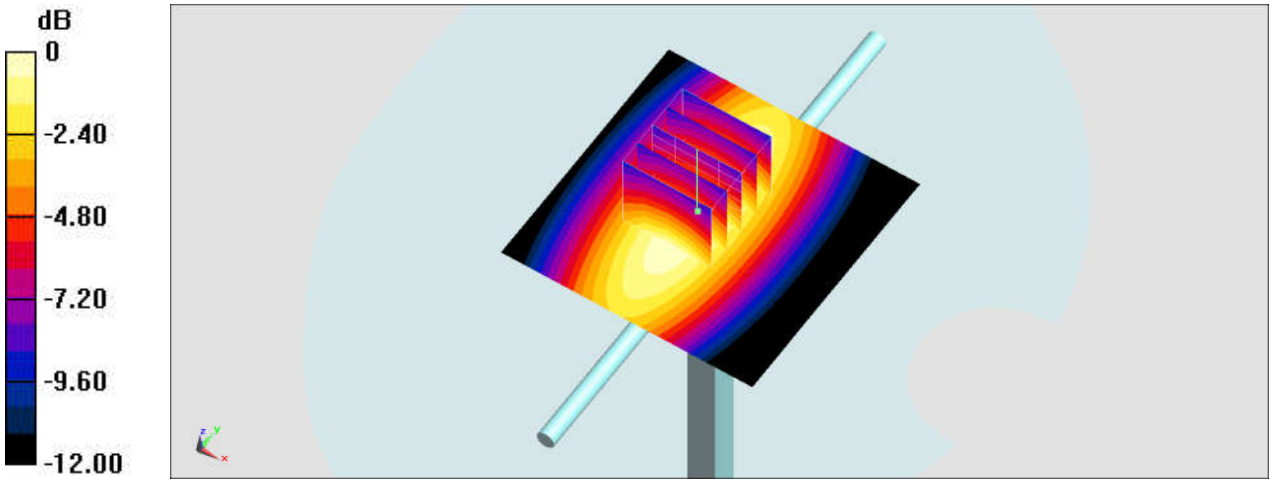

0 dB = 2.40 W/kg = 3.80 dBW/kg

System Check_Head_750MHz

DUT: D750V3-1107

Communication System: CW; Frequency: 750 MHz;Duty Cycle: 1:1
Medium: HSL_750_200718 Medium parameters used: f = 750 MHz; σ = 0.862 S/m; ε_r = 41.816; ρ = 1000 kg/m^3
Ambient Temperature：23.3 ℃; Liquid Temperature：22.3 ℃

DASY5 Configuration:
- Probe: EX3DV4 - SN3728; ConvF(9.67, 9.67, 9.67) @ 750 MHz; Calibrated: 2020/2/4
- Sensor-Surface: 1.4mm (Mechanical Surface Detection)
- Electronics: DAE4 Sn699; Calibrated: 2020/2/26
- Phantom: SAM-Middle; Type: SAM; Serial: TP-1503
- Measurement SW: DASY52, Version 52.10 (4);SEMCAD X Version 14.6.14 (7483)

Pin=250mW/Area Scan (61x61x1): Interpolated grid: dx=1.500 mm, dy=1.500 mm
Maximum value of SAR (interpolated) = 2.65 W/kg

Pin=250mW/Zoom Scan (5x5x7)/Cube 0: Measurement grid: dx=8mm, dy=8mm, dz=5mm
Reference Value = 56.75 V/m; Power Drift = 0.06 dB
Peak SAR (extrapolated) = 2.96 W/kg
SAR(1 g) = 2.06 W/kg; SAR(10 g) = 1.39 W/kg
Maximum value of SAR (measured) = 2.67 W/kg

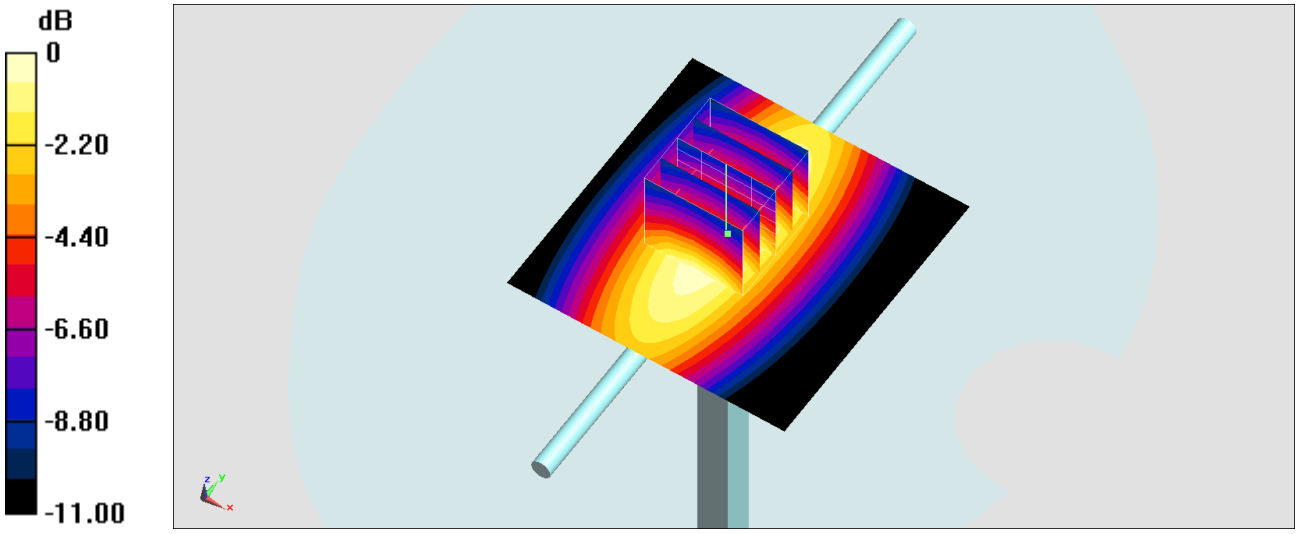

0 dB = 2.67 W/kg = 4.27 dBW/kg

Test Laboratory: Sporton International Inc. SAR/HAC Testing Lab Date: 2020/7/29

System Check_Head_750MHz

DUT: D750V3-1107

Communication System: CW; Frequency: 750 MHz;Duty Cycle: 1:1
Medium: HSL_750_200729 Medium parameters used: f = 750 MHz; σ = 0.879 S/m; ε_r = 40.503; ρ = 1000 kg/m^3
Ambient Temperature：23.2 ℃； Liquid Temperature：22.2 ℃

DASY5 Configuration:
- Probe: EX3DV4 - SN7590; ConvF(11.05, 11.05, 11.05) @ 750 MHz; Calibrated: 2020/4/14
- Sensor-Surface: 1.4mm (Mechanical Surface Detection)
- Electronics: DAE3 Sn577; Calibrated: 2019/9/17
- Phantom: SAM_Right; Type: QD000P40CB; Serial: S/N:1489
- Measurement SW: DASY52, Version 52.10 (4);SEMCAD X Version 14.6.14 (7483)

Pin=250mW/Area Scan (61x61x1): Interpolated grid: dx=1.500 mm, dy=1.500 mm
Maximum value of SAR (interpolated) = 2.77 W/kg

Pin=250mW/Zoom Scan (5x5x7)/Cube 0: Measurement grid: dx=8mm, dy=8mm, dz=5mm
Reference Value = 57.67 V/m; Power Drift = -0.00 dB
Peak SAR (extrapolated) = 3.65 W/kg
SAR(1 g) = 2.09 W/kg; SAR(10 g) = 1.35 W/kg
Maximum value of SAR (measured) = 2.77 W/kg

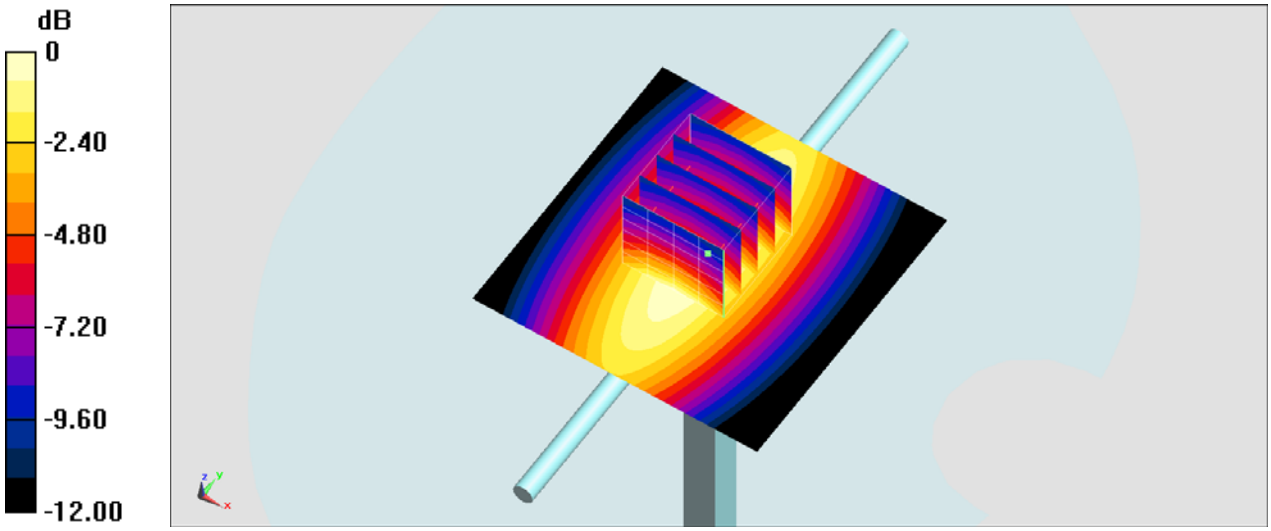

0 dB = 2.77 W/kg = 4.42 dBW/kg

Test Laboratory: Sporton International Inc. SAR/HAC Testing Lab Date: 2020/6/19

System Check_Head_835MHz

DUT: D835V2-4d167

Communication System: CW; Frequency: 835 MHz;Duty Cycle: 1:1
Medium: HSL_850_200619 Medium parameters used: f = 835 MHz; σ = 0.876 S/m; ε_r = 42.492; ρ = 1000 kg/m^3
Ambient Temperature：23.6 ℃; Liquid Temperature：22.6 ℃

DASY5 Configuration:
- Probe: EX3DV4 - SN3728; ConvF(9.51, 9.51, 9.51) @ 835 MHz; Calibrated: 2020/2/4
- Sensor-Surface: 1.4mm (Mechanical Surface Detection)
- Electronics: DAE4 Sn699; Calibrated: 2020/2/26
- Phantom: SAM_Left; Type: SAM; Serial: 1796
- Measurement SW: DASY52, Version 52.10 (4);SEMCAD X Version 14.6.14 (7483)

Pin=250mW/Area Scan (61x61x1): Interpolated grid: dx=1.500 mm, dy=1.500 mm
Maximum value of SAR (interpolated) = 3.11 W/kg

Pin=250mW/Zoom Scan (5x5x7)/Cube 0: Measurement grid: dx=8mm, dy=8mm, dz=5mm
Reference Value = 62.52 V/m; Power Drift = -0.03 dB
Peak SAR (extrapolated) = 4.00 W/kg
SAR(1 g) = 2.3 W/kg; SAR(10 g) = 1.46 W/kg
Maximum value of SAR (measured) = 3.34 W/kg

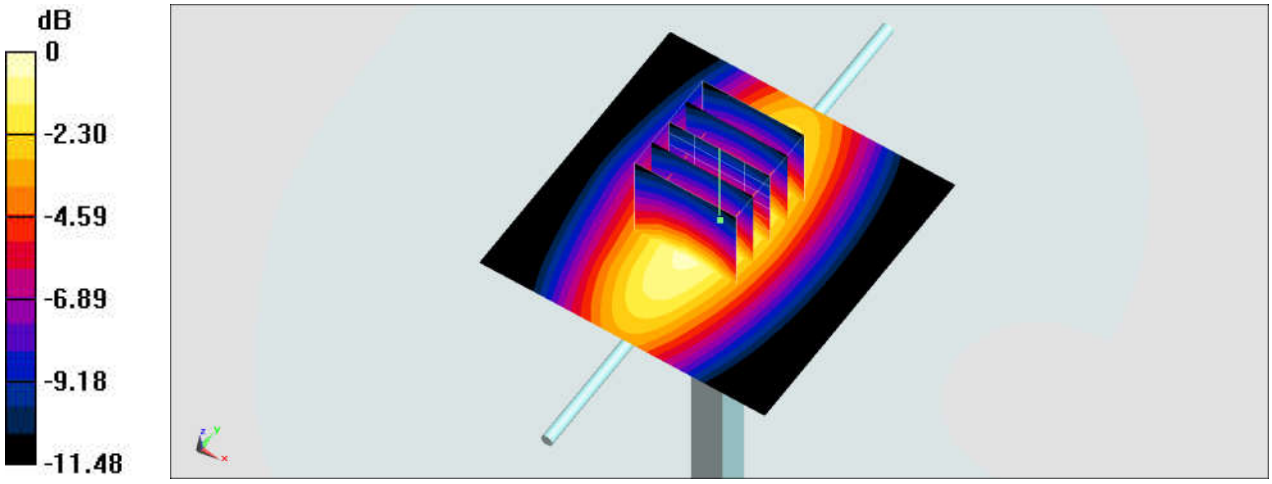

0 dB = 3.34 W/kg = 5.24 dBW/kg

System Check_Head_835MHz

DUT: D835V2-4d167

Communication System: CW ; Frequency: 835 MHz;Duty Cycle: 1:1
Medium: HSL_850_200624 Medium parameters used: f = 835 MHz; σ = 0.912 S/m; ε_r = 42.614; ρ = 1000 kg/m^3
Ambient Temperature：23.5 ℃; Liquid Temperature：22.5 ℃

DASY5 Configuration:
- Probe: ES3DV3 - SN3270; ConvF(6.43, 6.43, 6.43) @ 835 MHz; Calibrated: 2019/9/25
- Sensor-Surface: 3mm (Mechanical Surface Detection)
- Electronics: DAE4 Sn1399; Calibrated: 2019/11/14
- Phantom: SAM-Middle; Type: SAM; Serial: TP-1503
- Measurement SW: DASY52, Version 52.10 (4);SEMCAD X Version 14.6.14 (7483)

Pin=250mW/Area Scan (61x61x1): Interpolated grid: dx=1.500 mm, dy=1.500 mm
Maximum value of SAR (interpolated) = 2.93 W/kg

Pin=250mW/Zoom Scan (5x5x7)/Cube 0: Measurement grid: dx=8mm, dy=8mm, dz=5mm
Reference Value = 58.37 V/m; Power Drift = -0.06 dB
Peak SAR (extrapolated) = 3.73 W/kg
SAR(1 g) = 2.5 W/kg; SAR(10 g) = 1.64 W/kg
Maximum value of SAR (measured) = 2.90 W/kg

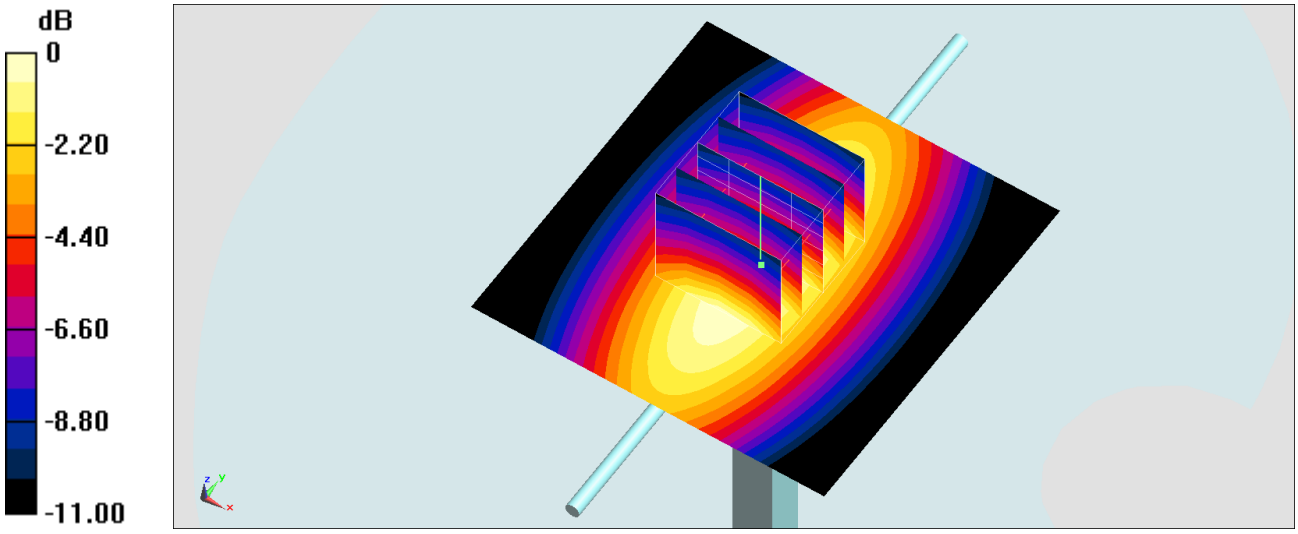

0 dB = 2.90 W/kg = 4.62 dBW/kg

System Check_Head_835MHz

DUT: D835V2-4d167

Communication System: CW ; Frequency: 835 MHz;Duty Cycle: 1:1
Medium: HSL_850_200707 Medium parameters used: f = 835 MHz; σ = 0.89 S/m; ε_r = 41.021; ρ = 1000 kg/m^3
Ambient Temperature：23.5 ℃; Liquid Temperature：22.5 ℃

DASY5 Configuration:
- Probe: EX3DV4 - SN3728; ConvF(9.51, 9.51, 9.51) @ 835 MHz; Calibrated: 2020/2/4
- Sensor-Surface: 1.4mm (Mechanical Surface Detection)
- Electronics: DAE4 Sn699; Calibrated: 2020/2/26
- Phantom: SAM-Middle; Type: SAM; Serial: TP-1503
- Measurement SW: DASY52, Version 52.10 (4);SEMCAD X Version 14.6.14 (7483)

Pin=250mW/Area Scan (61x61x1): Interpolated grid: dx=1.500 mm, dy=1.500 mm
Maximum value of SAR (interpolated) = 3.06 W/kg

Pin=250mW/Zoom Scan (5x5x7)/Cube 0: Measurement grid: dx=8mm, dy=8mm, dz=5mm
Reference Value = 60.42 V/m; Power Drift = -0.14 dB
Peak SAR (extrapolated) = 3.45 W/kg
SAR(1 g) = 2.34 W/kg; SAR(10 g) = 1.54 W/kg
Maximum value of SAR (measured) = 3.08 W/kg

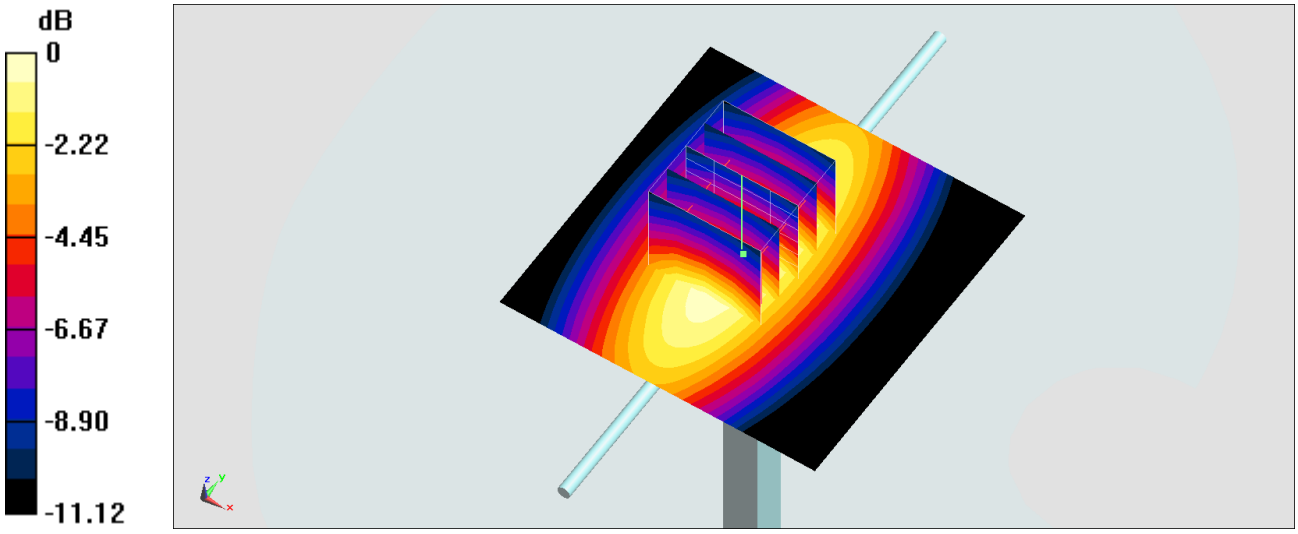

0 dB = 3.08 W/kg = 4.89 dBW/kg

System Check_Head_835MHz

DUT: D835V2-4d167

Communication System: CW; Frequency: 835 MHz;Duty Cycle: 1:1
Medium: HSL_850_200710 Medium parameters used: f = 835 MHz; σ = 0.899 S/m; ε_r = 42.474; ρ = 1000 kg/m^3
Ambient Temperature：23.5 ℃; Liquid Temperature：22.5 ℃

DASY5 Configuration:
- Probe: EX3DV4 - SN3728; ConvF(9.51, 9.51, 9.51) @ 835 MHz; Calibrated: 2020/2/4
- Sensor-Surface: 1.4mm (Mechanical Surface Detection)
- Electronics: DAE4 Sn699; Calibrated: 2020/2/26
- Phantom: SAM-Middle; Type: SAM; Serial: TP-1503
- Measurement SW: DASY52, Version 52.10 (4);SEMCAD X Version 14.6.14 (7483)

Pin=250mW/Area Scan (61x61x1): Interpolated grid: dx=1.500 mm, dy=1.500 mm
Maximum value of SAR (interpolated) = 3.19 W/kg

Pin=250mW/Zoom Scan (5x5x7)/Cube 0: Measurement grid: dx=8mm, dy=8mm, dz=5mm
Reference Value = 62.52 V/m; Power Drift = -0.05 dB
Peak SAR (extrapolated) = 4.10 W/kg
SAR(1 g) = 2.36 W/kg; SAR(10 g) = 1.49 W/kg
Maximum value of SAR (measured) = 3.43 W/kg

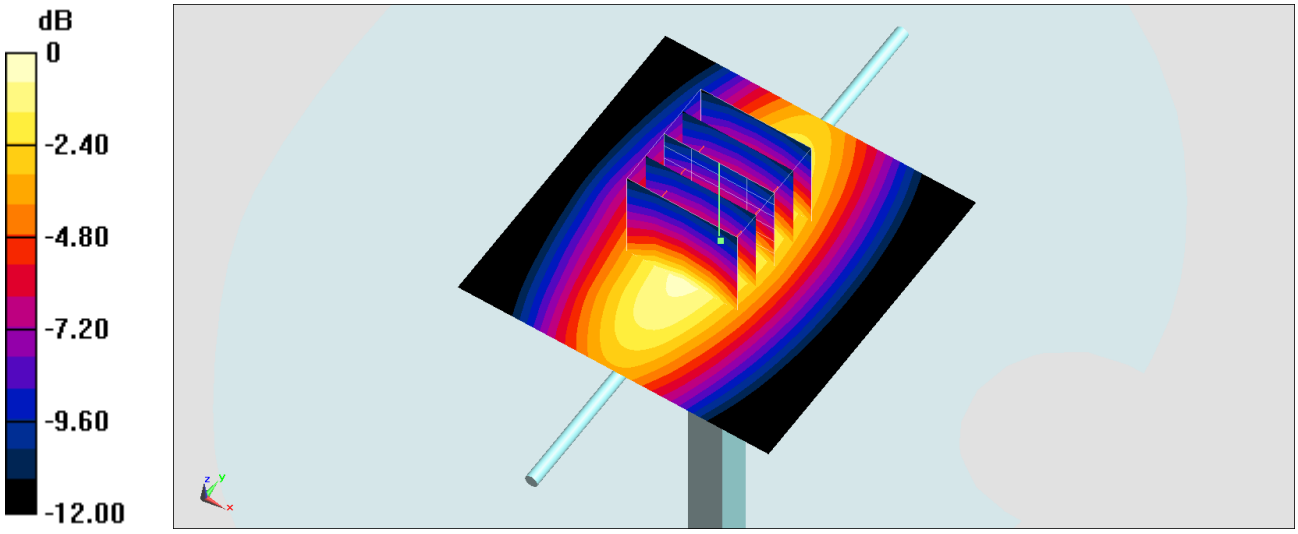

0 dB = 3.43 W/kg = 5.35 dBW/kg

System Check_Head_835MHz

DUT: D835V2-4d167

Communication System: CW; Frequency: 835 MHz;Duty Cycle: 1:1
Medium: HSL_850_200717 Medium parameters used: f = 835 MHz; σ = 0.934 S/m; ε_r = 42.511; ρ = 1000 kg/m^3
Ambient Temperature：23.6 ℃; Liquid Temperature：22.6 ℃

DASY5 Configuration:
- Probe: ES3DV3 - SN3184; ConvF(6.41, 6.41, 6.41) @ 835 MHz; Calibrated: 2019/9/25
- Sensor-Surface: 3mm (Mechanical Surface Detection)
- Electronics: DAE4 Sn916; Calibrated: 2019/12/17
- Phantom: SAM_Right; Type: QD000P40CD; Serial: TP:1683
- Measurement SW: DASY52, Version 52.10 (4);SEMCAD X Version 14.6.14 (7483)

Pin=250mW/Area Scan (61x61x1): Interpolated grid: dx=1.500 mm, dy=1.500 mm
Maximum value of SAR (interpolated) = 2.68 W/kg

Pin=250mW/Zoom Scan (5x5x7)/Cube 0: Measurement grid: dx=8mm, dy=8mm, dz=5mm
Reference Value = 54.58 V/m; Power Drift = -0.16 dB
Peak SAR (extrapolated) = 3.22 W/kg
SAR(1 g) = 2.29 W/kg; SAR(10 g) = 1.54 W/kg
Maximum value of SAR (measured) = 2.64 W/kg

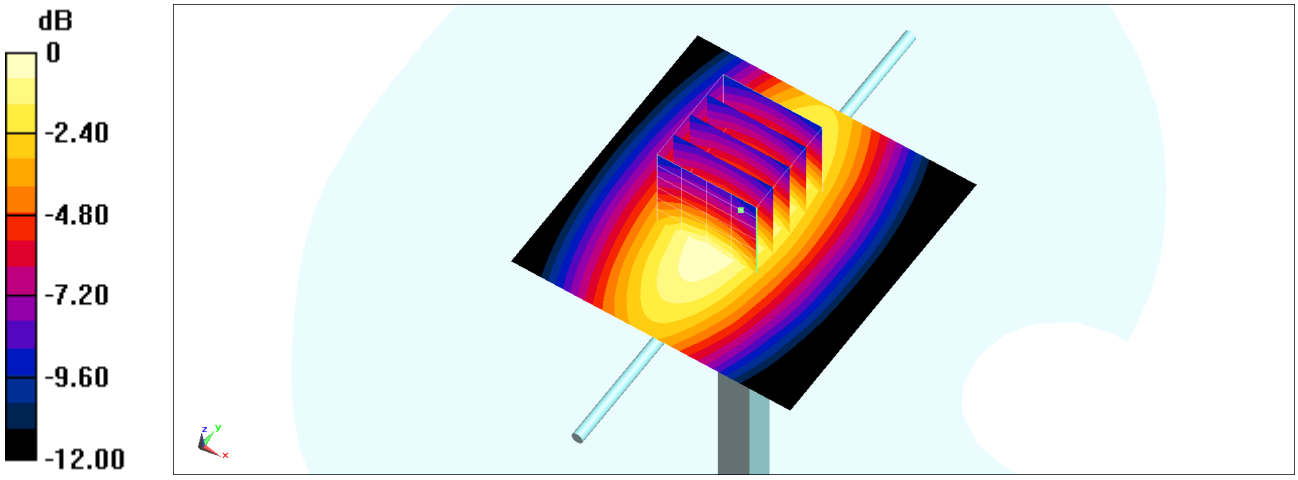

0 dB = 2.64 W/kg = 4.22 dBW/kg

System Check_Head_835MHz

DUT: D835V2-4d167

Communication System: CW ; Frequency: 835 MHz;Duty Cycle: 1:1
Medium: HSL_850_200721 Medium parameters used: f = 835 MHz; σ = 0.879 S/m; ε_r = 40.816; ρ = 1000 kg/m^3
Ambient Temperature：23.5 ℃; Liquid Temperature：22.5 ℃

DASY5 Configuration:
- Probe: EX3DV4 - SN3728; ConvF(9.51, 9.51, 9.51) @ 835 MHz; Calibrated: 2020/2/4
- Sensor-Surface: 1.4mm (Mechanical Surface Detection)
- Electronics: DAE4 Sn699; Calibrated: 2020/2/26
- Phantom: SAM-Middle; Type: SAM; Serial: TP-1503
- Measurement SW: DASY52, Version 52.10 (4);SEMCAD X Version 14.6.14 (7483)

Pin=250mW/Area Scan (61x61x1): Interpolated grid: dx=1.500 mm, dy=1.500 mm
Maximum value of SAR (interpolated) = 3.02 W/kg

Pin=250mW/Zoom Scan (5x5x7)/Cube 0: Measurement grid: dx=8mm, dy=8mm, dz=5mm
Reference Value = 60.42 V/m; Power Drift = -0.01 dB
Peak SAR (extrapolated) = 3.41 W/kg
SAR(1 g) = 2.31 W/kg; SAR(10 g) = 1.52 W/kg
Maximum value of SAR (measured) = 3.04 W/kg

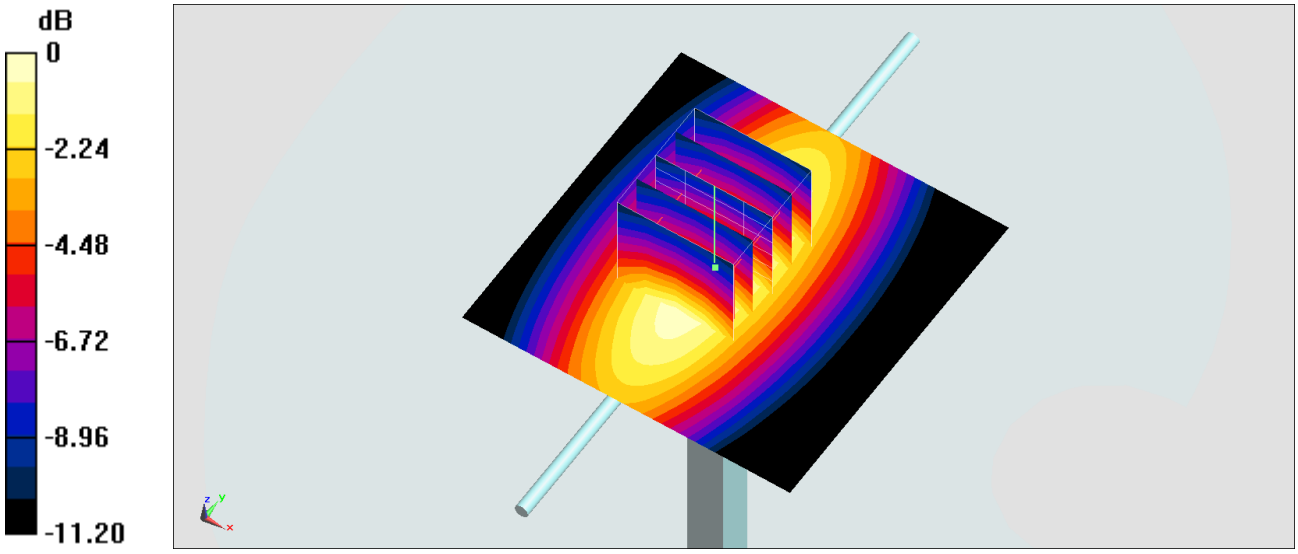

0 dB = 3.04 W/kg = 4.83 dBW/kg

Test Laboratory: Sporton International Inc. SAR/HAC Testing Lab Date: 2020/7/28

System Check_Head_835MHz

DUT: D835V2-4d167

Communication System: CW; Frequency: 835 MHz;Duty Cycle: 1:1
Medium: HSL_850_200728 Medium parameters used: f = 835 MHz; σ = 0.926 S/m; ε_r = 42.441; ρ = 1000 kg/m^3
Ambient Temperature：23.6 ℃； Liquid Temperature：22.6 ℃

DASY5 Configuration:
- Probe: EX3DV4 - SN7590; ConvF(10.63, 10.63, 10.63) @ 835 MHz; Calibrated: 2020/4/14
- Sensor-Surface: 1.4mm (Mechanical Surface Detection)
- Electronics: DAE3 Sn577; Calibrated: 2019/9/17
- Phantom: SAM_Right; Type: QD000P40CB; Serial: S/N:1489
- Measurement SW: DASY52, Version 52.10 (4);SEMCAD X Version 14.6.14 (7483)

Pin=250mW/Area Scan (61x61x1): Interpolated grid: dx=1.500 mm, dy=1.500 mm
Maximum value of SAR (interpolated) = 2.96 W/kg

Pin=250mW/Zoom Scan (5x5x7)/Cube 0: Measurement grid: dx=8mm, dy=8mm, dz=5mm
Reference Value = 56.82 V/m; Power Drift = 0.01 dB
Peak SAR (extrapolated) = 3.94 W/kg
SAR(1 g) = 2.5 W/kg; SAR(10 g) = 1.64 W/kg
Maximum value of SAR (measured) = 2.92 W/kg

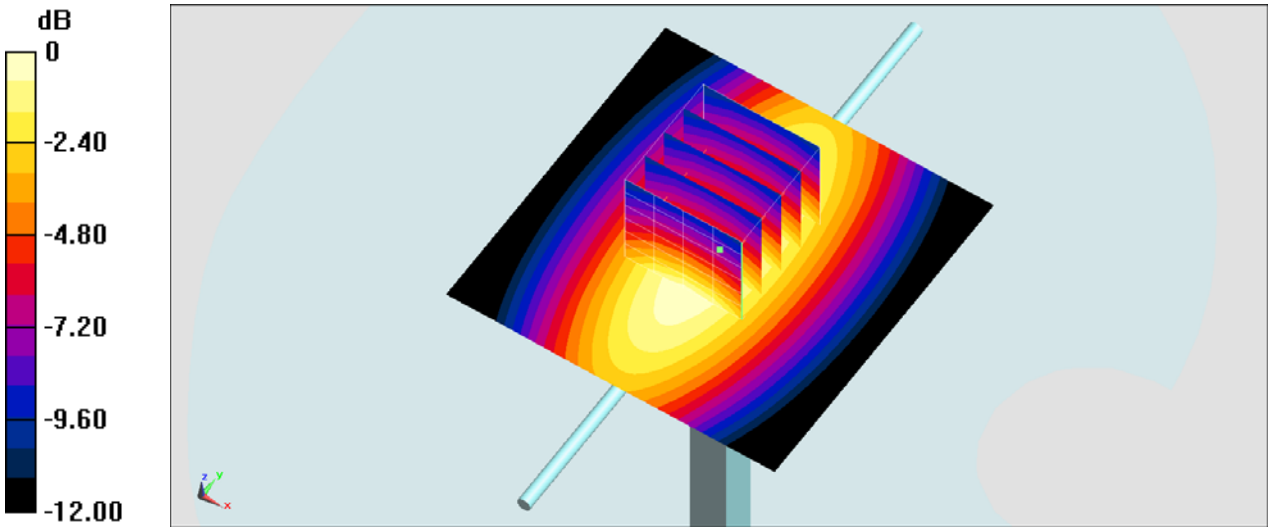

0 dB = 2.92 W/kg = 4.65 dBW/kg

System Check_Head_1750MHz

DUT: D1750V2-1112

Communication System: CW ; Frequency: 1750 MHz;Duty Cycle: 1:1
Medium: HSL_1750_200624 Medium parameters used: f = 1750 MHz; σ = 1.374 S/m; ε_r = 41.722; ρ = 1000 kg/m^3
Ambient Temperature：23.5 ℃; Liquid Temperature：22.5 ℃

DASY5 Configuration:
- Probe: ES3DV3 - SN3270; ConvF(5.41, 5.41, 5.41) @ 1750 MHz; Calibrated: 2019/9/25
- Sensor-Surface: 3mm (Mechanical Surface Detection)
- Electronics: DAE4 Sn1399; Calibrated: 2019/11/14
- Phantom: SAM-Middle; Type: SAM; Serial: TP-1503
- Measurement SW: DASY52, Version 52.10 (4);SEMCAD X Version 14.6.14 (7483)

Pin=250mW/Area Scan (61x61x1): Interpolated grid: dx=1.500 mm, dy=1.500 mm
Maximum value of SAR (interpolated) = 11.5 W/kg

Pin=250mW/Zoom Scan (5x5x7)/Cube 0: Measurement grid: dx=8mm, dy=8mm, dz=5mm
Reference Value = 91.42 V/m; Power Drift = -0.07 dB
Peak SAR (extrapolated) = 15.7 W/kg
SAR(1 g) = 8.96 W/kg; SAR(10 g) = 4.88 W/kg
Maximum value of SAR (measured) = 11.0 W/kg

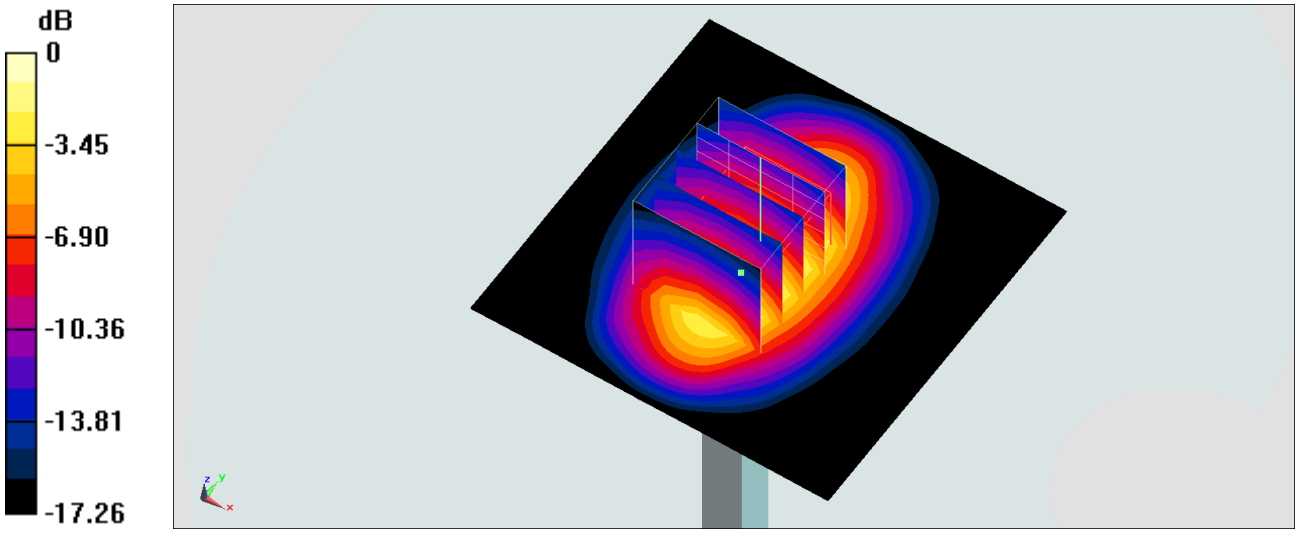

0 dB = 11.0 W/kg = 10.41 dBW/kg

System Check_Head_1750MHz

DUT: D1750V2-1112

Communication System: CW; Frequency: 1750 MHz;Duty Cycle: 1:1
Medium: HSL_1750_200706 Medium parameters used: f = 1750 MHz; σ = 1.392 S/m; ε_r = 41.746; ρ = 1000 kg/m^3
Ambient Temperature：23.2 ℃; Liquid Temperature：22.2 ℃

DASY5 Configuration:
- Probe: EX3DV4 - SN3728; ConvF(8.06, 8.06, 8.06) @ 1750 MHz; Calibrated: 2020/2/4
- Sensor-Surface: 1.4mm (Mechanical Surface Detection)
- Electronics: DAE4 Sn699; Calibrated: 2020/2/26
- Phantom: SAM-Middle; Type: SAM; Serial: TP-1503
- Measurement SW: DASY52, Version 52.10 (4);SEMCAD X Version 14.6.14 (7483)

Pin=250mW/Area Scan (61x61x1): Interpolated grid: dx=1.500 mm, dy=1.500 mm
Maximum value of SAR (interpolated) = 13.6 W/kg

Pin=250mW/Zoom Scan (5x5x7)/Cube 0: Measurement grid: dx=8mm, dy=8mm, dz=5mm
Reference Value = 100.2 V/m; Power Drift = 0.03dB
Peak SAR (extrapolated) = 16.3 W/kg
SAR(1 g) = 8.83 W/kg; SAR(10 g) = 4.67 W/kg
Maximum value of SAR (measured) = 13.3 W/kg

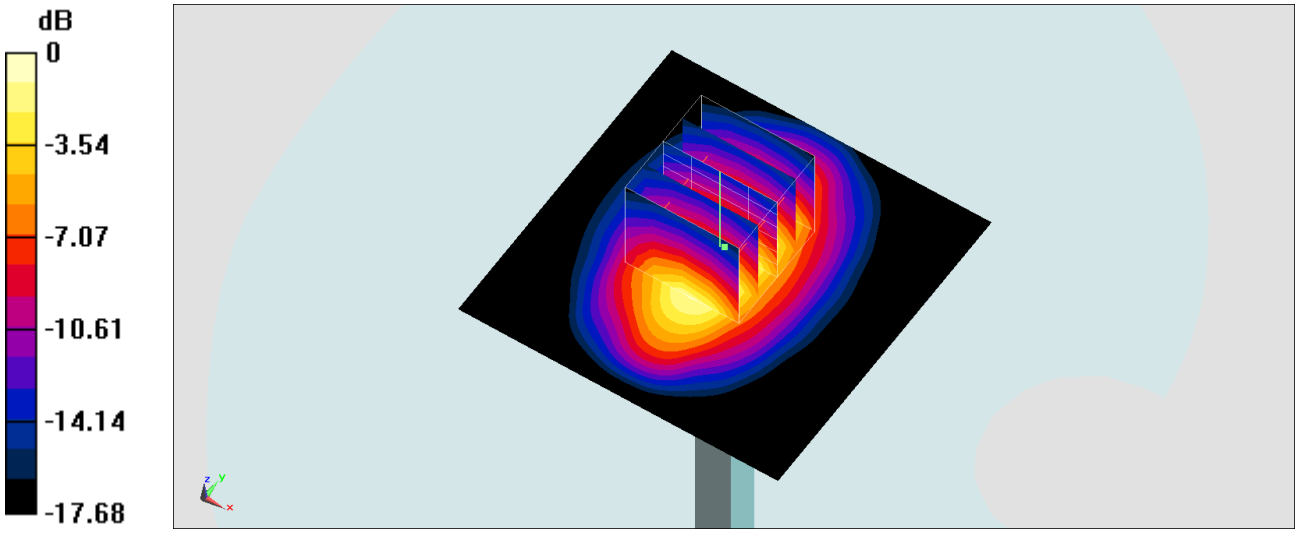

0 dB = 13.3 W/kg = 11.24 dBW/kg

System Check_Head_1750MHz

DUT: D1750V2-1112

Communication System: CW; Frequency: 1750 MHz;Duty Cycle: 1:1
Medium: HSL_1750_200716 Medium parameters used: f = 1750 MHz; σ = 1.387 S/m; ε_r = 40.296; ρ = 1000 kg/m^3
Ambient Temperature：23.7 ℃; Liquid Temperature：22.7 ℃

DASY5 Configuration:
- Probe: ES3DV3 - SN3184; ConvF(5.45, 5.45, 5.45) @ 1750 MHz; Calibrated: 2019/9/25
- Sensor-Surface: 3mm (Mechanical Surface Detection)
- Electronics: DAE4 Sn916; Calibrated: 2019/12/17
- Phantom: SAM_Right; Type: QD000P40CD; Serial: TP:1683
- Measurement SW: DASY52, Version 52.10 (4);SEMCAD X Version 14.6.14 (7483)

Pin=250mW/Area Scan (61x61x1): Interpolated grid: dx=1.500 mm, dy=1.500 mm
Maximum value of SAR (interpolated) = 11.6 W/kg

Pin=250mW/Zoom Scan (5x5x7)/Cube 0: Measurement grid: dx=8mm, dy=8mm, dz=5mm
Reference Value = 89.30 V/m; Power Drift = 0.12 dB
Peak SAR (extrapolated) = 16.0 W/kg
SAR(1 g) = 8.92 W/kg; SAR(10 g) = 4.74 W/kg
Maximum value of SAR (measured) = 11.2 W/kg

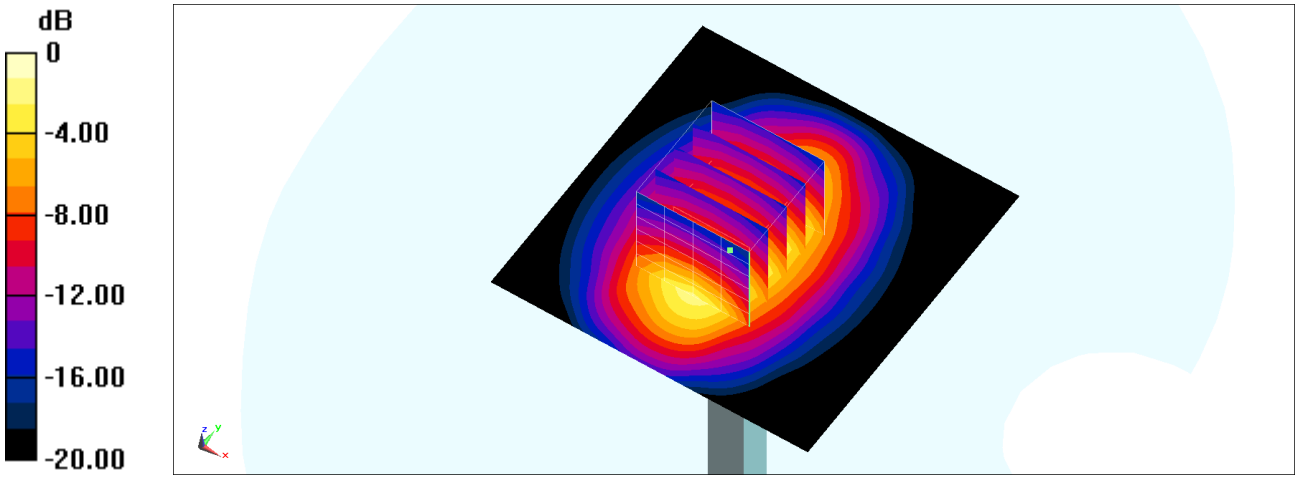

0 dB = 11.2 W/kg = 10.49 dBW/kg

Test Laboratory: Sporton International Inc. SAR/HAC Testing Lab Date: 2020/7/18

System Check_Head_1750MHz

DUT: D1750V2-1112

Communication System: CW; Frequency: 1750 MHz;Duty Cycle: 1:1
Medium: HSL_1750_200718 Medium parameters used: f = 1750 MHz; σ = 1.354 S/m; ε_r = 41.376; ρ = 1000 kg/m^3
Ambient Temperature：23.4 ℃; Liquid Temperature：22.4 ℃

DASY5 Configuration:
- Probe: ES3DV3 - SN3270; ConvF(5.41, 5.41, 5.41) @ 1750 MHz; Calibrated: 2019/9/25
- Sensor-Surface: 3mm (Mechanical Surface Detection)
- Electronics: DAE4 Sn1399; Calibrated: 2020/2/18
- Phantom: SAM_Left; Type: SAM; Serial: 1796
- Measurement SW: DASY52, Version 52.10 (4);SEMCAD X Version 14.6.14 (7483)

Pin=250mW/Area Scan (61x61x1): Interpolated grid: dx=1.500 mm, dy=1.500 mm
Maximum value of SAR (interpolated) = 12.2 W/kg

Pin=250mW/Zoom Scan (5x5x7)/Cube 0: Measurement grid: dx=8mm, dy=8mm, dz=5mm
Reference Value = 93.92 V/m; Power Drift = 0.03 dB
Peak SAR (extrapolated) = 16.8 W/kg
SAR(1 g) = 9.28 W/kg; SAR(10 g) = 4.93 W/kg
Maximum value of SAR (measured) = 11.7 W/kg

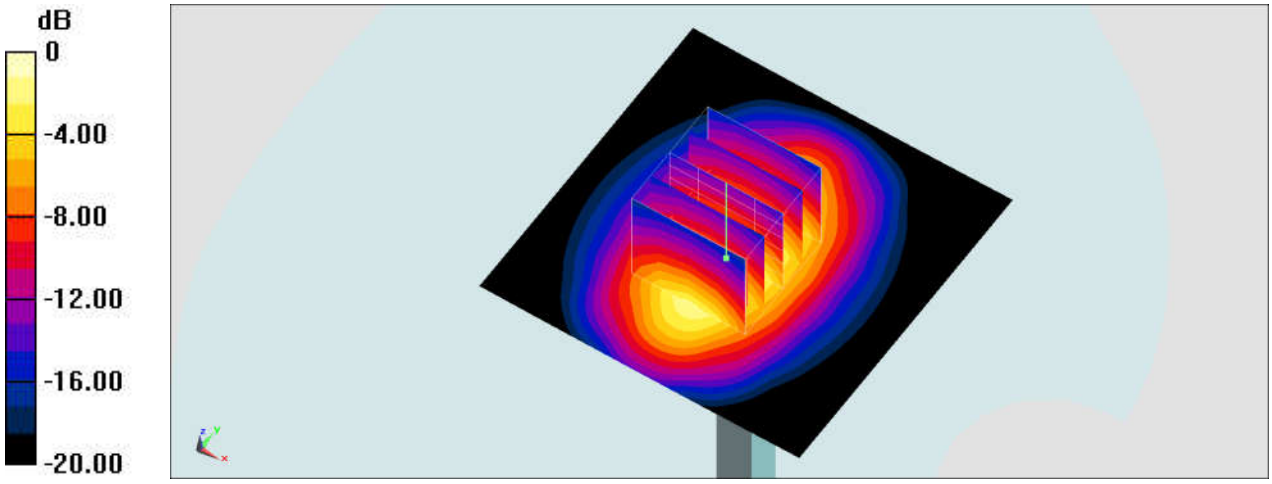

0 dB = 11.7 W/kg = 10.68 dBW/kg

System Check_Head_1750MHz

DUT: D1750V2-1112

Communication System: CW; Frequency: 1750 MHz;Duty Cycle: 1:1
Medium: HSL_1750_200720 Medium parameters used: f = 1750 MHz; σ = 1.367 S/m; ε_r = 39.428; ρ = 1000 kg/m^3
Ambient Temperature：23.4 ℃; Liquid Temperature：22.4 ℃

DASY5 Configuration:
- Probe: EX3DV4 - SN3728; ConvF(8.06, 8.06, 8.06) @ 1750 MHz; Calibrated: 2020/2/4
- Sensor-Surface: 1.4mm (Mechanical Surface Detection)
- Electronics: DAE4 Sn699; Calibrated: 2020/2/26
- Phantom: SAM-Middle; Type: SAM; Serial: TP-1503
- Measurement SW: DASY52, Version 52.10 (4);SEMCAD X Version 14.6.14 (7483)

Pin=250mW/Area Scan (61x61x1): Interpolated grid: dx=1.500 mm, dy=1.500 mm
Maximum value of SAR (interpolated) = 14.8 W/kg

Pin=250mW/Zoom Scan (5x5x7)/Cube 0: Measurement grid: dx=8mm, dy=8mm, dz=5mm
Reference Value = 103.8 V/m; Power Drift = 0.09 dB
Peak SAR (extrapolated) = 17.1 W/kg
SAR(1 g) = 9.46 W/kg; SAR(10 g) = 5.04 W/kg
Maximum value of SAR (measured) = 14.4 W/kg

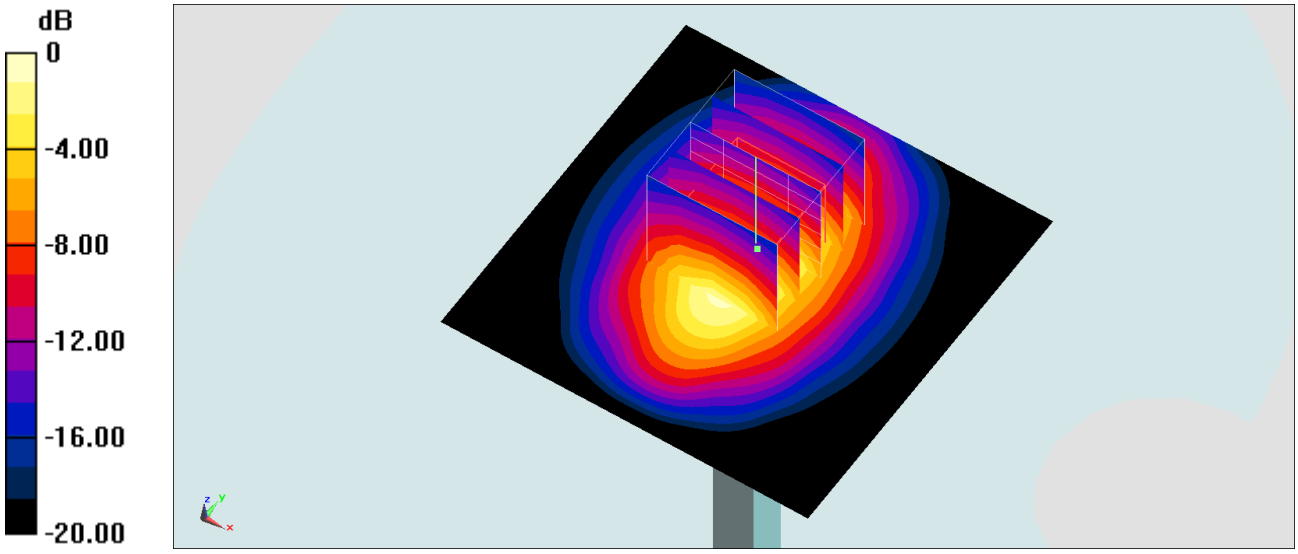

0 dB = 14.4 W/kg = 11.58 dBW/kg

System Check_Head_1900MHz

DUT: D1900V2-5d041

Communication System: CW; Frequency: 1900 MHz;Duty Cycle: 1:1
Medium: HSL_1900_200622 Medium parameters used: f = 1900 MHz; σ = 1.43 S/m; ε_r = 40.283; ρ = 1000 kg/m^3
Ambient Temperature：23.2 ℃; Liquid Temperature：22.2 ℃

DASY5 Configuration:
- Probe: ES3DV3 - SN3270; ConvF(5.2, 5.2, 5.2) @ 1900 MHz; Calibrated: 2019/9/25
- Sensor-Surface: 3mm (Mechanical Surface Detection)
- Electronics: DAE4 Sn1399; Calibrated: 2019/11/14
- Phantom: SAM-Middle; Type: SAM; Serial: TP-1503
- Measurement SW: DASY52, Version 52.10 (4);SEMCAD X Version 14.6.14 (7483)

Pin=250mW/Area Scan (61x61x1): Interpolated grid: dx=1.500 mm, dy=1.500 mm
Maximum value of SAR (interpolated) = 13.2 W/kg

Pin=250mW/Zoom Scan (5x5x7)/Cube 0: Measurement grid: dx=8mm, dy=8mm, dz=5mm
Reference Value = 97.73 V/m; Power Drift = 0.01 dB
Peak SAR (extrapolated) = 18.6 W/kg
SAR(1 g) = 10.3 W/kg; SAR(10 g) = 5.4 W/kg
Maximum value of SAR (measured) = 12.7 W/kg

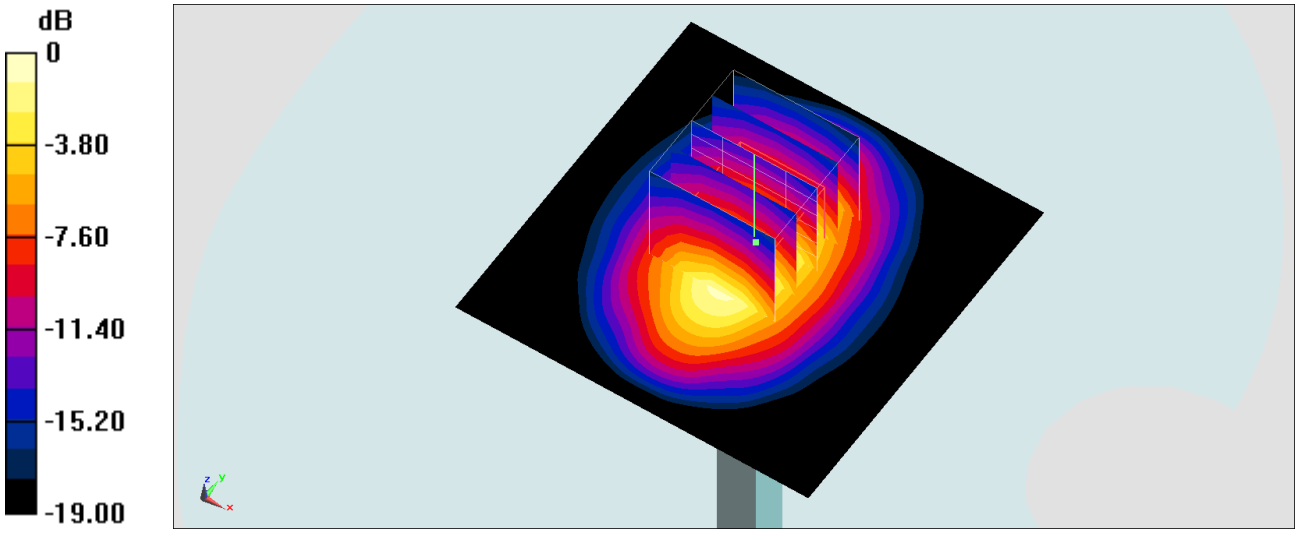

0 dB = 12.7 W/kg = 11.04 dBW/kg

System Check_Head_1900MHz

DUT: D1900V2-5d041

Communication System: CW ; Frequency: 1900 MHz;Duty Cycle: 1:1
Medium: HSL_1900_200704 Medium parameters used: f = 1900 MHz; σ = 1.453 S/m; ε_r = 40.652; ρ = 1000 kg/m^3
Ambient Temperature：23.6 ℃; Liquid Temperature：22.6 ℃

DASY5 Configuration:
- Probe: EX3DV4 - SN3728; ConvF(7.82, 7.82, 7.82) @ 1900 MHz; Calibrated: 2020/2/4
- Sensor-Surface: 1.4mm (Mechanical Surface Detection)
- Electronics: DAE4 Sn699; Calibrated: 2020/2/26
- Phantom: SAM-Middle; Type: SAM; Serial: TP-1503
- Measurement SW: DASY52, Version 52.10 (4);SEMCAD X Version 14.6.14 (7483)

Pin=250mW/Area Scan (61x61x1): Interpolated grid: dx=1.500 mm, dy=1.500 mm
Maximum value of SAR (interpolated) = 16.6 W/kg

Pin=250mW/Zoom Scan (5x5x7)/Cube 0: Measurement grid: dx=8mm, dy=8mm, dz=5mm
Reference Value = 106.1 V/m; Power Drift = -0.14 dB
Peak SAR (extrapolated) = 18.7 W/kg
SAR(1 g) = 10.2 W/kg; SAR(10 g) = 5.29 W/kg
Maximum value of SAR (measured) = 15.8 W/kg

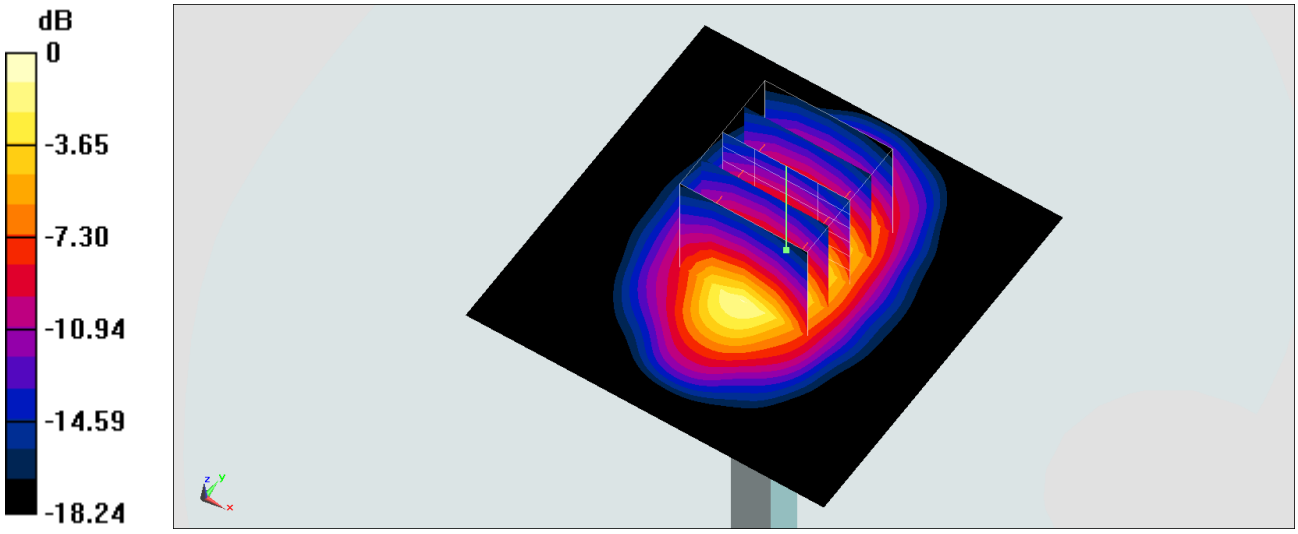

0 dB = 15.8 W/kg = 11.99 dBW/kg

System Check_Head_1900MHz

DUT: D1900V2-5d041

Communication System: CW; Frequency: 1900 MHz;Duty Cycle: 1:1
Medium: HSL_1900_200707 Medium parameters used: f = 1900 MHz; σ = 1.456 S/m; ε_r = 40.204; ρ = 1000 kg/m^3
Ambient Temperature：23.5 ℃; Liquid Temperature：22.5 ℃

DASY5 Configuration:
- Probe: EX3DV4 - SN3728; ConvF(7.82, 7.82, 7.82) @ 1900 MHz; Calibrated: 2020/2/4
- Sensor-Surface: 1.4mm (Mechanical Surface Detection)
- Electronics: DAE4 Sn699; Calibrated: 2020/2/26
- Phantom: SAM-Middle; Type: SAM; Serial: TP-1503
- Measurement SW: DASY52, Version 52.10 (4);SEMCAD X Version 14.6.14 (7483)

Pin=250mW/Area Scan (61x61x1): Interpolated grid: dx=1.500 mm, dy=1.500 mm
Maximum value of SAR (interpolated) = 13.7 W/kg

Pin=250mW/Zoom Scan (5x5x7)/Cube 0: Measurement grid: dx=8mm, dy=8mm, dz=5mm
Reference Value = 96.07 V/m; Power Drift = 0.02 dB
Peak SAR (extrapolated) = 19.8 W/kg
SAR(1 g) = 10.5 W/kg; SAR(10 g) = 5.35 W/kg
Maximum value of SAR (measured) = 13.3 W/kg

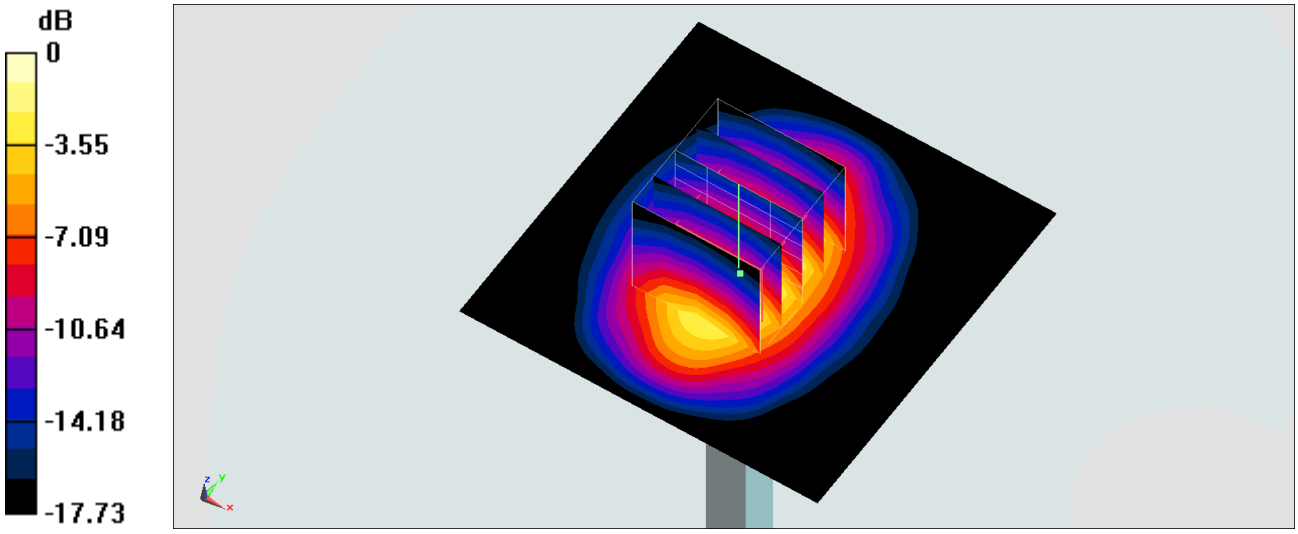

0 dB = 13.3 W/kg = 11.24 dBW/kg

System Check_Head_1900MHz

DUT: D1900V2-5d041

Communication System: CW; Frequency: 1900 MHz;Duty Cycle: 1:1
Medium: HSL_1900_200716 Medium parameters used: f = 1900 MHz; σ = 1.419 S/m; ε_r = 40.474; ρ = 1000 kg/m^3
Ambient Temperature：23.7 ℃; Liquid Temperature：22.7 ℃

DASY5 Configuration:
- Probe: ES3DV3 - SN3184; ConvF(5.23, 5.23, 5.23) @ 1900 MHz; Calibrated: 2019/9/25
- Sensor-Surface: 3mm (Mechanical Surface Detection)
- Electronics: DAE4 Sn916; Calibrated: 2019/12/17
- Phantom: SAM_Right; Type: QD000P40CD; Serial: TP:1683
- Measurement SW: DASY52, Version 52.10 (4);SEMCAD X Version 14.6.14 (7483)

Pin=250mW/Area Scan (61x61x1): Interpolated grid: dx=1.500 mm, dy=1.500 mm
Maximum value of SAR (interpolated) = 13.5 W/kg

Pin=250mW/Zoom Scan (5x5x7)/Cube 0: Measurement grid: dx=8mm, dy=8mm, dz=5mm
Reference Value = 88.32 V/m; Power Drift = -0.14 dB
Peak SAR (extrapolated) = 16.2 W/kg
SAR(1 g) = 9.62 W/kg; SAR(10 g) = 5.14 W/kg
Maximum value of SAR (measured) = 10.9 W/kg

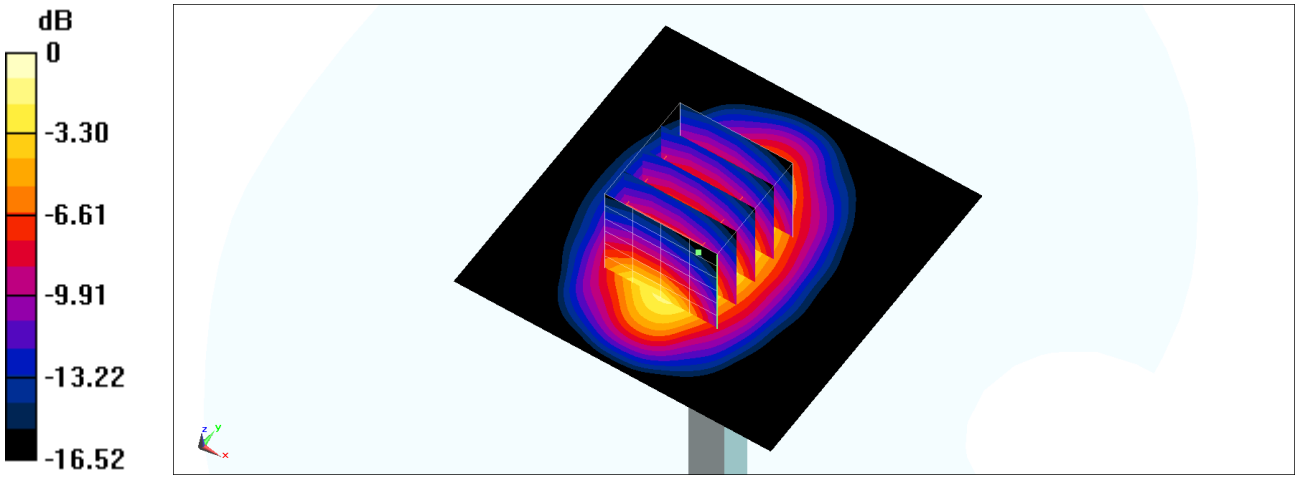

0 dB = 10.9 W/kg = 10.37 dBW/kg

Test Laboratory: Sporton International Inc. SAR/HAC Testing Lab Date: 2020/7/18

System Check_Head_1900MHz

DUT: D1900V2-5d041

Communication System: CW; Frequency: 1900 MHz;Duty Cycle: 1:1
Medium: HSL_1900_200718 Medium parameters used: f = 1900 MHz; σ = 1.414 S/m; ε_r = 40.408; ρ = 1000 kg/m^3
Ambient Temperature：23.4 ℃; Liquid Temperature：22.4 ℃

DASY5 Configuration:
- Probe: ES3DV3 - SN3270; ConvF(5.2, 5.2, 5.2) @ 1900 MHz; Calibrated: 2019/9/25
- Sensor-Surface: 3mm (Mechanical Surface Detection)
- Electronics: DAE4 Sn1399; Calibrated: 2020/2/18
- Phantom: SAM_Left; Type: SAM; Serial: 1796
- Measurement SW: DASY52, Version 52.10 (4);SEMCAD X Version 14.6.14 (7483)

Pin=250mW/Area Scan (61x61x1): Interpolated grid: dx=1.500 mm, dy=1.500 mm
Maximum value of SAR (interpolated) = 13.6 W/kg

Pin=250mW/Zoom Scan (5x5x7)/Cube 0: Measurement grid: dx=8mm, dy=8mm, dz=5mm
Reference Value = 96.86 V/m; Power Drift = 0.05 dB
Peak SAR (extrapolated) = 18.8 W/kg
SAR(1 g) = 10.2 W/kg; SAR(10 g) = 5.26 W/kg
Maximum value of SAR (measured) = 13.0 W/kg

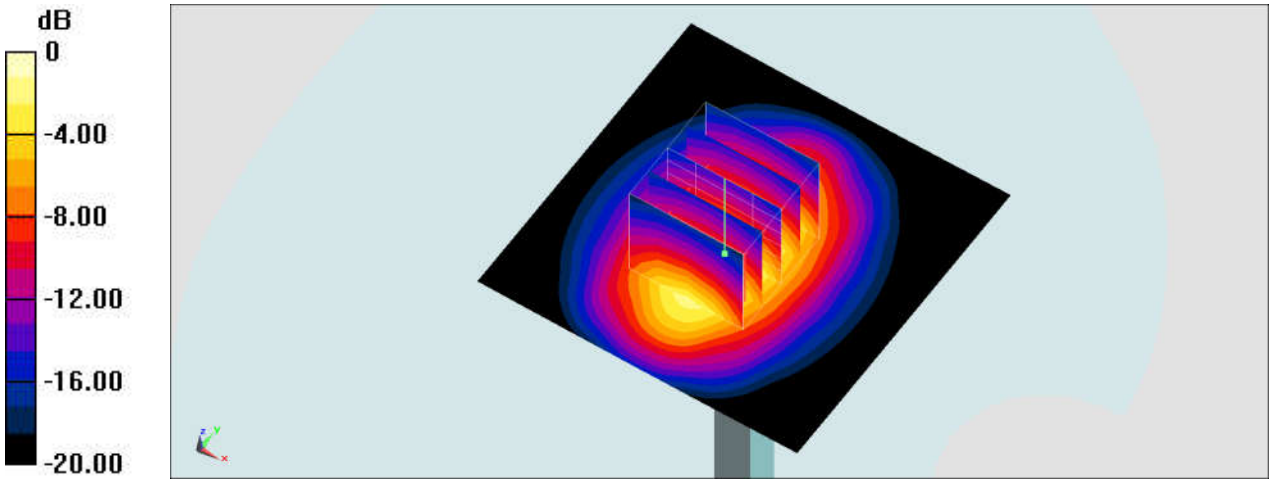

0 dB = 13.0 W/kg = 11.14 dBW/kg

System Check_Head_1900MHz

DUT: D1900V2-5d041

Communication System: CW; Frequency: 1900 MHz;Duty Cycle: 1:1
Medium: HSL_1900_200719 Medium parameters used: f = 1900 MHz; σ = 1.408 S/m; ε_r = 40.069; ρ = 1000 kg/m^3
Ambient Temperature：23.4 ℃; Liquid Temperature：22.4 ℃

DASY5 Configuration:
- Probe: EX3DV4 - SN3728; ConvF(7.82, 7.82, 7.82) @ 1900 MHz; Calibrated: 2020/2/4
- Sensor-Surface: 1.4mm (Mechanical Surface Detection)
- Electronics: DAE4 Sn699; Calibrated: 2020/2/26
- Phantom: SAM-Middle; Type: SAM; Serial: TP-1503
- Measurement SW: DASY52, Version 52.10 (4);SEMCAD X Version 14.6.14 (7483)

Pin=250mW/Area Scan (61x61x1): Interpolated grid: dx=1.500 mm, dy=1.500 mm
Maximum value of SAR (interpolated) = 16.5 W/kg

Pin=250mW/Zoom Scan (5x5x7)/Cube 0: Measurement grid: dx=8mm, dy=8mm, dz=5mm
Reference Value = 107.3 V/m; Power Drift = 0.15 dB
Peak SAR (extrapolated) = 19.4 W/kg
SAR(1 g) = 10.3 W/kg; SAR(10 g) = 5.28 W/kg
Maximum value of SAR (measured) = 16.0 W/kg

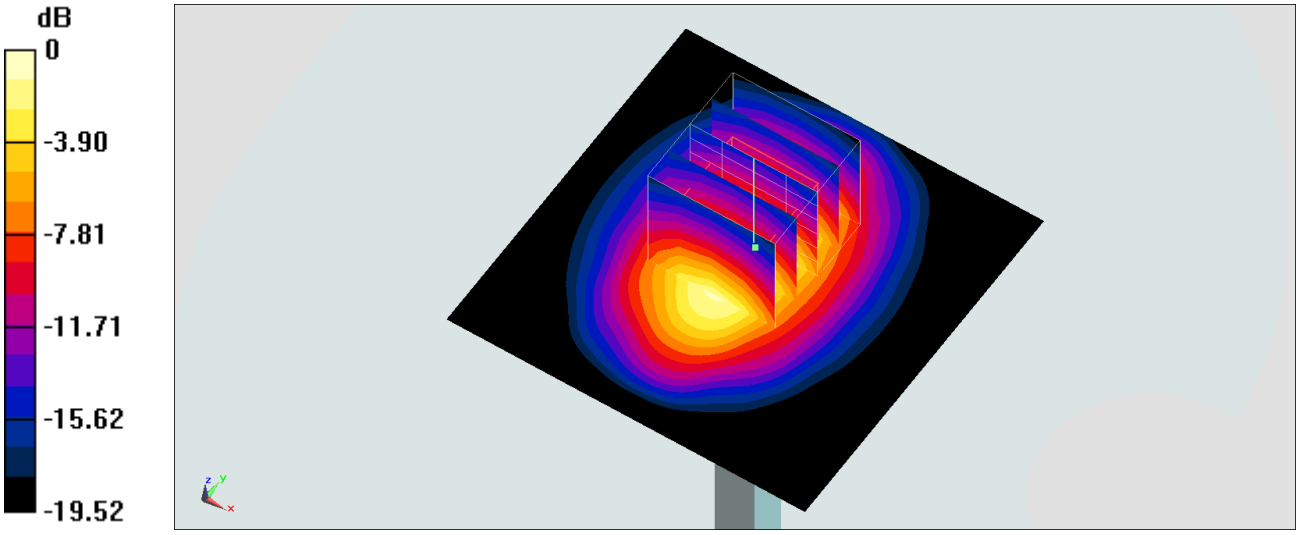

0 dB = 16.0 W/kg = 12.04 dBW/kg

System Check_Head_2300MHz

DUT: D2300V2-1006

Communication System: CW ; Frequency: 2300 MHz;Duty Cycle: 1:1
Medium: HSL_2300_200619 Medium parameters used: f = 2300 MHz; σ = 1.698 S/m; ε_r = 39.26; ρ = 1000 kg/m^3
Ambient Temperature：23.6 ℃; Liquid Temperature：22.6 ℃

DASY5 Configuration:
- Probe: EX3DV4 - SN3925; ConvF(7.87, 7.87, 7.87) @ 2300 MHz; Calibrated: 2019/9/20
- Sensor-Surface: 1.4mm (Mechanical Surface Detection)
- Electronics: DAE4 Sn376; Calibrated: 2019/12/6
- Phantom: SAM_Left; Type: QD000P40CD; Serial: TP:1682
- Measurement SW: DASY52, Version 52.10 (4);SEMCAD X Version 14.6.14 (7483)

Pin=250mW/Area Scan (71x71x1): Interpolated grid: dx=1.200 mm, dy=1.200 mm
Maximum value of SAR (interpolated) = 21.3 W/kg

Pin=250mW/Zoom Scan (7x7x7)/Cube 0: Measurement grid: dx=5mm, dy=5mm, dz=5mm
Reference Value = 115.6 V/m; Power Drift = -0.07 dB
Peak SAR (extrapolated) = 26.6 W/kg
SAR(1 g) = 12.8 W/kg; SAR(10 g) = 6.01 W/kg
Maximum value of SAR (measured) = 21.4 W/kg

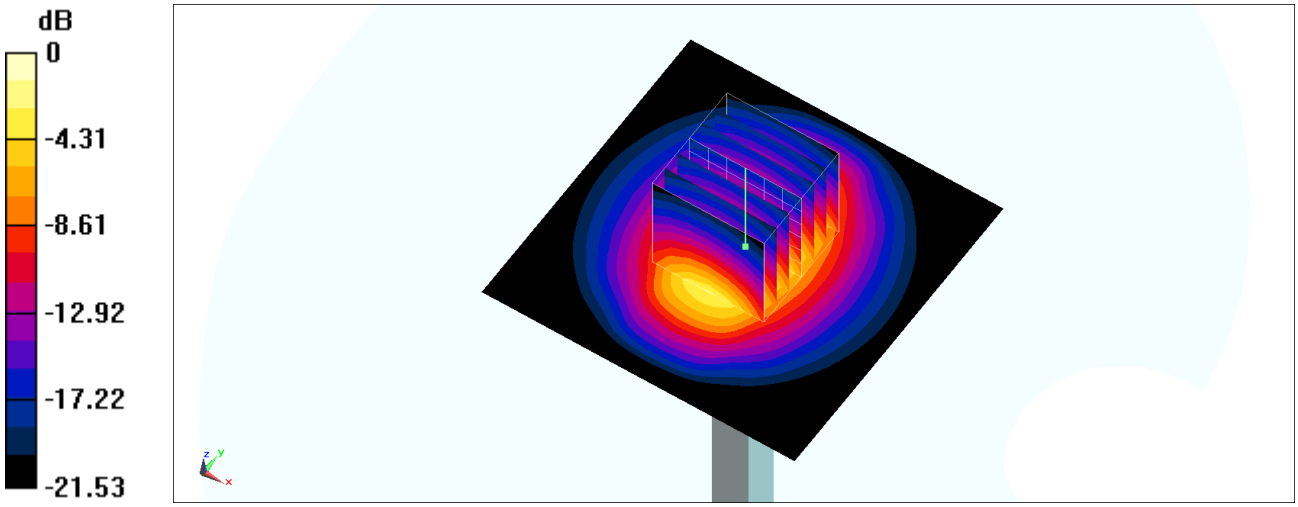

0 dB = 21.4 W/kg = 13.30 dBW/kg

System Check_Head_2300MHz

DUT: D2300V2-1006

Communication System: CW; Frequency: 2300 MHz;Duty Cycle: 1:1
Medium: HSL_2300_200707 Medium parameters used: f = 2300 MHz; σ = 1.689 S/m; ε_r = 39.686; ρ = 1000 kg/m^3
Ambient Temperature：23.5 ℃; Liquid Temperature：22.5 ℃

DASY5 Configuration:
- Probe: EX3DV4 - SN3728; ConvF(7.56, 7.56, 7.56) @ 2300 MHz; Calibrated: 2020/2/4
- Sensor-Surface: 1.4mm (Mechanical Surface Detection)
- Electronics: DAE4 Sn699; Calibrated: 2020/2/26
- Phantom: SAM-Middle; Type: SAM; Serial: TP-1503
- Measurement SW: DASY52, Version 52.10 (4);SEMCAD X Version 14.6.14 (7483)

Pin=250mW/Area Scan (71x71x1): Interpolated grid: dx=1.200 mm, dy=1.200 mm
Maximum value of SAR (interpolated) = 20.7 W/kg

Pin=250mW/Zoom Scan (7x7x7)/Cube 0: Measurement grid: dx=5mm, dy=5mm, dz=5mm
Reference Value = 111.0 V/m; Power Drift = -0.12 dB
Peak SAR (extrapolated) = 24.8 W/kg
SAR(1 g) = 12.6 W/kg; SAR(10 g) = 6 W/kg
Maximum value of SAR (measured) = 20.5 W/kg

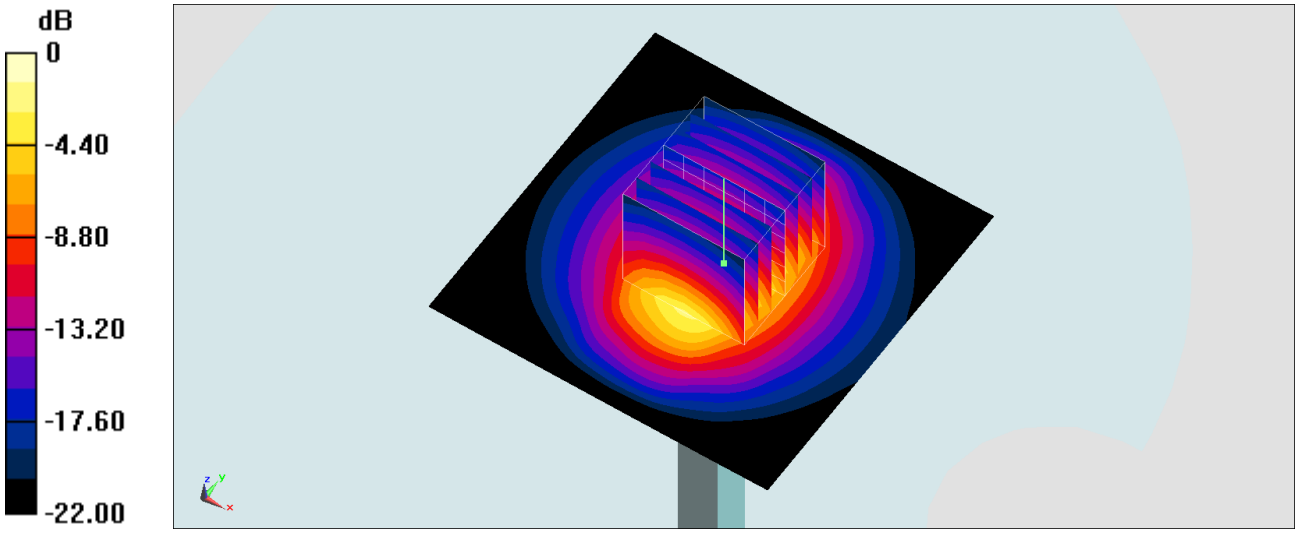

0 dB = 20.5 W/kg = 13.12 dBW/kg

System Check_Head_2450MHz

DUT: D2450V2-736

Communication System: CW ; Frequency: 2450 MHz;Duty Cycle: 1:1
Medium: HSL_2450_200710 Medium parameters used : f = 2450 MHz; σ = 1.792 S/m; ε_r = 38.55; ρ = 1000 kg/m^3
Ambient Temperature：23.5 ℃; Liquid Temperature：22.5 ℃

DASY5 Configuration:
- Probe: EX3DV4 - SN3728; ConvF(7.33, 7.33, 7.33) @ 2450 MHz; Calibrated: 2020/2/4
- Sensor-Surface: 1.4mm (Mechanical Surface Detection)
- Electronics: DAE4 Sn699; Calibrated: 2020/2/26
- Phantom: SAM-Middle; Type: SAM; Serial: TP-1503
- Measurement SW: DASY52, Version 52.10 (4);SEMCAD X Version 14.6.14 (7483)

Pin=250mW/Area Scan (71x71x1): Interpolated grid: dx=1.200 mm, dy=1.200 mm
Maximum value of SAR (interpolated) = 23.0 W/kg

Pin=250mW/Zoom Scan (7x7x7)/Cube 0: Measurement grid: dx=5mm, dy=5mm, dz=5mm
Reference Value = 103.6 V/m; Power Drift = -0.14 dB
Peak SAR (extrapolated) = 26.3 W/kg
SAR(1 g) = 12.6 W/kg; SAR(10 g) = 5.88 W/kg
Maximum value of SAR (measured) = 21.2 W/kg

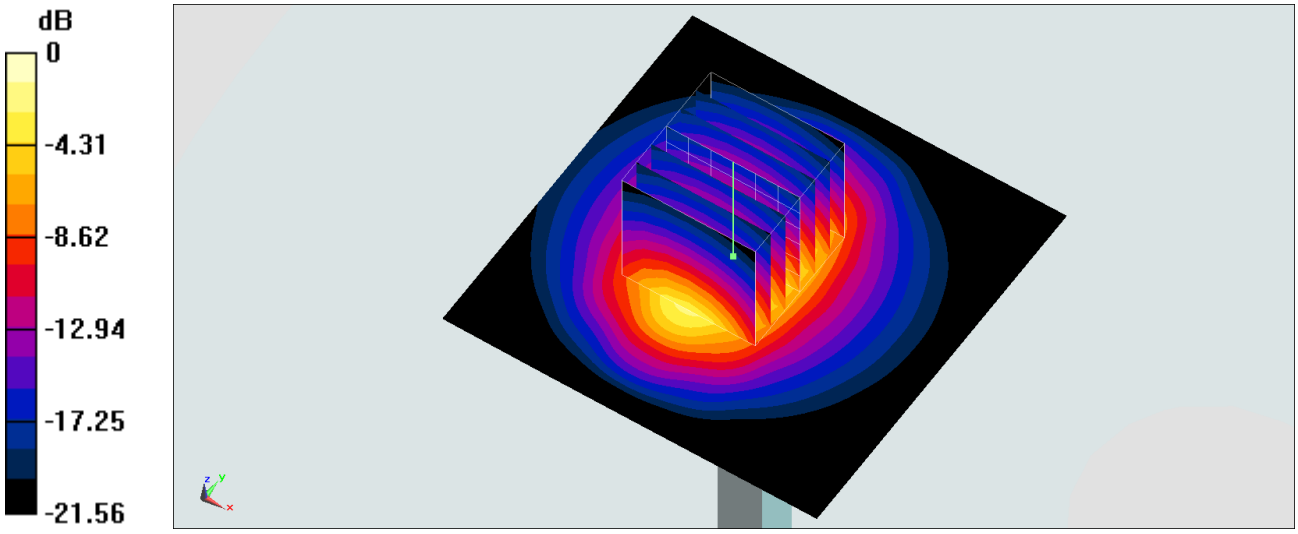

0 dB = 21.2 W/kg = 13.26 dBW/kg

System Check_Head_2450MHz

DUT: D2450V2-736

Communication System: CW; Frequency: 2450 MHz;Duty Cycle: 1:1
Medium: HSL_2450_200715 Medium parameters used: f = 2450 MHz; σ = 1.826 S/m; ε_r = 40.306; ρ = 1000 kg/m^3
Ambient Temperature：23.3 ℃; Liquid Temperature：22.3 ℃

DASY5 Configuration:
- Probe: EX3DV4 - SN3728; ConvF(7.33, 7.33, 7.33) @ 2450 MHz; Calibrated: 2020/2/4
- Sensor-Surface: 1.4mm (Mechanical Surface Detection)
- Electronics: DAE4 Sn699; Calibrated: 2020/2/26
- Phantom: SAM-Middle; Type: SAM; Serial: TP-1503
- Measurement SW: DASY52, Version 52.10 (4);SEMCAD X Version 14.6.14 (7483)

Pin=250mW/Area Scan (71x71x1): Interpolated grid: dx=1.200 mm, dy=1.200 mm
Maximum value of SAR (interpolated) = 21.1 W/kg

Pin=250mW/Zoom Scan (7x7x7)/Cube 0: Measurement grid: dx=5mm, dy=5mm, dz=5mm
Reference Value = 94.11 V/m; Power Drift = 0.12 dB
Peak SAR (extrapolated) = 25.4 W/kg
SAR(1 g) = 12.2 W/kg; SAR(10 g) = 5.72 W/kg
Maximum value of SAR (measured) = 20.4 W/kg

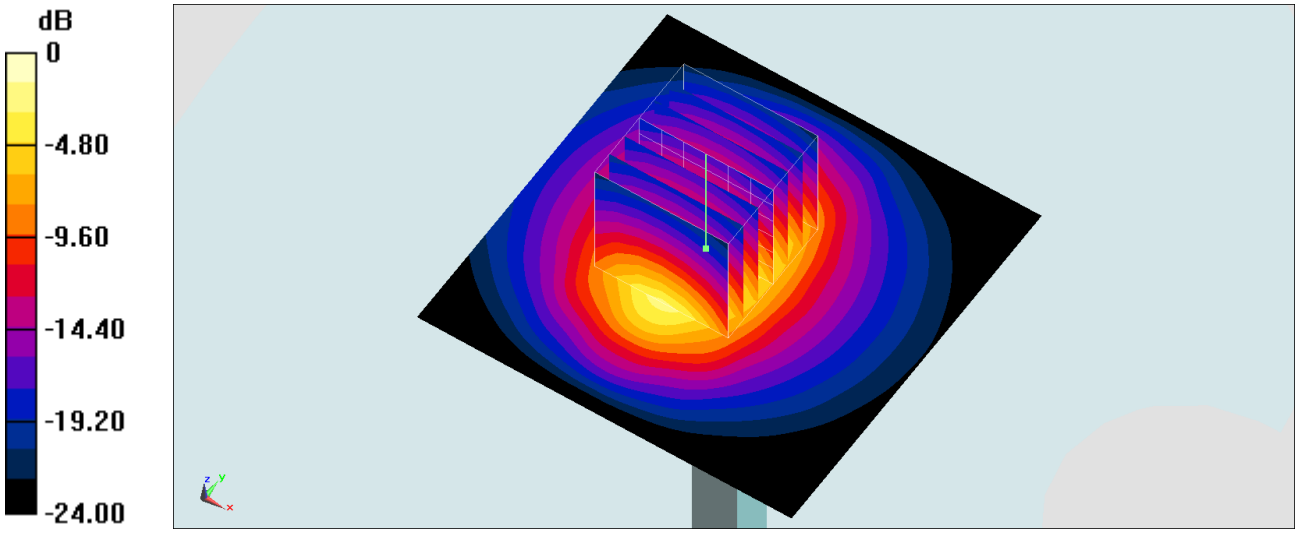

0 dB = 20.4 W/kg = 13.10 dBW/kg

System Check_Head_2450MHz

DUT: D2450V2-736

Communication System: CW; Frequency: 2450 MHz;Duty Cycle: 1:1
Medium: HSL_2450_200718 Medium parameters used : f = 2450 MHz; σ = 1.866 S/m; ε_r = 39.584; ρ = 1000 kg/m^3
Ambient Temperature：23.3 ℃; Liquid Temperature：22.3 ℃

DASY5 Configuration:
- Probe: EX3DV4 - SN3728; ConvF(7.33, 7.33, 7.33) @ 2450 MHz; Calibrated: 2020/2/4
- Sensor-Surface: 1.4mm (Mechanical Surface Detection)
- Electronics: DAE4 Sn699; Calibrated: 2020/2/26
- Phantom: SAM-Middle; Type: SAM; Serial: TP-1503
- Measurement SW: DASY52, Version 52.10 (4);SEMCAD X Version 14.6.14 (7483)

Pin=250mW/Area Scan (71x71x1): Interpolated grid: dx=1.200 mm, dy=1.200 mm
Maximum value of SAR (interpolated) = 22.6 W/kg

Pin=250mW/Zoom Scan (7x7x7)/Cube 0: Measurement grid: dx=5mm, dy=5mm, dz=5mm
Reference Value = 102.8 V/m; Power Drift = 0.13 dB
Peak SAR (extrapolated) = 27.3 W/kg
SAR(1 g) = 13.1 W/kg; SAR(10 g) = 6.08 W/kg
Maximum value of SAR (measured) = 22.0 W/kg

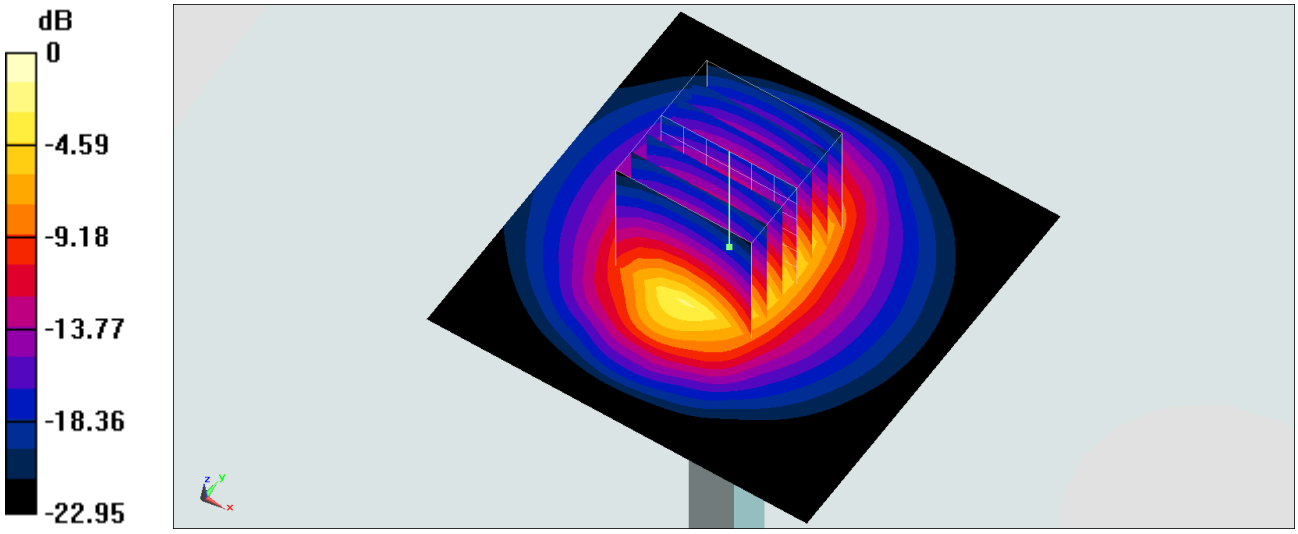

0 dB = 22.0 W/kg = 13.42 dBW/kg

Test Laboratory: Sporton International Inc. SAR/HAC Testing Lab Date: 2020/8/4

System Check_Head_2450MHz

DUT: D2450V2-736

Communication System: CW; Frequency: 2450 MHz;Duty Cycle: 1:1
Medium: HSL_2450_200804 Medium parameters used : f = 2450 MHz; σ = 1.761 S/m; ε_r = 39.012; ρ = 1000 kg/m^3
Ambient Temperature：23.2 ℃; Liquid Temperature：22.2 ℃

DASY5 Configuration:
- Probe: ES3DV3 - SN3270; ConvF(4.57, 4.57, 4.57) @ 2450 MHz; Calibrated: 2019/9/25
- Sensor-Surface: 3mm (Mechanical Surface Detection)
- Electronics: DAE4 Sn1399; Calibrated: 2020/2/18
- Phantom: SAM_Left; Type: SAM; Serial: 1796
- Measurement SW: DASY52, Version 52.10 (4);SEMCAD X Version 14.6.14 (7483)

Pin=250mW/Area Scan (61x61x1): Interpolated grid: dx=1.200 mm, dy=1.200 mm
Maximum value of SAR (interpolated) = 18.7 W/kg

Pin=250mW/Zoom Scan (7x7x7)/Cube 0: Measurement grid: dx=5mm, dy=5mm, dz=5mm
Reference Value = 105.8 V/m; Power Drift = -0.06 dB
Peak SAR (extrapolated) = 28.8 W/kg
SAR(1 g) = 13.6 W/kg; SAR(10 g) = 6.26 W/kg
Maximum value of SAR (measured) = 17.7 W/kg

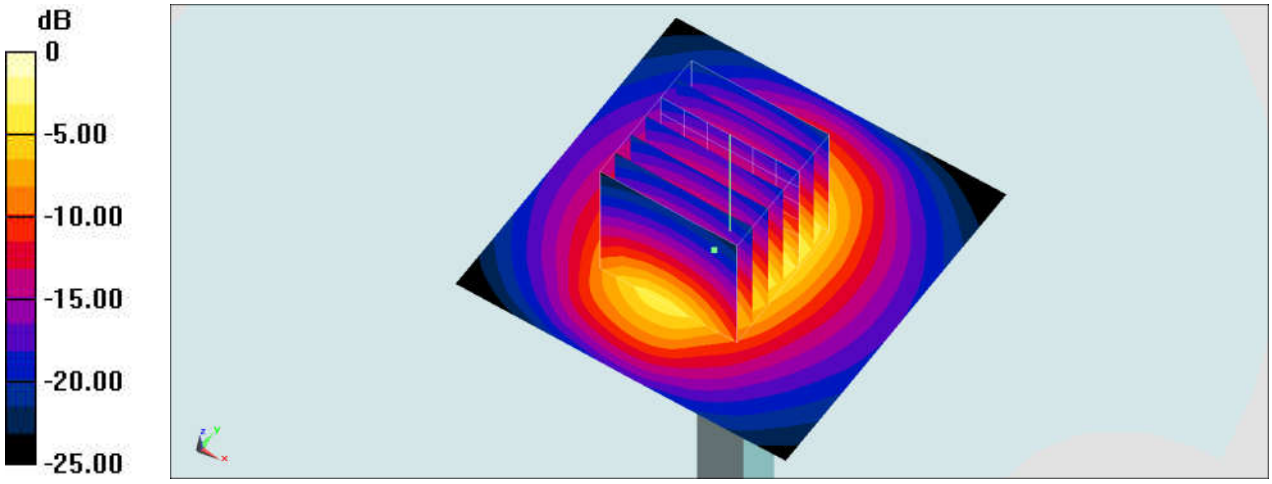

0 dB = 17.7 W/kg = 12.48 dBW/kg

System Check_Head_2600MHz

DUT: D2600V2-1078

Communication System: CW; Frequency: 2600 MHz;Duty Cycle: 1:1
Medium: HSL_2600_200619 Medium parameters used: f = 2600 MHz; σ = 2.02 S/m; ε_r = 37.994; ρ = 1000 kg/m^3
Ambient Temperature：23.6 ℃; Liquid Temperature：22.6 ℃

DASY5 Configuration:
- Probe: EX3DV4 - SN3642; ConvF(6.95, 6.95, 6.95) @ 2600 MHz; Calibrated: 2020/4/29
- Sensor-Surface: 1.4mm (Mechanical Surface Detection)
- Electronics: DAE4 Sn376; Calibrated: 2019/12/6
- Phantom: SAM_Left; Type: QD000P40CD; Serial: TP:1682
- Measurement SW: DASY52, Version 52.10 (4);SEMCAD X Version 14.6.14 (7483)

Pin=250mW/Area Scan (71x71x1): Interpolated grid: dx=1.200 mm, dy=1.200 mm
Maximum value of SAR (interpolated) = 23.7 W/kg

Pin=250mW/Zoom Scan (7x7x7)/Cube 0: Measurement grid: dx=5mm, dy=5mm, dz=5mm
Reference Value = 108.3 V/m; Power Drift = -0.06 dB
Peak SAR (extrapolated) = 28.6 W/kg
SAR(1 g) = 14.4 W/kg; SAR(10 g) = 6.55 W/kg
Maximum value of SAR (measured) = 23.6 W/kg

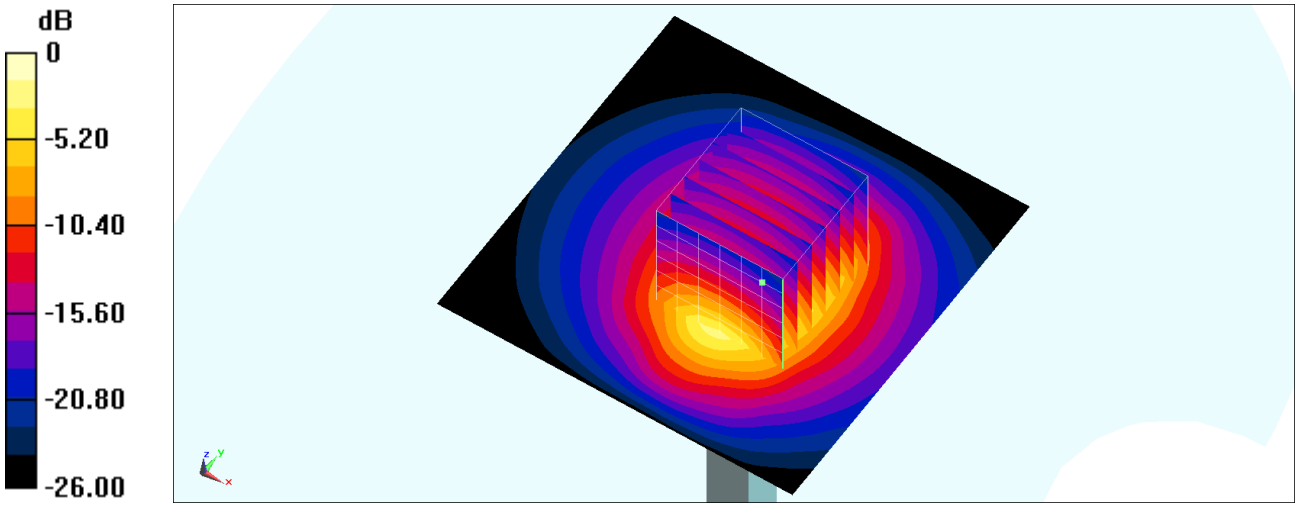

0 dB = 23.6 W/kg = 13.73 dBW/kg

System Check_Head_2600MHz

DUT: D2600V2-1078

Communication System: CW; Frequency: 2600 MHz;Duty Cycle: 1:1
Medium: HSL_2600_200620 Medium parameters used: f = 2600 MHz; σ = 2.01 S/m; ε_r = 37.814; ρ = 1000 kg/m^3
Ambient Temperature：23.8 ℃; Liquid Temperature：22.8 ℃

DASY5 Configuration:
- Probe: EX3DV4 - SN3925; ConvF(7.5, 7.5, 7.5) @ 2600 MHz; Calibrated: 2019/9/20
- Sensor-Surface: 1.4mm (Mechanical Surface Detection)
- Electronics: DAE4 Sn376; Calibrated: 2019/12/6
- Phantom: SAM_Left; Type: QD000P40CD; Serial: TP:1682
- Measurement SW: DASY52, Version 52.10 (4);SEMCAD X Version 14.6.14 (7483)

Pin=250mW/Area Scan (71x71x1): Interpolated grid: dx=1.200 mm, dy=1.200 mm
Maximum value of SAR (interpolated) = 26.2 W/kg

Pin=250mW/Zoom Scan (7x7x7)/Cube 0: Measurement grid: dx=5mm, dy=5mm, dz=5mm
Reference Value = 115.4 V/m; Power Drift = 0.03 dB
Peak SAR (extrapolated) = 32.4 W/kg
SAR(1 g) = 15 W/kg; SAR(10 g) = 6.69 W/kg
Maximum value of SAR (measured) = 25.8 W/kg

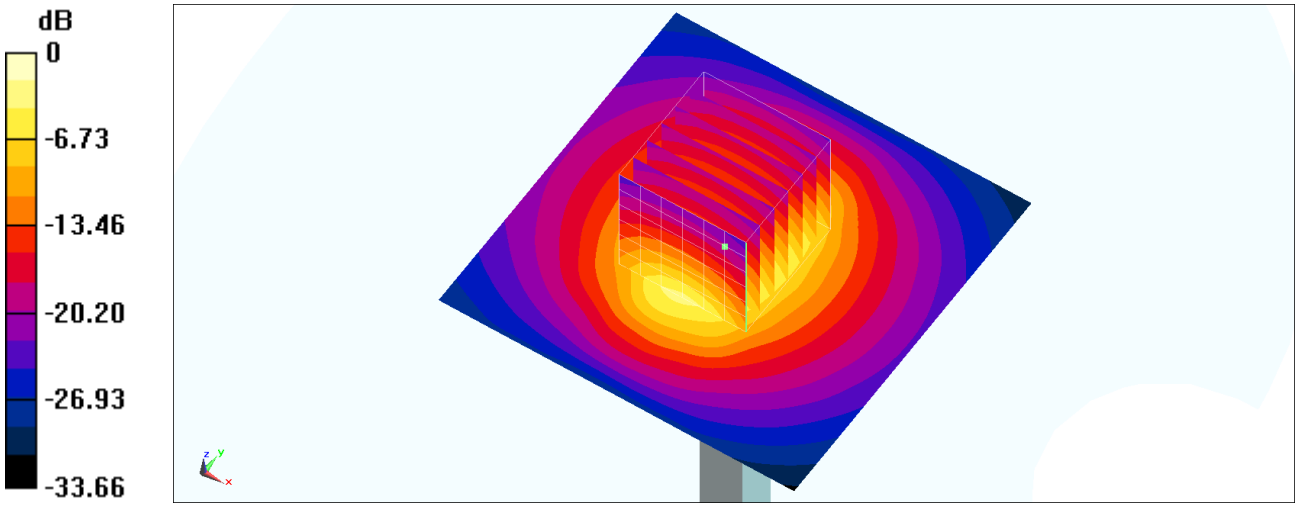

0 dB = 25.8 W/kg = 14.12 dBW/kg

System Check_Head_2600MHz

DUT: D2600V2-1078

Communication System: CW ; Frequency: 2600 MHz;Duty Cycle: 1:1
Medium: HSL_2600_200708 Medium parameters used: f = 2600 MHz; σ = 1.989 S/m; ε_r = 39.623; ρ = 1000 kg/m^3
Ambient Temperature：23.5 ℃; Liquid Temperature：22.5 ℃

DASY5 Configuration:
- Probe: EX3DV4 - SN3728; ConvF(7.08, 7.08, 7.08) @ 2600 MHz; Calibrated: 2020/2/4
- Sensor-Surface: 1.4mm (Mechanical Surface Detection)
- Electronics: DAE4 Sn699; Calibrated: 2020/2/26
- Phantom: SAM-Middle; Type: SAM; Serial: TP-1503
- Measurement SW: DASY52, Version 52.10 (4);SEMCAD X Version 14.6.14 (7483)

Pin=250mW/Area Scan (71x71x1): Interpolated grid: dx=1.200 mm, dy=1.200 mm
Maximum value of SAR (interpolated) = 26.0 W/kg

Pin=250mW/Zoom Scan (7x7x7)/Cube 0: Measurement grid: dx=5mm, dy=5mm, dz=5mm
Reference Value = 115.4 V/m; Power Drift = -0.11 dB
Peak SAR (extrapolated) = 31.7 W/kg
SAR(1 g) = 14.8 W/kg; SAR(10 g) = 6.51 W/kg
Maximum value of SAR (measured) = 25.4 W/kg

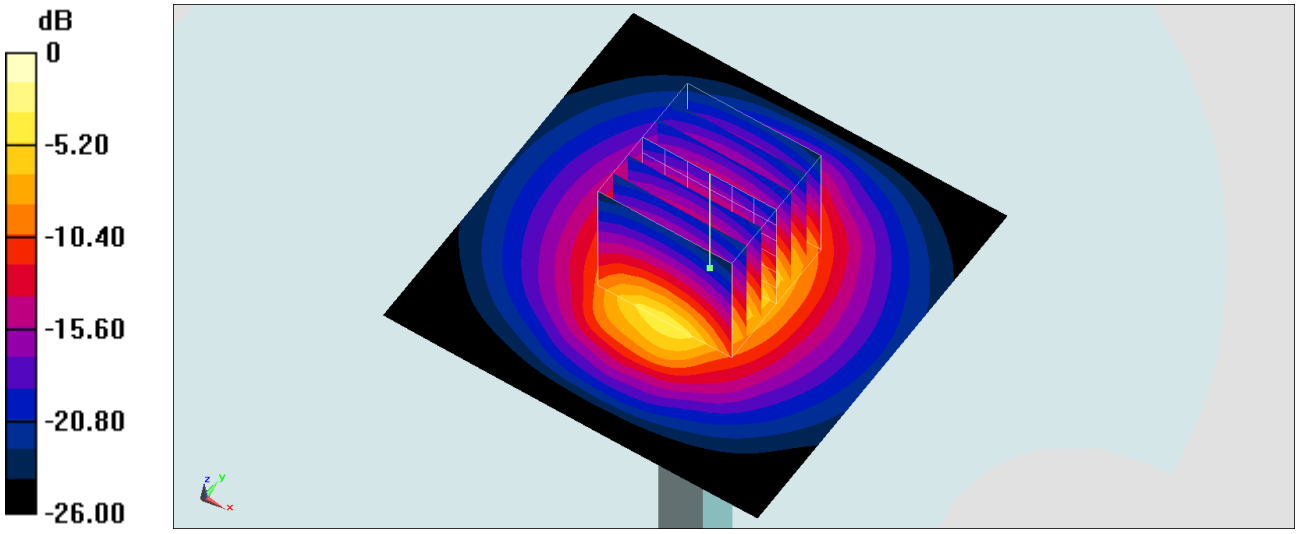

0 dB = 25.4 W/kg = 14.05 dBW/kg

System Check_Head_2600MHz

DUT: D2600V2-1078

Communication System: CW ; Frequency: 2600 MHz;Duty Cycle: 1:1
Medium: HSL_2600_200722 Medium parameters used: f = 2600 MHz; σ = 2.029 S/m; ε_r = 39.119; ρ = 1000 kg/m^3
Ambient Temperature：23.3 ℃; Liquid Temperature：22.3 ℃

DASY5 Configuration:
- Probe: EX3DV4 - SN3728; ConvF(7.08, 7.08, 7.08) @ 2600 MHz; Calibrated: 2020/2/4
- Sensor-Surface: 1.4mm (Mechanical Surface Detection)
- Electronics: DAE4 Sn699; Calibrated: 2020/2/26
- Phantom: SAM-Middle; Type: SAM; Serial: TP-1503
- Measurement SW: DASY52, Version 52.10 (4);SEMCAD X Version 14.6.14 (7483)

Pin=250mW/Area Scan (71x71x1): Interpolated grid: dx=1.200 mm, dy=1.200 mm
Maximum value of SAR (interpolated) = 27.3 W/kg

Pin=250mW/Zoom Scan (7x7x7)/Cube 0: Measurement grid: dx=5mm, dy=5mm, dz=5mm
Reference Value = 119.5 V/m; Power Drift = -0.13 dB
Peak SAR (extrapolated) = 34.4 W/kg
SAR(1 g) = 15.5 W/kg; SAR(10 g) = 6.87 W/kg
Maximum value of SAR (measured) = 27.2 W/kg

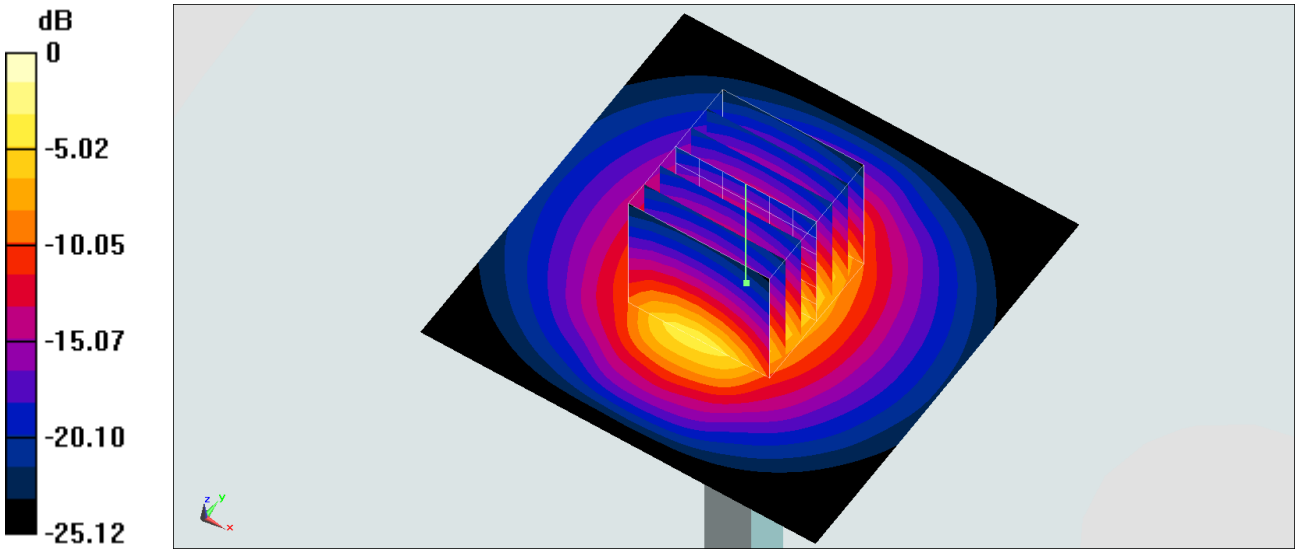

0 dB = 27.2 W/kg = 14.35 dBW/kg

System Check_Head_2600MHz

DUT: D2600V2-1078

Communication System: CW ; Frequency: 2600 MHz;Duty Cycle: 1:1
Medium: HSL_2600_200725 Medium parameters used: f = 2600 MHz; σ = 2.031 S/m; ε_r = 39.132; ρ = 1000 kg/m^3
Ambient Temperature：23.6 ℃; Liquid Temperature：22.6 ℃

DASY5 Configuration:
- Probe: EX3DV4 - SN3728; ConvF(7.08, 7.08, 7.08) @ 2600 MHz; Calibrated: 2020/2/4
- Sensor-Surface: 1.4mm (Mechanical Surface Detection)
- Electronics: DAE4 Sn699; Calibrated: 2020/2/26
- Phantom: SAM-Middle; Type: SAM; Serial: TP-1503
- Measurement SW: DASY52, Version 52.10 (4);SEMCAD X Version 14.6.14 (7483)

Pin=250mW/Area Scan (71x71x1): Interpolated grid: dx=1.200 mm, dy=1.200 mm
Maximum value of SAR (interpolated) = 26.6 W/kg

Pin=250mW/Zoom Scan (7x7x7)/Cube 0: Measurement grid: dx=5mm, dy=5mm, dz=5mm
Reference Value = 115.4 V/m; Power Drift = -0.07 dB
Peak SAR (extrapolated) = 32.4 W/kg
SAR(1 g) = 15.1 W/kg; SAR(10 g) = 6.64 W/kg
Maximum value of SAR (measured) = 25.9 W/kg

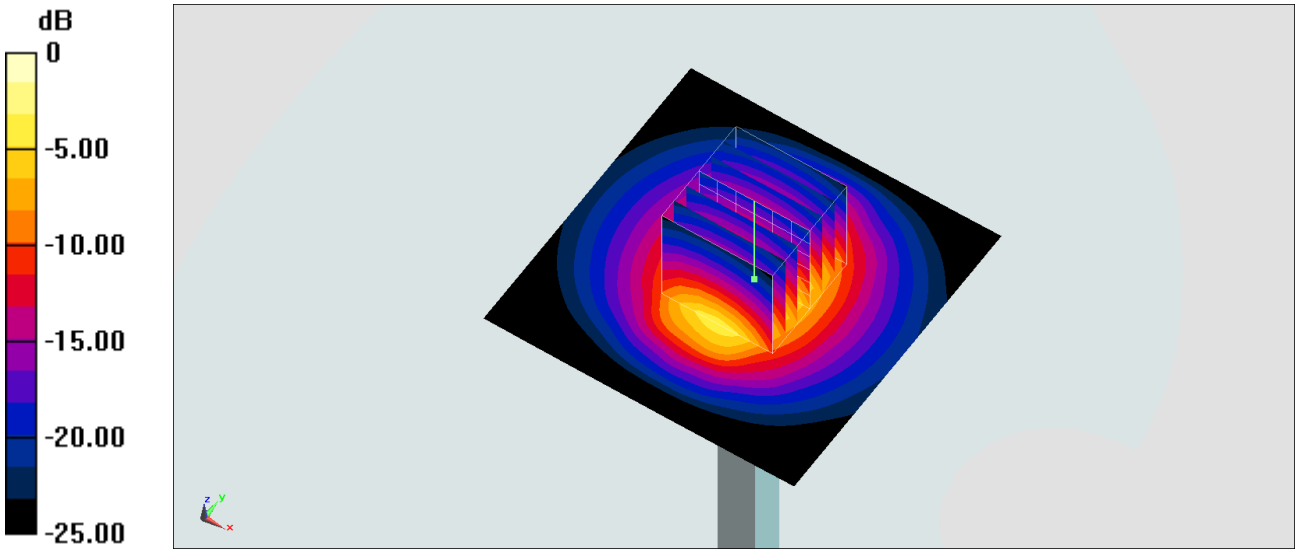

0 dB = 25.9 W/kg = 14.13 dBW/kg

System Check_Head_3500MHz

DUT: D3500V2-1014

Communication System: CW; Frequency: 3500 MHz;Duty Cycle: 1:1
Medium: HSL_3500_200722 Medium parameters used: f = 3500 MHz; σ = 3.041 S/m; ε_r = 38.575; ρ = 1000 kg/m^3
Ambient Temperature：23.3 ℃; Liquid Temperature：22.3 ℃

DASY5 Configuration:
- Probe: EX3DV4 - SN3642; ConvF(6.6, 6.6, 6.6) @ 3500 MHz; Calibrated: 2020/4/29
- Sensor-Surface: 1.4mm (Mechanical Surface Detection)
- Electronics: DAE4 Sn376; Calibrated: 2019/12/6
- Phantom: SAM_Right; Type: SAM; Serial: TP:1681
- Measurement SW: DASY52, Version 52.10 (4);SEMCAD X Version 14.6.14 (7483)

Pin=100mW/Area Scan (71x71x1): Interpolated grid: dx=1.200 mm, dy=1.200 mm
Maximum value of SAR (interpolated) = 13.0 W/kg

Pin=100mW/Zoom Scan (7x7x7)/Cube 0: Measurement grid: dx=5mm, dy=5mm, dz=1.4mm
Reference Value = 69.93 V/m; Power Drift = -0.06 dB
Peak SAR (extrapolated) = 18.3 W/kg
SAR(1 g) = 6.68 W/kg; SAR(10 g) = 2.49 W/kg
Maximum value of SAR (measured) = 13.3 W/kg

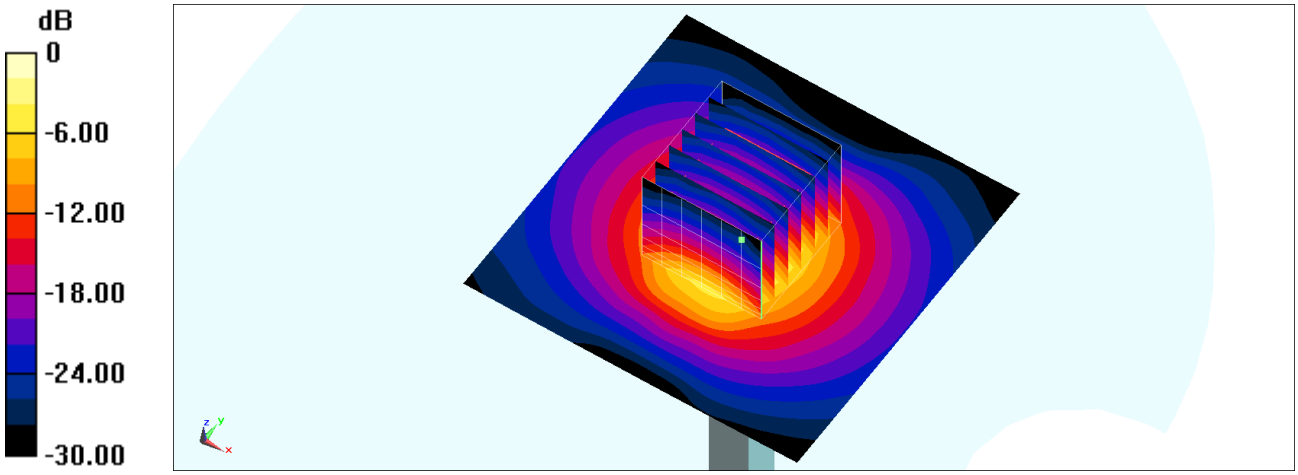

0 dB = 13.3 W/kg = 11.24 dBW/kg

System Check_Head_3500MHz

DUT: D3500V2-1014

Communication System: CW; Frequency: 3500 MHz;Duty Cycle: 1:1
Medium: HSL_3500_200726 Medium parameters used: f = 3500 MHz; σ = 3.033 S/m; ε_r = 38.472; ρ = 1000 kg/m^3
Ambient Temperature：23.2 ℃; Liquid Temperature：22.2 ℃

DASY5 Configuration:
- Probe: EX3DV4 - SN3642; ConvF(6.6, 6.6, 6.6) @ 3500 MHz; Calibrated: 2020/4/29
- Sensor-Surface: 1.4mm (Mechanical Surface Detection)
- Electronics: DAE4 Sn376; Calibrated: 2019/12/6
- Phantom: SAM_Right; Type: SAM; Serial: TP:1681
- Measurement SW: DASY52, Version 52.10 (4);SEMCAD X Version 14.6.14 (7483)

Pin=100mW/Area Scan (71x71x1): Interpolated grid: dx=1.200 mm, dy=1.200 mm
Maximum value of SAR (interpolated) = 12.9 W/kg

Pin=100mW/Zoom Scan (7x7x7)/Cube 0: Measurement grid: dx=5mm, dy=5mm, dz=1.4mm
Reference Value = 69.93 V/m; Power Drift = -0.06 dB
Peak SAR (extrapolated) = 18.2 W/kg
SAR(1 g) = 6.66 W/kg; SAR(10 g) = 2.48 W/kg
Maximum value of SAR (measured) = 13.3 W/kg

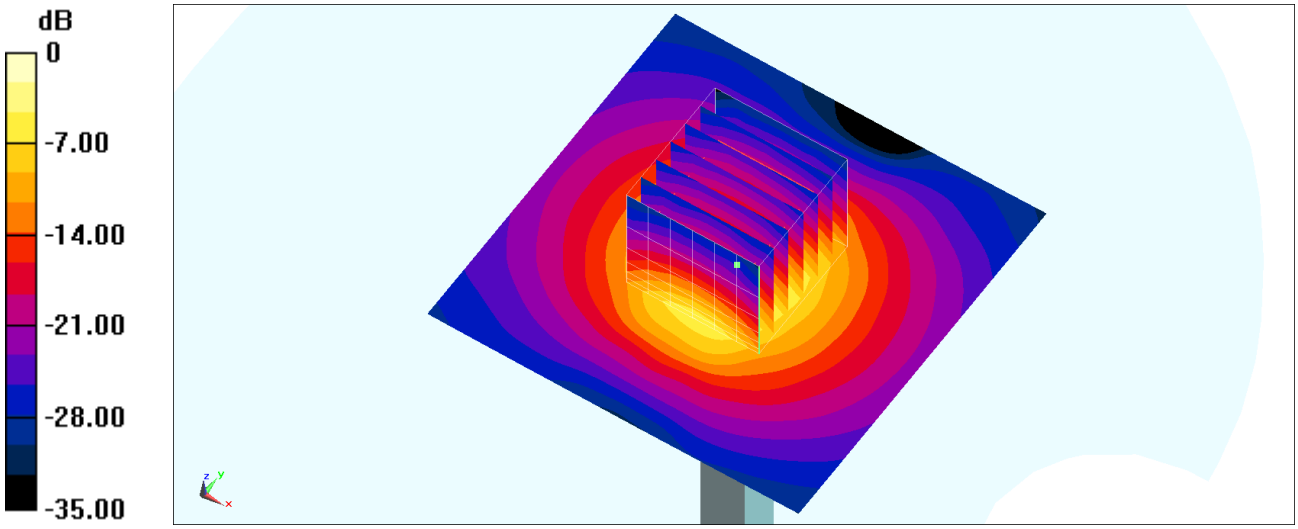

0 dB = 13.3 W/kg = 11.24 dBW/kg

System Check_Head_3500MHz

DUT: D3500V2-1014

Communication System: CW; Frequency: 3500 MHz;Duty Cycle: 1:1
Medium: HSL_3500_200727 Medium parameters used: f = 3500 MHz; σ = 2.908 S/m; ε_r = 37.88; ρ = 1000 kg/m^3
Ambient Temperature：23.2 ℃; Liquid Temperature：22.2 ℃

DASY5 Configuration:
- Probe: EX3DV4 - SN3642; ConvF(6.6, 6.6, 6.6) @ 3500 MHz; Calibrated: 2020/4/29
- Sensor-Surface: 1.4mm (Mechanical Surface Detection)
- Electronics: DAE4 Sn376; Calibrated: 2019/12/6
- Phantom: SAM_Right; Type: SAM; Serial: TP:1681
- Measurement SW: DASY52, Version 52.10 (4);SEMCAD X Version 14.6.14 (7483)

Pin=100mW/Area Scan (71x71x1): Interpolated grid: dx=1.200 mm, dy=1.200 mm
Maximum value of SAR (interpolated) = 12.6 W/kg

Pin=100mW/Zoom Scan (7x7x7)/Cube 0: Measurement grid: dx=5mm, dy=5mm, dz=1.4mm
Reference Value = 62.55 V/m; Power Drift = 0.13 dB
Peak SAR (extrapolated) = 17.3 W/kg
SAR(1 g) = 6.63 W/kg; SAR(10 g) = 2.53 W/kg
Maximum value of SAR (measured) = 12.7 W/kg

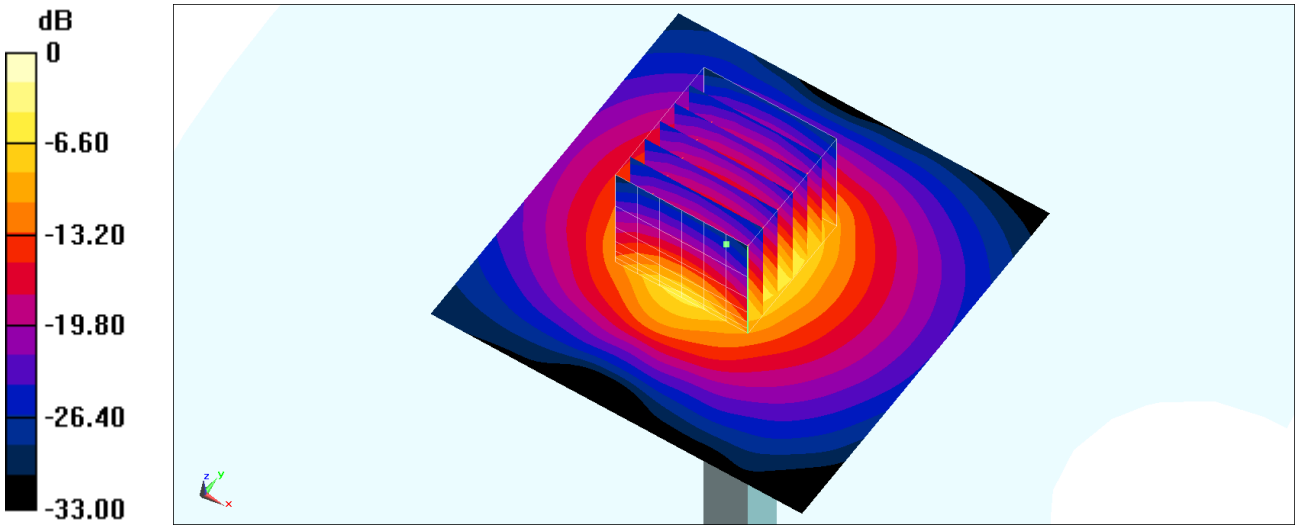

0 dB = 12.7 W/kg = 11.04 dBW/kg

System Check_Head_3700MHz

DUT: D3700V2-1006

Communication System: CW; Frequency: 3700 MHz;Duty Cycle: 1:1
Medium: HSL_3700_200722 Medium parameters used: f = 3700 MHz; σ = 3.258 S/m; ε_r = 38.373; ρ = 1000 kg/m^3
Ambient Temperature：23.3 ℃; Liquid Temperature：22.3 ℃

DASY5 Configuration:
- Probe: EX3DV4 - SN3642; ConvF(6.45, 6.45, 6.45) @ 3700 MHz; Calibrated: 2020/4/29
- Sensor-Surface: 1.4mm (Mechanical Surface Detection)
- Electronics: DAE4 Sn376; Calibrated: 2019/12/6
- Phantom: SAM_Right; Type: SAM; Serial: TP:1681
- Measurement SW: DASY52, Version 52.10 (4);SEMCAD X Version 14.6.14 (7483)

Pin=100mW/Area Scan (71x71x1): Interpolated grid: dx=1.200 mm, dy=1.200 mm
Maximum value of SAR (interpolated) = 13.1 W/kg

Pin=100mW/Zoom Scan (7x7x7)/Cube 0: Measurement grid: dx=5mm, dy=5mm, dz=1.4mm
Reference Value = 65.54 V/m; Power Drift = -0.04 dB
Peak SAR (extrapolated) = 18.7 W/kg
SAR(1 g) = 6.63 W/kg; SAR(10 g) = 2.4 W/kg
Maximum value of SAR (measured) = 13.5 W/kg

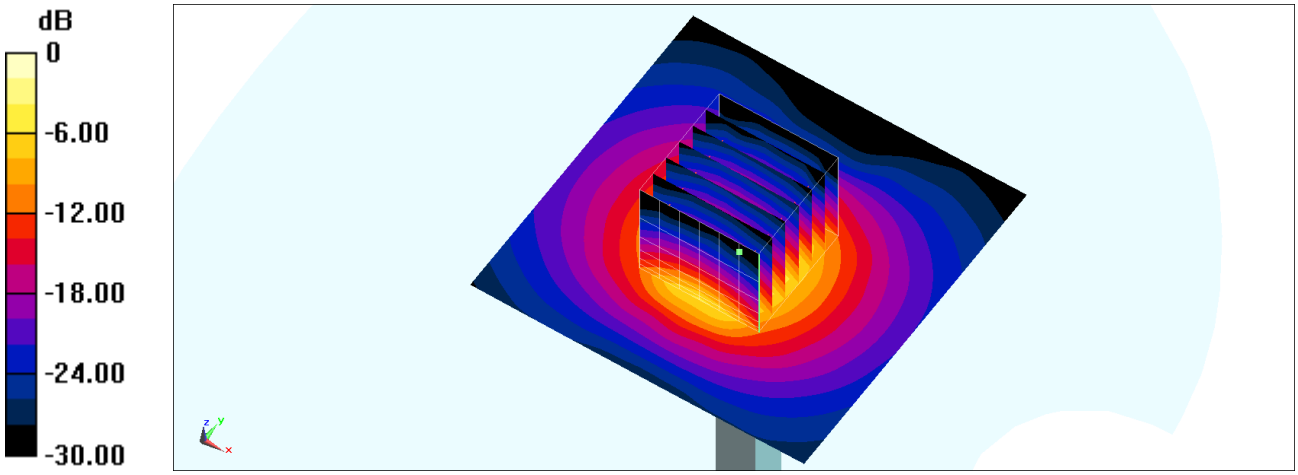

0 dB = 13.5 W/kg = 11.30 dBW/kg

System Check_Head_3700MHz

DUT: D3700V2-1006

Communication System: CW; Frequency: 3700 MHz;Duty Cycle: 1:1
Medium: HSL_3700_200726 Medium parameters used: f = 3700 MHz; σ = 3.249 S/m; ε_r = 38.27; ρ = 1000 kg/m^3
Ambient Temperature：23.2 ℃; Liquid Temperature：22.2 ℃

DASY5 Configuration:
- Probe: EX3DV4 - SN3642; ConvF(6.45, 6.45, 6.45) @ 3700 MHz; Calibrated: 2020/4/29
- Sensor-Surface: 1.4mm (Mechanical Surface Detection)
- Electronics: DAE4 Sn376; Calibrated: 2019/12/6
- Phantom: SAM_Right; Type: SAM; Serial: TP:1681
- Measurement SW: DASY52, Version 52.10 (4);SEMCAD X Version 14.6.14 (7483)

Pin=100mW/Area Scan (71x71x1): Interpolated grid: dx=1.200 mm, dy=1.200 mm
Maximum value of SAR (interpolated) = 13.1 W/kg

Pin=100mW/Zoom Scan (7x7x7)/Cube 0: Measurement grid: dx=5mm, dy=5mm, dz=1.4mm
Reference Value = 65.54 V/m; Power Drift = -0.04 dB
Peak SAR (extrapolated) = 18.7 W/kg
SAR(1 g) = 6.61 W/kg; SAR(10 g) = 2.39 W/kg
Maximum value of SAR (measured) = 13.5 W/kg

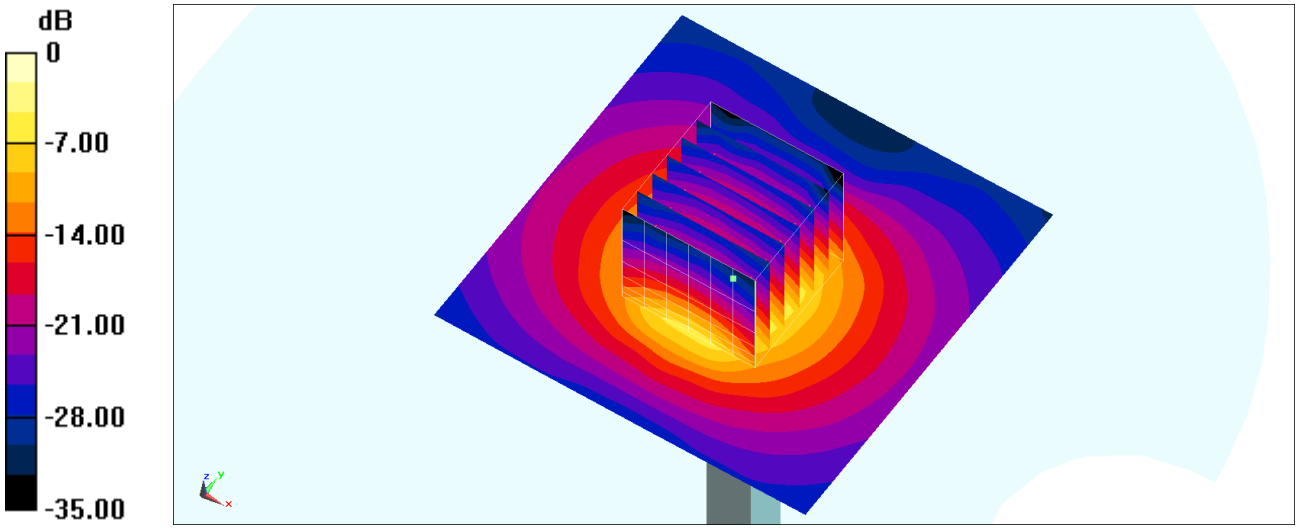

0 dB = 13.5 W/kg = 11.30 dBW/kg

System Check_Head_3700MHz

DUT: D3700V2-1006

Communication System: CW; Frequency: 3700 MHz;Duty Cycle: 1:1
Medium: HSL_3700_200727 Medium parameters used: f = 3700 MHz; σ = 3.116 S/m; ε_r = 37.678; ρ = 1000 kg/m^3
Ambient Temperature：23.2 ℃; Liquid Temperature：22.2 ℃

DASY5 Configuration:
- Probe: EX3DV4 - SN3642; ConvF(6.45, 6.45, 6.45) @ 3700 MHz; Calibrated: 2020/4/29
- Sensor-Surface: 1.4mm (Mechanical Surface Detection)
- Electronics: DAE4 Sn376; Calibrated: 2019/12/6
- Phantom: SAM_Right; Type: SAM; Serial: TP:1681
- Measurement SW: DASY52, Version 52.10 (4);SEMCAD X Version 14.6.14 (7483)

Pin=100mW/Area Scan (71x71x1): Interpolated grid: dx=1.200 mm, dy=1.200 mm
Maximum value of SAR (interpolated) = 12.5 W/kg

Pin=100mW/Zoom Scan (7x7x7)/Cube 0: Measurement grid: dx=5mm, dy=5mm, dz=1.4mm
Reference Value = 65.54 V/m; Power Drift = -0.19 dB
Peak SAR (extrapolated) = 17.9 W/kg
SAR(1 g) = 6.34 W/kg; SAR(10 g) = 2.29 W/kg
Maximum value of SAR (measured) = 12.9 W/kg

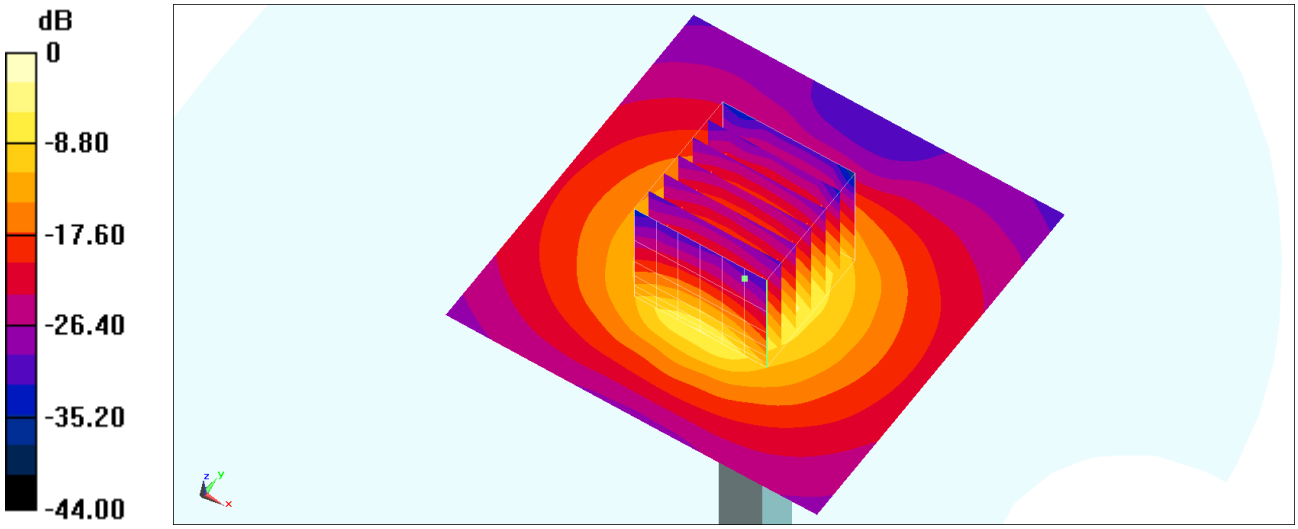

0 dB = 12.9 W/kg = 11.11 dBW/kg

System Check_Head_5250MHz

DUT: D5GHzV2-1006

Communication System: CW; Frequency: 5250 MHz;Duty Cycle: 1:1
Medium: HSL_5G_200711 Medium parameters used: f = 5250 MHz; σ = 4.588 S/m; ε_r = 37.497; ρ = 1000 kg/m^3
Ambient Temperature：23.5 ℃; Liquid Temperature：22.5 ℃

DASY5 Configuration:
- Probe: EX3DV4 - SN3728; ConvF(5.14, 5.14, 5.14) @ 5250 MHz; Calibrated: 2020/2/4
- Sensor-Surface: 1.4mm (Mechanical Surface Detection)
- Electronics: DAE4 Sn699; Calibrated: 2020/2/26
- Phantom: SAM_Left; Type: QD000P40CD; Serial: TP:1477
- Measurement SW: DASY52, Version 52.10 (4);SEMCAD X Version 14.6.14 (7483)

Pin=100mW/Area Scan (71x71x1): Interpolated grid: dx=1.000 mm, dy=1.000 mm
Maximum value of SAR (interpolated) = 22.2 W/kg

Pin=100mW/Zoom Scan (7x7x7)/Cube 0: Measurement grid: dx=4mm, dy=4mm, dz=1.4mm
Reference Value = 78.88 V/m; Power Drift = -0.11 dB
Peak SAR (extrapolated) = 31.1 W/kg
SAR(1 g) = 7.7 W/kg; SAR(10 g) = 2.18 W/kg
Maximum value of SAR (measured) = 19.7 W/kg

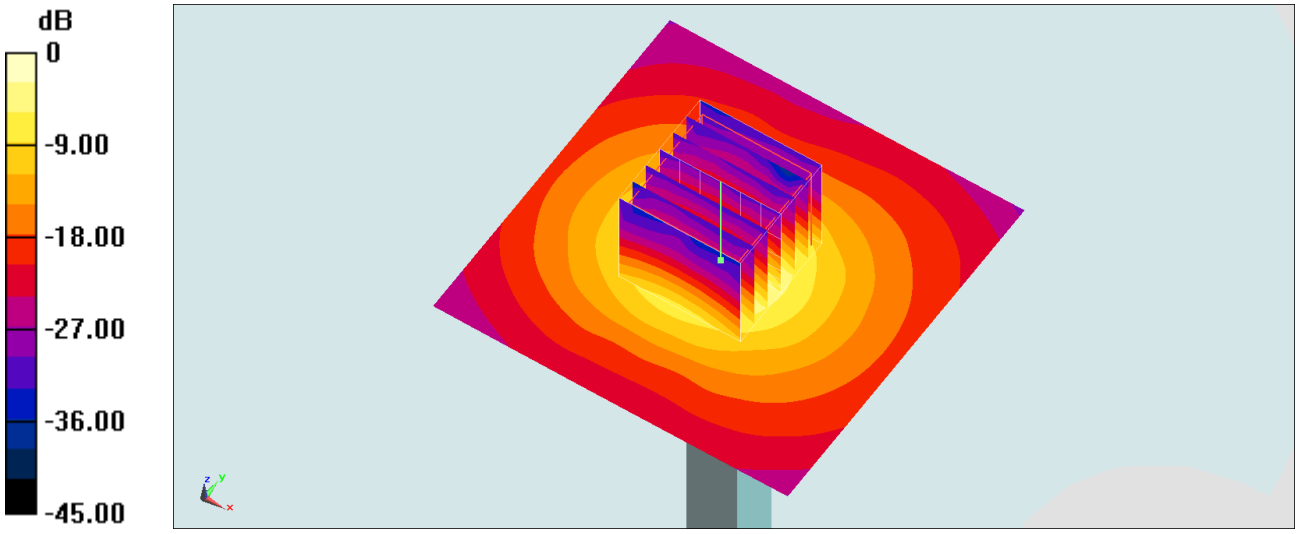

0 dB = 19.7 W/kg = 12.94 dBW/kg

System Check_Head_5250MHz

DUT: D5GHzV2-1006

Communication System: CW; Frequency: 5250 MHz;Duty Cycle: 1:1
Medium: HSL_5G_200715 Medium parameters used : f = 5250 MHz; σ = 4.775 S/m; ε_r = 36.903; ρ = 1000 kg/m^3
Ambient Temperature：23.3 ℃; Liquid Temperature：22.3 ℃

DASY5 Configuration:
- Probe: EX3DV4 - SN3728; ConvF(5.14, 5.14, 5.14) @ 5250 MHz; Calibrated: 2020/2/4
- Sensor-Surface: 1.4mm (Mechanical Surface Detection)
- Electronics: DAE4 Sn699; Calibrated: 2020/2/26
- Phantom: SAM_Left; Type: QD000P40CD; Serial: TP:1477
- Measurement SW: DASY52, Version 52.10 (4);SEMCAD X Version 14.6.14 (7483)

Pin=100mW/Area Scan (71x71x1): Interpolated grid: dx=1.000 mm, dy=1.000 mm
Maximum value of SAR (interpolated) = 19.2 W/kg

Pin=100mW/Zoom Scan (7x7x7)/Cube 0: Measurement grid: dx=4mm, dy=4mm, dz=1.4mm
Reference Value = 60.27 V/m; Power Drift = -0.12 dB
Peak SAR (extrapolated) = 29.2 W/kg
SAR(1 g) = 7.64 W/kg; SAR(10 g) = 2.18 W/kg
Maximum value of SAR (measured) = 19.3 W/kg

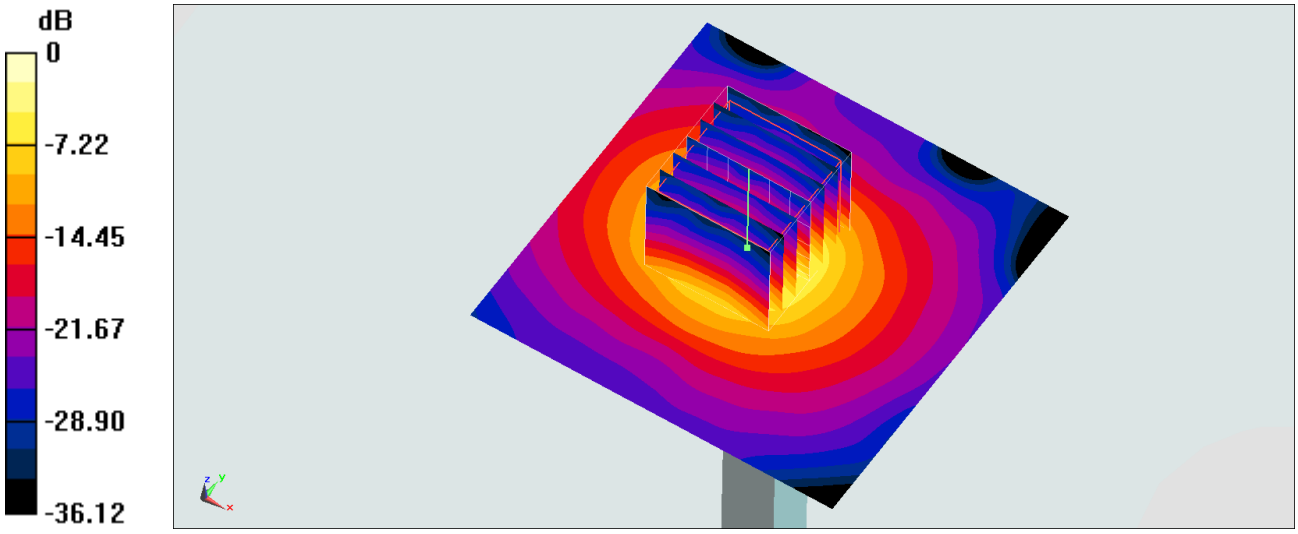

0 dB = 19.3 W/kg = 12.86 dBW/kg

System Check_Head_5250MHz

DUT: D5GHzV2-1006

Communication System: CW; Frequency: 5250 MHz;Duty Cycle: 1:1
Medium: HSL_5G_200716 Medium parameters used: f = 5250 MHz; σ = 4.508 S/m; ε_r = 35.612; ρ = 1000 kg/m^3
Ambient Temperature：23.4 ℃; Liquid Temperature：22.4 ℃

DASY5 Configuration:
- Probe: EX3DV4 - SN3728; ConvF(5.14, 5.14, 5.14) @ 5250 MHz; Calibrated: 2020/2/4
- Sensor-Surface: 1.4mm (Mechanical Surface Detection)
- Electronics: DAE4 Sn699; Calibrated: 2020/2/26
- Phantom: SAM_Left; Type: QD000P40CD; Serial: TP:1477
- Measurement SW: DASY52, Version 52.10 (4);SEMCAD X Version 14.6.14 (7483)

Pin=100mW/Area Scan (71x71x1): Interpolated grid: dx=1.000 mm, dy=1.000 mm
Maximum value of SAR (interpolated) = 18.1 W/kg

Pin=100mW/Zoom Scan (7x7x7)/Cube 0: Measurement grid: dx=4mm, dy=4mm, dz=1.4mm
Reference Value = 71.07 V/m; Power Drift = 0.07 dB
Peak SAR (extrapolated) = 28.2 W/kg
SAR(1 g) = 7.53 W/kg; SAR(10 g) = 2.12 W/kg
Maximum value of SAR (measured) = 18.0 W/kg

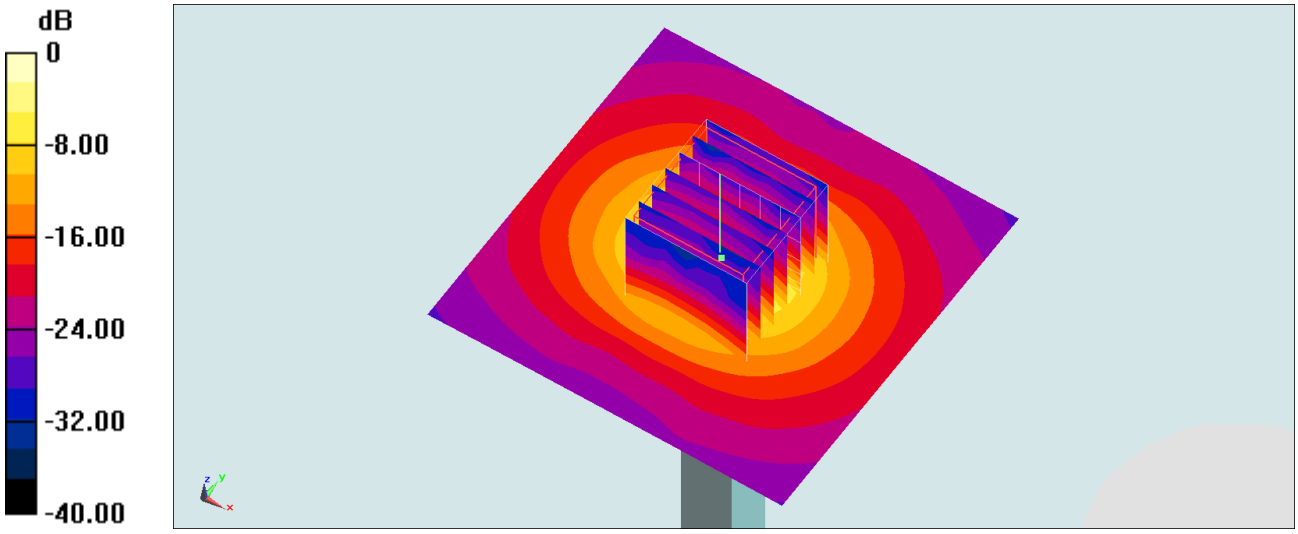

0 dB = 18.0 W/kg = 12.55 dBW/kg

System Check_Head_5250MHz

DUT: D5GHzV2-1006

Communication System: CW; Frequency: 5250 MHz;Duty Cycle: 1:1
Medium: HSL_5G_200729 Medium parameters used: f = 5250 MHz; σ = 4.634 S/m; ε_r = 36.648; ρ = 1000 kg/m^3
Ambient Temperature：23.5 ℃; Liquid Temperature：22.5 ℃

DASY5 Configuration:
- Probe: EX3DV4 - SN3642; ConvF(4.43, 4.43, 4.43) @ 5250 MHz; Calibrated: 2020/4/29
- Sensor-Surface: 1.4mm (Mechanical Surface Detection)
- Electronics: DAE4 Sn376; Calibrated: 2019/12/6
- Phantom: SAM_Right; Type: SAM; Serial: TP:1681
- Measurement SW: DASY52, Version 52.10 (4);SEMCAD X Version 14.6.14 (7483)

Pin=100mW/Area Scan (71x71x1): Interpolated grid: dx=1.000 mm, dy=1.000 mm
Maximum value of SAR (interpolated) = 22.2 W/kg

Pin=100mW/Zoom Scan (7x7x7)/Cube 0: Measurement grid: dx=4mm, dy=4mm, dz=1.4mm
Reference Value = 75.79 V/m; Power Drift = -0.07 dB
Peak SAR (extrapolated) = 36.4 W/kg
SAR(1 g) = 8.72 W/kg; SAR(10 g) = 2.36 W/kg
Maximum value of SAR (measured) = 22.3 W/kg

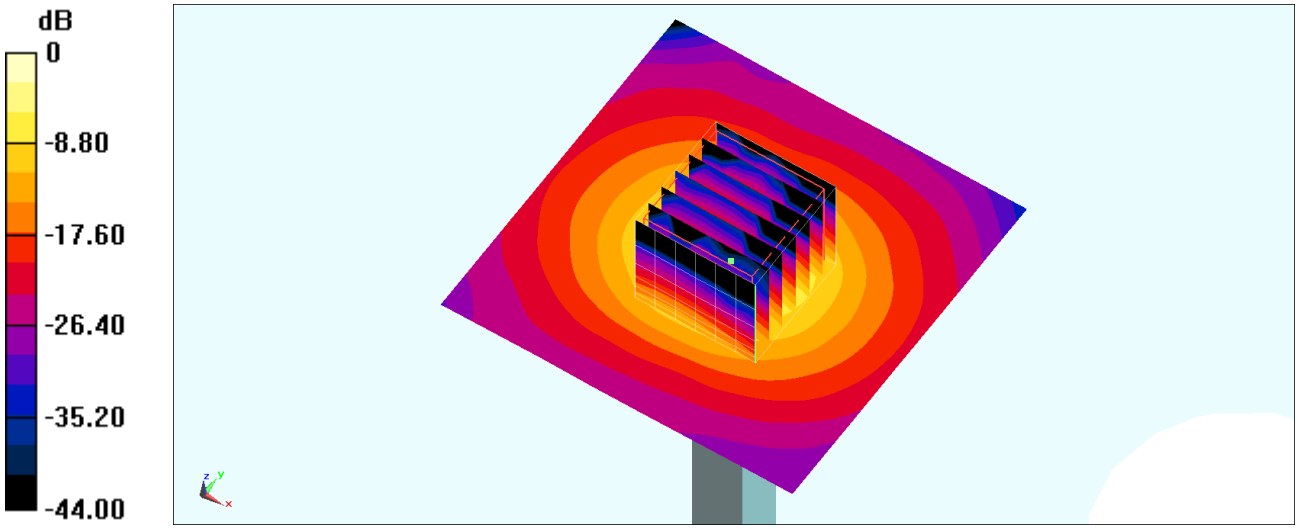

0 dB = 22.3 W/kg = 13.48 dBW/kg

System Check_Head_5250MHz

DUT: D5GHzV2-1006

Communication System: CW; Frequency: 5250 MHz;Duty Cycle: 1:1
Medium: HSL_5G_200731 Medium parameters used : f = 5250 MHz; σ = 4.734 S/m; ε_r = 36.623; ρ = 1000 kg/m^3
Ambient Temperature：23.5 ℃; Liquid Temperature：22.5 ℃

DASY5 Configuration:
- Probe: EX3DV4 - SN3642; ConvF(4.43, 4.43, 4.43) @ 5250 MHz; Calibrated: 2020/4/29
- Sensor-Surface: 1.4mm (Mechanical Surface Detection)
- Electronics: DAE4 Sn376; Calibrated: 2019/12/6
- Phantom: SAM_Right; Type: SAM; Serial: TP:1681
- Measurement SW: DASY52, Version 52.10 (4);SEMCAD X Version 14.6.14 (7483)

Pin=100mW/Area Scan (71x71x1): Interpolated grid: dx=1.000 mm, dy=1.000 mm
Maximum value of SAR (interpolated) = 20.6 W/kg

Pin=100mW/Zoom Scan (7x7x7)/Cube 0: Measurement grid: dx=4mm, dy=4mm, dz=1.4mm
Reference Value = 74.38 V/m; Power Drift = 0.03 dB
Peak SAR (extrapolated) = 34.1 W/kg
SAR(1 g) = 8.6 W/kg; SAR(10 g) = 2.36 W/kg
Maximum value of SAR (measured) = 21.3 W/kg

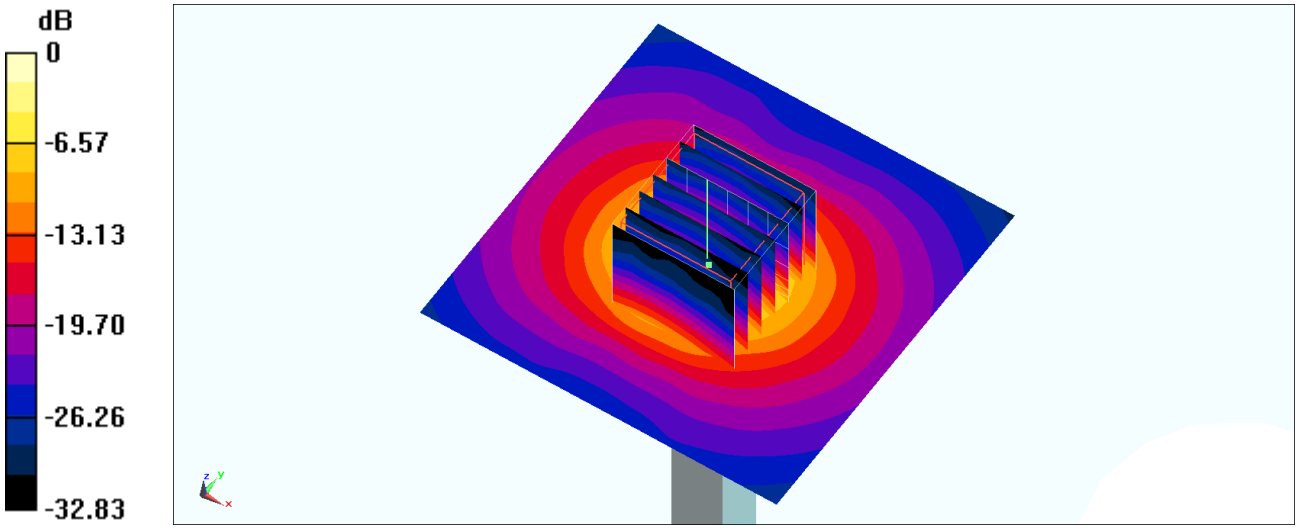

0 dB = 21.3 W/kg = 13.28 dBW/kg

System Check_Head_5250MHz

DUT: D5GHzV2-1006

Communication System: CW; Frequency: 5250 MHz;Duty Cycle: 1:1
Medium: HSL_5G_200801 Medium parameters used : f = 5250 MHz; σ = 4.716 S/m; ε_r = 36.688; ρ = 1000 kg/m^3
Ambient Temperature：23.4 ℃; Liquid Temperature：22.4 ℃

DASY5 Configuration:
- Probe: EX3DV4 - SN3642; ConvF(4.43, 4.43, 4.43) @ 5250 MHz; Calibrated: 2020/4/29
- Sensor-Surface: 1.4mm (Mechanical Surface Detection)
- Electronics: DAE4 Sn376; Calibrated: 2019/12/6
- Phantom: SAM_Right; Type: SAM; Serial: TP:1681
- Measurement SW: DASY52, Version 52.10 (4);SEMCAD X Version 14.6.14 (7483)

Pin=100mW/Area Scan (71x71x1): Interpolated grid: dx=1.000 mm, dy=1.000 mm
Maximum value of SAR (interpolated) = 21.1 W/kg

Pin=100mW/Zoom Scan (7x7x7)/Cube 0: Measurement grid: dx=4mm, dy=4mm, dz=1.4mm
Reference Value = 56.45 V/m; Power Drift = 0.14 dB
Peak SAR (extrapolated) = 34.5 W/kg
SAR(1 g) = 8.51 W/kg; SAR(10 g) = 2.34 W/kg
Maximum value of SAR (measured) = 21.0 W/kg

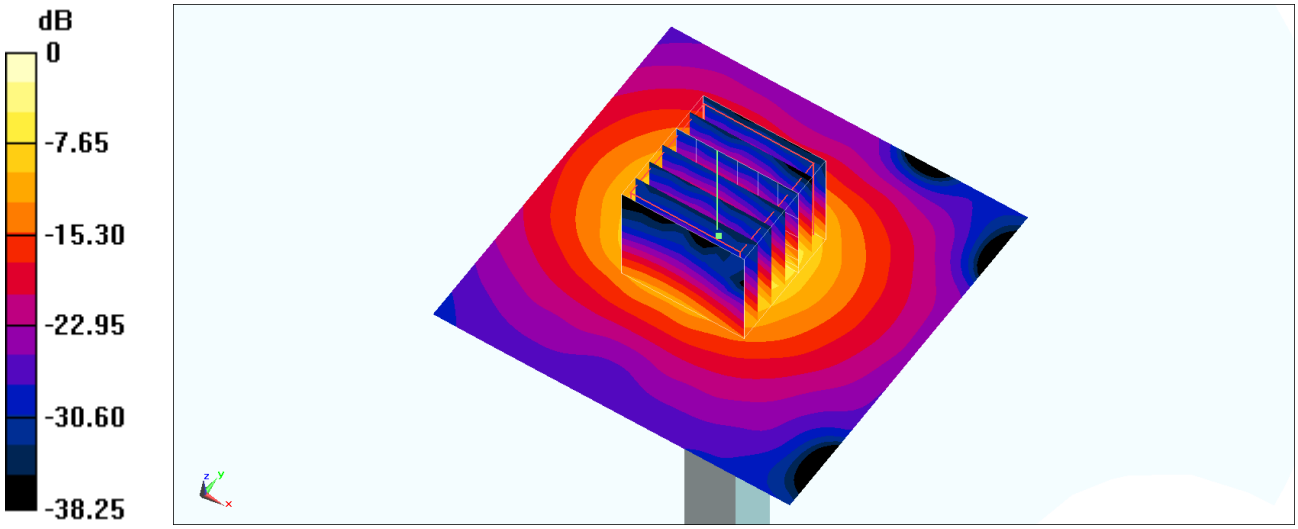

0 dB = 21.0 W/kg = 13.22 dBW/kg

System Check_Head_5600MHz

DUT: D5GHzV2-1006

Communication System: CW; Frequency: 5600 MHz;Duty Cycle: 1:1
Medium: HSL_5G_200711 Medium parameters used: f = 5600 MHz; σ = 4.949 S/m; ε_r = 37.088; ρ = 1000 kg/m^3
Ambient Temperature：23.5 ℃; Liquid Temperature：22.5 ℃

DASY5 Configuration:
- Probe: EX3DV4 - SN3728; ConvF(4.57, 4.57, 4.57) @ 5600 MHz; Calibrated: 2020/2/4
- Sensor-Surface: 1.4mm (Mechanical Surface Detection)
- Electronics: DAE4 Sn699; Calibrated: 2020/2/26
- Phantom: SAM_Left; Type: QD000P40CD; Serial: TP:1477
- Measurement SW: DASY52, Version 52.10 (4);SEMCAD X Version 14.6.14 (7483)

Pin=100mW/Area Scan (71x71x1): Interpolated grid: dx=1.000 mm, dy=1.000 mm
Maximum value of SAR (interpolated) = 21.2 W/kg

Pin=100mW/Zoom Scan (7x7x7)/Cube 0: Measurement grid: dx=4mm, dy=4mm, dz=1.4mm
Reference Value = 73.33 V/m; Power Drift = -0.12 dB
Peak SAR (extrapolated) = 37.0 W/kg
SAR(1 g) = 8.39 W/kg; SAR(10 g) = 2.37 W/kg
Maximum value of SAR (measured) = 21.9 W/kg

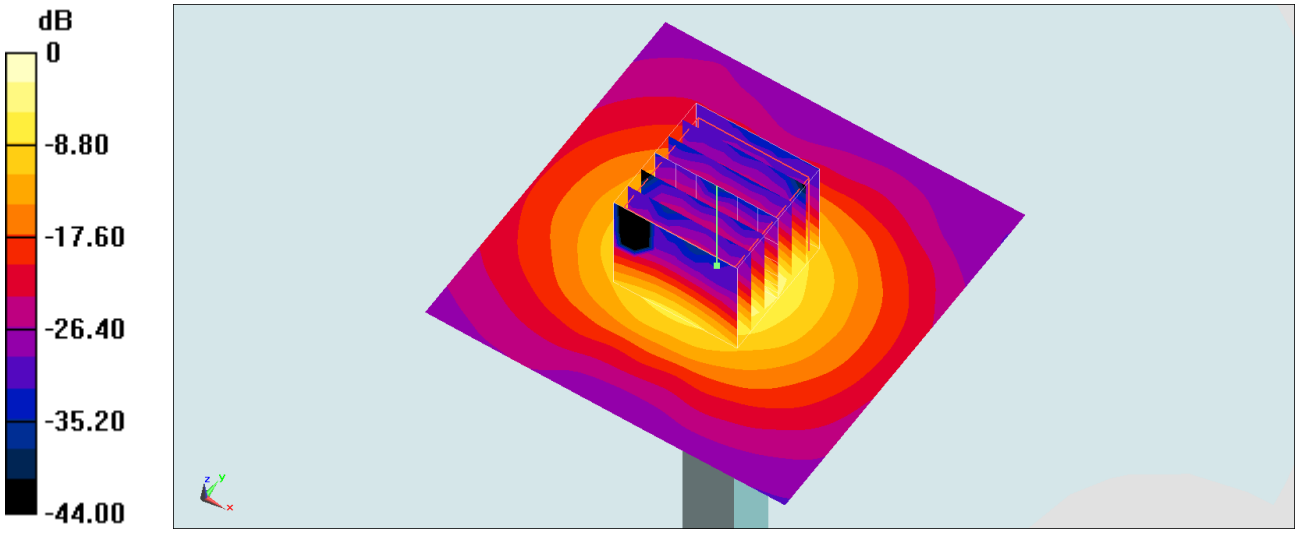

0 dB = 21.9 W/kg = 13.40 dBW/kg

System Check_Head_5600MHz

DUT: D5GHzV2-1006

Communication System: CW; Frequency: 5600 MHz;Duty Cycle: 1:1
Medium: HSL_5G_200715 Medium parameters used: f = 5600 MHz; σ = 5.119 S/m; ε_r = 36.434; ρ = 1000 kg/m^3
Ambient Temperature：23.3 ℃; Liquid Temperature：22.3 ℃

DASY5 Configuration:
- Probe: EX3DV4 - SN3728; ConvF(4.57, 4.57, 4.57) @ 5600 MHz; Calibrated: 2020/2/4
- Sensor-Surface: 1.4mm (Mechanical Surface Detection)
- Electronics: DAE4 Sn699; Calibrated: 2020/2/26
- Phantom: SAM_Left; Type: QD000P40CD; Serial: TP:1477
- Measurement SW: DASY52, Version 52.10 (4);SEMCAD X Version 14.6.14 (7483)

Pin=100mW/Area Scan (71x71x1): Interpolated grid: dx=1.000 mm, dy=1.000 mm
Maximum value of SAR (interpolated) = 20.3 W/kg

Pin=100mW/Zoom Scan (7x7x7)/Cube 0: Measurement grid: dx=4mm, dy=4mm, dz=1.4mm
Reference Value = 61.81 V/m; Power Drift = 0.15 dB
Peak SAR (extrapolated) = 33.8 W/kg
SAR(1 g) = 7.94 W/kg; SAR(10 g) = 2.19 W/kg
Maximum value of SAR (measured) = 19.9 W/kg

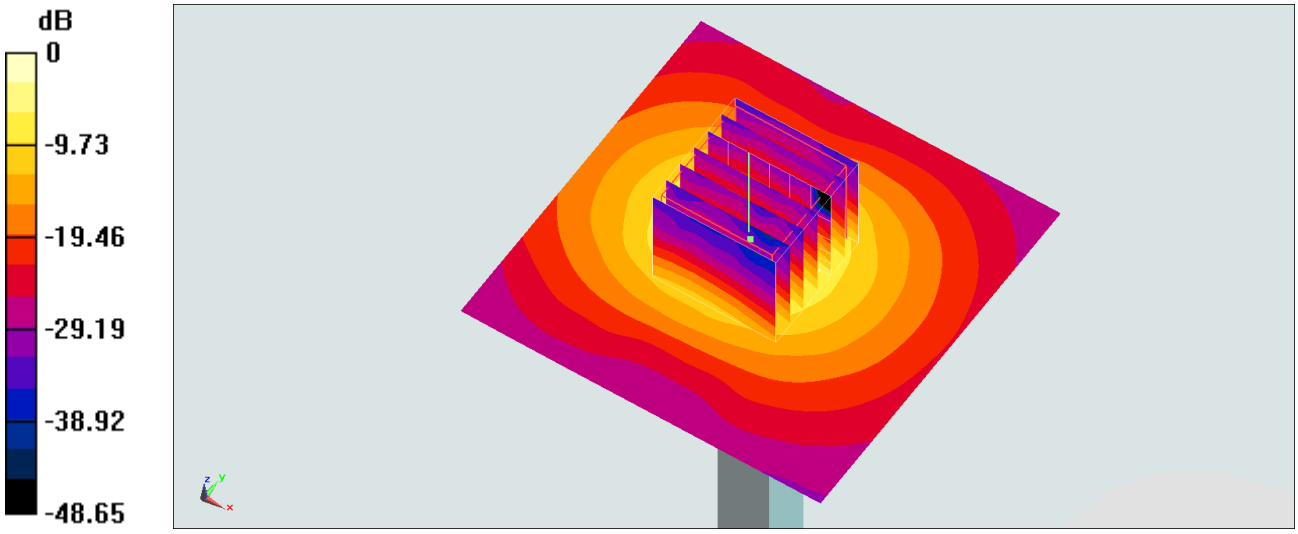

0 dB = 19.9 W/kg = 12.99 dBW/kg

System Check_Head_5600MHz

DUT: D5GHzV2-1006

Communication System: CW; Frequency: 5600 MHz;Duty Cycle: 1:1
Medium: HSL_5G_200716 Medium parameters used: f = 5600 MHz; σ = 4.848 S/m; ε_r = 35.122; ρ = 1000 kg/m^3
Ambient Temperature：23.4 ℃; Liquid Temperature：22.4 ℃

DASY5 Configuration:
- Probe: EX3DV4 - SN3728; ConvF(4.57, 4.57, 4.57) @ 5600 MHz; Calibrated: 2020/2/4
- Sensor-Surface: 1.4mm (Mechanical Surface Detection)
- Electronics: DAE4 Sn699; Calibrated: 2020/2/26
- Phantom: SAM_Left; Type: QD000P40CD; Serial: TP:1477
- Measurement SW: DASY52, Version 52.10 (4);SEMCAD X Version 14.6.14 (7483)

Pin=100mW/Area Scan (71x71x1): Interpolated grid: dx=1.000 mm, dy=1.000 mm
Maximum value of SAR (interpolated) = 24.0 W/kg

Pin=100mW/Zoom Scan (7x7x7)/Cube 0: Measurement grid: dx=4mm, dy=4mm, dz=1.4mm
Reference Value = 71.46 V/m; Power Drift = 0.09 dB
Peak SAR (extrapolated) = 31.4 W/kg
SAR(1 g) = 8.17 W/kg; SAR(10 g) = 2.35 W/kg
Maximum value of SAR (measured) = 20.5 W/kg

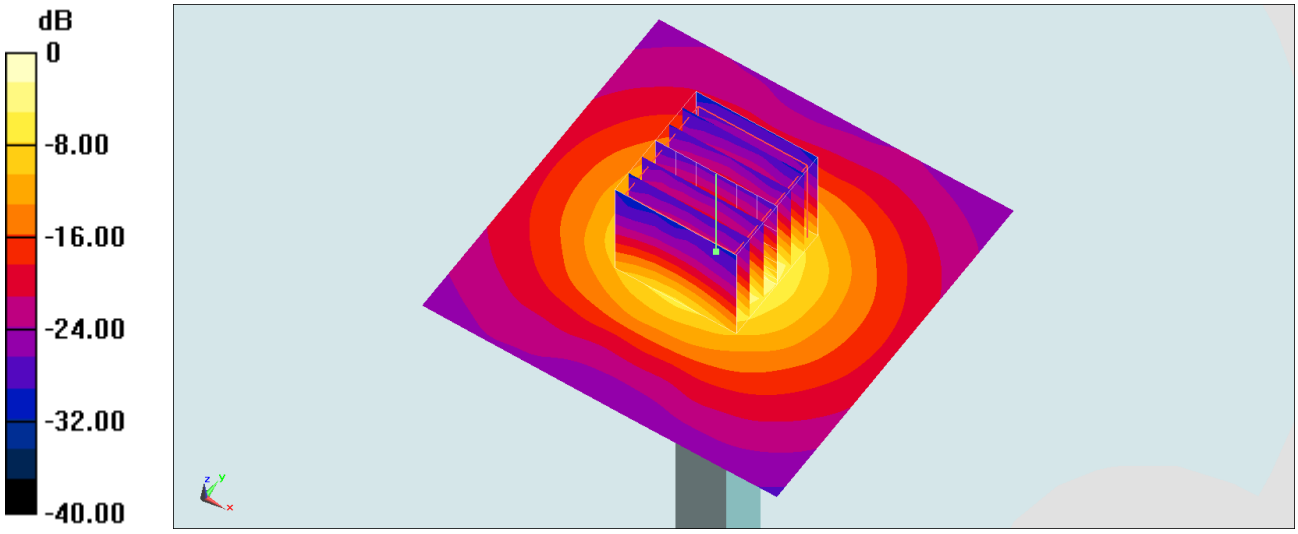

0 dB = 20.5 W/kg = 13.12 dBW/kg

System Check_Head_5600MHz

DUT: D5GHzV2-1006

Communication System: CW; Frequency: 5600 MHz;Duty Cycle: 1:1
Medium: HSL_5G_200717 Medium parameters used: f = 5600 MHz; σ = 5.019 S/m; ε_r = 36.838; ρ = 1000 kg/m^3
Ambient Temperature：23.6 ℃; Liquid Temperature：22.6 ℃

DASY5 Configuration:
- Probe: EX3DV4 - SN3728; ConvF(4.57, 4.57, 4.57) @ 5600 MHz; Calibrated: 2020/2/4
- Sensor-Surface: 1.4mm (Mechanical Surface Detection)
- Electronics: DAE4 Sn699; Calibrated: 2020/2/26
- Phantom: SAM_Left; Type: QD000P40CD; Serial: TP:1477
- Measurement SW: DASY52, Version 52.10 (4);SEMCAD X Version 14.6.14 (7483)

Pin=100mW/Area Scan (71x71x1): Interpolated grid: dx=1.000 mm, dy=1.000 mm
Maximum value of SAR (interpolated) = 24.9 W/kg

Pin=100mW/Zoom Scan (7x7x7)/Cube 0: Measurement grid: dx=4mm, dy=4mm, dz=1.4mm
Reference Value = 71.46 V/m; Power Drift = 0.01 dB
Peak SAR (extrapolated) = 32.5 W/kg
SAR(1 g) = 8.45 W/kg; SAR(10 g) = 2.43 W/kg
Maximum value of SAR (measured) = 21.3 W/kg

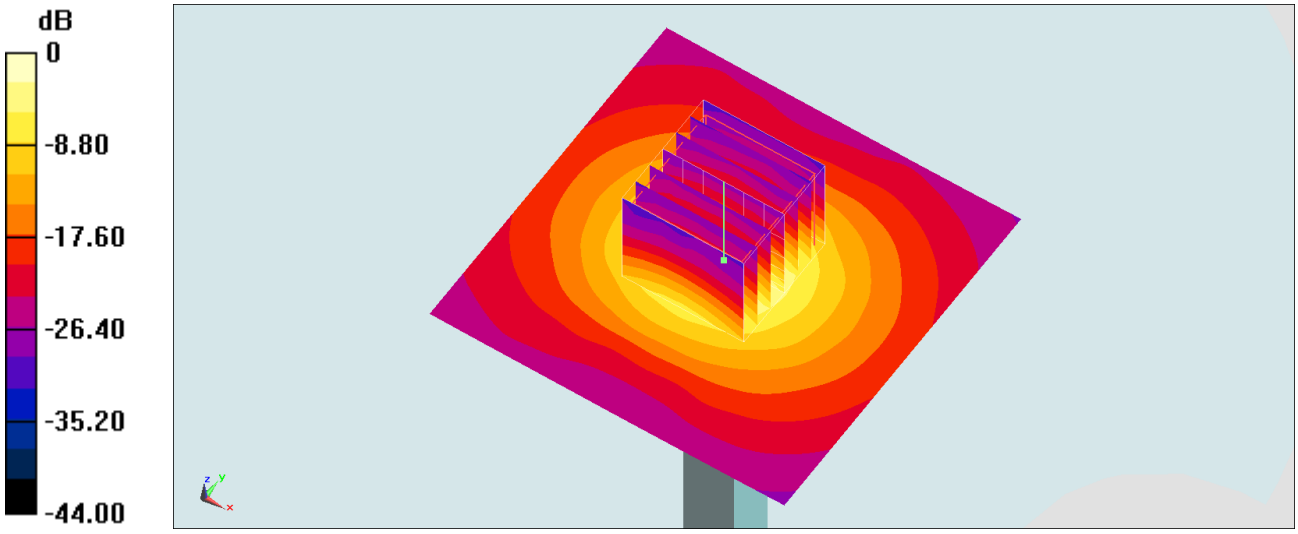

0 dB = 21.3 W/kg = 13.28 dBW/kg

Test Laboratory: Sporton International Inc. SAR/HAC Testing Lab Date: 2020/7/27

System Check_Head_5600MHz

DUT: D5GHzV2-1006

Communication System: CW; Frequency: 5600 MHz;Duty Cycle: 1:1
Medium: HSL_5G_200727 Medium parameters used: f = 5600 MHz; σ = 5.217 S/m; ε_r = 36.628; ρ = 1000 kg/m^3
Ambient Temperature：23.3 ℃； Liquid Temperature：22.3 ℃

DASY5 Configuration:
- Probe: EX3DV4 - SN3728; ConvF(4.57, 4.57, 4.57) @ 5600 MHz; Calibrated: 2020/2/4
- Sensor-Surface: 1.4mm (Mechanical Surface Detection)
- Electronics: DAE4 Sn699; Calibrated: 2020/2/26
- Phantom: SAM_Left; Type: QD000P40CB; Serial: S/N:1488
- Measurement SW: DASY52, Version 52.10 (4);SEMCAD X Version 14.6.14 (7483)

Pin=100mW/Area Scan (71x71x1): Interpolated grid: dx=1.000 mm, dy=1.000 mm
Maximum value of SAR (interpolated) = 20.7 W/kg

Pin=100mW/Zoom Scan (7x7x7)/Cube 0: Measurement grid: dx=4mm, dy=4mm, dz=1.4mm
Reference Value = 61.81 V/m; Power Drift = 0.09 dB
Peak SAR (extrapolated) = 34.5 W/kg
SAR(1 g) = 8.1 W/kg; SAR(10 g) = 2.23 W/kg
Maximum value of SAR (measured) = 20.3 W/kg

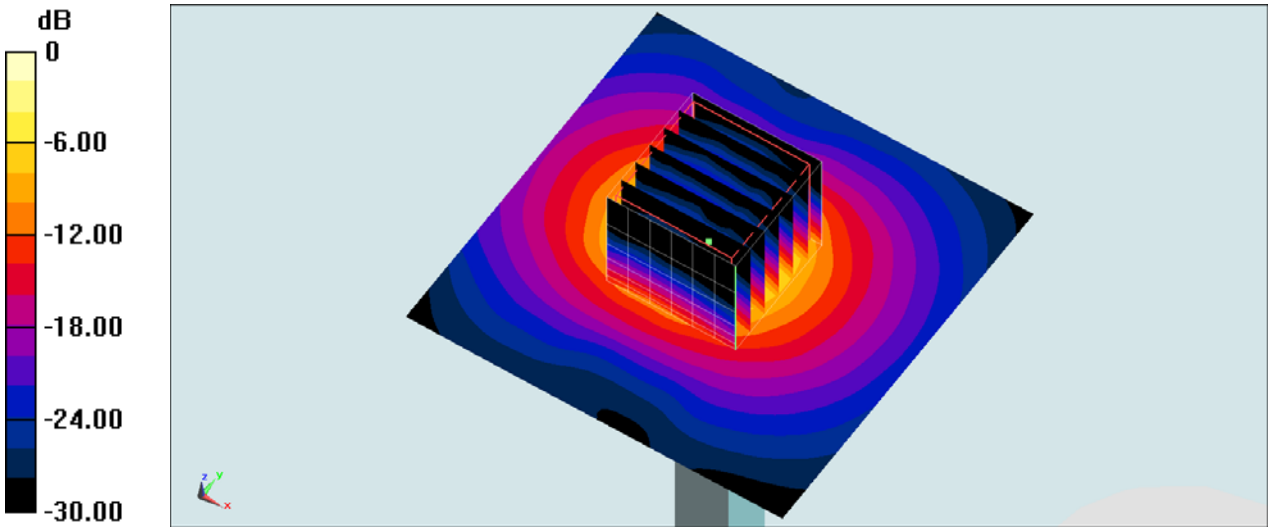

0 dB = 20.3 W/kg = 13.07 dBW/kg

System Check_Head_5600MHz

DUT: D5GHzV2-1006

Communication System: CW ; Frequency: 5600 MHz;Duty Cycle: 1:1
Medium: HSL_5G_200729 Medium parameters used: f = 5600 MHz; σ = 4.994 S/m; ε_r = 36.072; ρ = 1000 kg/m^3
Ambient Temperature：23.5 ℃; Liquid Temperature：22.5 ℃

DASY5 Configuration:
- Probe: EX3DV4 - SN3642; ConvF(4.19, 4.19, 4.19) @ 5600 MHz; Calibrated: 2020/4/29
- Sensor-Surface: 1.4mm (Mechanical Surface Detection)
- Electronics: DAE4 Sn376; Calibrated: 2019/12/6
- Phantom: SAM_Right; Type: SAM; Serial: TP:1681
- Measurement SW: DASY52, Version 52.10 (4);SEMCAD X Version 14.6.14 (7483)

Pin=100mW/Area Scan (71x71x1): Interpolated grid: dx=1.000 mm, dy=1.000 mm
Maximum value of SAR (interpolated) = 23.7 W/kg

Pin=100mW/Zoom Scan (7x7x7)/Cube 0: Measurement grid: dx=4mm, dy=4mm, dz=1.4mm
Reference Value = 74.75 V/m; Power Drift = -0.03 dB
Peak SAR (extrapolated) = 39.3 W/kg
SAR(1 g) = 8.81 W/kg; SAR(10 g) = 2.45 W/kg
Maximum value of SAR (measured) = 23.0 W/kg

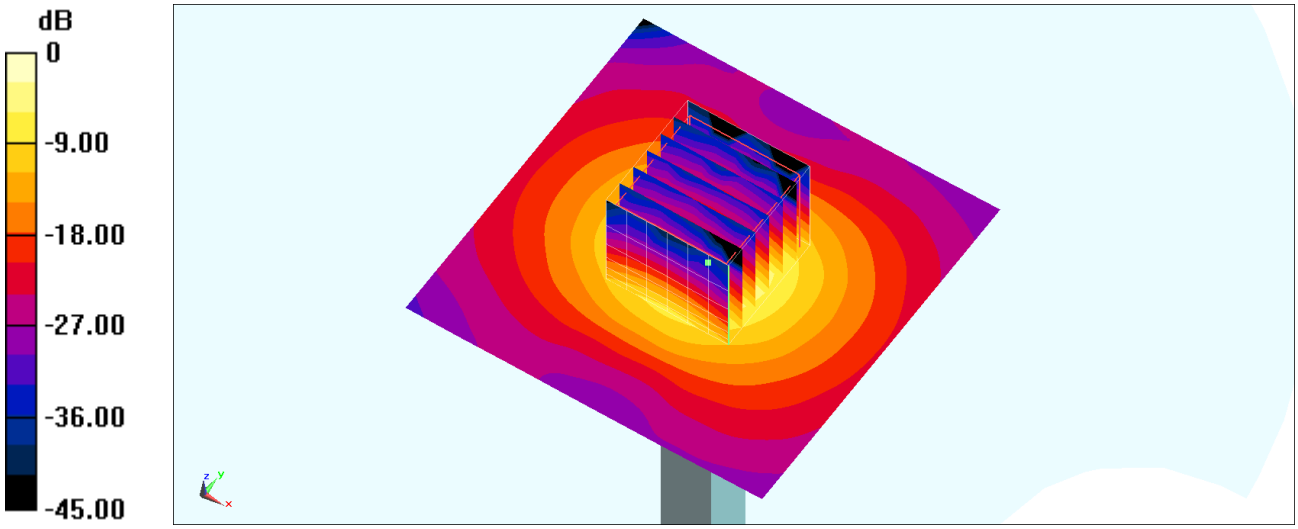

0 dB = 23.0 W/kg = 13.62 dBW/kg

System Check_Head_5600MHz

DUT: D5GHzV2-1006

Communication System: CW; Frequency: 5600 MHz;Duty Cycle: 1:1
Medium: HSL_5G_200731 Medium parameters used: f = 5600 MHz; σ = 5.107 S/m; ε_r = 36.113; ρ = 1000 kg/m^3
Ambient Temperature：23.5 ℃; Liquid Temperature：22.5 ℃

DASY5 Configuration:
- Probe: EX3DV4 - SN3642; ConvF(4.19, 4.19, 4.19) @ 5600 MHz; Calibrated: 2020/4/29
- Sensor-Surface: 1.4mm (Mechanical Surface Detection)
- Electronics: DAE4 Sn376; Calibrated: 2019/12/6
- Phantom: SAM_Right; Type: SAM; Serial: TP:1681
- Measurement SW: DASY52, Version 52.10 (4);SEMCAD X Version 14.6.14 (7483)

Pin=100mW/Area Scan (71x71x1): Interpolated grid: dx=1.000 mm, dy=1.000 mm
Maximum value of SAR (interpolated) = 21.9 W/kg

Pin=100mW/Zoom Scan (7x7x7)/Cube 0: Measurement grid: dx=4mm, dy=4mm, dz=1.4mm
Reference Value = 72.68 V/m; Power Drift = 0.15 dB
Peak SAR (extrapolated) = 37.0 W/kg
SAR(1 g) = 8.66 W/kg; SAR(10 g) = 2.36 W/kg
Maximum value of SAR (measured) = 22.0 W/kg

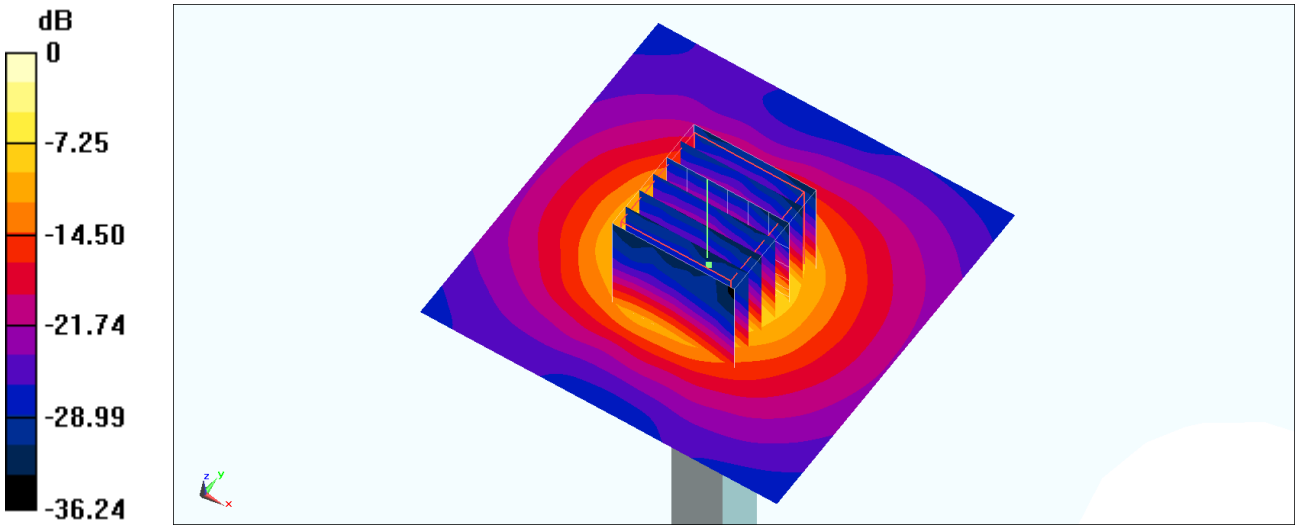

0 dB = 22.0 W/kg = 13.42 dBW/kg

System Check_Head_5600MHz

DUT: D5GHzV2-1006

Communication System: CW; Frequency: 5600 MHz;Duty Cycle: 1:1
Medium: HSL_5G_200801 Medium parameters used: f = 5600 MHz; σ = 5.082 S/m; ε_r = 36.206; ρ = 1000 kg/m^3
Ambient Temperature：23.4 ℃; Liquid Temperature：22.4 ℃

DASY5 Configuration:
- Probe: EX3DV4 - SN3642; ConvF(4.19, 4.19, 4.19) @ 5600 MHz; Calibrated: 2020/4/29
- Sensor-Surface: 1.4mm (Mechanical Surface Detection)
- Electronics: DAE4 Sn376; Calibrated: 2019/12/6
- Phantom: SAM_Right; Type: SAM; Serial: TP:1681
- Measurement SW: DASY52, Version 52.10 (4);SEMCAD X Version 14.6.14 (7483)

Pin=100mW/Area Scan (71x71x1): Interpolated grid: dx=1.000 mm, dy=1.000 mm
Maximum value of SAR (interpolated) = 21.8 W/kg

Pin=100mW/Zoom Scan (7x7x7)/Cube 0: Measurement grid: dx=4mm, dy=4mm, dz=1.4mm
Reference Value = 72.68 V/m; Power Drift = 0.17 dB
Peak SAR (extrapolated) = 36.8 W/kg
SAR(1 g) = 8.62 W/kg; SAR(10 g) = 2.35 W/kg
Maximum value of SAR (measured) = 21.9 W/kg

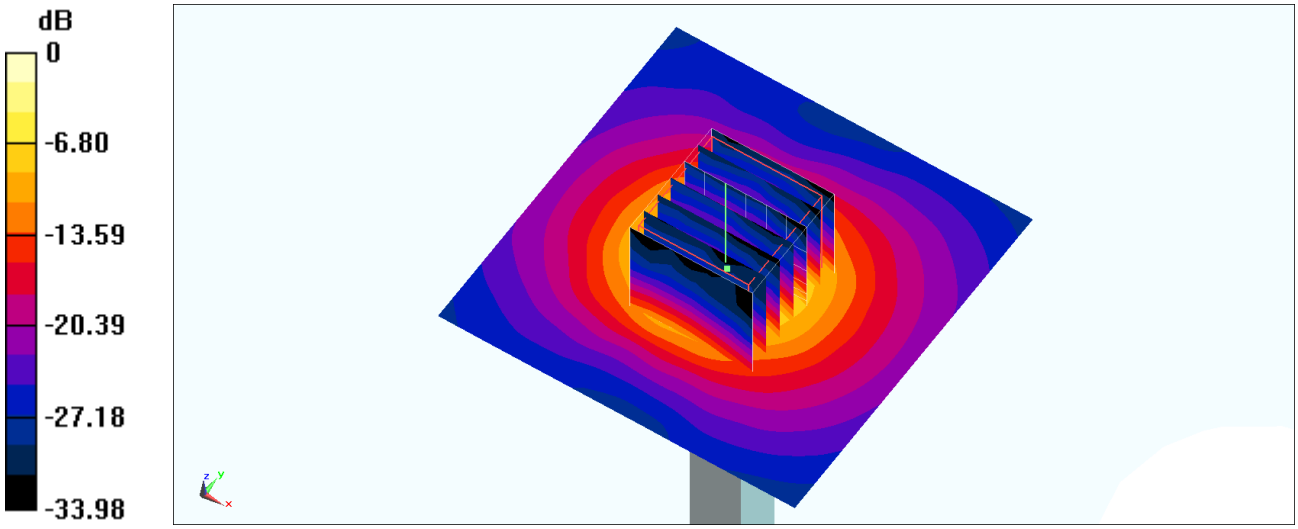

0 dB = 21.9 W/kg = 13.40 dBW/kg

System Check_Head_5600MHz

DUT: D5GHzV2-1006

Communication System: CW; Frequency: 5600 MHz;Duty Cycle: 1:1
Medium: HSL_5G_200804 Medium parameters used: f = 5600 MHz; σ = 5.181 S/m; ε_r = 36.452; ρ = 1000 kg/m^3
Ambient Temperature：23.5 ℃; Liquid Temperature：22.5 ℃

DASY5 Configuration:
- Probe: EX3DV4 - SN3642; ConvF(4.19, 4.19, 4.19) @ 5600 MHz; Calibrated: 2020/4/29
- Sensor-Surface: 1.4mm (Mechanical Surface Detection)
- Electronics: DAE4 Sn376; Calibrated: 2019/12/6
- Phantom: SAM_Right; Type: SAM; Serial: TP:1681
- Measurement SW: DASY52, Version 52.10 (4);SEMCAD X Version 14.6.14 (7483)

Pin=100mW/Area Scan (71x71x1): Interpolated grid: dx=1.000 mm, dy=1.000 mm
Maximum value of SAR (interpolated) = 21.2 W/kg

Pin=100mW/Zoom Scan (7x7x7)/Cube 0: Measurement grid: dx=4mm, dy=4mm, dz=1.4mm
Reference Value = 67.74 V/m; Power Drift = 0.15 dB
Peak SAR (extrapolated) = 38.0 W/kg
SAR(1 g) = 8.48 W/kg; SAR(10 g) = 2.31 W/kg
Maximum value of SAR (measured) = 21.4 W/kg

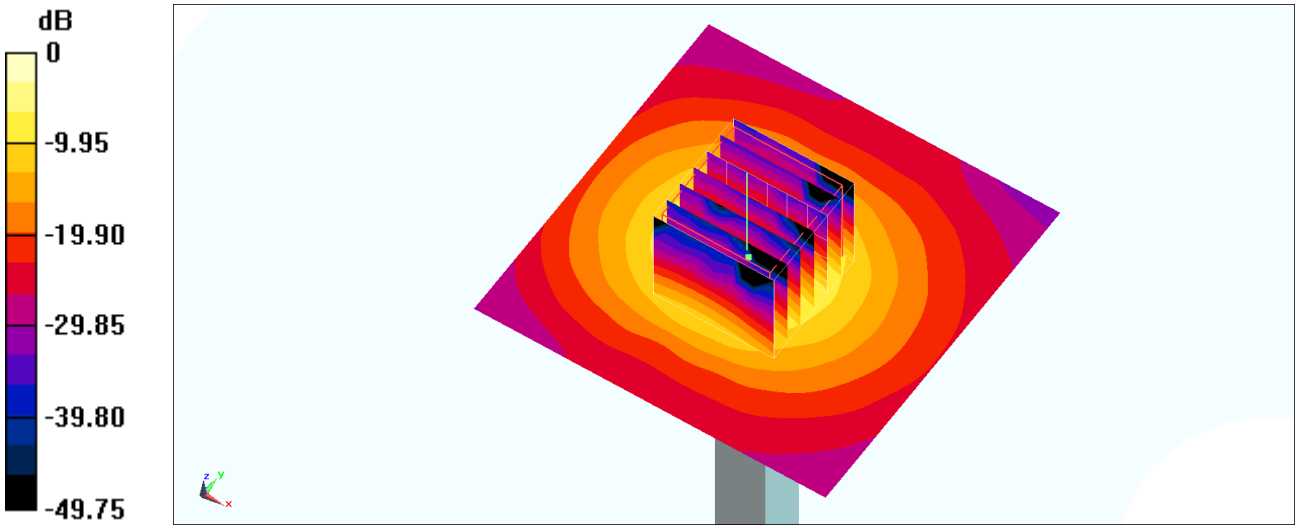

0 dB = 21.4 W/kg = 13.30 dBW/kg

System Check_Head_5750MHz

DUT: D5GHzV2-1006

Communication System: CW; Frequency: 5750 MHz;Duty Cycle: 1:1
Medium: HSL_5G_200711 Medium parameters used: f = 5750 MHz; σ = 5.114 S/m; ε_r = 36.921; ρ = 1000 kg/m^3
Ambient Temperature：23.5 ℃; Liquid Temperature：22.5 ℃

DASY5 Configuration:
- Probe: EX3DV4 - SN3728; ConvF(4.78, 4.78, 4.78) @ 5750 MHz; Calibrated: 2020/2/4
- Sensor-Surface: 1.4mm (Mechanical Surface Detection)
- Electronics: DAE4 Sn699; Calibrated: 2020/2/26
- Phantom: SAM_Left; Type: QD000P40CD; Serial: TP:1477
- Measurement SW: DASY52, Version 52.10 (4);SEMCAD X Version 14.6.14 (7483)

Pin=100mW/Area Scan (71x71x1): Interpolated grid: dx=1.000 mm, dy=1.000 mm
Maximum value of SAR (interpolated) = 21.0 W/kg

Pin=100mW/Zoom Scan (7x7x7)/Cube 0: Measurement grid: dx=4mm, dy=4mm, dz=1.4mm
Reference Value = 71.90 V/m; Power Drift = -0.19 dB
Peak SAR (extrapolated) = 35.7 W/kg
SAR(1 g) = 7.72 W/kg; SAR(10 g) = 2.18 W/kg
Maximum value of SAR (measured) = 20.4 W/kg

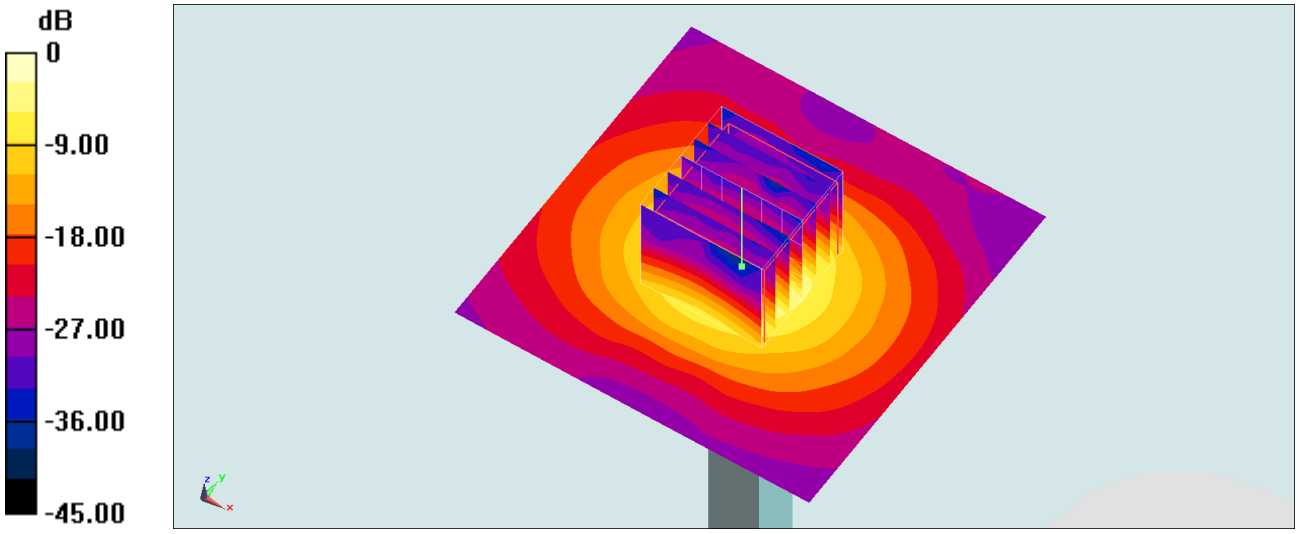

0 dB = 20.4 W/kg = 13.10 dBW/kg

System Check_Head_5750MHz

DUT: D5GHzV2-1006

Communication System: CW; Frequency: 5750 MHz;Duty Cycle: 1:1
Medium: HSL_5G_200715 Medium parameters used: f = 5750 MHz; σ = 5.285 S/m; ε_r = 36.197; ρ = 1000 kg/m^3
Ambient Temperature：23.3 ℃; Liquid Temperature：22.3 ℃

DASY5 Configuration:
- Probe: EX3DV4 - SN3728; ConvF(4.78, 4.78, 4.78) @ 5750 MHz; Calibrated: 2020/2/4
- Sensor-Surface: 1.4mm (Mechanical Surface Detection)
- Electronics: DAE4 Sn699; Calibrated: 2020/2/26
- Phantom: SAM_Left; Type: QD000P40CD; Serial: TP:1477
- Measurement SW: DASY52, Version 52.10 (4);SEMCAD X Version 14.6.14 (7483)

Pin=100mW/Area Scan (71x71x1): Interpolated grid: dx=1.000 mm, dy=1.000 mm
Maximum value of SAR (interpolated) = 18.7 W/kg

Pin=100mW/Zoom Scan (8x8x7)/Cube 0: Measurement grid: dx=4mm, dy=4mm, dz=1.4mm
Reference Value = 57.43 V/m; Power Drift = 0.04 dB
Peak SAR (extrapolated) = 32.9 W/kg
SAR(1 g) = 7.44 W/kg; SAR(10 g) = 2.12 W/kg
Maximum value of SAR (measured) = 19.0 W/kg

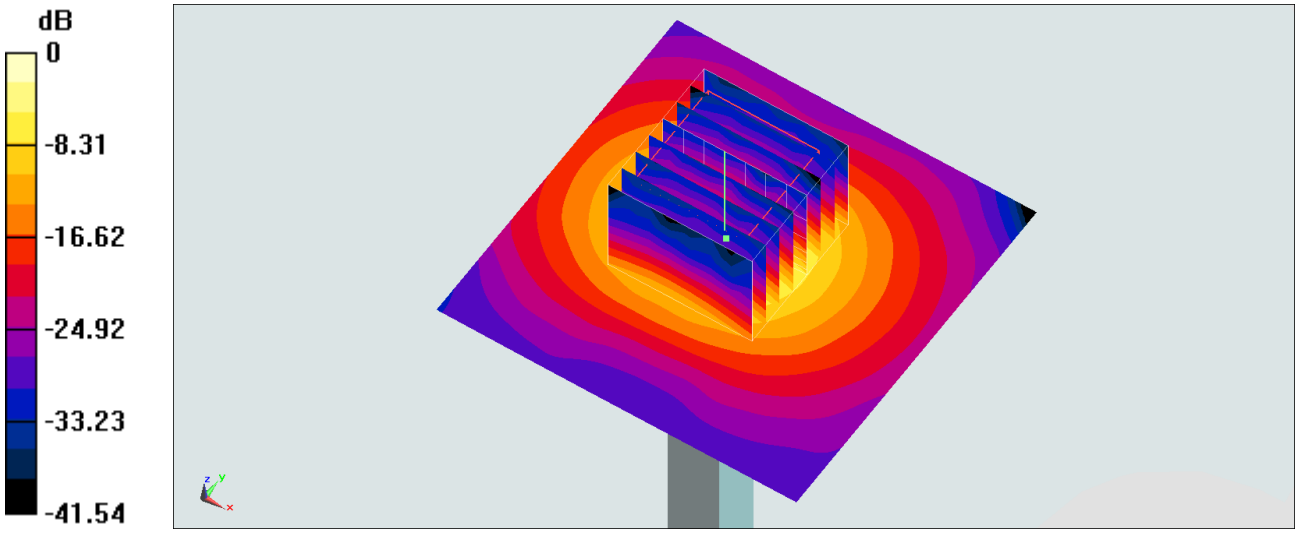

0 dB = 19.0 W/kg = 12.79 dBW/kg

System Check_Head_5750MHz

DUT: D5GHzV2-1006

Communication System: CW; Frequency: 5750 MHz;Duty Cycle: 1:1
Medium: HSL_5G_200717 Medium parameters used: f = 5750 MHz; σ = 5.177 S/m; ε_r = 36.661; ρ = 1000 kg/m^3
Ambient Temperature：23.6 ℃; Liquid Temperature：22.6 ℃

DASY5 Configuration:
- Probe: EX3DV4 - SN3728; ConvF(4.78, 4.78, 4.78) @ 5750 MHz; Calibrated: 2020/2/4
- Sensor-Surface: 1.4mm (Mechanical Surface Detection)
- Electronics: DAE4 Sn699; Calibrated: 2020/2/26
- Phantom: SAM_Left; Type: QD000P40CD; Serial: TP:1477
- Measurement SW: DASY52, Version 52.10 (4);SEMCAD X Version 14.6.14 (7483)

Pin=100mW/Area Scan (71x71x1): Interpolated grid: dx=1.000 mm, dy=1.000 mm
Maximum value of SAR (interpolated) = 18.8 W/kg

Pin=100mW/Zoom Scan (8x8x7)/Cube 0: Measurement grid: dx=4mm, dy=4mm, dz=1.4mm
Reference Value = 67.40 V/m; Power Drift = 0.05 dB
Peak SAR (extrapolated) = 31.1 W/kg
SAR(1 g) = 7.47 W/kg; SAR(10 g) = 2.15 W/kg
Maximum value of SAR (measured) = 19.3 W/kg

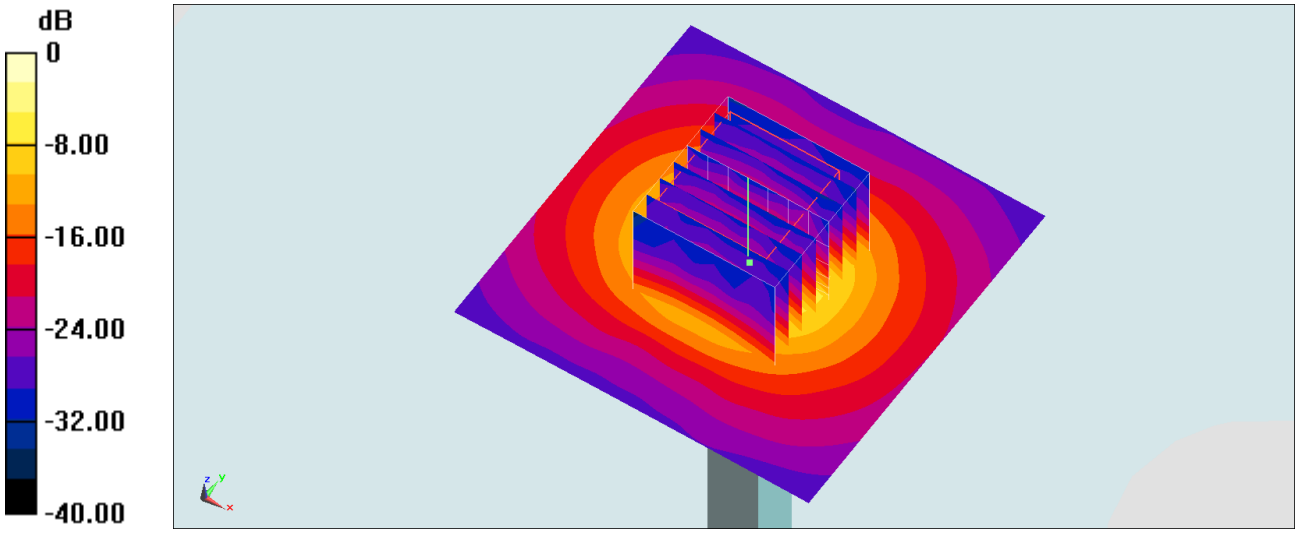

0 dB = 19.3 W/kg = 12.86 dBW/kg

System Check_Head_5750MHz

DUT: D5GHzV2-1006

Communication System: CW; Frequency: 5750 MHz;Duty Cycle: 1:1
Medium: HSL_5G_200729 Medium parameters used: f = 5750 MHz; σ = 5.146 S/m; ε_r = 35.936; ρ = 1000 kg/m^3
Ambient Temperature：23.5 ℃; Liquid Temperature：22.5 ℃

DASY5 Configuration:
- Probe: EX3DV4 - SN3642; ConvF(4.17, 4.17, 4.17) @ 5750 MHz; Calibrated: 2020/4/29
- Sensor-Surface: 1.4mm (Mechanical Surface Detection)
- Electronics: DAE4 Sn376; Calibrated: 2019/12/6
- Phantom: SAM_Right; Type: SAM; Serial: TP:1681
- Measurement SW: DASY52, Version 52.10 (4);SEMCAD X Version 14.6.14 (7483)

Pin=100mW/Area Scan (71x71x1): Interpolated grid: dx=1.000 mm, dy=1.000 mm
Maximum value of SAR (interpolated) = 20.0 W/kg

Pin=100mW/Zoom Scan (7x7x7)/Cube 0: Measurement grid: dx=4mm, dy=4mm, dz=1.4mm
Reference Value = 69.07 V/m; Power Drift = -0.05 dB
Peak SAR (extrapolated) = 34.7 W/kg
SAR(1 g) = 7.64 W/kg; SAR(10 g) = 2.11 W/kg
Maximum value of SAR (measured) = 19.1 W/kg

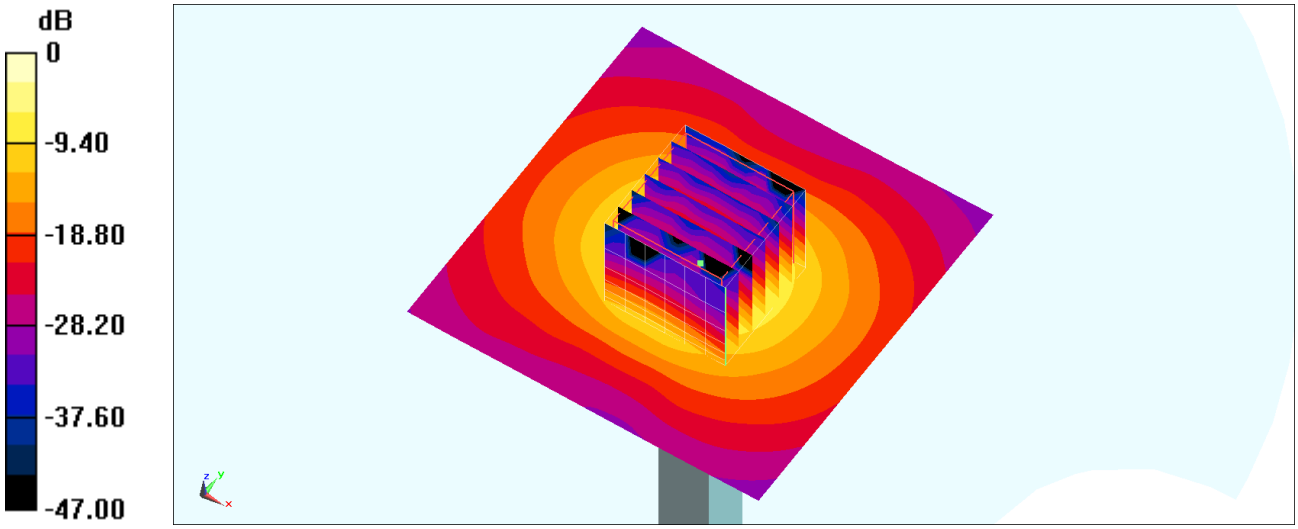

0 dB = 19.1 W/kg = 12.81 dBW/kg

System Check_Head_5750MHz

DUT: D5GHzV2-1006

Communication System: CW; Frequency: 5750 MHz;Duty Cycle: 1:1
Medium: HSL_5G_200731 Medium parameters used: f = 5750 MHz; σ = 5.273 S/m; ε_r = 35.929; ρ = 1000 kg/m^3
Ambient Temperature：23.5 ℃; Liquid Temperature：22.5 ℃

DASY5 Configuration:
- Probe: EX3DV4 - SN3642; ConvF(4.17, 4.17, 4.17) @ 5750 MHz; Calibrated: 2020/4/29
- Sensor-Surface: 1.4mm (Mechanical Surface Detection)
- Electronics: DAE4 Sn376; Calibrated: 2019/12/6
- Phantom: SAM_Right; Type: SAM; Serial: TP:1681
- Measurement SW: DASY52, Version 52.10 (4);SEMCAD X Version 14.6.14 (7483)

Pin=100mW/Area Scan (71x71x1): Interpolated grid: dx=1.000 mm, dy=1.000 mm
Maximum value of SAR (interpolated) = 20.5 W/kg

Pin=100mW/Zoom Scan (7x7x7)/Cube 0: Measurement grid: dx=4mm, dy=4mm, dz=1.4mm
Reference Value = 69.07 V/m; Power Drift = -0.14 dB
Peak SAR (extrapolated) = 35.6 W/kg
SAR(1 g) = 7.83 W/kg; SAR(10 g) = 2.16 W/kg
Maximum value of SAR (measured) = 19.6 W/kg

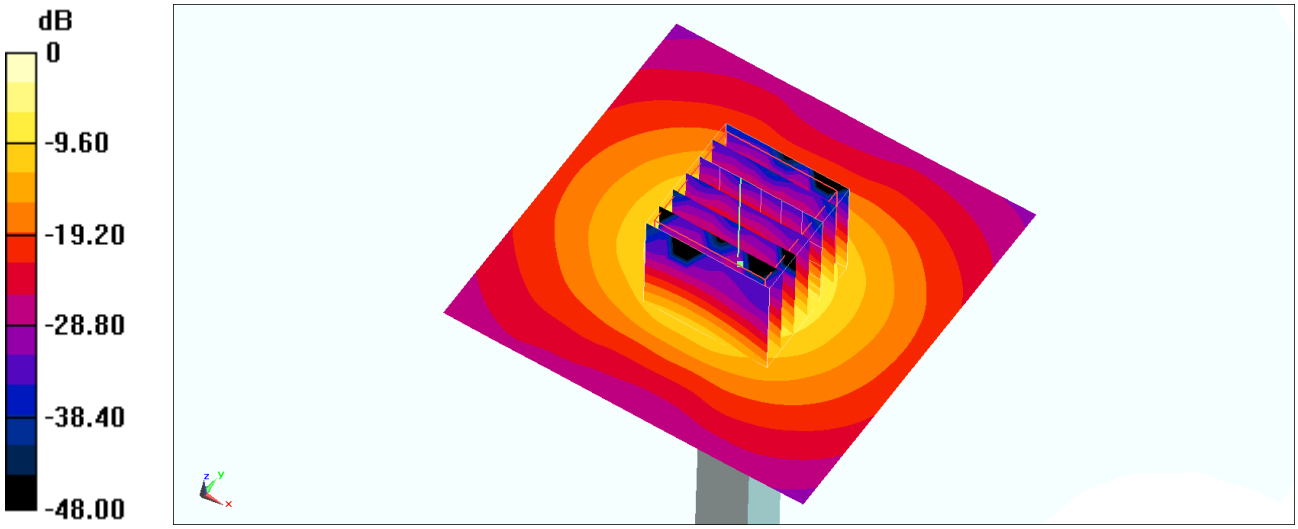

0 dB = 19.6 W/kg = 12.92 dBW/kg

System Check_Head_5750MHz

DUT: D5GHzV2-1006

Communication System: CW; Frequency: 5750 MHz;Duty Cycle: 1:1
Medium: HSL_5G_200801 Medium parameters used: f = 5750 MHz; σ = 5.236 S/m; ε_r = 35.931; ρ = 1000 kg/m^3
Ambient Temperature：23.4 ℃; Liquid Temperature：22.4 ℃

DASY5 Configuration:
- Probe: EX3DV4 - SN3642; ConvF(4.17, 4.17, 4.17) @ 5750 MHz; Calibrated: 2020/4/29
- Sensor-Surface: 1.4mm (Mechanical Surface Detection)
- Electronics: DAE4 Sn376; Calibrated: 2019/12/6
- Phantom: SAM_Right; Type: SAM; Serial: TP:1681
- Measurement SW: DASY52, Version 52.10 (4);SEMCAD X Version 14.6.14 (7483)

Pin=100mW/Area Scan (71x71x1): Interpolated grid: dx=1.000 mm, dy=1.000 mm
Maximum value of SAR (interpolated) = 20.4 W/kg

Pin=100mW/Zoom Scan (7x7x7)/Cube 0: Measurement grid: dx=4mm, dy=4mm, dz=1.4mm
Reference Value = 69.07 V/m; Power Drift = -0.08 dB
Peak SAR (extrapolated) = 35.3 W/kg
SAR(1 g) = 7.78 W/kg; SAR(10 g) = 2.14 W/kg
Maximum value of SAR (measured) = 19.4 W/kg

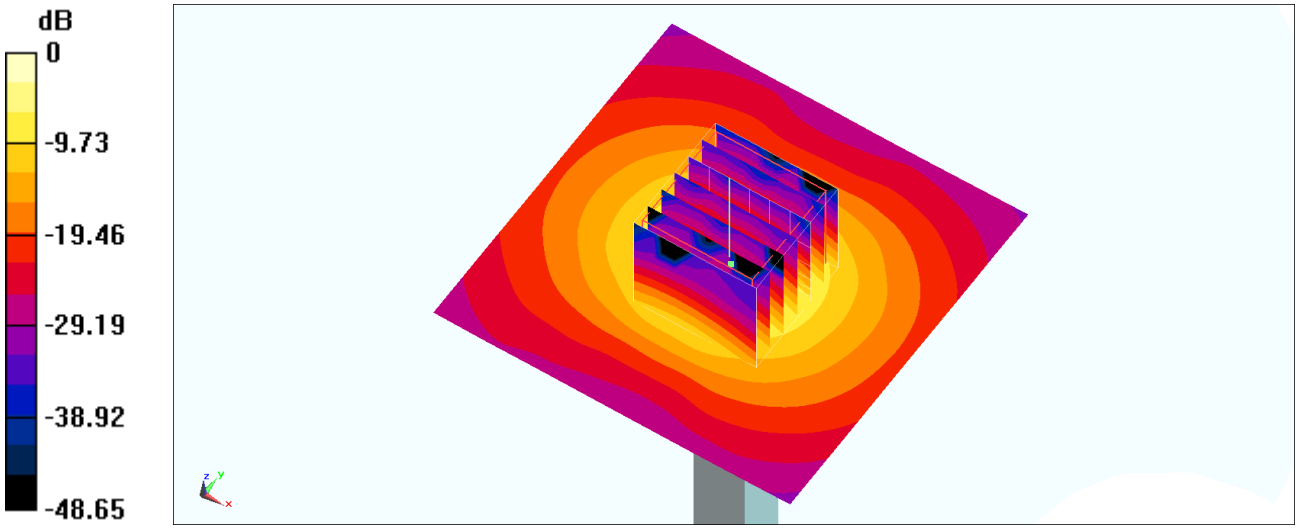

0 dB = 19.4 W/kg = 12.88 dBW/kg

System Check_Head_5750MHz

DUT: D5GHzV2-1006

Communication System: CW; Frequency: 5750 MHz;Duty Cycle: 1:1
Medium: HSL_5G_200804 Medium parameters used: f = 5750 MHz; σ = 5.349 S/m; ε_r = 36.268; ρ = 1000 kg/m^3
Ambient Temperature：23.5 ℃; Liquid Temperature：22.5 ℃

DASY5 Configuration:
- Probe: EX3DV4 - SN3642; ConvF(4.17, 4.17, 4.17) @ 5750 MHz; Calibrated: 2020/4/29
- Sensor-Surface: 1.4mm (Mechanical Surface Detection)
- Electronics: DAE4 Sn376; Calibrated: 2019/12/6
- Phantom: SAM_Right; Type: SAM; Serial: TP:1681
- Measurement SW: DASY52, Version 52.10 (4);SEMCAD X Version 14.6.14 (7483)

Pin=100mW/Area Scan (71x71x1): Interpolated grid: dx=1.000 mm, dy=1.000 mm
Maximum value of SAR (interpolated) = 20.9 W/kg

Pin=100mW/Zoom Scan (7x7x7)/Cube 0: Measurement grid: dx=4mm, dy=4mm, dz=1.4mm
Reference Value = 70.47 V/m; Power Drift = 0.13 dB
Peak SAR (extrapolated) = 37.6 W/kg
SAR(1 g) = 8.42 W/kg; SAR(10 g) = 2.3 W/kg
Maximum value of SAR (measured) = 21.7 W/kg

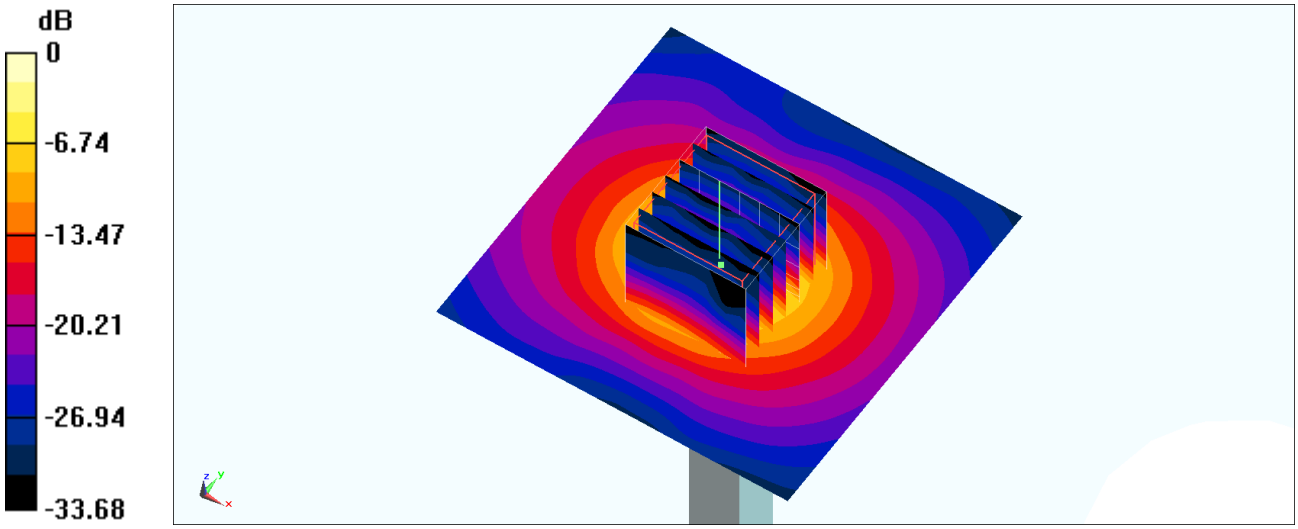

0 dB = 21.7 W/kg = 13.36 dBW/kg