#39_GSM850 Ant 0_GPRS (4 Tx slots)_Right Side_10mm_Ch189

Communication System: GSM850; Frequency: 836.4 MHz;Duty Cycle: 1:2.08
Medium: HSL_835_230125 Medium parameters used : f = 836.4 MHz; σ = 0.922 S/m; ε_r = 42.684; ρ = 1000 kg/m^3
Ambient Temperature：23.7 ℃; Liquid Temperature：22.7 ℃

DASY5 Configuration
- Probe: EX3DV4 - SN3925; ConvF(10.28, 10.28, 10.28) @ 836.4 MHz; Calibrated: 2022/4/29
- Sensor-Surface: 1.4mm (Mechanical Surface Detection)
- Electronics: DAE4 Sn778; Calibrated: 2022/5/30
- Phantom: SAM_Left; Type: QD000P40CD; Serial: 1719
- Measurement SW: DASY52, Version 52.10 (4); SEMCAD X Version 14.6.14 (7483)

Area Scan (41x121x1): Interpolated grid: dx=1.500 mm, dy=1.500 mm
Maximum value of SAR (interpolated) = 0.977 W/kg

Zoom Scan (5x5x7)/Cube 0: Measurement grid: dx=8mm, dy=8mm, dz=5mm
Reference Value = 31.99 V/m; Power Drift = -0.15 dB
Peak SAR (extrapolated) = 1.06 W/kg
SAR(1 g) = 0.685 W/kg; SAR(10 g) = 0.446 W/kg
Smallest distance from peaks to all points 3 dB below = 13.7 mm
Ratio of SAR at M2 to SAR at M1 = 64.2%
Maximum value of SAR (measured) = 0.918 W/kg

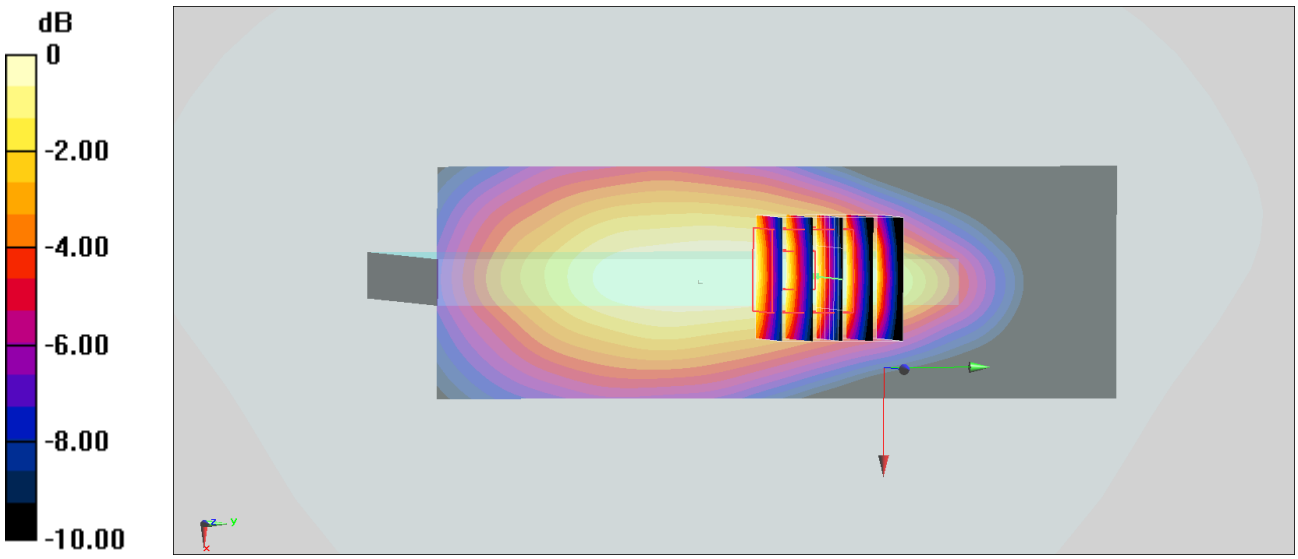

0 dB = 0.918 W/kg = -0.37 dBW/kg

#40_GSM1900 Ant 2_GPRS (4 Tx slots)_Bottom Side_10mm_Ch810

Communication System: PCS; Frequency: 1909.8 MHz;Duty Cycle: 1:2.08
Medium: HSL_1900_230126 Medium parameters used: f = 1910 MHz; σ = 1.43 S/m; ε_r = 39.693; ρ = 1000 kg/m^3
Ambient Temperature：23.8 ℃; Liquid Temperature：22.8 ℃

DASY5 Configuration
- Probe: EX3DV4 - SN3925; ConvF(8.7, 8.7, 8.7) @ 1909.8 MHz; Calibrated: 2022/4/29
- Sensor-Surface: 1.4mm (Mechanical Surface Detection)
- Electronics: DAE4 Sn778; Calibrated: 2022/5/30
- Phantom: SAM_Left; Type: QD000P40CD; Serial: 1719
- Measurement SW: DASY52, Version 52.10 (4); SEMCAD X Version 14.6.14 (7483)

Area Scan (41x81x1): Interpolated grid: dx=1.500 mm, dy=1.500 mm
Maximum value of SAR (interpolated) = 1.39 W/kg

Zoom Scan (5x5x7)/Cube 0: Measurement grid: dx=8mm, dy=8mm, dz=5mm
Reference Value = 31.33 V/m; Power Drift = -0.19 dB
Peak SAR (extrapolated) = 1.51 W/kg
SAR(1 g) = 0.899 W/kg; SAR(10 g) = 0.474 W/kg
Smallest distance from peaks to all points 3 dB below = 10.1 mm
Ratio of SAR at M2 to SAR at M1 = 61.2%
Maximum value of SAR (measured) = 1.31 W/kg

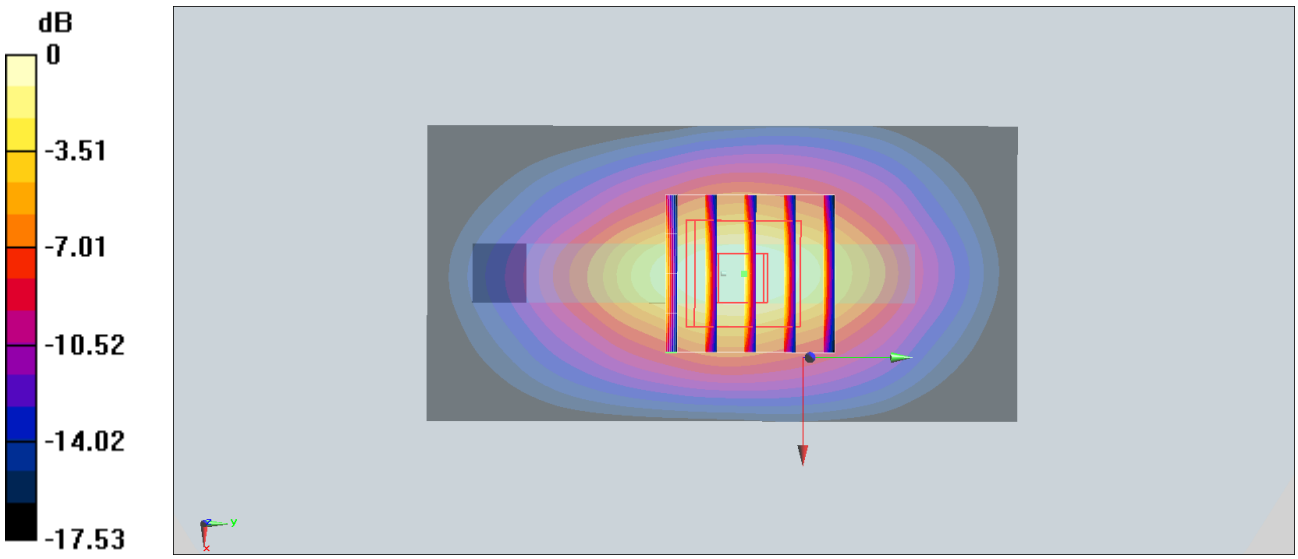

0 dB = 1.31 W/kg = 1.17 dBW/kg

#41_WCDMA II Ant 2_RMC 12.2Kbps_Bottom Side_10mm_Ch9262

Communication System: WCDMA; Frequency: 1852.4 MHz;Duty Cycle: 1:1
Medium: HSL_1900_230117 Medium parameters used : f = 1852.4 MHz; σ = 1.377 S/m; ε_r = 40.063; ρ = 1000 kg/m^3
Ambient Temperature：23.5 ℃; Liquid Temperature：22.5 ℃

DASY5 Configuration
- Probe: EX3DV4 - SN3925; ConvF(8.7, 8.7, 8.7) @ 1852.4 MHz; Calibrated: 2022/4/29
- Sensor-Surface: 1.4mm (Mechanical Surface Detection)
- Electronics: DAE4 Sn778; Calibrated: 2022/5/30
- Phantom: SAM_Left; Type: QD000P40CD; Serial: 1719
- Measurement SW: DASY52, Version 52.10 (4); SEMCAD X Version 14.6.14 (7483)

Area Scan (41x71x1): Interpolated grid: dx=1.500 mm, dy=1.500 mm
Maximum value of SAR (interpolated) = 1.25 W/kg

Zoom Scan (5x5x7)/Cube 0: Measurement grid: dx=8mm, dy=8mm, dz=5mm
Reference Value = 27.86 V/m; Power Drift = 0.01 dB
Peak SAR (extrapolated) = 1.35 W/kg
SAR(1 g) = 0.786 W/kg; SAR(10 g) = 0.416 W/kg
Smallest distance from peaks to all points 3 dB below = 9.6 mm
Ratio of SAR at M2 to SAR at M1 = 59.1%
Maximum value of SAR (measured) = 1.17 W/kg

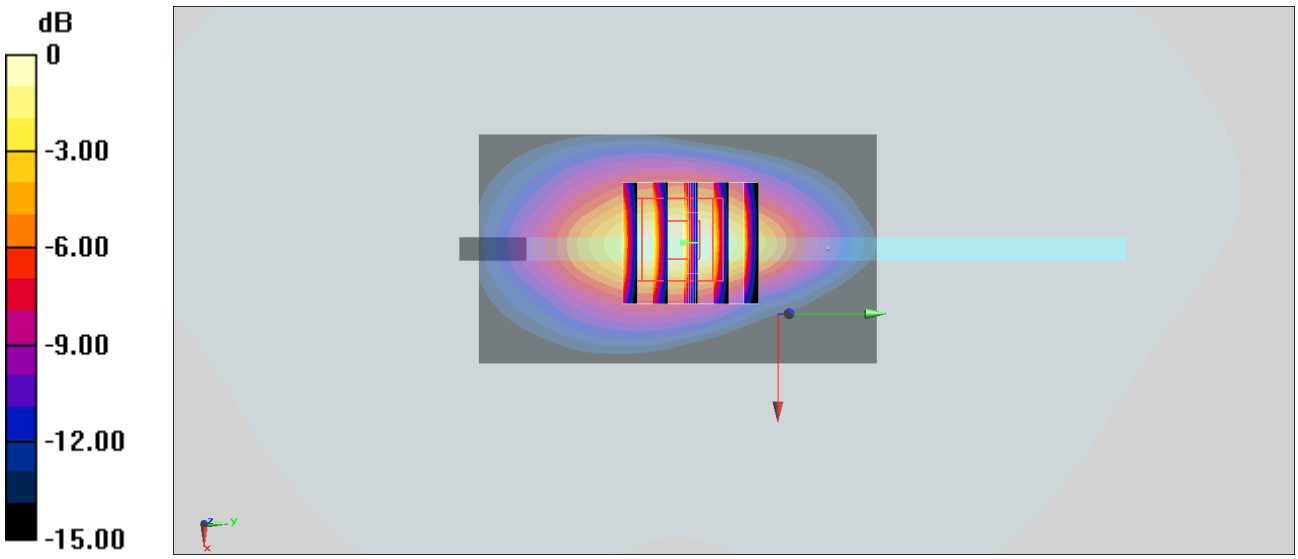

0 dB = 1.17 W/kg = 0.68 dBW/kg

#42_WCDMA IV Ant 2_RMC 12.2Kbps_Bottom Side_10mm_Ch1513

Communication System: WCDMA; Frequency: 1752.6 MHz;Duty Cycle: 1:1
Medium: HSL_1750_230118 Medium parameters used: f = 1753 MHz; σ = 1.358 S/m; ε_r = 40.007; ρ = 1000 kg/m^3
Ambient Temperature：23.6 ℃; Liquid Temperature：22.6 ℃

DASY5 Configuration
- Probe: EX3DV4 - SN3925; ConvF(8.94, 8.94, 8.94) @ 1752.6 MHz; Calibrated: 2022/4/29
- Sensor-Surface: 1.4mm (Mechanical Surface Detection)
- Electronics: DAE4 Sn778; Calibrated: 2022/5/30
- Phantom: SAM_Left; Type: QD000P40CD; Serial: 1719
- Measurement SW: DASY52, Version 52.10 (4); SEMCAD X Version 14.6.14 (7483)

Area Scan (41x71x1): Interpolated grid: dx=1.500 mm, dy=1.500 mm
Maximum value of SAR (interpolated) = 1.39 W/kg

Zoom Scan (5x5x7)/Cube 0: Measurement grid: dx=8mm, dy=8mm, dz=5mm
Reference Value = 28.74 V/m; Power Drift = 0.11 dB
Peak SAR (extrapolated) = 1.50 W/kg
SAR(1 g) = 0.898 W/kg; SAR(10 g) = 0.489 W/kg
Smallest distance from peaks to all points 3 dB below = 9.7 mm
Ratio of SAR at M2 to SAR at M1 = 61.2%
Maximum value of SAR (measured) = 1.30 W/kg

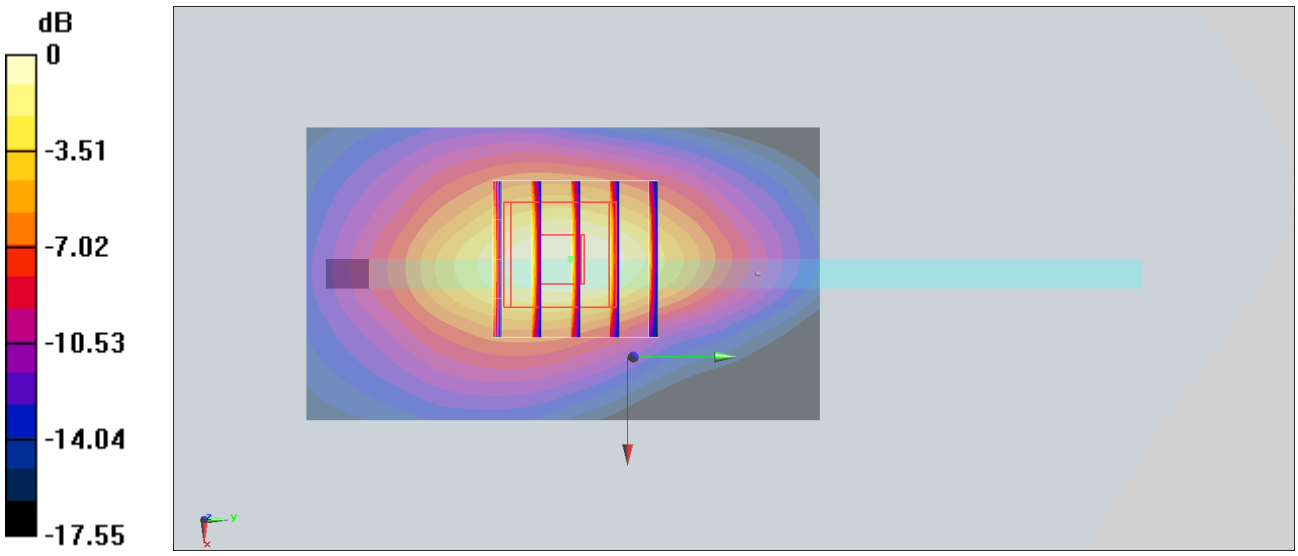

0 dB = 1.30 W/kg = 1.14 dBW/kg

Test Laboratory: Sporton International Inc. SAR/HAC Testing Lab Date: 2022/12/9

#43_WCDMA V Ant 0_RMC 12.2Kbps_Front_10mm_Ch4132

Communication System: WCDMA; Frequency: 826.4 MHz;Duty Cycle: 1:1
Medium: HSL_850_221209 Medium parameters used : f = 826.4 MHz; σ = 0.918 S/m; ε_r = 42.69; ρ = 1000 kg/m^3
Ambient Temperature：23.5 ℃; Liquid Temperature：22.5 ℃

DASY5 Configuration:
- Probe: EX3DV4 - SN3925; ConvF(10.28, 10.28, 10.28) @ 826.4 MHz; Calibrated: 2022/4/29
- Sensor-Surface: 1.4mm (Mechanical Surface Detection)
- Electronics: DAE4 Sn778; Calibrated: 2022/5/30
- Phantom: SAM_Left; Type: QD000P40CD; Serial: 1719
- Measurement SW: DASY52, Version 52.10 (4);SEMCAD X Version 14.6.14 (7483)

Area Scan (71x71x1): Interpolated grid: dx=1.500 mm, dy=1.500 mm
Maximum value of SAR (interpolated) = 0.617 W/kg

Zoom Scan (5x5x7)/Cube 0: Measurement grid: dx=8mm, dy=8mm, dz=5mm
Reference Value = 23.69 V/m; Power Drift = -0.14 dB
Peak SAR (extrapolated) = 0.670 W/kg
SAR(1 g) = 0.447 W/kg; SAR(10 g) = 0.291 W/kg
Smallest distance from peaks to all points 3 dB below = 18.2 mm
Ratio of SAR at M2 to SAR at M1 = 66.9%
Maximum value of SAR (measured) = 0.589 W/kg

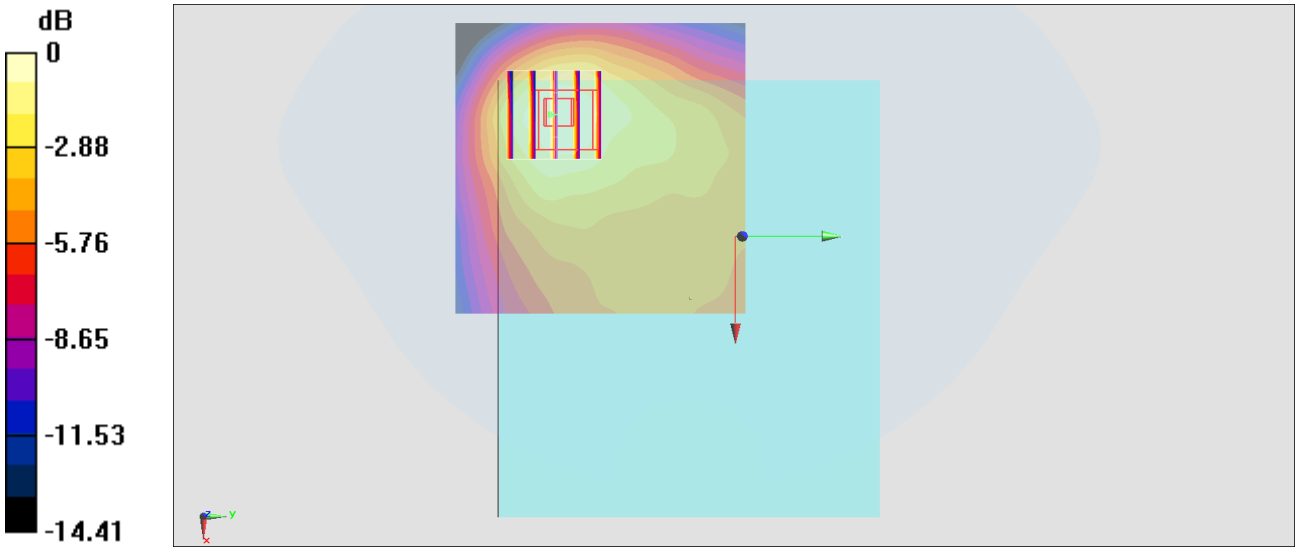

0 dB = 0.589 W/kg = -2.30 dBW/kg

#44_LTE Band 2 Ant 1_20M_QPSK_1_0_Right Side_10mm_Ch19100

Communication System: LTE; Frequency: 1900 MHz;Duty Cycle: 1:1
Medium: HSL_1900_230109 Medium parameters used: f = 1900 MHz; σ = 1.4 S/m; ε_r = 39.741; ρ = 1000 kg/m^3
Ambient Temperature：23.4℃; Liquid Temperature：22.4 ℃

DASY5 Configuration
- Probe: EX3DV4 - SN3925; ConvF(8.7, 8.7, 8.7) @ 1900 MHz; Calibrated: 2022/4/29
- Sensor-Surface: 1.4mm (Mechanical Surface Detection)
- Electronics: DAE4 Sn778; Calibrated: 2022/5/30
- Phantom: SAM_Left; Type: QD000P40CD; Serial: 1719
- Measurement SW: DASY52, Version 52.10 (4); SEMCAD X Version 14.6.14 (7483)

Area Scan (41x71x1): Interpolated grid: dx=1.500 mm, dy=1.500 mm
Maximum value of SAR (interpolated) = 1.51 W/kg

Zoom Scan (5x5x7)/Cube 0: Measurement grid: dx=8mm, dy=8mm, dz=5mm
Reference Value = 32.99 V/m; Power Drift = 0.01 dB
Peak SAR (extrapolated) = 1.78 W/kg
SAR(1 g) = 0.967 W/kg; SAR(10 g) = 0.454 W/kg
Smallest distance from peaks to all points 3 dB below = 8 mm
Ratio of SAR at M2 to SAR at M1 = 58.6%
Maximum value of SAR (measured) = 1.43 W/kg

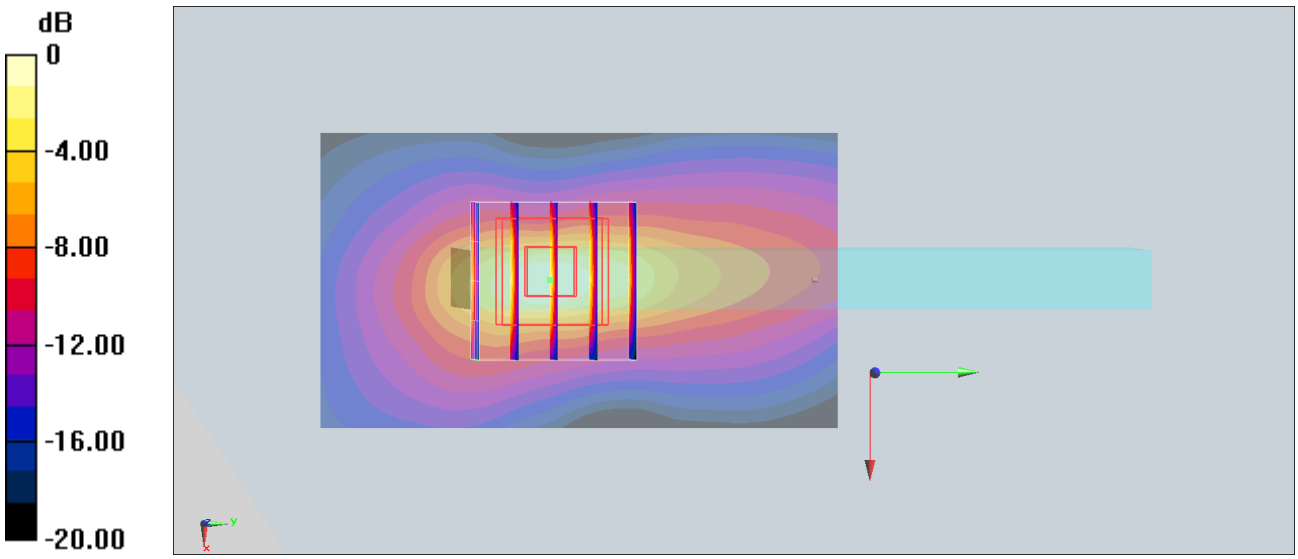

0 dB = 1.43 W/kg = 1.55 dBW/kg

#45_LTE Band 7 Ant 2_20M_QPSK_1_0_Bottom Side_10mm_Ch21100

Communication System: LTE; Frequency: 2535 MHz;Duty Cycle: 1:1
Medium: HSL_2600_230119 Medium parameters used : f = 2535 MHz; σ = 1.915 S/m; ε_r = 38.425; ρ = 1000 kg/m^3
Ambient Temperature：23.7 ℃; Liquid Temperature：22.7 ℃

DASY5 Configuration
- Probe: EX3DV4 - SN3925; ConvF(7.96, 7.96, 7.96) @ 2535 MHz; Calibrated: 2022/4/29
- Sensor-Surface: 1.4mm (Mechanical Surface Detection)
- Electronics: DAE4 Sn778; Calibrated: 2022/5/30
- Phantom: SAM_Left; Type: QD000P40CD; Serial: 1719
- Measurement SW: DASY52, Version 52.10 (4); SEMCAD X Version 14.6.14 (7483)

Area Scan (51x91x1): Interpolated grid: dx=1.200 mm, dy=1.200 mm
Maximum value of SAR (interpolated) = 1.63 W/kg

Zoom Scan (7x7x7)/Cube 0: Measurement grid: dx=5mm, dy=5mm, dz=5mm
Reference Value = 27.90 V/m; Power Drift = -0.04 dB
Peak SAR (extrapolated) = 1.90 W/kg
SAR(1 g) = 0.887 W/kg; SAR(10 g) = 0.435 W/kg
Smallest distance from peaks to all points 3 dB below = 9.8 mm
Ratio of SAR at M2 to SAR at M1 = 53.4%
Maximum value of SAR (measured) = 1.57 W/kg

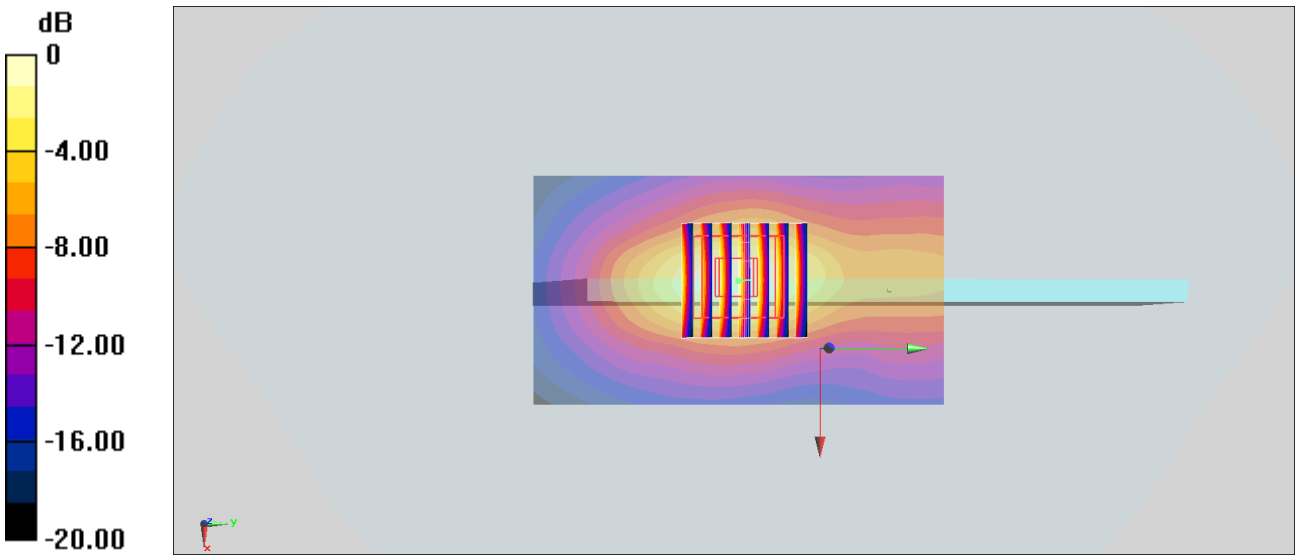

0 dB = 1.57 W/kg = 1.96 dBW/kg

Test Laboratory: Sporton International Inc. SAR/HAC Testing Lab Date: 2022/12/8

#46_LTE Band 12 Ant 0_10M_QPSK_1_0_Front_10mm_Ch23095

Communication System: LTE; Frequency: 707.5 MHz;Duty Cycle: 1:1
Medium: HSL_750_221208 Medium parameters used : f = 707.5 MHz; σ = 0.878 S/m; ε_r = 43.211; ρ = 1000 kg/m^3
Ambient Temperature：23.5 ℃; Liquid Temperature：22.5 ℃

DASY5 Configuration:
- Probe: EX3DV4 - SN3925; ConvF(10.46, 10.46, 10.46) @ 707.5 MHz; Calibrated: 2022/4/29
- Sensor-Surface: 1.4mm (Mechanical Surface Detection)
- Electronics: DAE4 Sn778; Calibrated: 2022/5/30
- Phantom: SAM_Left; Type: QD000P40CD; Serial: 1719
- Measurement SW: DASY52, Version 52.10 (4);SEMCAD X Version 14.6.14 (7483)

Area Scan (71x71x1): Interpolated grid: dx=1.500 mm, dy=1.500 mm
Maximum value of SAR (interpolated) = 0.688 W/kg

Zoom Scan (5x5x7)/Cube 0: Measurement grid: dx=8mm, dy=8mm, dz=5mm
Reference Value = 26.43 V/m; Power Drift = -0.10 dB
Peak SAR (extrapolated) = 0.775 W/kg
SAR(1 g) = 0.512 W/kg; SAR(10 g) = 0.342 W/kg
Smallest distance from peaks to all points 3 dB below = 20.9 mm
Ratio of SAR at M2 to SAR at M1 = 63.2%
Maximum value of SAR (measured) = 0.662 W/kg

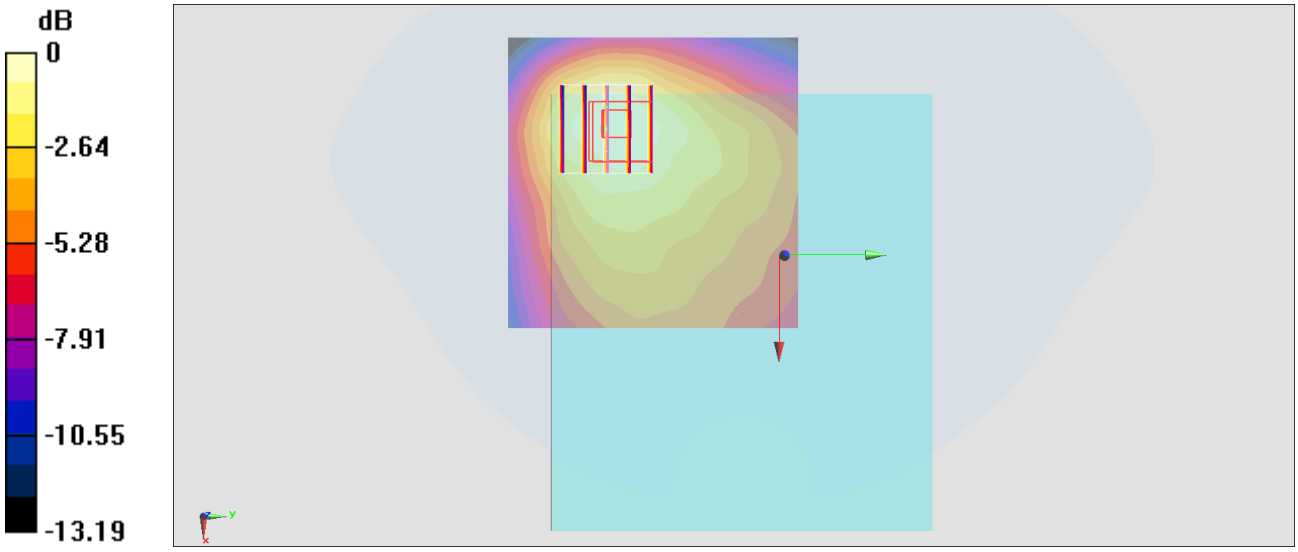

0 dB = 0.662 W/kg = -1.79 dBW/kg

Test Laboratory: Sporton International Inc. SAR/HAC Testing Lab Date: 2022/12/8

#47_LTE Band 13 Ant 0_10M_QPSK_1_0_Front_10mm_Ch23230

Communication System: LTE; Frequency: 782 MHz;Duty Cycle: 1:1
Medium: HSL_750_221208 Medium parameters used: f = 782 MHz; σ = 0.901 S/m; ε_r = 42.915; ρ = 1000 kg/m^3
Ambient Temperature：23.5 ℃; Liquid Temperature：22.5 ℃

DASY5 Configuration:
- Probe: EX3DV4 - SN3925; ConvF(10.46, 10.46, 10.46) @ 782 MHz; Calibrated: 2022/4/29
- Sensor-Surface: 1.4mm (Mechanical Surface Detection)
- Electronics: DAE4 Sn778; Calibrated: 2022/5/30
- Phantom: SAM_Left; Type: QD000P40CD; Serial: 1719
- Measurement SW: DASY52, Version 52.10 (4);SEMCAD X Version 14.6.14 (7483)

Area Scan (71x71x1): Interpolated grid: dx=1.500 mm, dy=1.500 mm
Maximum value of SAR (interpolated) = 0.663 W/kg

Zoom Scan (5x5x7)/Cube 0: Measurement grid: dx=8mm, dy=8mm, dz=5mm
Reference Value = 25.33 V/m; Power Drift = -0.17 dB
Peak SAR (extrapolated) = 0.677 W/kg
SAR(1 g) = 0.473 W/kg; SAR(10 g) = 0.324 W/kg
Smallest distance from peaks to all points 3 dB below = 20.4 mm
Ratio of SAR at M2 to SAR at M1 = 69.6%
Maximum value of SAR (measured) = 0.603 W/kg

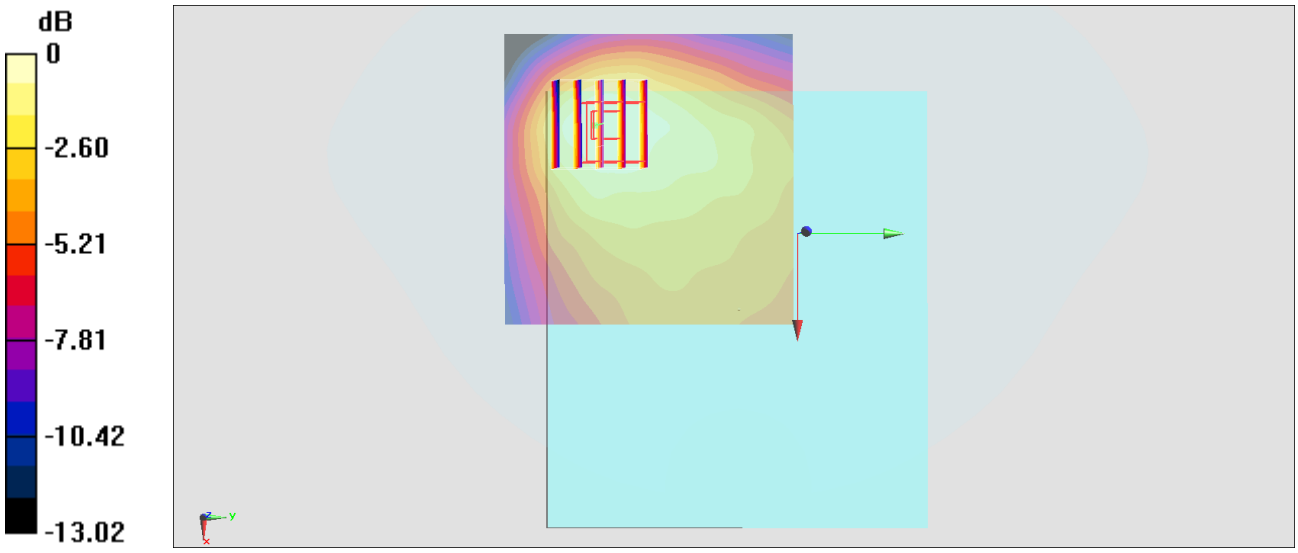

0 dB = 0.603 W/kg = -2.20 dBW/kg

Test Laboratory: Sporton International Inc. SAR/HAC Testing Lab Date: 2022/12/8

#48_LTE Band 14 Ant 0_10M_QPSK_1_0_Front_10mm_Ch23330

Communication System: LTE; Frequency: 793 MHz;Duty Cycle: 1:1
Medium: HSL_750_221208 Medium parameters used: f = 793 MHz; σ = 0.905 S/m; ε_r = 42.527; ρ = 1000 kg/m^3
Ambient Temperature：23.5 ℃; Liquid Temperature：22.5 ℃

DASY5 Configuration:
- Probe: EX3DV4 - SN3925; ConvF(10.46, 10.46, 10.46) @ 793 MHz; Calibrated: 2022/4/29
- Sensor-Surface: 1.4mm (Mechanical Surface Detection)
- Electronics: DAE4 Sn778; Calibrated: 2022/5/30
- Phantom: SAM_Left; Type: QD000P40CD; Serial: 1719
- Measurement SW: DASY52, Version 52.10 (4);SEMCAD X Version 14.6.14 (7483)

Area Scan (71x71x1): Interpolated grid: dx=1.500 mm, dy=1.500 mm
Maximum value of SAR (interpolated) = 0.708 W/kg

Zoom Scan (5x5x7)/Cube 0: Measurement grid: dx=8mm, dy=8mm, dz=5mm
Reference Value = 25.71 V/m; Power Drift = -0.00 dB
Peak SAR (extrapolated) = 0.736 W/kg
SAR(1 g) = 0.511 W/kg; SAR(10 g) = 0.348 W/kg
Smallest distance from peaks to all points 3 dB below = 17 mm
Ratio of SAR at M2 to SAR at M1 = 69.9%
Maximum value of SAR (measured) = 0.657 W/kg

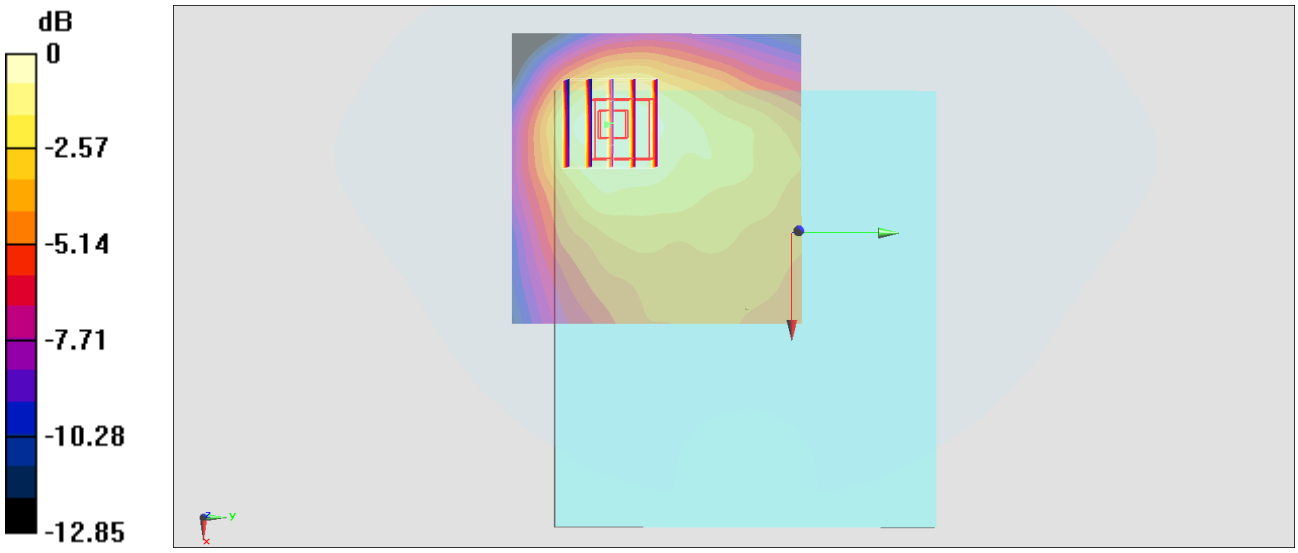

0 dB = 0.657 W/kg = -1.82 dBW/kg

#49_LTE Band 25 Ant 2_20M_QPSK_1_0_Bottom Side_10mm_Ch26590

Communication System: LTE; Frequency: 1905 MHz;Duty Cycle: 1:1
Medium: HSL_1900_230107 Medium parameters used : f = 1905 MHz; σ = 1.429 S/m; ε_r = 39.845; ρ = 1000 kg/m^3
Ambient Temperature：23.7 ℃; Liquid Temperature：22.7 ℃

DASY5 Configuration
- Probe: EX3DV4 - SN3925; ConvF(8.7, 8.7, 8.7) @ 1905 MHz; Calibrated: 2022/4/29
- Sensor-Surface: 1.4mm (Mechanical Surface Detection)
- Electronics: DAE4 Sn778; Calibrated: 2022/5/30
- Phantom: SAM_Left; Type: QD000P40CD; Serial: 1719
- Measurement SW: DASY52, Version 52.10 (4); SEMCAD X Version 14.6.14 (7483)

Area Scan (51x81x1): Interpolated grid: dx=1.500 mm, dy=1.500 mm
Maximum value of SAR (interpolated) = 1.41 W/kg

Zoom Scan (5x5x7)/Cube 0: Measurement grid: dx=8mm, dy=8mm, dz=5mm
Reference Value = 25.14 V/m; Power Drift = -0.07 dB
Peak SAR (extrapolated) = 1.46 W/kg
SAR(1 g) = 0.862 W/kg; SAR(10 g) = 0.458 W/kg
Smallest distance from peaks to all points 3 dB below = 9.6 mm
Ratio of SAR at M2 to SAR at M1 = 61.3%
Maximum value of SAR (measured) = 1.25 W/kg

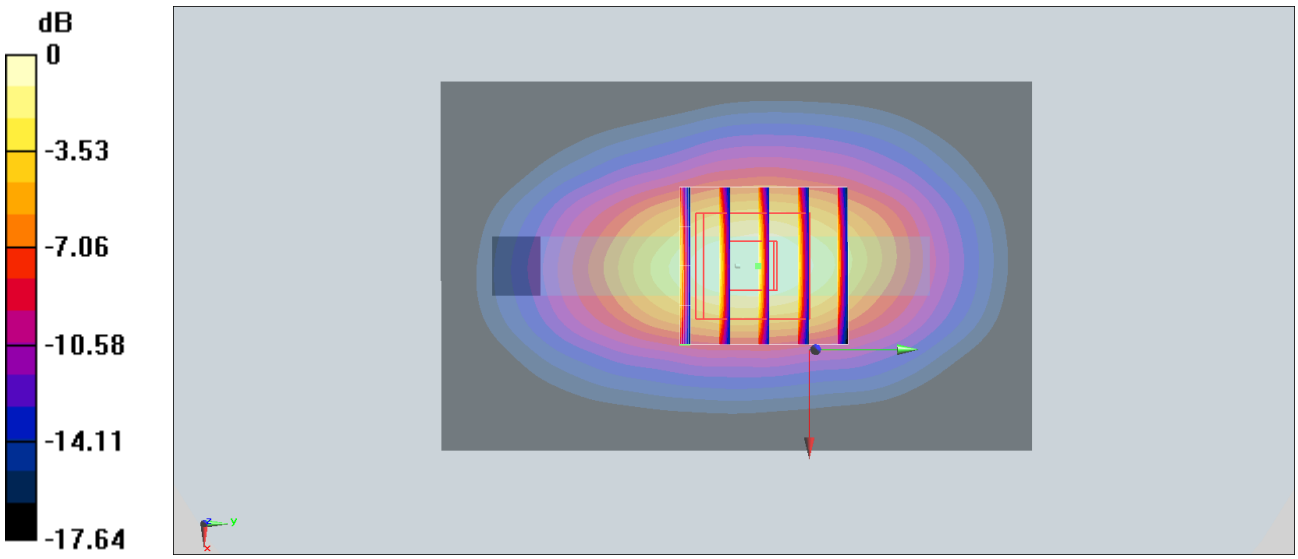

0 dB = 1.25 W/kg = 0.97 dBW/kg

Test Laboratory: Sporton International Inc. SAR/HAC Testing Lab Date: 2022/12/9

#50_LTE Band 26 Ant 0_15M_QPSK_1_0_Front_10mm_Ch26865

Communication System: LTE; Frequency: 831.5 MHz;Duty Cycle: 1:1
Medium: HSL_850_221209 Medium parameters used : f = 831.5 MHz; σ = 0.923 S/m; ε_r = 42.581; ρ = 1000 kg/m^3
Ambient Temperature：23.5 ℃; Liquid Temperature：22.5 ℃

DASY5 Configuration:
- Probe: EX3DV4 - SN3925; ConvF(10.28, 10.28, 10.28) @ 831.5 MHz; Calibrated: 2022/4/29
- Sensor-Surface: 1.4mm (Mechanical Surface Detection)
- Electronics: DAE4 Sn778; Calibrated: 2022/5/30
- Phantom: SAM_Left; Type: QD000P40CD; Serial: 1719
- Measurement SW: DASY52, Version 52.10 (4);SEMCAD X Version 14.6.14 (7483)

Area Scan (71x71x1): Interpolated grid: dx=1.500 mm, dy=1.500 mm
Maximum value of SAR (interpolated) = 0.765 W/kg

Zoom Scan (5x5x7)/Cube 0: Measurement grid: dx=8mm, dy=8mm, dz=5mm
Reference Value = 25.70 V/m; Power Drift = 0.01 dB
Peak SAR (extrapolated) = 0.820 W/kg
SAR(1 g) = 0.546 W/kg; SAR(10 g) = 0.359 W/kg
Smallest distance from peaks to all points 3 dB below = 17.9 mm
Ratio of SAR at M2 to SAR at M1 = 66.6%
Maximum value of SAR (measured) = 0.730 W/kg

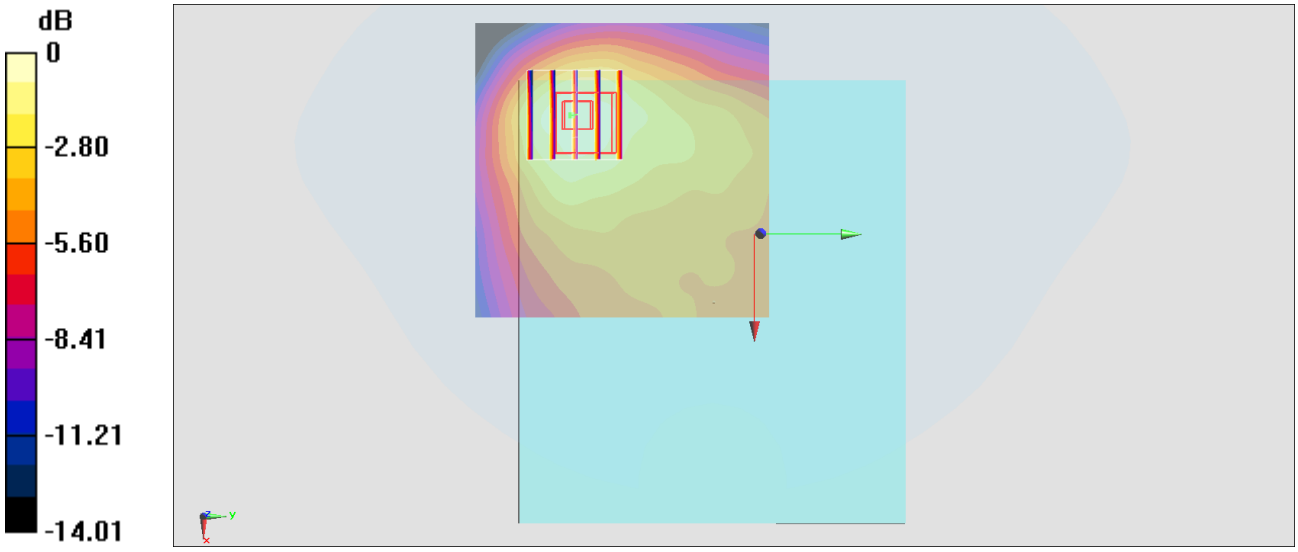

0 dB = 0.730 W/kg = -1.37 dBW/kg

#51_LTE Band 30 Ant 2_10M_QPSK_1_0_Bottom Side_10mm_Ch27710

Communication System: LTE; Frequency: 2310 MHz;Duty Cycle: 1:1
Medium: HSL_2300_230119 Medium parameters used: f = 2310 MHz; σ = 1.644 S/m; ε_r = 39.557; ρ = 1000 kg/m^3
Ambient Temperature：23.7 ℃; Liquid Temperature：22.7 ℃

DASY5 Configuration
- Probe: EX3DV4 - SN3925; ConvF(8.49, 8.49, 8.49) @ 2310 MHz; Calibrated: 2022/4/29
- Sensor-Surface: 1.4mm (Mechanical Surface Detection)
- Electronics: DAE4 Sn778; Calibrated: 2022/5/30
- Phantom: SAM_Left; Type: QD000P40CD; Serial: 1719
- Measurement SW: DASY52, Version 52.10 (4); SEMCAD X Version 14.6.14 (7483)

Area Scan (51x91x1): Interpolated grid: dx=1.200 mm, dy=1.200 mm
Maximum value of SAR (interpolated) = 1.56 W/kg

Zoom Scan (7x7x7)/Cube 0: Measurement grid: dx=5mm, dy=5mm, dz=5mm
Reference Value = 30.27 V/m; Power Drift = -0.08 dB
Peak SAR (extrapolated) = 1.80 W/kg
SAR(1 g) = 0.976 W/kg; SAR(10 g) = 0.483 W/kg
Smallest distance from peaks to all points 3 dB below = 9 mm
Ratio of SAR at M2 to SAR at M1 = 55.9%
Maximum value of SAR (measured) = 1.51 W/kg

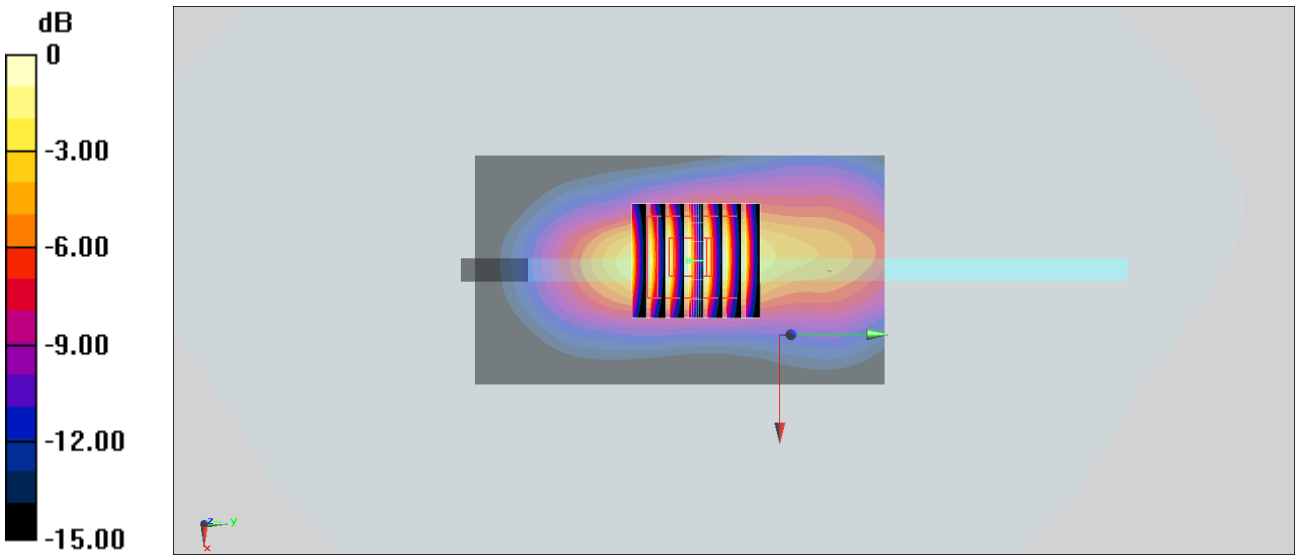

0 dB = 1.51 W/kg = 1.79 dBW/kg

#52_LTE Band 66 Ant 0_20M_QPSK_1_0_Back_10mm_Ch132572

Communication System: LTE; Frequency: 1770 MHz;Duty Cycle: 1:1
Medium: HSL_1750_230107 Medium parameters used: f = 1770 MHz; σ = 1.37 S/m; ε_r = 39.847; ρ = 1000 kg/m^3
Ambient Temperature：23.7 ℃; Liquid Temperature：22.7 ℃

DASY5 Configuration
- Probe: EX3DV4 - SN3925; ConvF(8.94, 8.94, 8.94) @ 1770 MHz; Calibrated: 2022/4/29
- Sensor-Surface: 1.4mm (Mechanical Surface Detection)
- Electronics: DAE4 Sn778; Calibrated: 2022/5/30
- Phantom: SAM_Left; Type: QD000P40CD; Serial: 1719
- Measurement SW: DASY52, Version 52.10 (4); SEMCAD X Version 14.6.14 (7483)

Area Scan (61x81x1): Interpolated grid: dx=1.500 mm, dy=1.500 mm
Maximum value of SAR (interpolated) = 1.42 W/kg

Zoom Scan (5x5x7)/Cube 0: Measurement grid: dx=8mm, dy=8mm, dz=5mm
Reference Value = 31.72 V/m; Power Drift = 0.06 dB
Peak SAR (extrapolated) = 1.55 W/kg
SAR(1 g) = 0.913 W/kg; SAR(10 g) = 0.485 W/kg
Smallest distance from peaks to all points 3 dB below = 9.6 mm
Ratio of SAR at M2 to SAR at M1 = 60%
Maximum value of SAR (measured) = 1.34 W/kg

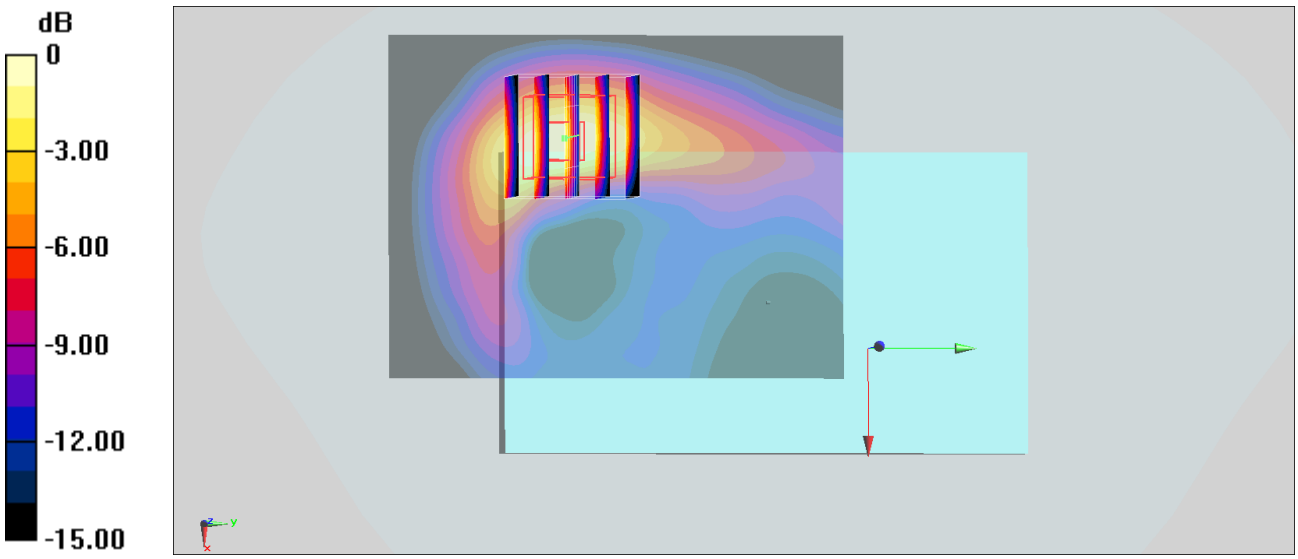

0 dB = 1.34 W/kg = 1.27 dBW/kg

Test Laboratory: Sporton International Inc. SAR/HAC Testing Lab Date: 2022/12/8

#53_LTE Band 71 Ant 0_20M_QPSK_1_0_Front_10mm_Ch133297

Communication System: LTE; Frequency: 680.5 MHz;Duty Cycle: 1:1
Medium: HSL_750_221208 Medium parameters used : f = 680.5 MHz; σ = 0.861 S/m; ε_r = 43.143; ρ = 1000 kg/m^3
Ambient Temperature：23.5 ℃; Liquid Temperature：22.5 ℃

DASY5 Configuration:
- Probe: EX3DV4 - SN3925; ConvF(10.46, 10.46, 10.46) @ 680.5 MHz; Calibrated: 2022/4/29
- Sensor-Surface: 1.4mm (Mechanical Surface Detection)
- Electronics: DAE4 Sn778; Calibrated: 2022/5/30
- Phantom: SAM_Left; Type: QD000P40CD; Serial: 1719
- Measurement SW: DASY52, Version 52.10 (4);SEMCAD X Version 14.6.14 (7483)

Area Scan (71x71x1): Interpolated grid: dx=1.500 mm, dy=1.500 mm
Maximum value of SAR (interpolated) = 0.554 W/kg

Zoom Scan (5x5x7)/Cube 0: Measurement grid: dx=8mm, dy=8mm, dz=5mm
Reference Value = 23.75 V/m; Power Drift = -0.00 dB
Peak SAR (extrapolated) = 0.636 W/kg
SAR(1 g) = 0.417 W/kg; SAR(10 g) = 0.280 W/kg
Smallest distance from peaks to all points 3 dB below = 17.3 mm
Ratio of SAR at M2 to SAR at M1 = 62.1%
Maximum value of SAR (measured) = 0.544 W/kg

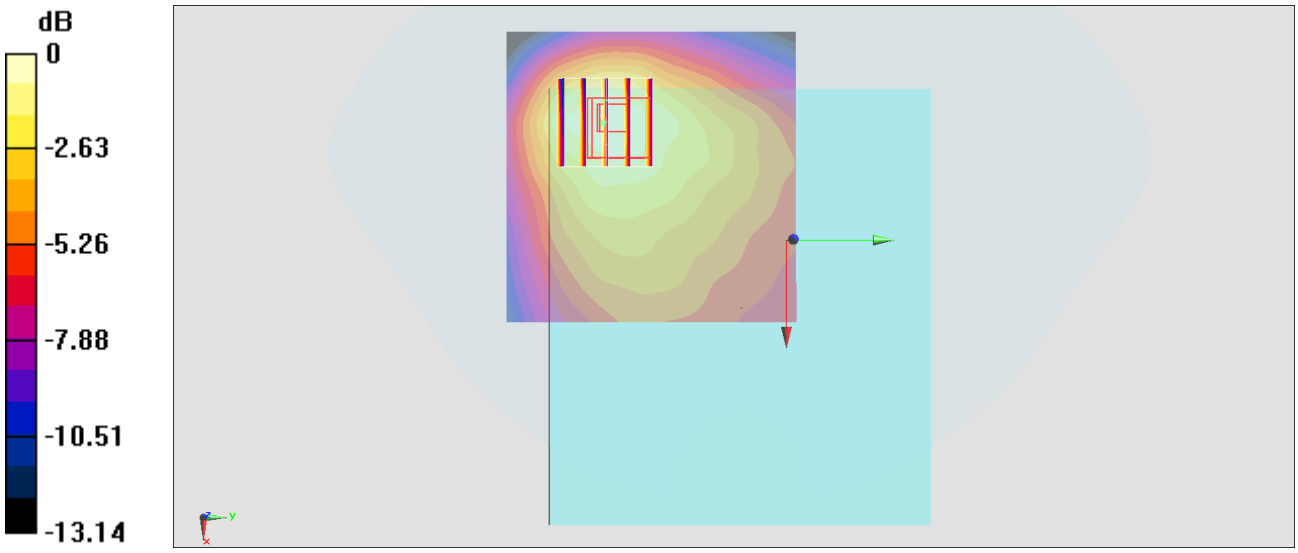

0 dB = 0.544 W/kg = -2.64 dBW/kg

#54_LTE Band 38 HPUE Ant 0_20M_QPSK_1_0_Back_10mm_Ch37850

Communication System: LTE; Frequency: 2580 MHz;Duty Cycle: 1:2.33
Medium: HSL_2600_221221 Medium parameters used: f = 2580 MHz; σ = 1.99 S/m; ε_r = 38.629; ρ = 1000 kg/m^3
Ambient Temperature：23.2 ℃; Liquid Temperature：22.2 ℃

DASY5 Configuration
- Probe: EX3DV4 - SN7692; ConvF(8.33, 8.33, 8.33) @ 2580 MHz; Calibrated: 2022/11/21
- Sensor-Surface: 1.4mm (Mechanical Surface Detection)
- Electronics: DAE4 Sn1696; Calibrated: 2022/11/9
- Phantom: Twin-SAM V5.0 (30deg probe tilt); Type: QD 000 P40 CD; Serial: 1815
- Measurement SW: DASY52, Version 52.10 (4); SEMCAD X Version 14.6.14 (7483)

Area Scan (101x131x1): Interpolated grid: dx=1.200 mm, dy=1.200 mm
Maximum value of SAR (interpolated) = 0.785 W/kg

Zoom Scan (7x7x7)/Cube 0: Measurement grid: dx=5mm, dy=5mm, dz=5mm
Reference Value = 17.67 V/m; Power Drift = -0.09 dB
Peak SAR (extrapolated) = 0.953 W/kg
SAR(1 g) = 0.433 W/kg; SAR(10 g) = 0.190 W/kg
Smallest distance from peaks to all points 3 dB below = 7.1 mm
Ratio of SAR at M2 to SAR at M1 = 46.4%
Maximum value of SAR (measured) = 0.729 W/kg

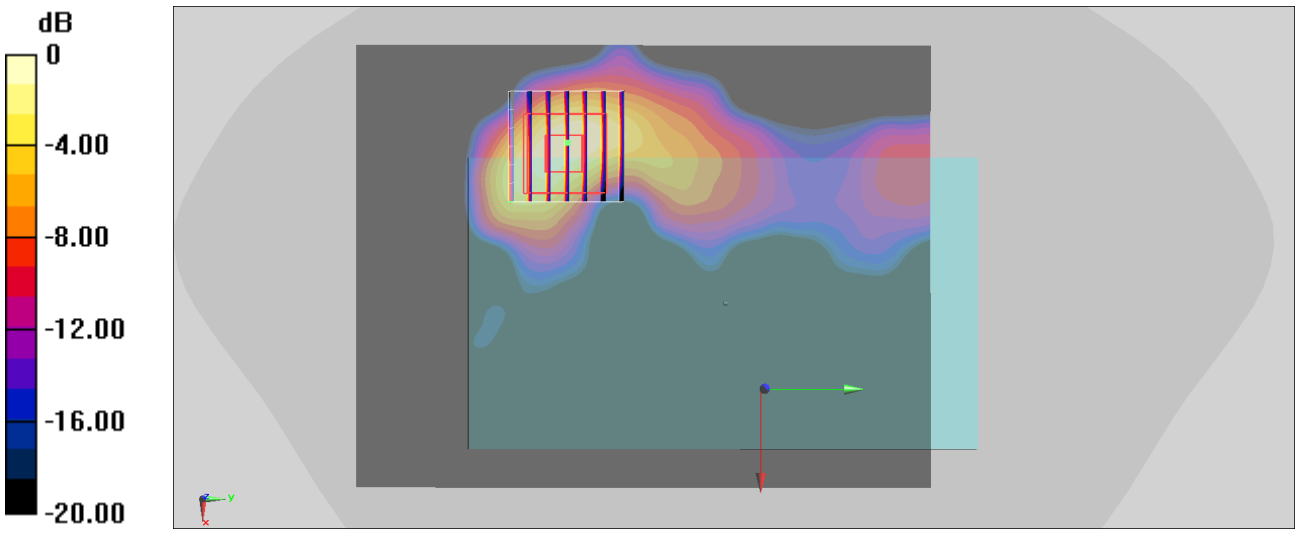

0 dB = 0.729 W/kg = -1.37 dBW/kg

#55_LTE Band 41 Ant 0_20M_QPSK_1_0_Front_10mm_Ch41490

Communication System: LTE; Frequency: 2680 MHz;Duty Cycle: 1:1.59
Medium: HSL_2600_230120 Medium parameters used: f = 2680 MHz; σ = 2.075 S/m; ε_r = 38.4; ρ = 1000 kg/m^3
Ambient Temperature：23.2 ℃; Liquid Temperature：22.2 ℃

DASY5 Configuration
- Probe: EX3DV4 - SN3925; ConvF(7.96, 7.96, 7.96) @ 2680 MHz; Calibrated: 2022/4/29
- Sensor-Surface: 1.4mm (Mechanical Surface Detection)
- Electronics: DAE4 Sn778; Calibrated: 2022/5/30
- Phantom: SAM_Left; Type: QD000P40CD; Serial: 1719
- Measurement SW: DASY52, Version 52.10 (4); SEMCAD X Version 14.6.14 (7483)

Area Scan (61x81x1): Interpolated grid: dx=1.200 mm, dy=1.200 mm
Maximum value of SAR (interpolated) = 1.50 W/kg

Zoom Scan (7x7x7)/Cube 0: Measurement grid: dx=5mm, dy=5mm, dz=5mm
Reference Value = 25.16 V/m; Power Drift = -0.16 dB
Peak SAR (extrapolated) = 1.86 W/kg
SAR(1 g) = 0.879 W/kg; SAR(10 g) = 0.397 W/kg
Smallest distance from peaks to all points 3 dB below = 6.4 mm
Ratio of SAR at M2 to SAR at M1 = 49.3%
Maximum value of SAR (measured) = 1.47 W/kg

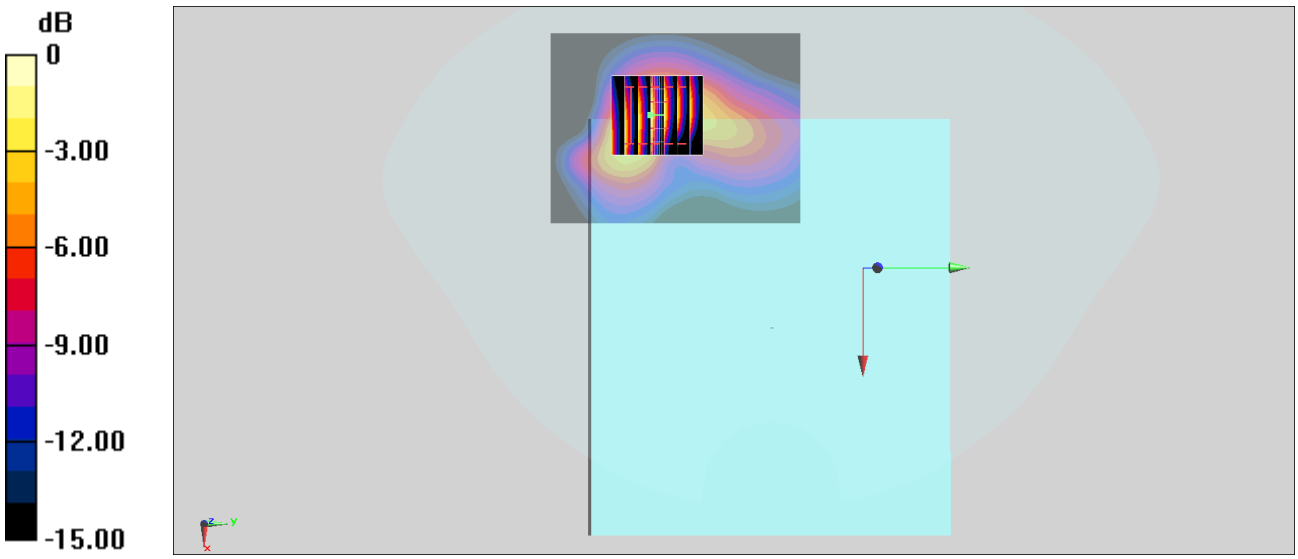

0 dB = 1.47 W/kg = 1.67 dBW/kg

#56_LTE Band 48 Ant 6_20M_QPSK_1_0_Back_10mm_Ch56640

Communication System: LTE; Frequency: 3690 MHz;Duty Cycle: 1:1.59
Medium: HSL_3300~4200_221230 Medium parameters used : f = 3690 MHz; σ = 3.113 S/m; ε_r = 37.756; ρ = 1000 kg/m^3
Ambient Temperature：23.3 ℃; Liquid Temperature：22.3 ℃

DASY5 Configuration
- Probe: EX3DV4 - SN3925; ConvF(6.98, 6.98, 6.98) @ 3690 MHz; Calibrated: 2022/4/29
- Sensor-Surface: 1.4mm (Mechanical Surface Detection)
- Electronics: DAE4 Sn778; Calibrated: 2022/5/30
- Phantom: SAM_Left; Type: QD000P40CD; Serial: 1719
- Measurement SW: DASY52, Version 52.10 (4); SEMCAD X Version 14.6.14 (7483)

Area Scan (71x91x1): Interpolated grid: dx=1.200 mm, dy=1.200 mm
Maximum value of SAR (interpolated) = 1.09 W/kg

Zoom Scan (7x7x8)/Cube 0: Measurement grid: dx=5mm, dy=5mm, dz=1.4mm
Reference Value = 19.46 V/m; Power Drift = -0.13 dB
Peak SAR (extrapolated) = 1.52 W/kg
SAR(1 g) = 0.587 W/kg; SAR(10 g) = 0.252 W/kg
Smallest distance from peaks to all points 3 dB below = 10.1 mm
Ratio of SAR at M2 to SAR at M1 = 75.2%
Maximum value of SAR (measured) = 1.12 W/kg

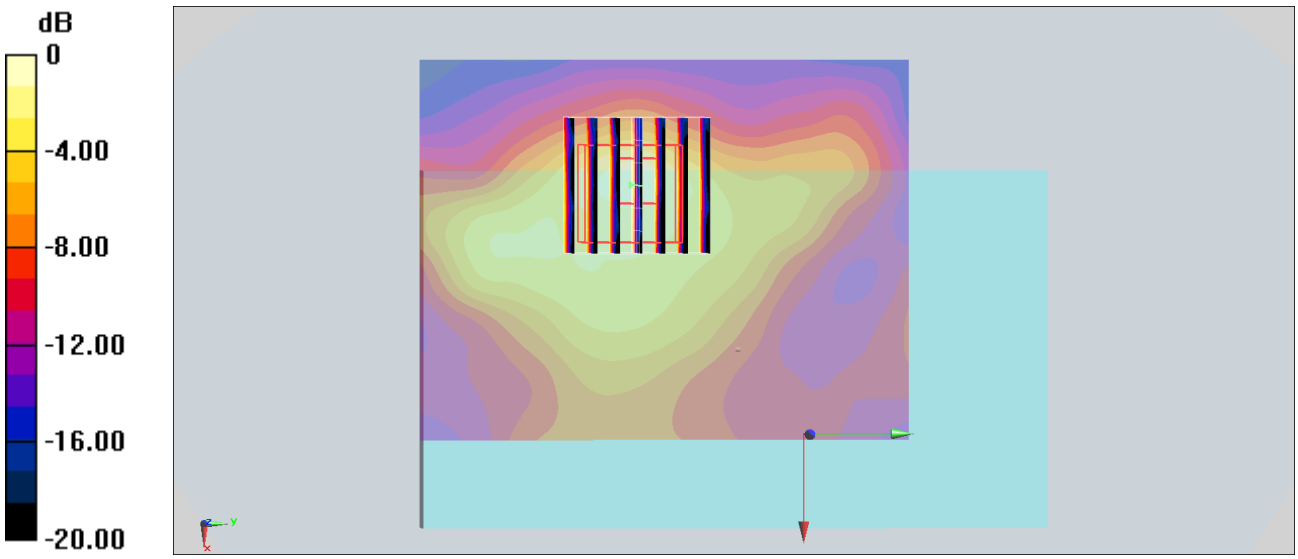

0 dB = 1.12 W/kg = 0.49 dBW/kg

#57_FR1 n2 Ant 1_20M_BPSK_1_53_Right Side_10mm_Ch380000

Communication System: NR; Frequency: 1900 MHz;Duty Cycle: 1:1
Medium: HSL_1900_230115 Medium parameters used: f = 1900 MHz; σ = 1.412 S/m; ε_r = 39.857; ρ = 1000 kg/m^3
Ambient Temperature：23.2 ℃; Liquid Temperature：22.2 ℃

DASY5 Configuration
- Probe: EX3DV4 - SN3925; ConvF(8.7, 8.7, 8.7) @ 1900 MHz; Calibrated: 2022/4/29
- Sensor-Surface: 1.4mm (Mechanical Surface Detection)
- Electronics: DAE4 Sn778; Calibrated: 2022/5/30
- Phantom: SAM_Left; Type: QD000P40CD; Serial: 1719
- Measurement SW: DASY52, Version 52.10 (4); SEMCAD X Version 14.6.14 (7483)

Area Scan (41x121x1): Interpolated grid: dx=1.500 mm, dy=1.500 mm
Maximum value of SAR (interpolated) = 1.20 W/kg

Zoom Scan (5x5x7)/Cube 0: Measurement grid: dx=8mm, dy=8mm, dz=5mm
Reference Value = 28.69 V/m; Power Drift = 0.13 dB
Peak SAR (extrapolated) = 1.43 W/kg
SAR(1 g) = 0.776 W/kg; SAR(10 g) = 0.369 W/kg
Smallest distance from peaks to all points 3 dB below = 8 mm
Ratio of SAR at M2 to SAR at M1 = 59.3%
Maximum value of SAR (measured) = 1.12 W/kg

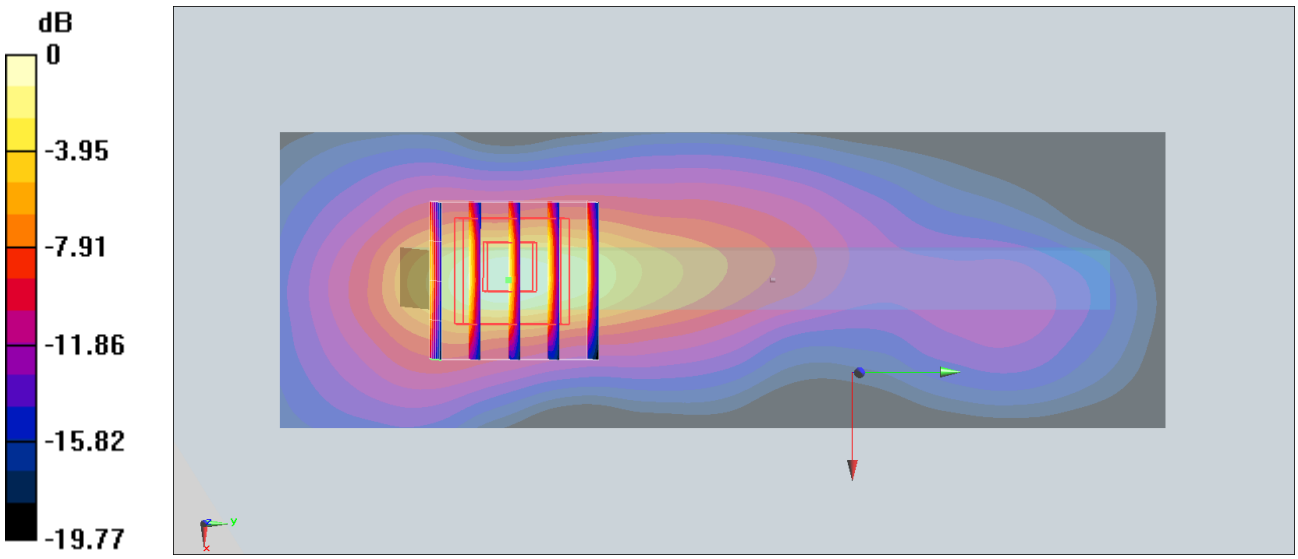

0 dB = 1.12 W/kg = 0.49 dBW/kg

Test Laboratory: Sporton International Inc. SAR/HAC Testing Lab Date: 2022/12/9

#58_FR1 n5 Ant 0_20M_BPSK_1_53_Front_10mm_Ch167300

Communication System: NR; Frequency: 836.5 MHz;Duty Cycle: 1:1
Medium: HSL_850_221209 Medium parameters used : f = 836.5 MHz; σ = 0.922 S/m; ε_r = 42.65; ρ = 1000 kg/m^3
Ambient Temperature：23.5 ℃; Liquid Temperature：22.5 ℃

DASY5 Configuration:
- Probe: EX3DV4 - SN3925; ConvF(10.28, 10.28, 10.28) @ 836.5 MHz; Calibrated: 2022/4/29
- Sensor-Surface: 1.4mm (Mechanical Surface Detection)
- Electronics: DAE4 Sn778; Calibrated: 2022/5/30
- Phantom: SAM_Left; Type: QD000P40CD; Serial: 1719
- Measurement SW: DASY52, Version 52.10 (4);SEMCAD X Version 14.6.14 (7483)

Area Scan (71x71x1): Interpolated grid: dx=1.500 mm, dy=1.500 mm
Maximum value of SAR (interpolated) = 0.749 W/kg

Zoom Scan (5x5x7)/Cube 0: Measurement grid: dx=8mm, dy=8mm, dz=5mm
Reference Value = 24.84 V/m; Power Drift = 0.10 dB
Peak SAR (extrapolated) = 0.814 W/kg
SAR(1 g) = 0.543 W/kg; SAR(10 g) = 0.358 W/kg
Smallest distance from peaks to all points 3 dB below = 17 mm
Ratio of SAR at M2 to SAR at M1 = 67.8%
Maximum value of SAR (measured) = 0.714 W/kg

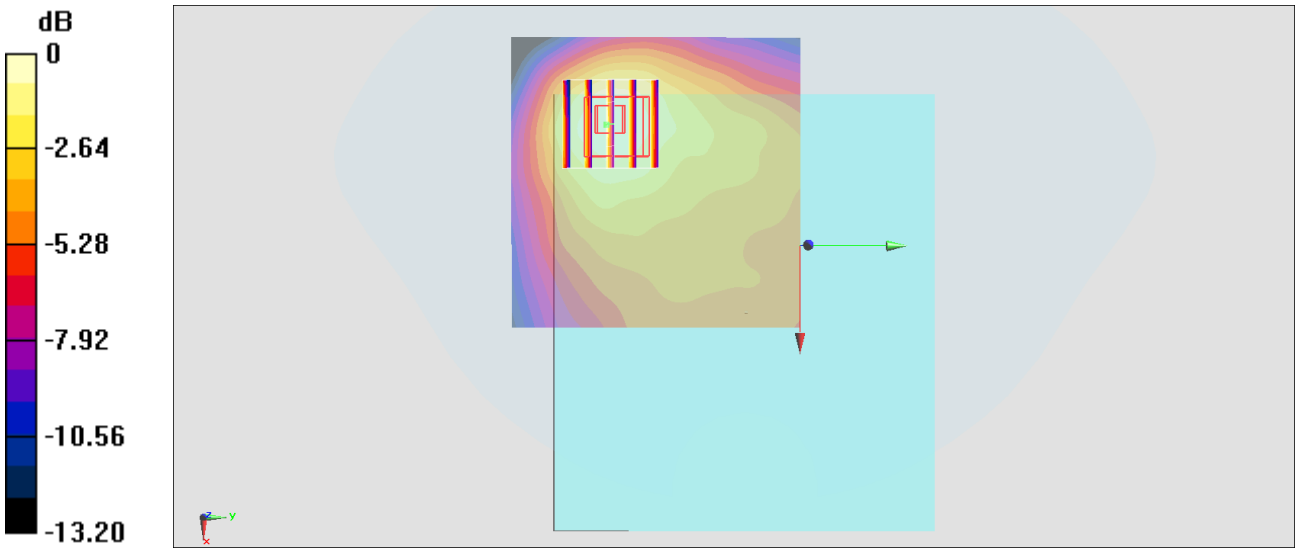

0 dB = 0.714 W/kg = -1.46 dBW/kg

#59_FR1 n7 Ant 2_50M_BPSK_1_1_Bottom Side_10mm_Ch507000

Communication System: NR; Frequency: 2535 MHz;Duty Cycle: 1:1
Medium: HSL_2600_230122 Medium parameters used : f = 2535 MHz; σ = 1.912 S/m; ε_r = 38.623; ρ = 1000 kg/m^3
Ambient Temperature：23.2 ℃; Liquid Temperature：22.2 ℃

DASY5 Configuration
- Probe: EX3DV4 - SN3925; ConvF(7.96, 7.96, 7.96) @ 2535 MHz; Calibrated: 2022/4/29
- Sensor-Surface: 1.4mm (Mechanical Surface Detection)
- Electronics: DAE4 Sn778; Calibrated: 2022/5/30
- Phantom: SAM_Left; Type: QD000P40CD; Serial: 1719
- Measurement SW: DASY52, Version 52.10 (4); SEMCAD X Version 14.6.14 (7483)

Area Scan (51x81x1): Interpolated grid: dx=1.200 mm, dy=1.200 mm
Maximum value of SAR (interpolated) = 1.41 W/kg

Zoom Scan (7x7x7)/Cube 0: Measurement grid: dx=5mm, dy=5mm, dz=5mm
Reference Value = 24.07 V/m; Power Drift = -0.03 dB
Peak SAR (extrapolated) = 1.53 W/kg
SAR(1 g) = 0.801 W/kg; SAR(10 g) = 0.391 W/kg
Smallest distance from peaks to all points 3 dB below = 9.8 mm
Ratio of SAR at M2 to SAR at M1 = 53.3%
Maximum value of SAR (measured) = 1.26 W/kg

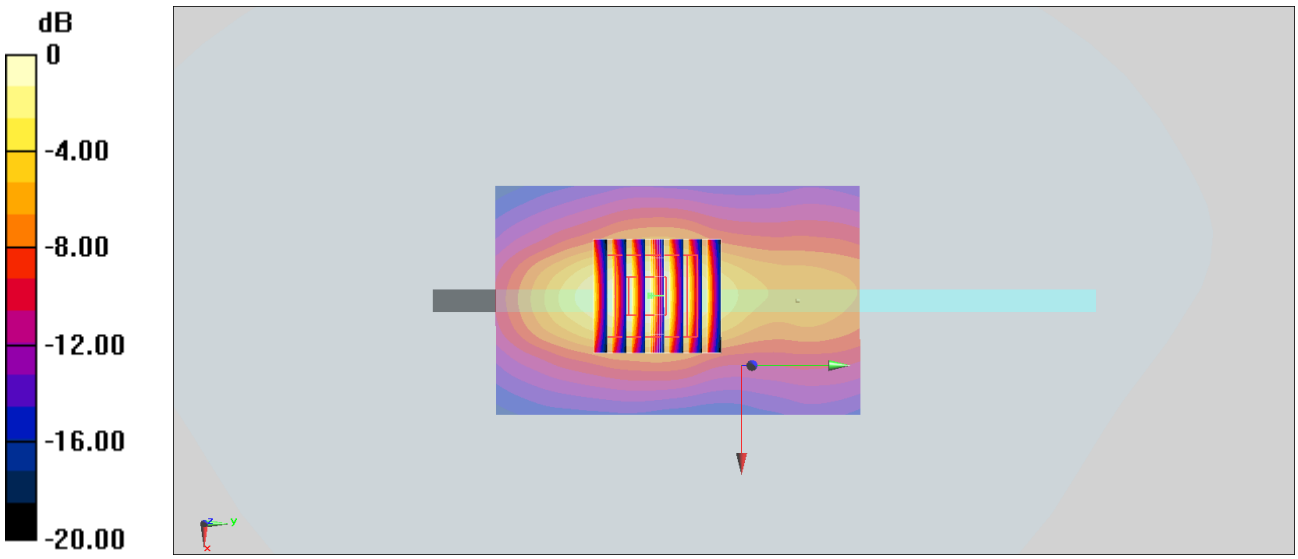

0 dB = 1.26 W/kg = 1.00 dBW/kg

Test Laboratory: Sporton International Inc. SAR/HAC Testing Lab Date: 2022/12/13

#60_FR1 n12 Ant 0_15M_BPSK_1_1_Front_10mm_Ch141500

Communication System: NR; Frequency: 707.5 MHz;Duty Cycle: 1:1
Medium: HSL_750_221213 Medium parameters used : f = 707.5 MHz; σ = 0.874 S/m; ε_r = 43.058; ρ = 1000 kg/m^3
Ambient Temperature：23.4 ℃; Liquid Temperature：22.4 ℃

DASY5 Configuration:
- Probe: EX3DV4 - SN3925; ConvF(10.46, 10.46, 10.46) @ 707.5 MHz; Calibrated: 2022/4/29
- Sensor-Surface: 1.4mm (Mechanical Surface Detection)
- Electronics: DAE4 Sn778; Calibrated: 2022/5/30
- Phantom: SAM_Left; Type: QD000P40CD; Serial: 1719
- Measurement SW: DASY52, Version 52.10 (4);SEMCAD X Version 14.6.14 (7483)

Area Scan (71x71x1): Interpolated grid: dx=1.500 mm, dy=1.500 mm
Maximum value of SAR (interpolated) = 0.659 W/kg

Zoom Scan (5x5x7)/Cube 0: Measurement grid: dx=8mm, dy=8mm, dz=5mm
Reference Value = 26.03 V/m; Power Drift = 0.07 dB
Peak SAR (extrapolated) = 0.766 W/kg
SAR(1 g) = 0.503 W/kg; SAR(10 g) = 0.335 W/kg
Smallest distance from peaks to all points 3 dB below = 22.2 mm
Ratio of SAR at M2 to SAR at M1 = 68.7%
Maximum value of SAR (measured) = 0.646 W/kg

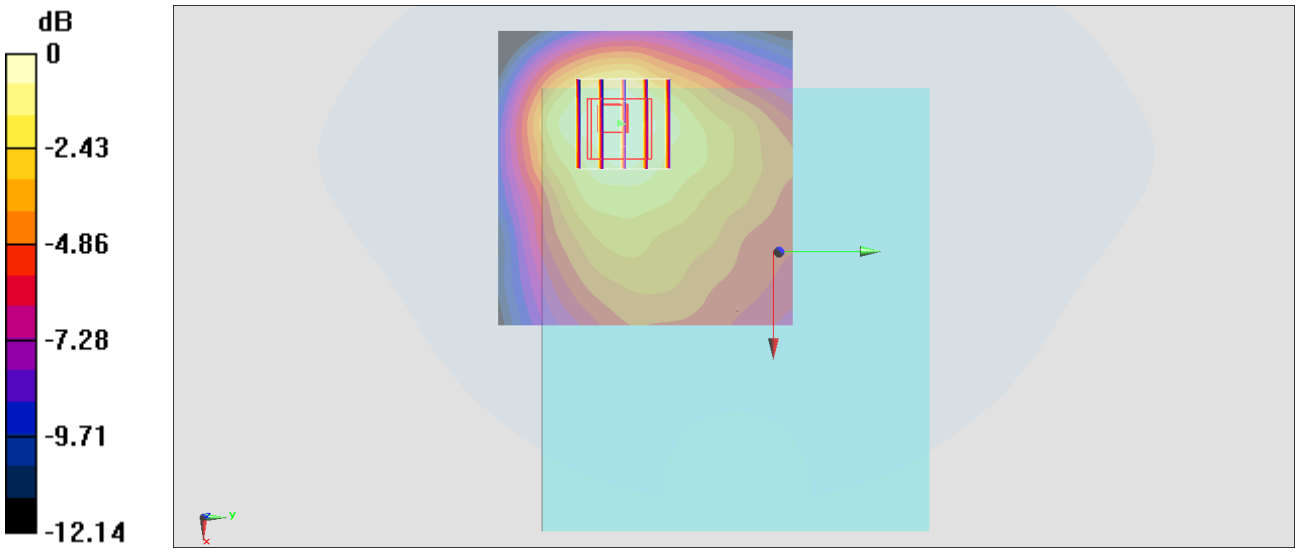

0 dB = 0.646 W/kg = -1.90 dBW/kg

Test Laboratory: Sporton International Inc. SAR/HAC Testing Lab Date: 2022/12/13

#61_FR1 n14 Ant 0_10M_BPSK_1_1_Front_10mm_Ch158600

Communication System: NR; Frequency: 793 MHz;Duty Cycle: 1:1
Medium: HSL_750_221213 Medium parameters used: f = 793 MHz; σ = 0.902 S/m; ε_r = 42.374; ρ = 1000 kg/m^3
Ambient Temperature：23.4 ℃; Liquid Temperature：22.4 ℃

DASY5 Configuration:
- Probe: EX3DV4 - SN3925; ConvF(10.46, 10.46, 10.46) @ 793 MHz; Calibrated: 2022/4/29
- Sensor-Surface: 1.4mm (Mechanical Surface Detection)
- Electronics: DAE4 Sn778; Calibrated: 2022/5/30
- Phantom: SAM_Left; Type: QD000P40CD; Serial: 1719
- Measurement SW: DASY52, Version 52.10 (4);SEMCAD X Version 14.6.14 (7483)

Area Scan (71x71x1): Interpolated grid: dx=1.500 mm, dy=1.500 mm
Maximum value of SAR (interpolated) = 0.700 W/kg

Zoom Scan (5x5x7)/Cube 0: Measurement grid: dx=8mm, dy=8mm, dz=5mm
Reference Value = 25.73 V/m; Power Drift = -0.06 dB
Peak SAR (extrapolated) = 0.737 W/kg
SAR(1 g) = 0.506 W/kg; SAR(10 g) = 0.341 W/kg
Smallest distance from peaks to all points 3 dB below = 19.3 mm
Ratio of SAR at M2 to SAR at M1 = 69.1%
Maximum value of SAR (measured) = 0.655 W/kg

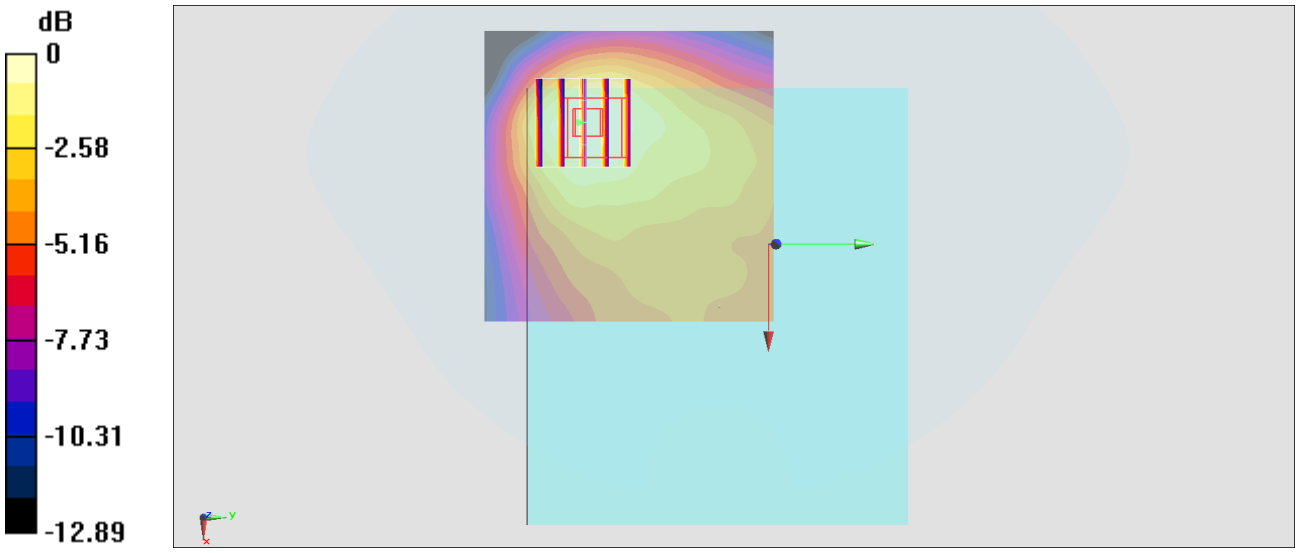

0 dB = 0.655 W/kg = -1.84 dBW/kg

#62_FR1 n25 Ant 2_40M_BPSK_1_108_Bottom Side_10mm_Ch376500

Communication System: NR; Frequency: 1882.5 MHz;Duty Cycle: 1:1
Medium: HSL_1900_230123 Medium parameters used : f = 1882.5 MHz; σ = 1.408 S/m; ε_r = 39.956; ρ = 1000 kg/m^3
Ambient Temperature：23.3 ℃; Liquid Temperature：22.3 ℃

DASY5 Configuration
- Probe: EX3DV4 - SN3925; ConvF(8.7, 8.7, 8.7) @ 1882.5 MHz; Calibrated: 2022/4/29
- Sensor-Surface: 1.4mm (Mechanical Surface Detection)
- Electronics: DAE4 Sn778; Calibrated: 2022/5/30
- Phantom: SAM_Left; Type: QD000P40CD; Serial: 1719
- Measurement SW: DASY52, Version 52.10 (4); SEMCAD X Version 14.6.14 (7483)

Area Scan (41x61x1): Interpolated grid: dx=1.500 mm, dy=1.500 mm
Maximum value of SAR (interpolated) = 1.28 W/kg

Zoom Scan (5x5x7)/Cube 0: Measurement grid: dx=8mm, dy=8mm, dz=5mm
Reference Value = 29.60 V/m; Power Drift = 0.04 dB
Peak SAR (extrapolated) = 1.42 W/kg
SAR(1 g) = 0.816 W/kg; SAR(10 g) = 0.430 W/kg
Smallest distance from peaks to all points 3 dB below = 9.6 mm
Ratio of SAR at M2 to SAR at M1 = 59.1%
Maximum value of SAR (measured) = 1.22 W/kg

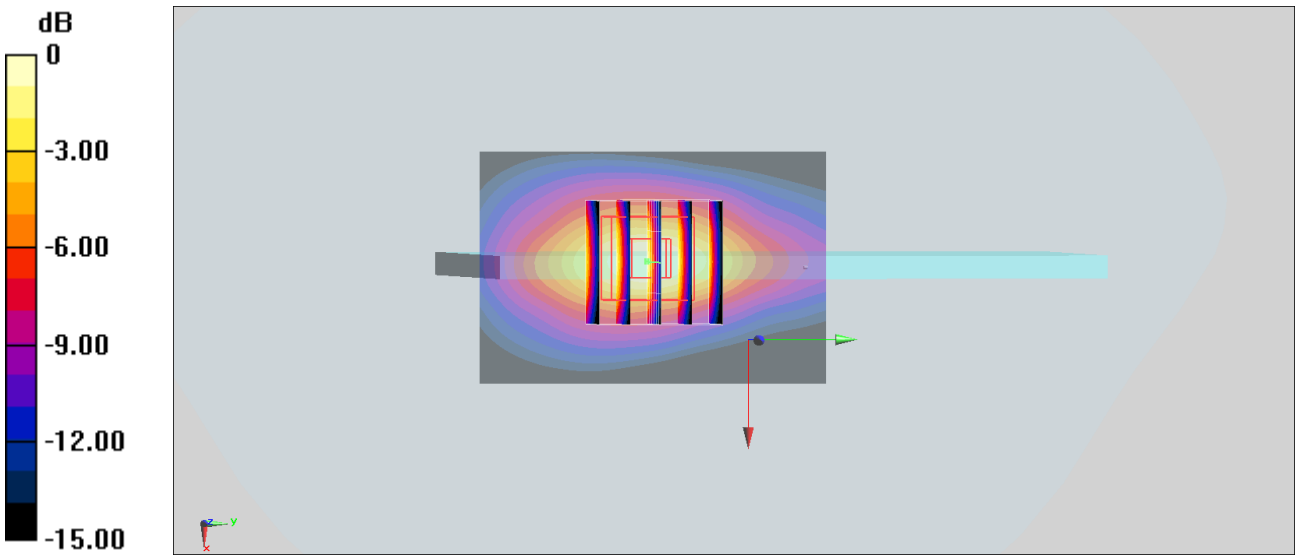

0 dB = 1.22 W/kg = 0.86 dBW/kg

#63_FR1 n30 Ant 2_10M_BPSK_1_1_Bottom Side_10mm_Ch462000

Communication System: NR; Frequency: 2310 MHz;Duty Cycle: 1:1
Medium: HSL_2300_230114 Medium parameters used: f = 2310 MHz; σ = 1.669 S/m; ε_r = 39.938; ρ = 1000 kg/m^3
Ambient Temperature：23.6 ℃; Liquid Temperature：22.6 ℃

DASY5 Configuration
- Probe: EX3DV4 - SN3925; ConvF(8.49, 8.49, 8.49) @ 2310 MHz; Calibrated: 2022/4/29
- Sensor-Surface: 1.4mm (Mechanical Surface Detection)
- Electronics: DAE4 Sn778; Calibrated: 2022/5/30
- Phantom: SAM_Left; Type: QD000P40CD; Serial: 1719
- Measurement SW: DASY52, Version 52.10 (4); SEMCAD X Version 14.6.14 (7483)

Area Scan (51x121x1): Interpolated grid: dx=1.200 mm, dy=1.200 mm
Maximum value of SAR (interpolated) = 1.49 W/kg

Zoom Scan (7x7x7)/Cube 0: Measurement grid: dx=5mm, dy=5mm, dz=5mm
Reference Value = 29.26 V/m; Power Drift = -0.04 dB
Peak SAR (extrapolated) = 1.67 W/kg
SAR(1 g) = 0.927 W/kg; SAR(10 g) = 0.465 W/kg
Smallest distance from peaks to all points 3 dB below = 10 mm
Ratio of SAR at M2 to SAR at M1 = 56.8%
Maximum value of SAR (measured) = 1.41 W/kg

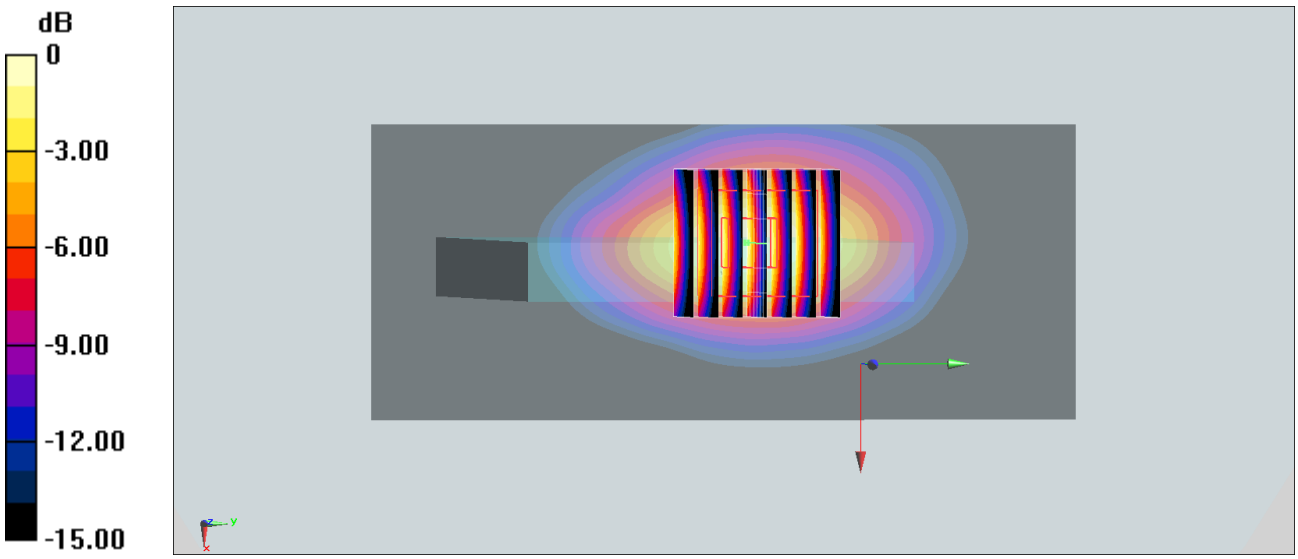

0 dB = 1.41 W/kg = 1.49 dBW/kg

#64_FR1 n66 Ant 0_40M_BPSK_1_108_Right Side_10mm_Ch349000

Communication System: NR; Frequency: 1745 MHz;Duty Cycle: 1:1
Medium: HSL_1750_230114 Medium parameters used : f = 1745 MHz; σ = 1.357 S/m; ε_r = 40.198; ρ = 1000 kg/m^3
Ambient Temperature：23.6 ℃; Liquid Temperature：22.6 ℃

DASY5 Configuration
- Probe: EX3DV4 - SN3925; ConvF(8.94, 8.94, 8.94) @ 1745 MHz; Calibrated: 2022/4/29
- Sensor-Surface: 1.4mm (Mechanical Surface Detection)
- Electronics: DAE4 Sn778; Calibrated: 2022/5/30
- Phantom: SAM_Left; Type: QD000P40CD; Serial: 1719
- Measurement SW: DASY52, Version 52.10 (4); SEMCAD X Version 14.6.14 (7483)

Area Scan (41x121x1): Interpolated grid: dx=1.500 mm, dy=1.500 mm
Maximum value of SAR (interpolated) = 1.29 W/kg

Zoom Scan (5x5x7)/Cube 0: Measurement grid: dx=8mm, dy=8mm, dz=5mm
Reference Value = 22.25 V/m; Power Drift = 0.01 dB
Peak SAR (extrapolated) = 1.36 W/kg
SAR(1 g) = 0.781 W/kg; SAR(10 g) = 0.409 W/kg
Smallest distance from peaks to all points 3 dB below = 9.3 mm
Ratio of SAR at M2 to SAR at M1 = 59.4%
Maximum value of SAR (measured) = 1.13 W/kg

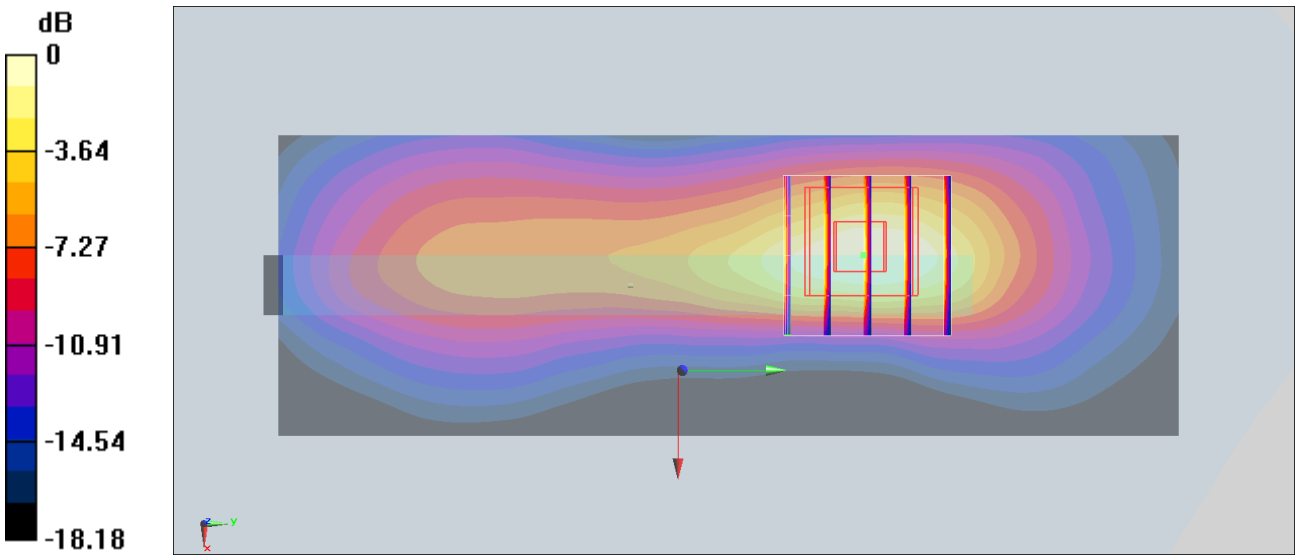

0 dB = 1.13 W/kg = 0.53 dBW/kg

#65_FR1 n71 Ant 0_20M_BPSK_1_53_Front_10mm_Ch136100

Communication System: NR; Frequency: 680.5 MHz;Duty Cycle: 1:1
Medium: HSL_750_221213 Medium parameters used : f = 680.5 MHz; σ = 0.858 S/m; ε_r = 42.99; ρ = 1000 kg/m^3
Ambient Temperature：23.4 ℃; Liquid Temperature：22.4 ℃

DASY5 Configuration
- Probe: EX3DV4 - SN3925; ConvF(10.46, 10.46, 10.46) @ 680.5 MHz; Calibrated: 2022/4/29
- Sensor-Surface: 1.4mm (Mechanical Surface Detection)
- Electronics: DAE4 Sn778; Calibrated: 2022/5/30
- Phantom: SAM_Left; Type: QD000P40CD; Serial: 1719
- Measurement SW: DASY52, Version 52.10 (4); SEMCAD X Version 14.6.14 (7483)

Area Scan (71x71x1): Interpolated grid: dx=1.500 mm, dy=1.500 mm
Maximum value of SAR (interpolated) = 0.648 W/kg

Zoom Scan (5x5x7)/Cube 0: Measurement grid: dx=8mm, dy=8mm, dz=5mm
Reference Value = 27.11 V/m; Power Drift = -0.09 dB
Peak SAR (extrapolated) = 0.731 W/kg
SAR(1 g) = 0.489 W/kg; SAR(10 g) = 0.331 W/kg
Smallest distance from peaks to all points 3 dB below = 22.2 mm
Ratio of SAR at M2 to SAR at M1 = 63.9%
Maximum value of SAR (measured) = 0.620 W/kg

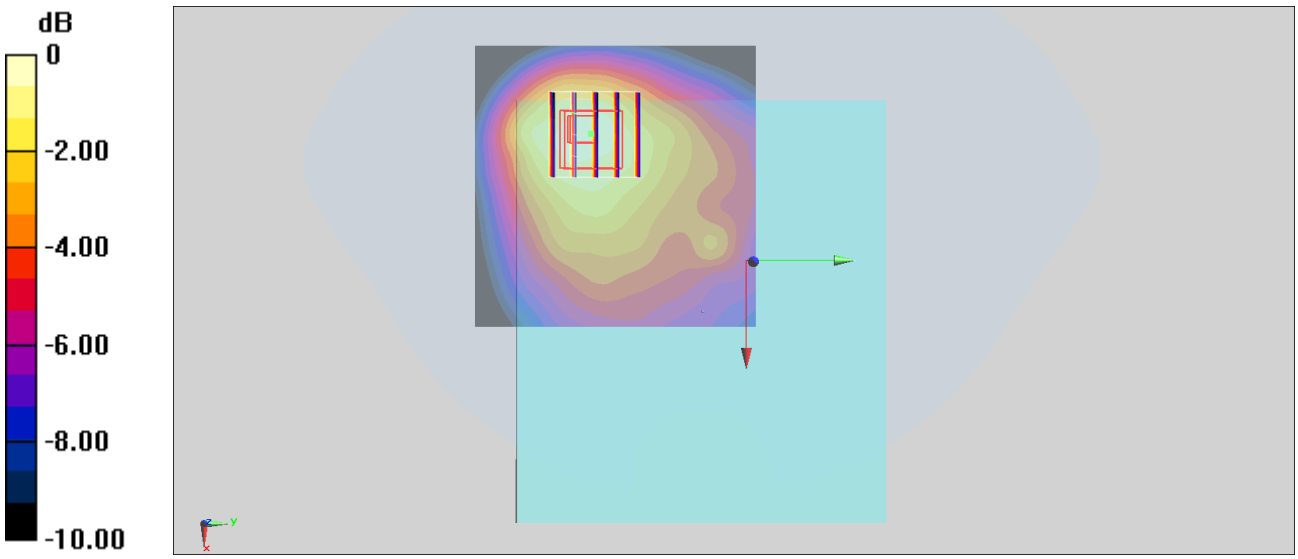

0 dB = 0.620 W/kg = -2.08 dBW/kg

#66_FR1 n38 Ant 0_20M_BPSK_1_1_Back_10mm_Ch519000

Communication System: NR; Frequency: 2595 MHz;Duty Cycle: 1:1
Medium: HSL_2600_221221 Medium parameters used : f = 2595 MHz; σ = 2.006 S/m; ε_r = 38.316; ρ = 1000 kg/m^3
Ambient Temperature：23.2 ℃; Liquid Temperature：22.2 ℃

DASY5 Configuration
- Probe: EX3DV4 - SN7692; ConvF(8.33, 8.33, 8.33) @ 2595 MHz; Calibrated: 2022/11/21
- Sensor-Surface: 1.4mm (Mechanical Surface Detection)
- Electronics: DAE4 Sn1696; Calibrated: 2022/11/9
- Phantom: Twin-SAM V5.0 (30deg probe tilt); Type: QD 000 P40 CD; Serial: 1815
- Measurement SW: DASY52, Version 52.10 (4); SEMCAD X Version 14.6.14 (7483)

Area Scan (101x121x1): Interpolated grid: dx=1.200 mm, dy=1.200 mm
Maximum value of SAR (interpolated) = 1.16 W/kg

Zoom Scan (7x7x7)/Cube 0: Measurement grid: dx=5mm, dy=5mm, dz=5mm
Reference Value = 20.85 V/m; Power Drift = -0.04 dB
Peak SAR (extrapolated) = 1.52 W/kg
SAR(1 g) = 0.687 W/kg; SAR(10 g) = 0.299 W/kg
Smallest distance from peaks to all points 3 dB below = 7.1 mm
Ratio of SAR at M2 to SAR at M1 = 46.3%
Maximum value of SAR (measured) = 1.13 W/kg

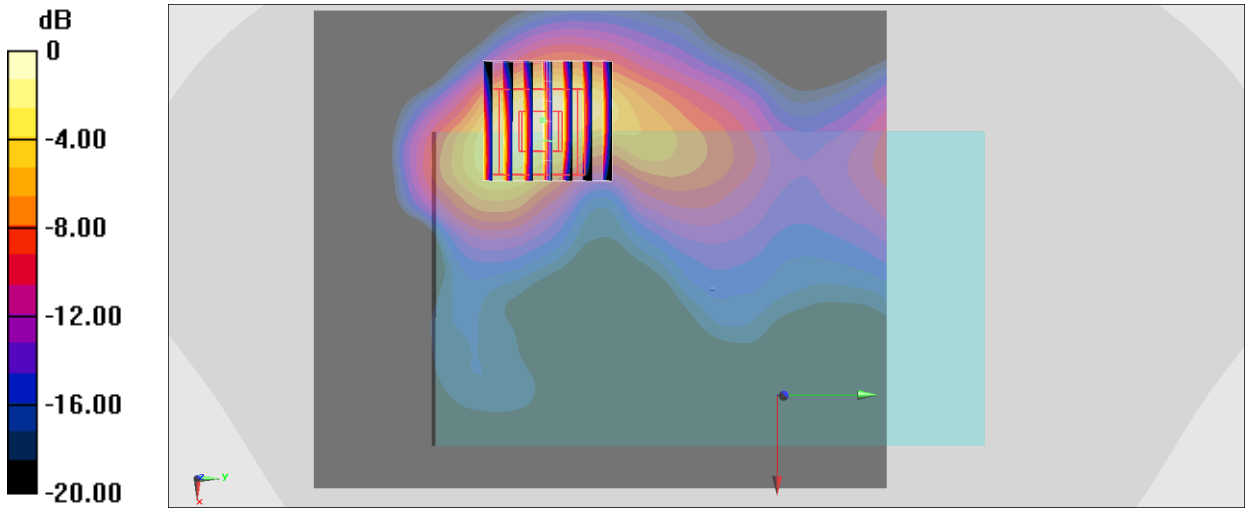

0 dB = 1.13 W/kg = 0.53 dBW/kg

#67_FR1 n41 Ant 2_100M_BPSK_1_1_Bottom Side_10mm_Ch518598

Communication System: NR; Frequency: 2592.99 MHz;Duty Cycle: 1:1
Medium: HSL_2600_221205 Medium parameters used : f = 2592.99 MHz; σ = 2 S/m; ε_r = 38.797; ρ = 1000 kg/m^3
Ambient Temperature：23.8 ℃; Liquid Temperature：22.8 ℃

DASY5 Configuration
- Probe: EX3DV4 - SN3925; ConvF(7.96, 7.96, 7.96) @ 2592.99 MHz; Calibrated: 2022/4/29
- Sensor-Surface: 1.4mm (Mechanical Surface Detection)
- Electronics: DAE4 Sn778; Calibrated: 2022/5/30
- Phantom: SAM_Left; Type: QD000P40CD; Serial: 1719
- Measurement SW: DASY52, Version 52.10 (4); SEMCAD X Version 14.6.14 (7483)

Area Scan (51x81x1): Interpolated grid: dx=1.200 mm, dy=1.200 mm
Maximum value of SAR (interpolated) = 1.47 W/kg

Zoom Scan (7x7x7)/Cube 0: Measurement grid: dx=5mm, dy=5mm, dz=5mm
Reference Value = 26.51 V/m; Power Drift = -0.03 dB
Peak SAR (extrapolated) = 1.66 W/kg
SAR(1 g) = 0.825 W/kg; SAR(10 g) = 0.419 W/kg
Smallest distance from peaks to all points 3 dB below = 9.8 mm
Ratio of SAR at M2 to SAR at M1 = 53%
Maximum value of SAR (measured) = 1.35 W/kg

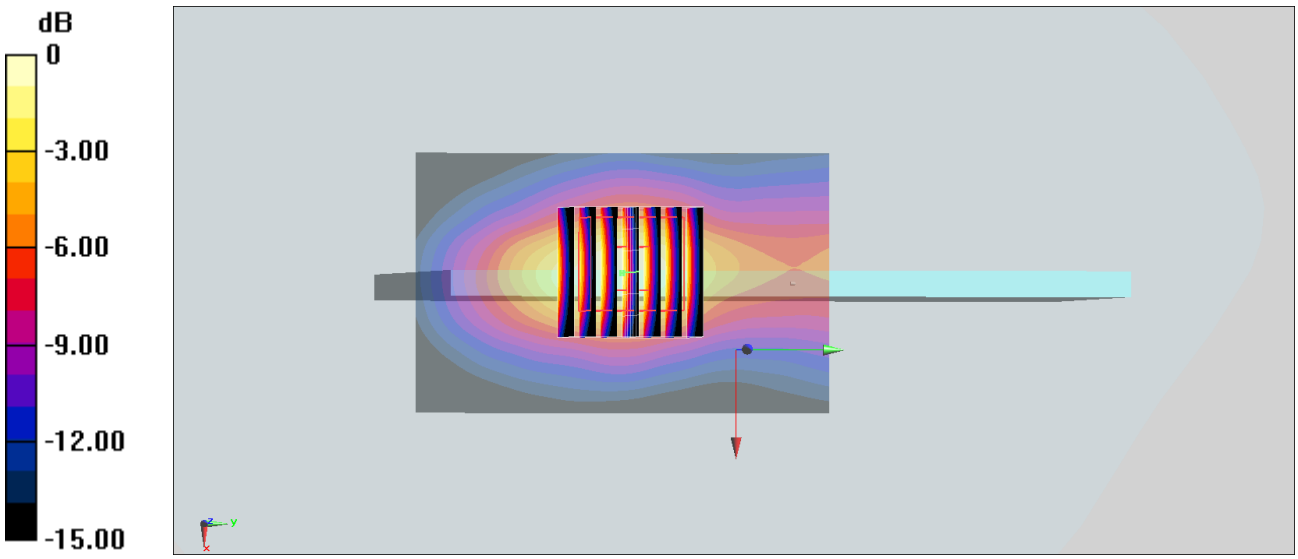

0 dB = 1.35 W/kg = 1.30 dBW/kg

Date: 2023-03-29

#68_FR1 n48 Ant 5_40M_BPSK_50_28_Back_10mm_Ch645332

Communication System: 5G NR ; Frequency: 3680.0 MHz; Duty Cycle: 1:1
Medium: HSL_3700_230329 Medium parameters used: f= 3680.0 MHz; σ= 3.07 S/m; ε_r = 37.4
Ambient Temperature: 23.5°C; Liquid Temperature: 22.5°C

DASY6 Configuration:
- Probe: EX3DV4 - SN3925; ConvF(6.98, 6.98, 6.98); Calibrated: 2022-04-29
- Sensor-Surface: 1.4 mm
- Electronics: DAE4 Sn778; Calibrated: 2022-05-30
- Phantom: Twin-SAM V5.0 (30deg probe tilt); Serial: 1719; Section: Flat
- Measurement Software: 16.2.2.1588
- UID: 5G NR FR1 TDD, 10903-AAB

Area Scan (80.0 mm x 80.0 mm): Measurement Grid: 10.0 mm x 10.0 mm
SAR (1g) = 0.856 W/kg; SAR (10g) = 0.276 W/kg;

Zoom Scan (28.0 mm x 28.0 mm x 28.0 mm): Measurement Grid: 5.0 mm x 5.0 mm x 1.4 mm
Power Drift = 0.05 dB
SAR (1g) = 0.910 W/kg; SAR (8g) = 0.350 W/kg; SAR (10g) = 0.304 W/kg
Smallest distance from peaks to all points 3 dB below = 6.8 mm
Ratio of SAR at M2 to SAR at M1 = 77.3 %

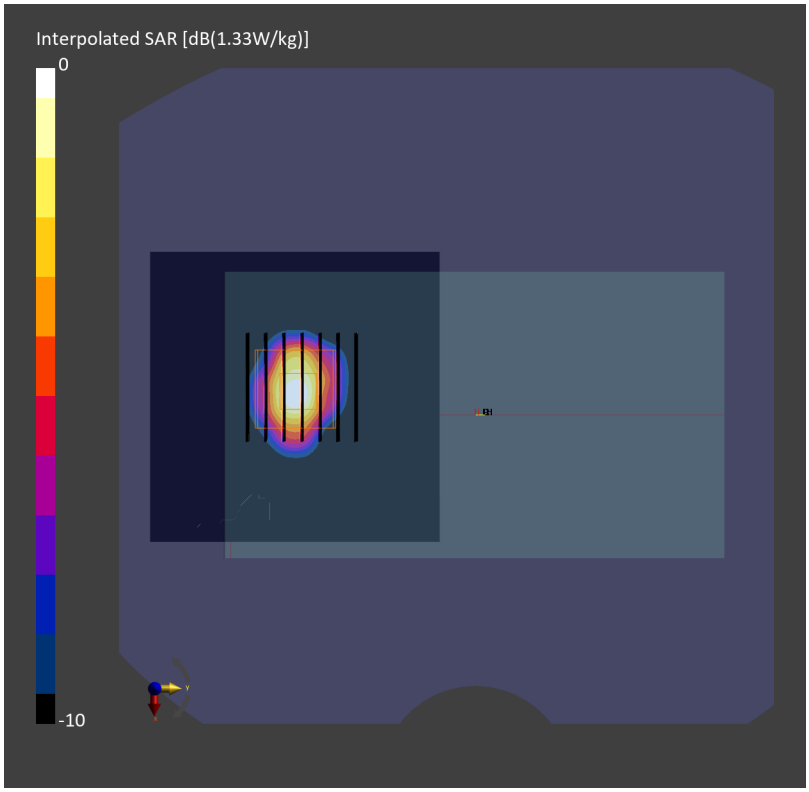

#69_FR1 n77 Ant 6_100M_BPSK_1_1_Back_10mm_Ch656000

Communication System: NR; Frequency: 3840 MHz;Duty Cycle: 1:1
Medium: HSL_3300~4200_221231 Medium parameters used: f = 3840 MHz; σ = 3.286 S/m; ε_r = 37.679; ρ = 1000 kg/m^3
Ambient Temperature：23.7 ℃; Liquid Temperature：22.7 ℃

DASY5 Configuration
- Probe: EX3DV4 - SN3925; ConvF(6.85, 6.85, 6.85) @ 3840 MHz; Calibrated: 2022/4/29
- Sensor-Surface: 1.4mm (Mechanical Surface Detection)
- Electronics: DAE4 Sn778; Calibrated: 2022/5/30
- Phantom: SAM_Left; Type: QD000P40CD; Serial: 1719
- Measurement SW: DASY52, Version 52.10 (4); SEMCAD X Version 14.6.14 (7483)

Area Scan (71x91x1): Interpolated grid: dx=1.200 mm, dy=1.200 mm
Maximum value of SAR (interpolated) = 1.73 W/kg

Zoom Scan (7x7x8)/Cube 0: Measurement grid: dx=5mm, dy=5mm, dz=1.4mm
Reference Value = 24.54 V/m; Power Drift = -0.17 dB
Peak SAR (extrapolated) = 2.06 W/kg
SAR(1 g) = 0.852 W/kg; SAR(10 g) = 0.332 W/kg
Smallest distance from peaks to all points 3 dB below = 9.2 mm
Ratio of SAR at M2 to SAR at M1 = 78.3%
Maximum value of SAR (measured) = 1.61 W/kg

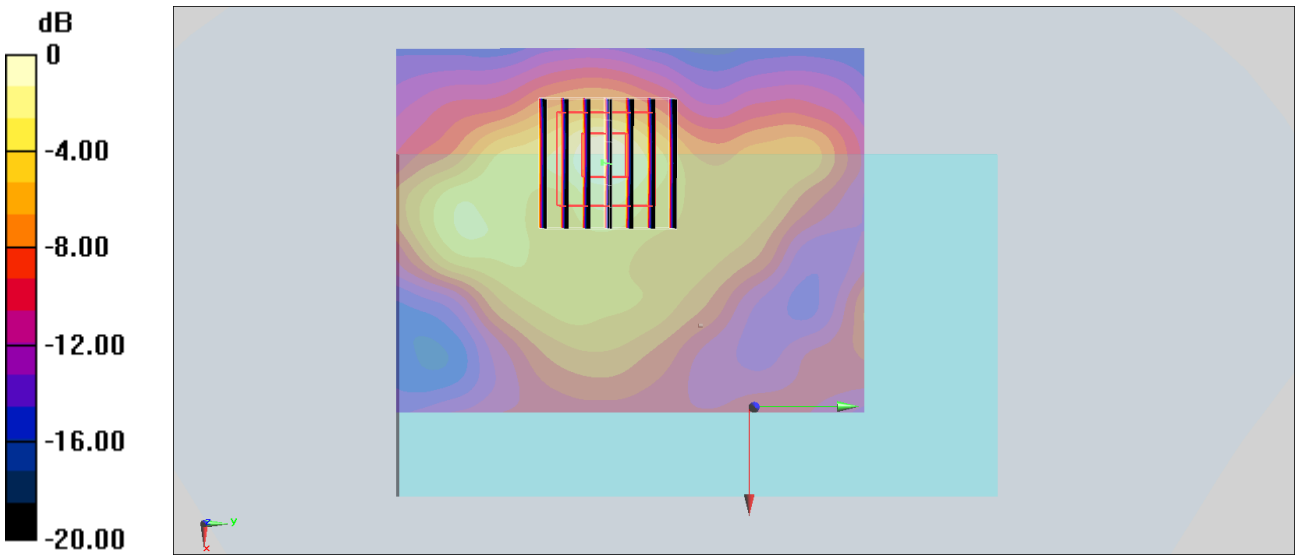

0 dB = 1.61 W/kg = 2.07 dBW/kg

#70_WLAN2.4GHz_802.11b 1Mbps_Front_10mm_Ch11;Ant 3

Communication System: 802.11b; Frequency: 2462 MHz;Duty Cycle: 1:1.009
Medium: HSL_2450_230101 Medium parameters used: f = 2462 MHz; σ = 1.864 S/m; ε_r = 38.967; ρ = 1000 kg/m^3
Ambient Temperature：23.3 ℃; Liquid Temperature：22.3 ℃

DASY5 Configuration
- Probe: EX3DV4 - SN3925; ConvF(8.2, 8.2, 8.2) @ 2462 MHz; Calibrated: 2022/4/29
- Sensor-Surface: 1.4mm (Mechanical Surface Detection)
- Electronics: DAE4 Sn778; Calibrated: 2022/5/30
- Phantom: SAM_Left; Type: QD000P40CD; Serial: 1719
- Measurement SW: DASY52, Version 52.10 (4); SEMCAD X Version 14.6.14 (7483)

Area Scan (71x71x1): Interpolated grid: dx=1.200 mm, dy=1.200 mm
Maximum value of SAR (interpolated) = 1.15 W/kg

Zoom Scan (7x7x7)/Cube 0: Measurement grid: dx=5mm, dy=5mm, dz=5mm
Reference Value = 24.97 V/m; Power Drift = -0.12 dB
Peak SAR (extrapolated) = 1.35 W/kg
SAR(1 g) = 0.696 W/kg; SAR(10 g) = 0.331 W/kg
Smallest distance from peaks to all points 3 dB below = 7.6 mm
Ratio of SAR at M2 to SAR at M1 = 55.1%
Maximum value of SAR (measured) = 1.08 W/kg

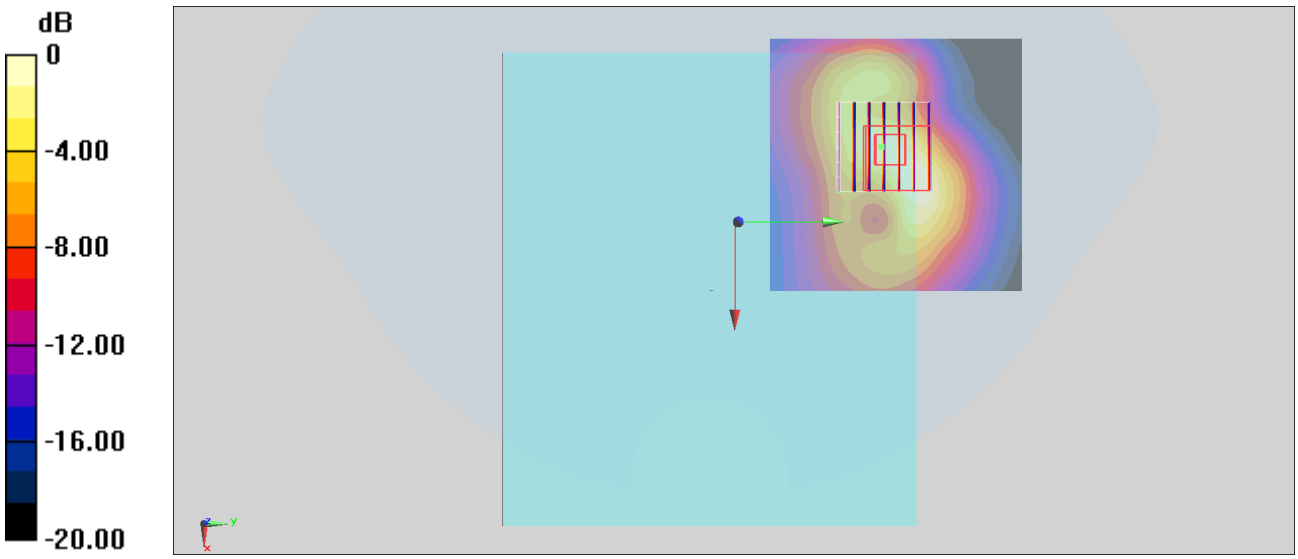

0 dB = 1.08 W/kg = 0.33 dBW/kg

#71_WLAN5GHz_802.11n-HT40 MCS0_Back_10mm_Ch46;Ant 3+4

Communication System: 802.11n; Frequency: 5230 MHz;Duty Cycle: 1:1.033
Medium: HSL_5250_230102 Medium parameters used: f = 5230 MHz; σ = 4.595 S/m; ε_r = 36.21; ρ = $1000_{kg/m^3}$
Ambient Temperature：23.8 ℃; Liquid Temperature：22.8 ℃

DASY5 Configuration
- Probe: EX3DV4 - SN3642; ConvF(4.58, 4.58, 4.58) @ 5230 MHz; Calibrated: 2022/4/29
- Sensor-Surface: 1.4mm (Mechanical Surface Detection)
- Electronics: DAE4 Sn854; Calibrated: 2022/8/24
- Phantom: SAM_Left; Type: QD000P40CD; Serial: 1884
- Measurement SW: DASY52, Version 52.10 (4); SEMCAD X Version 14.6.14 (7483)

Area Scan (141x121x1): Interpolated grid: dx=1.000 mm, dy=1.000 mm
Maximum value of SAR (interpolated) = 1.32 W/kg

Zoom Scan (7x7x7)/Cube 0: Measurement grid: dx=4mm, dy=4mm, dz=1.4mm
Reference Value = 16.02 V/m; Power Drift = 0.00 dB
Peak SAR (extrapolated) = 2.18 W/kg
SAR(1 g) = 0.677 W/kg; SAR(10 g) = 0.231 W/kg
Smallest distance from peaks to all points 3 dB below = 9.1 mm
Ratio of SAR at M2 to SAR at M1 = 69.4%
Maximum value of SAR (measured) = 1.49 W/kg

Zoom Scan (7x7x7)/Cube 1: Measurement grid: dx=4mm, dy=4mm, dz=1.4mm
Reference Value = 16.02 V/m; Power Drift = 0.00 dB
Peak SAR (extrapolated) = 1.14 W/kg
SAR(1 g) = 0.255 W/kg; SAR(10 g) = 0.111 W/kg
Smallest distance from peaks to all points 3 dB below = 9.7 mm
Ratio of SAR at M2 to SAR at M1 = 66.8%
Maximum value of SAR (measured) = 0.733 W/kg

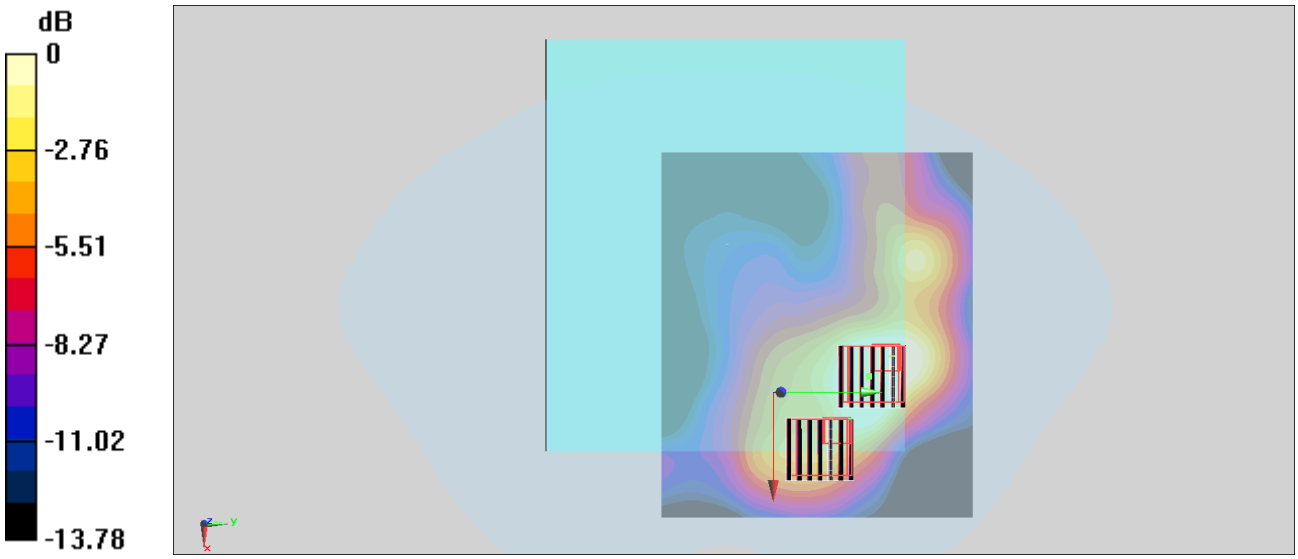

0 dB = 0.733 W/kg = -1.35 dBW/kg

#72_WLAN5GHz_802.11ac-VHT80 MCS0_Back_10mm_Ch155;Ant 3+4

Communication System: 802.11ac; Frequency: 5775 MHz;Duty Cycle: 1:1.070
Medium: HSL_5750_230108 Medium parameters used: f = 5775 MHz; σ = 5.045 S/m; ε_r = 35.361; ρ = 1000 kg/m^3
Ambient Temperature：23.5 ℃; Liquid Temperature：22.5 ℃

DASY5 Configuration:
- Probe: EX3DV4 - SN3642; ConvF(4.33, 4.33, 4.33) @ 5775 MHz; Calibrated: 2022/4/28
- Sensor-Surface: 1.4mm (Mechanical Surface Detection)
- Electronics: DAE4 Sn854; Calibrated: 2022/8/24
- Phantom: SAM_Left; Type: QD000P40CD; Serial: 1884
- Measurement SW: DASY52, Version 52.10 (4);SEMCAD X Version 14.6.14 (7483)

Area Scan (141x121x1): Interpolated grid: dx=1.000 mm, dy=1.000 mm
Maximum value of SAR (interpolated) = 1.11 W/kg

Zoom Scan (7x7x7)/Cube 0: Measurement grid: dx=4mm, dy=4mm, dz=1.4mm
Reference Value = 16.73 V/m; Power Drift = 0.08 dB
Peak SAR (extrapolated) = 2.05 W/kg
SAR(1 g) = 0.520 W/kg; SAR(10 g) = 0.180 W/kg
Smallest distance from peaks to all points 3 dB below = 9.1 mm
Ratio of SAR at M2 to SAR at M1 = 61.5%
Maximum value of SAR (measured) = 1.17 W/kg

Zoom Scan (7x7x7)/Cube 1: Measurement grid: dx=4mm, dy=4mm, dz=1.4mm
Reference Value = 16.73 V/m; Power Drift = 0.08 dB
Peak SAR (extrapolated) = 0.807 W/kg
SAR(1 g) = 0.174 W/kg; SAR(10 g) = 0.071 W/kg
Smallest distance from peaks to all points 3 dB below = 11.2 mm
Ratio of SAR at M2 to SAR at M1 = 62.4%
Maximum value of SAR (measured) = 0.525 W/kg

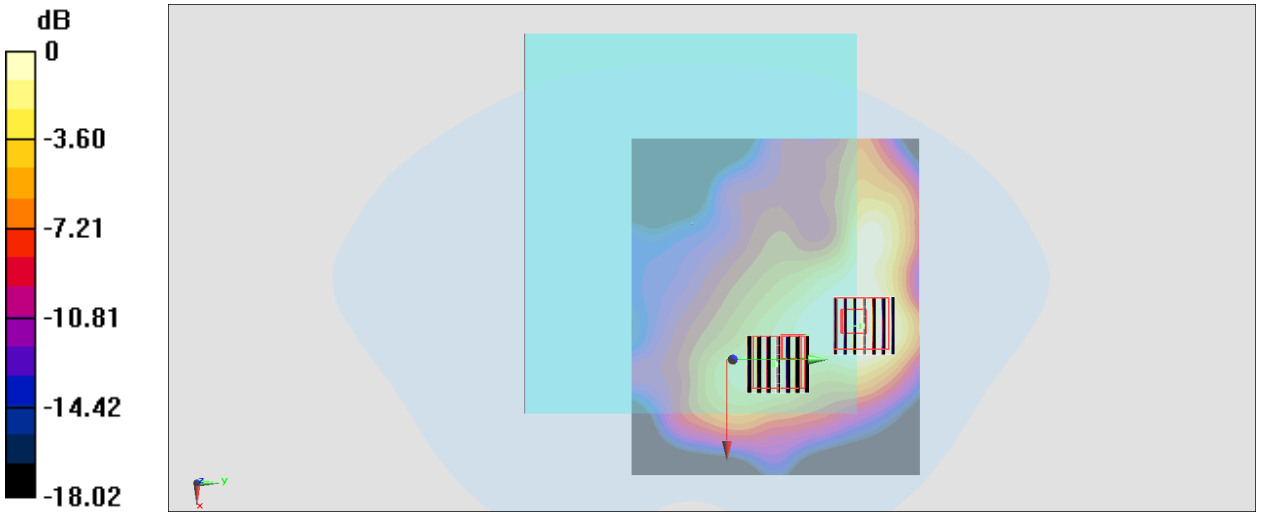

0 dB = 0.525 W/kg = -2.80 dBW/kg

#73_Bluetooth_1Mbps_Front_10mm_Ch78;Ant 3

Communication System: Bluetooth; Frequency: 2480 MHz;Duty Cycle: 1:1.295
Medium: HSL_2450_230101 Medium parameters used: f = 2480 MHz; σ = 1.855 S/m; ε_r = 38.83; ρ = 1000 kg/m^3
Ambient Temperature：23.5 ℃; Liquid Temperature：22.5 ℃

DASY5 Configuration:
- Probe: EX3DV4 - SN3642; ConvF(7.55, 7.55, 7.55) @ 2480 MHz; Calibrated: 2022/4/28
- Sensor-Surface: 1.4mm (Mechanical Surface Detection)
- Electronics: DAE4 Sn854; Calibrated: 2022/8/24
- Phantom: SAM_Left; Type: QD000P40CD; Serial: 1884
- Measurement SW: DASY52, Version 52.10 (4);SEMCAD X Version 14.6.14 (7483)

Area Scan (61x61x1): Interpolated grid: dx=1.200 mm, dy=1.200 mm
Maximum value of SAR (interpolated) = 0.731 W/kg

Zoom Scan (7x7x7)/Cube 0: Measurement grid: dx=5mm, dy=5mm, dz=5mm
Reference Value = 20.26 V/m; Power Drift = 0.02 dB
Peak SAR (extrapolated) = 0.950 W/kg
SAR(1 g) = 0.481 W/kg; SAR(10 g) = 0.225 W/kg
Smallest distance from peaks to all points 3 dB below = 7.1 mm
Ratio of SAR at M2 to SAR at M1 = 54.3%
Maximum value of SAR (measured) = 0.760 W/kg

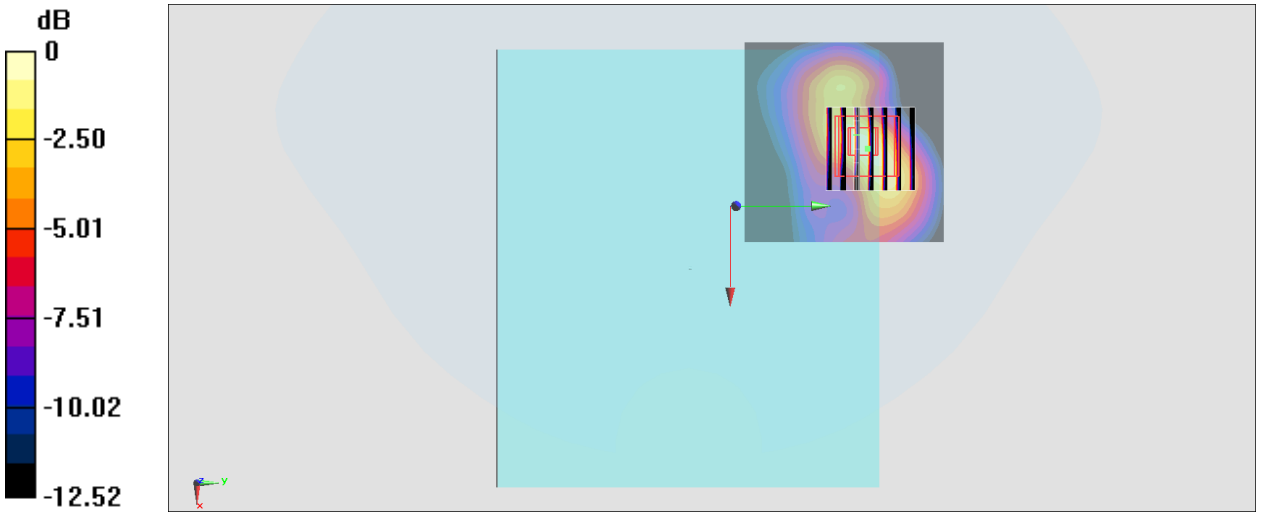

0 dB = 0.760 W/kg = -1.19 dBW/kg

#74_GSM850 Ant 0_GPRS (4 Tx slots)_Back_10mm_Ch128

Communication System: GSM850; Frequency: 824.2 MHz;Duty Cycle: 1:2.08
Medium: HSL_835_230125 Medium parameters used : f = 824.2 MHz; σ = 0.919 S/m; ε_r = 42.239; ρ = 1000 kg/m^3
Ambient Temperature：23.7 ℃; Liquid Temperature：22.7 ℃

DASY5 Configuration
- Probe: EX3DV4 - SN3925; ConvF(10.28, 10.28, 10.28) @ 824.2 MHz; Calibrated: 2022/4/29
- Sensor-Surface: 1.4mm (Mechanical Surface Detection)
- Electronics: DAE4 Sn778; Calibrated: 2022/5/30
- Phantom: SAM_Left; Type: QD000P40CD; Serial: 1719
- Measurement SW: DASY52, Version 52.10 (4); SEMCAD X Version 14.6.14 (7483)

Area Scan (81x81x1): Interpolated grid: dx=1.500 mm, dy=1.500 mm
Maximum value of SAR (interpolated) = 0.636 W/kg

Zoom Scan (5x5x7)/Cube 0: Measurement grid: dx=8mm, dy=8mm, dz=5mm
Reference Value = 26.72 V/m; Power Drift = -0.06 dB
Peak SAR (extrapolated) = 0.695 W/kg
SAR(1 g) = 0.506 W/kg; SAR(10 g) = 0.357 W/kg
Smallest distance from peaks to all points 3 dB below = 19.2 mm
Ratio of SAR at M2 to SAR at M1 = 72.1%
Maximum value of SAR (measured) = 0.632 W/kg

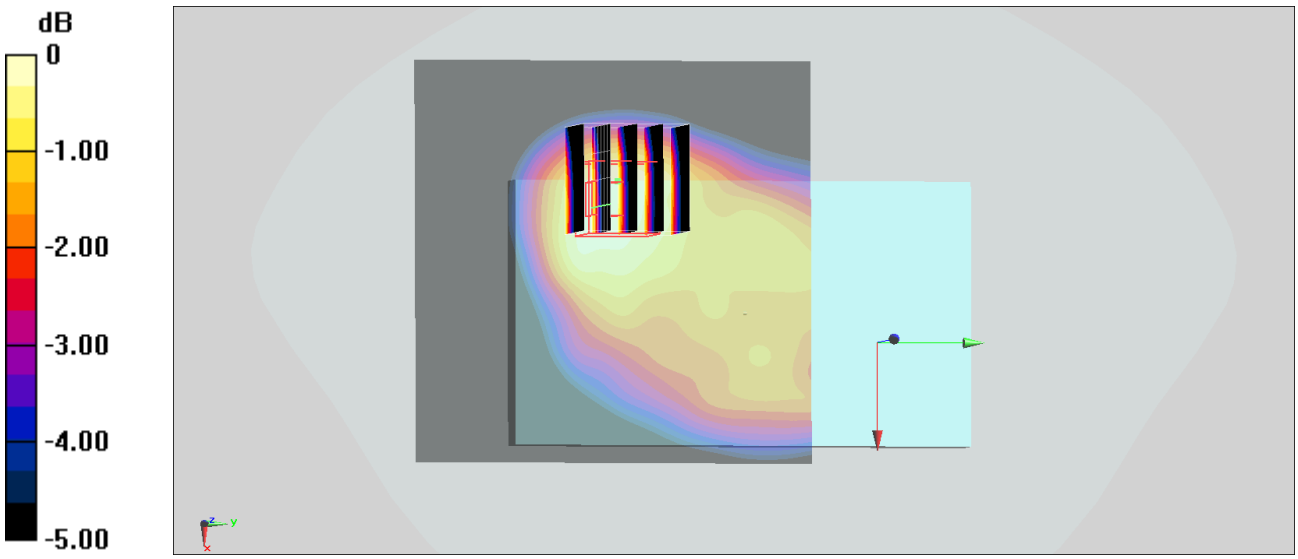

0 dB = 0.632 W/kg = -1.99 dBW/kg

#75_GSM1900 Ant 2_GPRS (4 Tx slots)_Front_10mm_Ch512

Communication System: PCS; Frequency: 1850.2 MHz;Duty Cycle: 1:2.08
Medium: HSL_1900_230126 Medium parameters used : f = 1850.2 MHz; σ = 1.365 S/m; ε_r = 39.982; ρ = 1000 kg/m^3
Ambient Temperature：23.8 ℃; Liquid Temperature：22.8 ℃

DASY5 Configuration
- Probe: EX3DV4 - SN3925; ConvF(8.7, 8.7, 8.7) @ 1850.2 MHz; Calibrated: 2022/4/29
- Sensor-Surface: 1.4mm (Mechanical Surface Detection)
- Electronics: DAE4 Sn778; Calibrated: 2022/5/30
- Phantom: SAM_Left; Type: QD000P40CD; Serial: 1719
- Measurement SW: DASY52, Version 52.10 (4); SEMCAD X Version 14.6.14 (7483)

Area Scan (71x61x1): Interpolated grid: dx=1.500 mm, dy=1.500 mm
Maximum value of SAR (interpolated) = 1.34 W/kg

Zoom Scan (5x5x7)/Cube 0: Measurement grid: dx=8mm, dy=8mm, dz=5mm
Reference Value = 24.65 V/m; Power Drift = -0.01 dB
Peak SAR (extrapolated) = 1.69 W/kg
SAR(1 g) = 0.948 W/kg; SAR(10 g) = 0.507 W/kg
Smallest distance from peaks to all points 3 dB below = 10.1 mm
Ratio of SAR at M2 to SAR at M1 = 56.9%
Maximum value of SAR (measured) = 1.53 W/kg

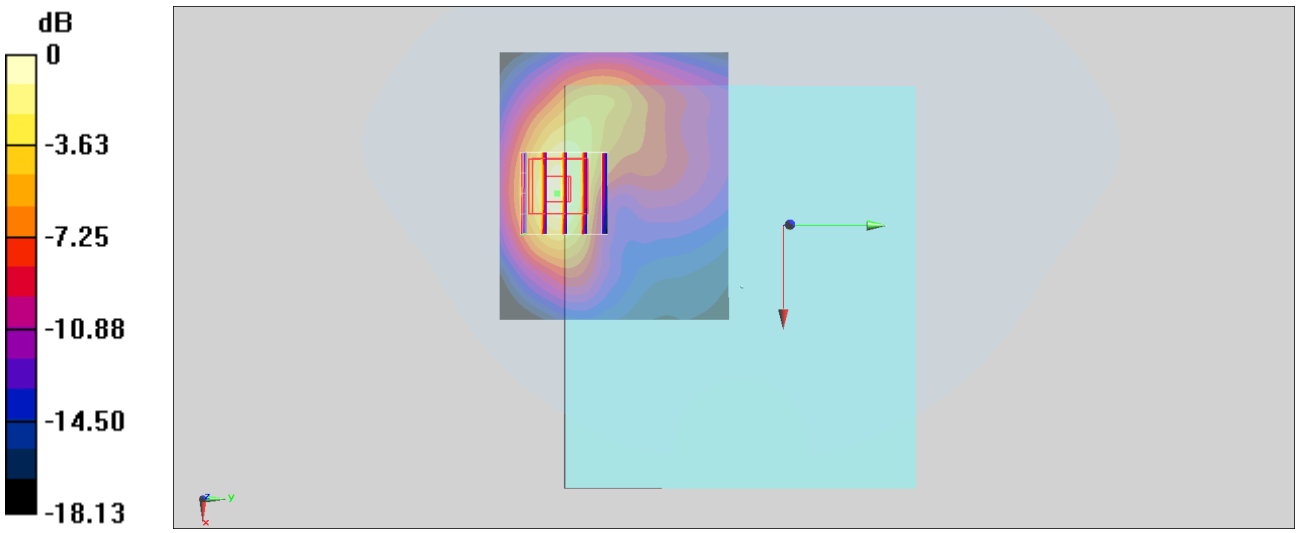

0 dB = 1.53 W/kg = 1.85 dBW/kg

#76_WCDMA II Ant 2_RMC 12.2Kbps_Front_10mm_Ch9262

Communication System: WCDMA; Frequency: 1852.4 MHz;Duty Cycle: 1:1
Medium: HSL_1900_230117 Medium parameters used : f = 1852.4 MHz; σ = 1.377 S/m; ε_r = 40.063; ρ = 1000 kg/m^3
Ambient Temperature：23.5 ℃; Liquid Temperature：22.5 ℃

DASY5 Configuration
- Probe: EX3DV4 - SN3925; ConvF(8.7, 8.7, 8.7) @ 1852.4 MHz; Calibrated: 2022/4/29
- Sensor-Surface: 1.4mm (Mechanical Surface Detection)
- Electronics: DAE4 Sn778; Calibrated: 2022/5/30
- Phantom: SAM_Left; Type: QD000P40CD; Serial: 1719
- Measurement SW: DASY52, Version 52.10 (4); SEMCAD X Version 14.6.14 (7483)

Area Scan (71x61x1): Interpolated grid: dx=1.500 mm, dy=1.500 mm
Maximum value of SAR (interpolated) = 1.26 W/kg

Zoom Scan (5x5x7)/Cube 0: Measurement grid: dx=8mm, dy=8mm, dz=5mm
Reference Value = 26.04 V/m; Power Drift = -0.01 dB
Peak SAR (extrapolated) = 1.51 W/kg
SAR(1 g) = 0.845 W/kg; SAR(10 g) = 0.451 W/kg
Smallest distance from peaks to all points 3 dB below = 9.6 mm
Ratio of SAR at M2 to SAR at M1 = 57.4%
Maximum value of SAR (measured) = 1.24 W/kg

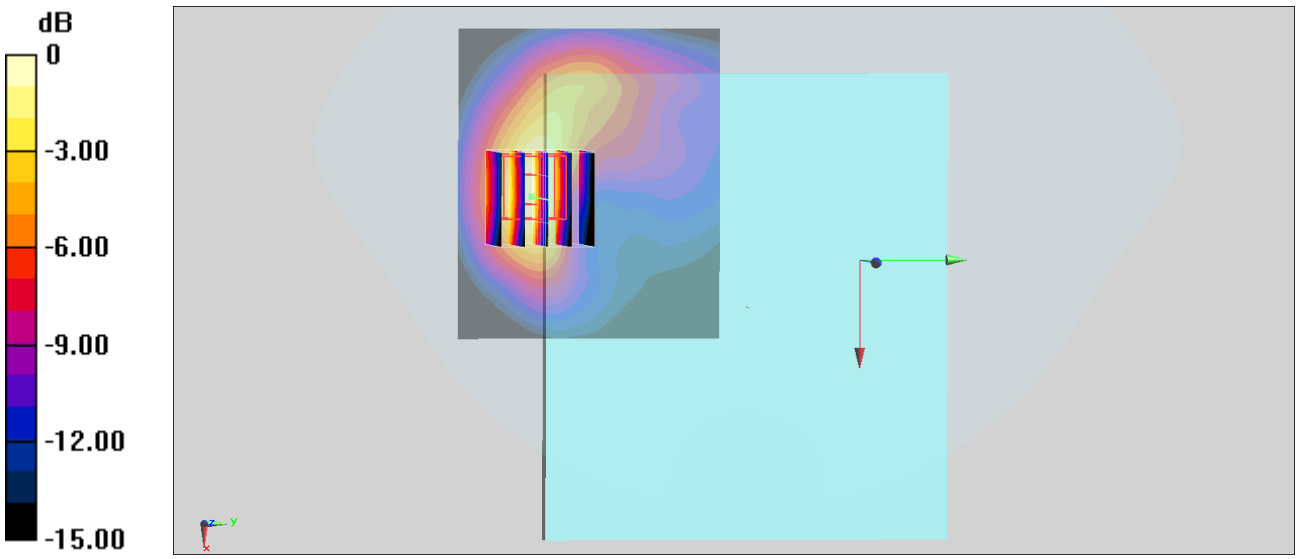

0 dB = 1.24 W/kg = 0.93 dBW/kg

#77_WCDMA IV Ant 2_RMC 12.2Kbps_Back_10mm_Ch1413

Communication System: WCDMA; Frequency: 1732.6 MHz;Duty Cycle: 1:1
Medium: HSL_1750_230108 Medium parameters used: f = 1733 MHz; σ = 1.375 S/m; ε_r = 40.453; ρ = 1000 kg/m^3
Ambient Temperature：23.2 ℃; Liquid Temperature：22.2 ℃

DASY5 Configuration
- Probe: EX3DV4 - SN3925; ConvF(8.94, 8.94, 8.94) @ 1732.6 MHz; Calibrated: 2022/4/29
- Sensor-Surface: 1.4mm (Mechanical Surface Detection)
- Electronics: DAE4 Sn778; Calibrated: 2022/5/30
- Phantom: SAM_Left; Type: QD000P40CD; Serial: 1719
- Measurement SW: DASY52, Version 52.10 (4); SEMCAD X Version 14.6.14 (7483)

Area Scan (81x61x1): Interpolated grid: dx=1.500 mm, dy=1.500 mm
Maximum value of SAR (interpolated) = 1.35 W/kg

Zoom Scan (5x5x7)/Cube 0: Measurement grid: dx=8mm, dy=8mm, dz=5mm
Reference Value = 29.96 V/m; Power Drift = -0.14 dB
Peak SAR (extrapolated) = 1.65 W/kg
SAR(1 g) = 0.967 W/kg; SAR(10 g) = 0.532 W/kg
Smallest distance from peaks to all points 3 dB below = 9.6 mm
Ratio of SAR at M2 to SAR at M1 = 59.8%
Maximum value of SAR (measured) = 1.38 W/kg

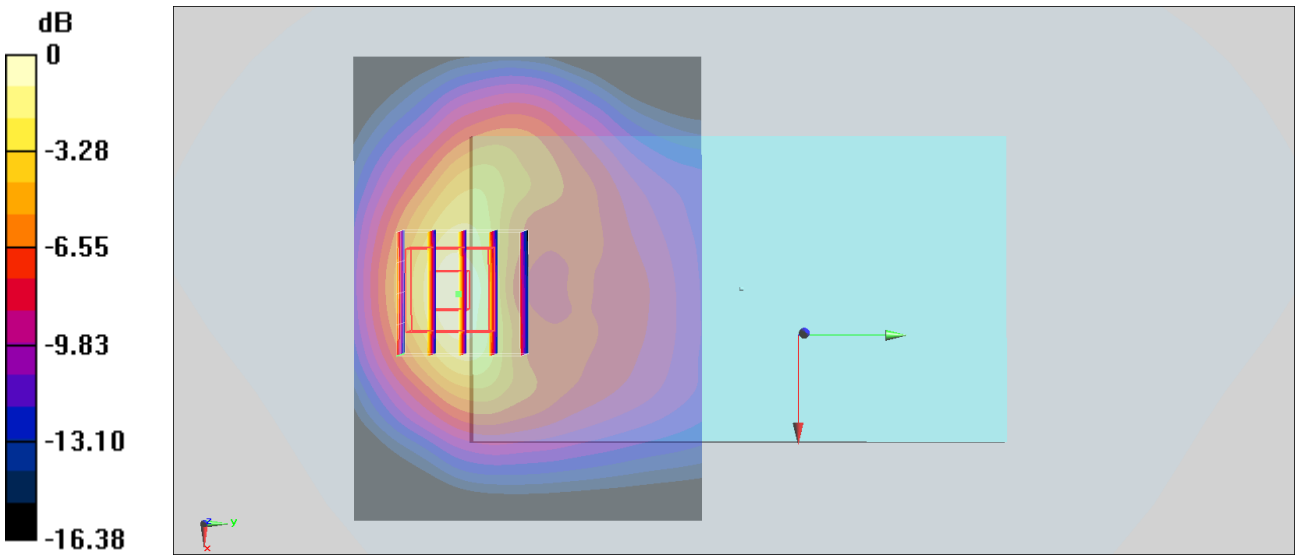

0 dB = 1.38 W/kg = 1.40 dBW/kg

Test Laboratory: Sporton International Inc. SAR/HAC Testing Lab Date: 2022/12/9

#78_WCDMA V Ant 0_RMC 12.2Kbps_Front_10mm_Ch4132

Communication System: WCDMA; Frequency: 826.4 MHz;Duty Cycle: 1:1
Medium: HSL_850_221209 Medium parameters used : f = 826.4 MHz; σ = 0.918 S/m; ε_r = 42.69; ρ = 1000 kg/m^3
Ambient Temperature：23.5 ℃; Liquid Temperature：22.5 ℃

DASY5 Configuration:
- Probe: EX3DV4 - SN3925; ConvF(10.28, 10.28, 10.28) @ 826.4 MHz; Calibrated: 2022/4/29
- Sensor-Surface: 1.4mm (Mechanical Surface Detection)
- Electronics: DAE4 Sn778; Calibrated: 2022/5/30
- Phantom: SAM_Left; Type: QD000P40CD; Serial: 1719
- Measurement SW: DASY52, Version 52.10 (4);SEMCAD X Version 14.6.14 (7483)

Area Scan (71x71x1): Interpolated grid: dx=1.500 mm, dy=1.500 mm
Maximum value of SAR (interpolated) = 0.617 W/kg

Zoom Scan (5x5x7)/Cube 0: Measurement grid: dx=8mm, dy=8mm, dz=5mm
Reference Value = 23.69 V/m; Power Drift = -0.14 dB
Peak SAR (extrapolated) = 0.670 W/kg
SAR(1 g) = 0.447 W/kg; SAR(10 g) = 0.291 W/kg
Smallest distance from peaks to all points 3 dB below = 18.2 mm
Ratio of SAR at M2 to SAR at M1 = 66.9%
Maximum value of SAR (measured) = 0.589 W/kg

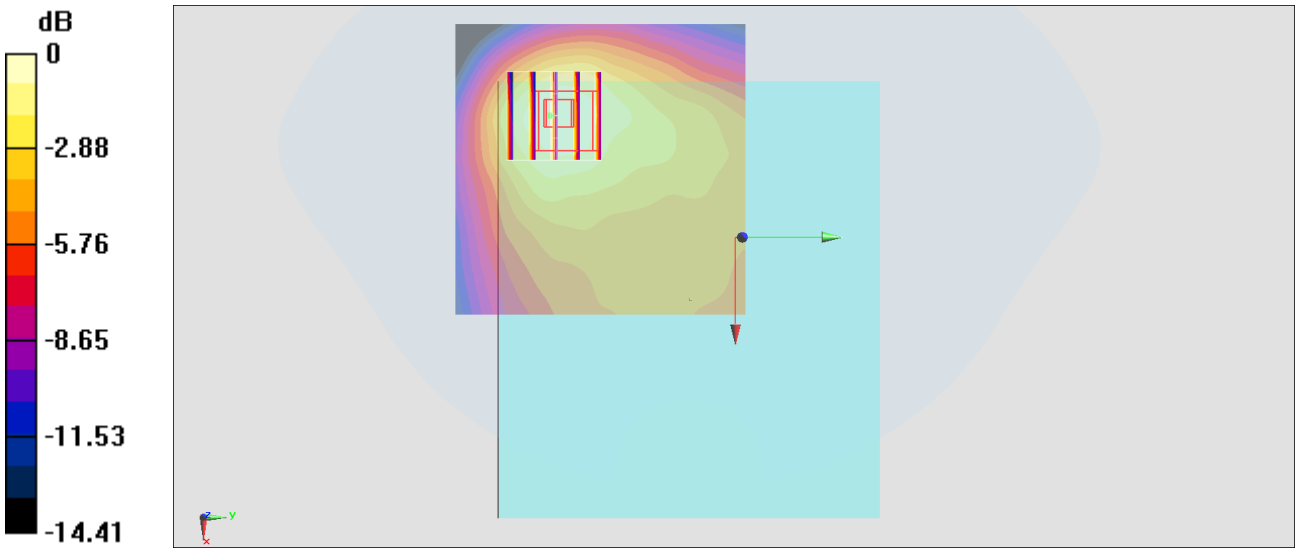

0 dB = 0.589 W/kg = -2.30 dBW/kg

#79_LTE Band 2 Ant 5_20M_QPSK_1_0_Back_10mm_Ch19100

Communication System: LTE; Frequency: 1900 MHz;Duty Cycle: 1:1
Medium: HSL_1900_230109 Medium parameters used: f = 1900 MHz; σ = 1.4 S/m; ε_r = 39.741; ρ = 1000 kg/m^3
Ambient Temperature：23.4 ℃; Liquid Temperature：22.4 ℃

DASY5 Configuration
- Probe: EX3DV4 - SN3925; ConvF(8.7, 8.7, 8.7) @ 1900 MHz; Calibrated: 2022/4/29
- Sensor-Surface: 1.4mm (Mechanical Surface Detection)
- Electronics: DAE4 Sn778; Calibrated: 2022/5/30
- Phantom: SAM_Left; Type: QD000P40CD; Serial: 1719
- Measurement SW: DASY52, Version 52.10 (4); SEMCAD X Version 14.6.14 (7483)

Area Scan (61x61x1): Interpolated grid: dx=1.500 mm, dy=1.500 mm
Maximum value of SAR (interpolated) = 1.39 W/kg

Zoom Scan (5x5x7)/Cube 0: Measurement grid: dx=8mm, dy=8mm, dz=5mm
Reference Value = 32.09 V/m; Power Drift = -0.01 dB
Peak SAR (extrapolated) = 1.92 W/kg
SAR(1 g) = 0.922 W/kg; SAR(10 g) = 0.417 W/kg
Smallest distance from peaks to all points 3 dB below = 7.2 mm
Ratio of SAR at M2 to SAR at M1 = 48.6%
Maximum value of SAR (measured) = 1.51 W/kg

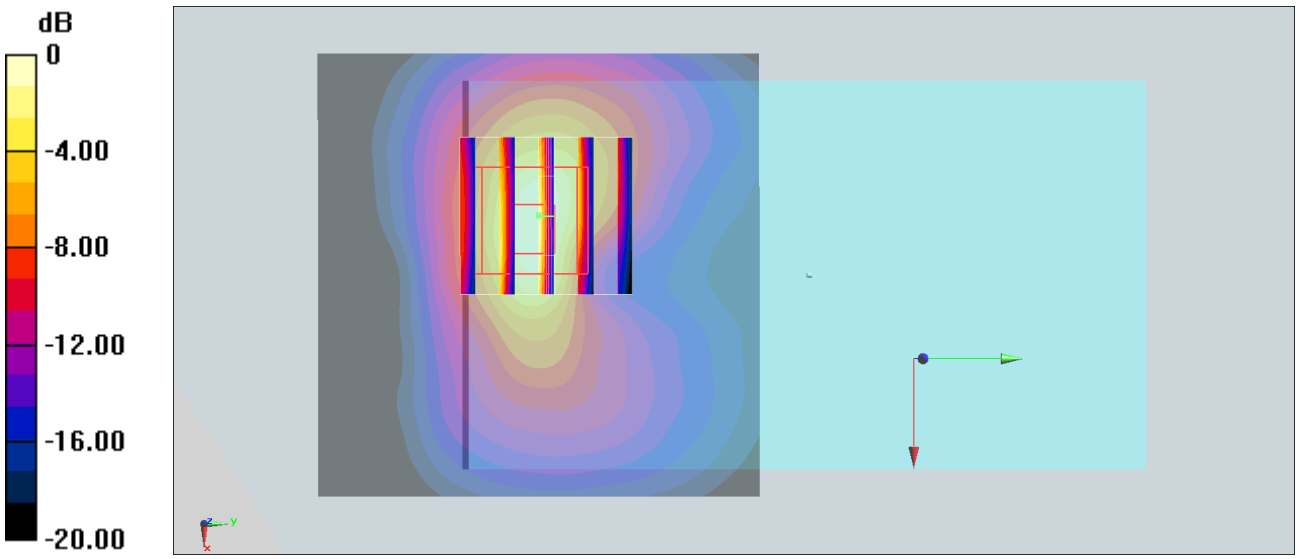

0 dB = 1.51 W/kg = 1.79 dBW/kg

#80_LTE Band 7 Ant 2_20M_QPSK_1_0_Back_10mm_Ch21350

Communication System: LTE; Frequency: 2560 MHz;Duty Cycle: 1:1
Medium: HSL_2600_230106 Medium parameters used: f = 2560 MHz; σ = 1.962 S/m; ε_r = 38.365; ρ = 1000 kg/m^3
Ambient Temperature：23.6 ℃; Liquid Temperature：22.6 ℃

DASY5 Configuration
- Probe: EX3DV4 - SN3925; ConvF(7.96, 7.96, 7.96) @ 2560 MHz; Calibrated: 2022/4/29
- Sensor-Surface: 1.4mm (Mechanical Surface Detection)
- Electronics: DAE4 Sn778; Calibrated: 2022/5/30
- Phantom: SAM_Left; Type: QD000P40CD; Serial: 1719
- Measurement SW: DASY52, Version 52.10 (4); SEMCAD X Version 14.6.14 (7483)

Area Scan (101x91x1): Interpolated grid: dx=1.200 mm, dy=1.200 mm
Maximum value of SAR (interpolated) = 1.55 W/kg

Zoom Scan (7x7x7)/Cube 0: Measurement grid: dx=5mm, dy=5mm, dz=5mm
Reference Value = 25.98 V/m; Power Drift = -0.03 dB
Peak SAR (extrapolated) = 1.78 W/kg
SAR(1 g) = 0.947 W/kg; SAR(10 g) = 0.470 W/kg
Smallest distance from peaks to all points 3 dB below = 9.1 mm
Ratio of SAR at M2 to SAR at M1 = 53.9%
Maximum value of SAR (measured) = 1.46 W/kg

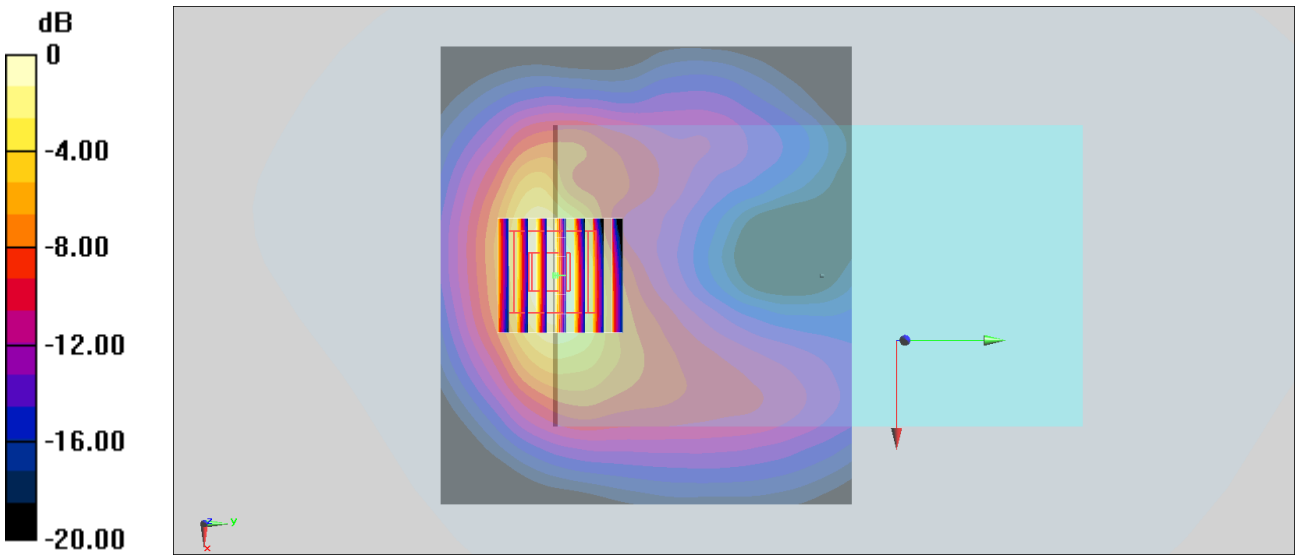

0 dB = 1.46 W/kg = 1.64 dBW/kg

Test Laboratory: Sporton International Inc. SAR/HAC Testing Lab Date: 2022/12/8

#81_LTE Band 12 Ant 0_10M_QPSK_1_0_Front_10mm_Ch23095

Communication System: LTE; Frequency: 707.5 MHz;Duty Cycle: 1:1
Medium: HSL_750_221208 Medium parameters used : f = 707.5 MHz; σ = 0.878 S/m; ε_r = 43.211; ρ = 1000 kg/m^3
Ambient Temperature：23.5 ℃; Liquid Temperature：22.5 ℃

DASY5 Configuration:
- Probe: EX3DV4 - SN3925; ConvF(10.46, 10.46, 10.46) @ 707.5 MHz; Calibrated: 2022/4/29
- Sensor-Surface: 1.4mm (Mechanical Surface Detection)
- Electronics: DAE4 Sn778; Calibrated: 2022/5/30
- Phantom: SAM_Left; Type: QD000P40CD; Serial: 1719
- Measurement SW: DASY52, Version 52.10 (4);SEMCAD X Version 14.6.14 (7483)

Area Scan (71x71x1): Interpolated grid: dx=1.500 mm, dy=1.500 mm
Maximum value of SAR (interpolated) = 0.688 W/kg

Zoom Scan (5x5x7)/Cube 0: Measurement grid: dx=8mm, dy=8mm, dz=5mm
Reference Value = 26.43 V/m; Power Drift = -0.10 dB
Peak SAR (extrapolated) = 0.775 W/kg
SAR(1 g) = 0.512 W/kg; SAR(10 g) = 0.342 W/kg
Smallest distance from peaks to all points 3 dB below = 20.9 mm
Ratio of SAR at M2 to SAR at M1 = 63.2%
Maximum value of SAR (measured) = 0.662 W/kg

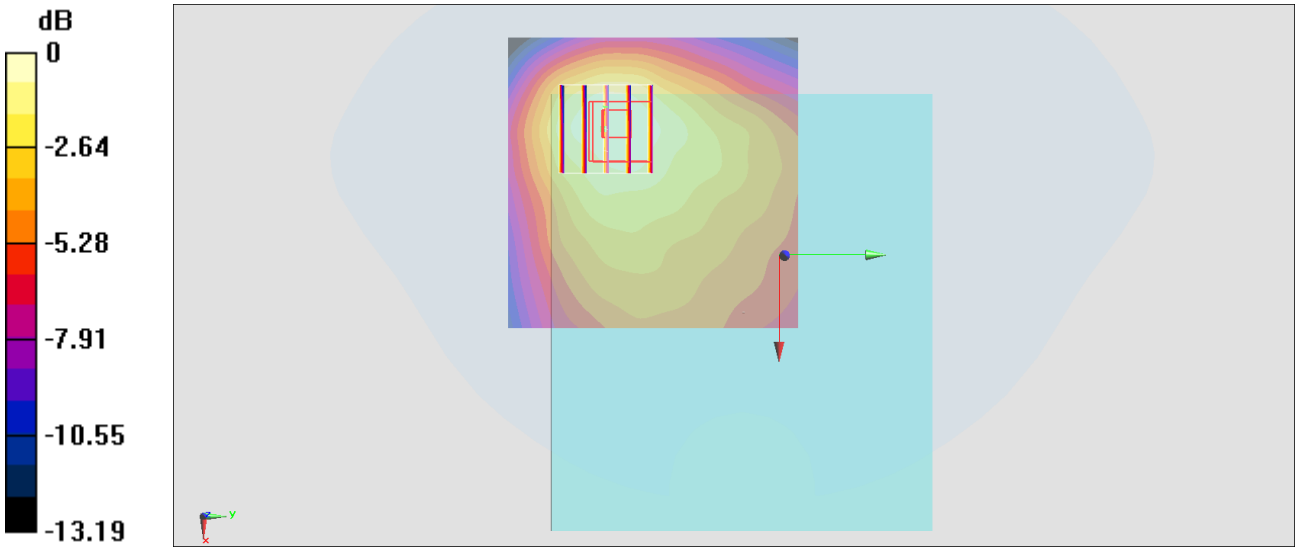

0 dB = 0.662 W/kg = -1.79 dBW/kg

Test Laboratory: Sporton International Inc. SAR/HAC Testing Lab Date: 2022/12/8

#82_LTE Band 13 Ant 0_10M_QPSK_1_0_Front_10mm_Ch23230

Communication System: LTE; Frequency: 782 MHz;Duty Cycle: 1:1
Medium: HSL_750_221208 Medium parameters used: f = 782 MHz; σ = 0.901 S/m; ε_r = 42.915; ρ = 1000 kg/m^3
Ambient Temperature：23.5 ℃; Liquid Temperature：22.5 ℃

DASY5 Configuration:
- Probe: EX3DV4 - SN3925; ConvF(10.46, 10.46, 10.46) @ 782 MHz; Calibrated: 2022/4/29
- Sensor-Surface: 1.4mm (Mechanical Surface Detection)
- Electronics: DAE4 Sn778; Calibrated: 2022/5/30
- Phantom: SAM_Left; Type: QD000P40CD; Serial: 1719
- Measurement SW: DASY52, Version 52.10 (4);SEMCAD X Version 14.6.14 (7483)

Area Scan (71x71x1): Interpolated grid: dx=1.500 mm, dy=1.500 mm
Maximum value of SAR (interpolated) = 0.663 W/kg

Zoom Scan (5x5x7)/Cube 0: Measurement grid: dx=8mm, dy=8mm, dz=5mm
Reference Value = 25.33 V/m; Power Drift = -0.17 dB
Peak SAR (extrapolated) = 0.677 W/kg
SAR(1 g) = 0.473 W/kg; SAR(10 g) = 0.324 W/kg
Smallest distance from peaks to all points 3 dB below = 20.4 mm
Ratio of SAR at M2 to SAR at M1 = 69.6%
Maximum value of SAR (measured) = 0.603 W/kg

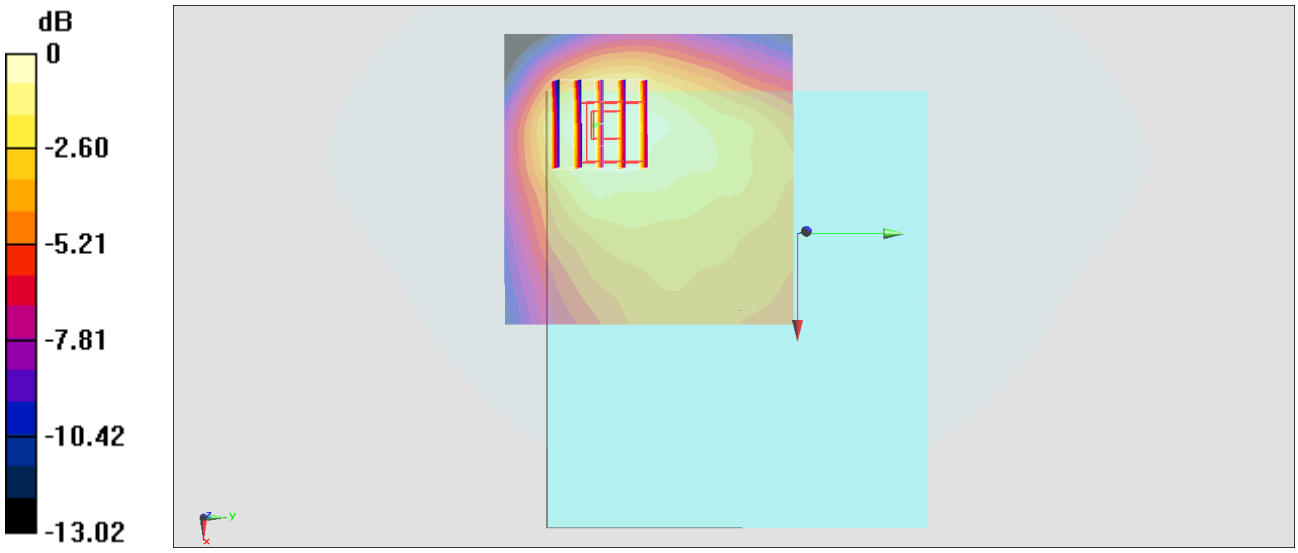

0 dB = 0.603 W/kg = -2.20 dBW/kg

Test Laboratory: Sporton International Inc. SAR/HAC Testing Lab Date: 2022/12/8

#83_LTE Band 14 Ant 0_10M_QPSK_1_0_Front_10mm_Ch23330

Communication System: LTE; Frequency: 793 MHz;Duty Cycle: 1:1
Medium: HSL_750_221208 Medium parameters used: f = 793 MHz; σ = 0.905 S/m; ε_r = 42.527; ρ = 1000 kg/m^3
Ambient Temperature：23.5 ℃; Liquid Temperature：22.5 ℃

DASY5 Configuration:
- Probe: EX3DV4 - SN3925; ConvF(10.46, 10.46, 10.46) @ 793 MHz; Calibrated: 2022/4/29
- Sensor-Surface: 1.4mm (Mechanical Surface Detection)
- Electronics: DAE4 Sn778; Calibrated: 2022/5/30
- Phantom: SAM_Left; Type: QD000P40CD; Serial: 1719
- Measurement SW: DASY52, Version 52.10 (4);SEMCAD X Version 14.6.14 (7483)

Area Scan (71x71x1): Interpolated grid: dx=1.500 mm, dy=1.500 mm
Maximum value of SAR (interpolated) = 0.708 W/kg

Zoom Scan (5x5x7)/Cube 0: Measurement grid: dx=8mm, dy=8mm, dz=5mm
Reference Value = 25.71 V/m; Power Drift = -0.00 dB
Peak SAR (extrapolated) = 0.736 W/kg
SAR(1 g) = 0.511 W/kg; SAR(10 g) = 0.348 W/kg
Smallest distance from peaks to all points 3 dB below = 17 mm
Ratio of SAR at M2 to SAR at M1 = 69.9%
Maximum value of SAR (measured) = 0.657 W/kg

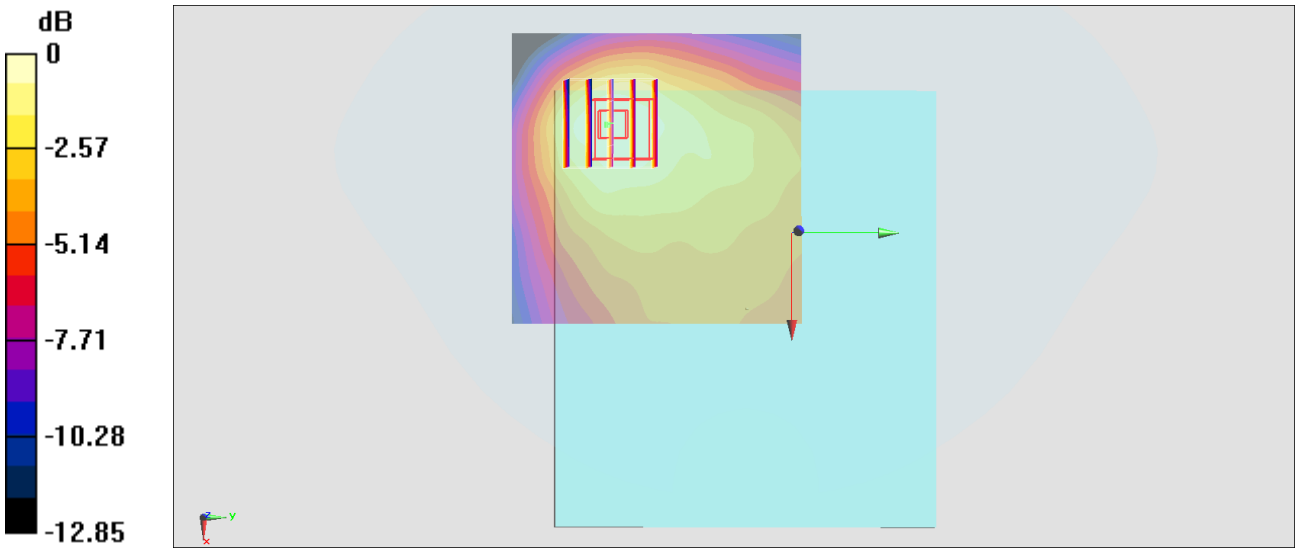

0 dB = 0.657 W/kg = -1.82 dBW/kg

#84_LTE Band 25 Ant 2_20M_QPSK_1_0_Back_10mm_Ch26140

Communication System: LTE; Frequency: 1860 MHz;Duty Cycle: 1:1
Medium: HSL_1900_230107 Medium parameters used: f = 1860 MHz; σ = 1.371 S/m; ε_r = 39.784; ρ = 1000 kg/m^3
Ambient Temperature：23.7 ℃; Liquid Temperature：22.7 ℃

DASY5 Configuration
- Probe: EX3DV4 - SN3925; ConvF(8.7, 8.7, 8.7) @ 1860 MHz; Calibrated: 2022/4/29
- Sensor-Surface: 1.4mm (Mechanical Surface Detection)
- Electronics: DAE4 Sn778; Calibrated: 2022/5/30
- Phantom: SAM_Left; Type: QD000P40CD; Serial: 1719
- Measurement SW: DASY52, Version 52.10 (4); SEMCAD X Version 14.6.14 (7483)

Area Scan (81x51x1): Interpolated grid: dx=1.500 mm, dy=1.500 mm
Maximum value of SAR (interpolated) = 1.32 W/kg

Zoom Scan (5x5x7)/Cube 0: Measurement grid: dx=8mm, dy=8mm, dz=5mm
Reference Value = 28.99 V/m; Power Drift = -0.02 dB
Peak SAR (extrapolated) = 1.54 W/kg
SAR(1 g) = 0.895 W/kg; SAR(10 g) = 0.489 W/kg
Smallest distance from peaks to all points 3 dB below = 11.2 mm
Ratio of SAR at M2 to SAR at M1 = 58.5%
Maximum value of SAR (measured) = 1.27 W/kg

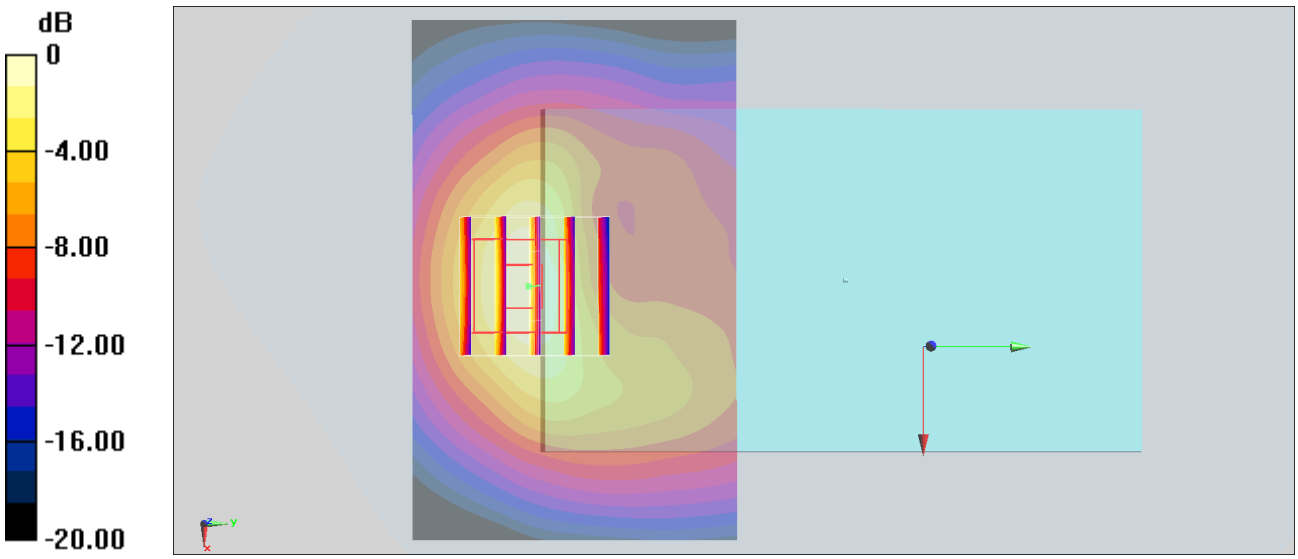

0 dB = 1.27 W/kg = 1.04 dBW/kg

Test Laboratory: Sporton International Inc. SAR/HAC Testing Lab Date: 2022/12/9

#85_LTE Band 26 Ant 0_15M_QPSK_1_0_Front_10mm_Ch26865

Communication System: LTE; Frequency: 831.5 MHz;Duty Cycle: 1:1
Medium: HSL_850_221209 Medium parameters used : f = 831.5 MHz; σ = 0.923 S/m; ε_r = 42.581; ρ = 1000 kg/m^3
Ambient Temperature：23.5 ℃; Liquid Temperature：22.5 ℃

DASY5 Configuration:
- Probe: EX3DV4 - SN3925; ConvF(10.28, 10.28, 10.28) @ 831.5 MHz; Calibrated: 2022/4/29
- Sensor-Surface: 1.4mm (Mechanical Surface Detection)
- Electronics: DAE4 Sn778; Calibrated: 2022/5/30
- Phantom: SAM_Left; Type: QD000P40CD; Serial: 1719
- Measurement SW: DASY52, Version 52.10 (4);SEMCAD X Version 14.6.14 (7483)

Area Scan (71x71x1): Interpolated grid: dx=1.500 mm, dy=1.500 mm
Maximum value of SAR (interpolated) = 0.765 W/kg

Zoom Scan (5x5x7)/Cube 0: Measurement grid: dx=8mm, dy=8mm, dz=5mm
Reference Value = 25.70 V/m; Power Drift = 0.01 dB
Peak SAR (extrapolated) = 0.820 W/kg
SAR(1 g) = 0.546 W/kg; SAR(10 g) = 0.359 W/kg
Smallest distance from peaks to all points 3 dB below = 17.9 mm
Ratio of SAR at M2 to SAR at M1 = 66.6%
Maximum value of SAR (measured) = 0.730 W/kg

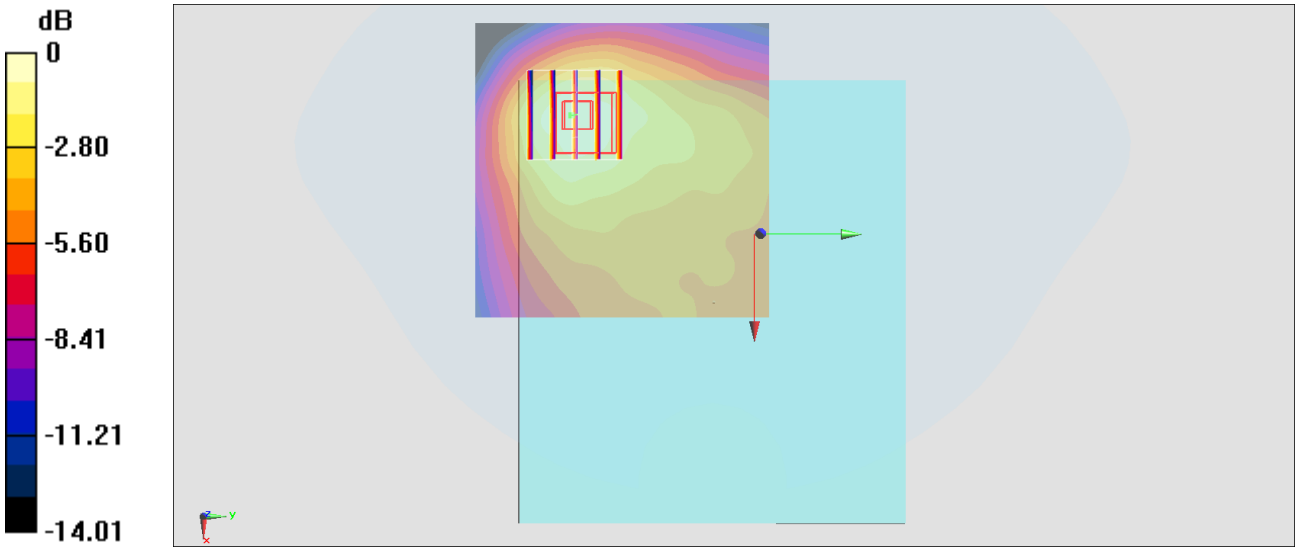

0 dB = 0.730 W/kg = -1.37 dBW/kg

#86_LTE Band 30 Ant 2_10M_QPSK_1_0_Back_10mm_Ch27710

Communication System: LTE; Frequency: 2310 MHz;Duty Cycle: 1:1
Medium: HSL_2300_230106 Medium parameters used: f = 2310 MHz; σ = 1.64 S/m; ε_r = 39.717; ρ = 1000 kg/m^3
Ambient Temperature：23.6 ℃; Liquid Temperature：22.6 ℃

DASY5 Configuration
- Probe: EX3DV4 - SN3925; ConvF(8.49, 8.49, 8.49) @ 2310 MHz; Calibrated: 2022/4/29
- Sensor-Surface: 1.4mm (Mechanical Surface Detection)
- Electronics: DAE4 Sn778; Calibrated: 2022/5/30
- Phantom: SAM_Left; Type: QD000P40CD; Serial: 1719
- Measurement SW: DASY52, Version 52.10 (4); SEMCAD X Version 14.6.14 (7483)

Area Scan (101x81x1): Interpolated grid: dx=1.200 mm, dy=1.200 mm
Maximum value of SAR (interpolated) = 1.40 W/kg

Zoom Scan (7x7x7)/Cube 0: Measurement grid: dx=5mm, dy=5mm, dz=5mm
Reference Value = 29.06 V/m; Power Drift = 0.00 dB
Peak SAR (extrapolated) = 1.65 W/kg
SAR(1 g) = 0.914 W/kg; SAR(10 g) = 0.466 W/kg
Smallest distance from peaks to all points 3 dB below = 9.5 mm
Ratio of SAR at M2 to SAR at M1 = 56.4%
Maximum value of SAR (measured) = 1.38 W/kg

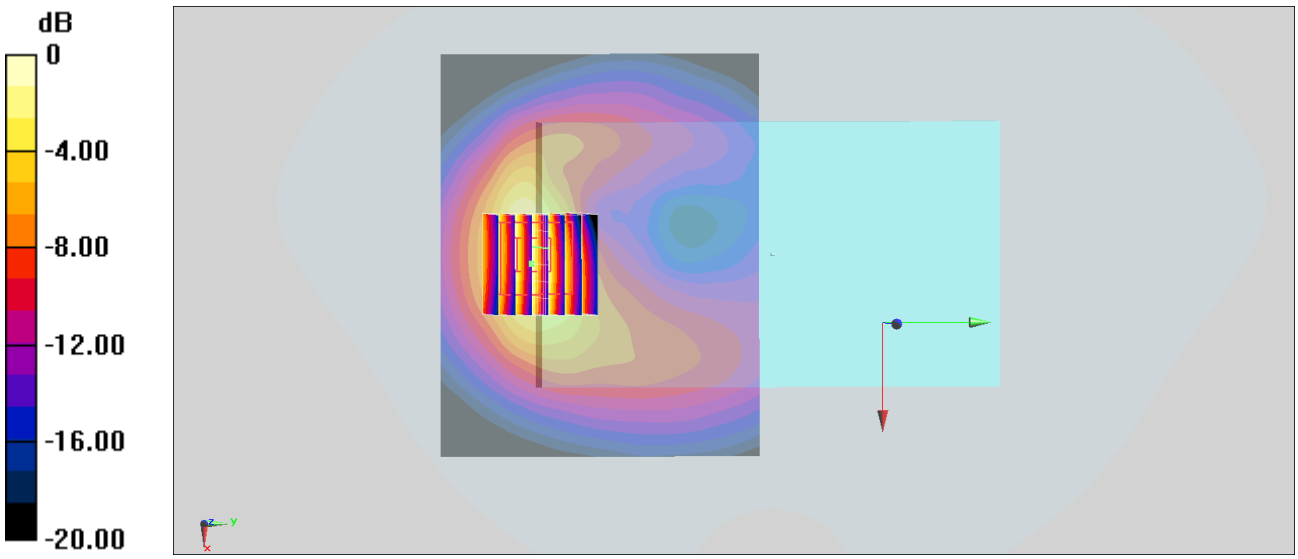

0 dB = 1.38 W/kg = 1.40 dBW/kg

#87_LTE Band 66 Ant 0_20M_QPSK_1_0_Back_10mm_Ch132572

Communication System: LTE; Frequency: 1770 MHz;Duty Cycle: 1:1
Medium: HSL_1750_230107 Medium parameters used: f = 1770 MHz; σ = 1.37 S/m; ε_r = 39.847; ρ = 1000 kg/m^3
Ambient Temperature：23.7 ℃; Liquid Temperature：22.7 ℃

DASY5 Configuration
- Probe: EX3DV4 - SN3925; ConvF(8.94, 8.94, 8.94) @ 1770 MHz; Calibrated: 2022/4/29
- Sensor-Surface: 1.4mm (Mechanical Surface Detection)
- Electronics: DAE4 Sn778; Calibrated: 2022/5/30
- Phantom: SAM_Left; Type: QD000P40CD; Serial: 1719
- Measurement SW: DASY52, Version 52.10 (4); SEMCAD X Version 14.6.14 (7483)

Area Scan (61x81x1): Interpolated grid: dx=1.500 mm, dy=1.500 mm
Maximum value of SAR (interpolated) = 1.42 W/kg

Zoom Scan (5x5x7)/Cube 0: Measurement grid: dx=8mm, dy=8mm, dz=5mm
Reference Value = 31.72 V/m; Power Drift = 0.06 dB
Peak SAR (extrapolated) = 1.55 W/kg
SAR(1 g) = 0.913 W/kg; SAR(10 g) = 0.485 W/kg
Smallest distance from peaks to all points 3 dB below = 9.6 mm
Ratio of SAR at M2 to SAR at M1 = 60%
Maximum value of SAR (measured) = 1.34 W/kg

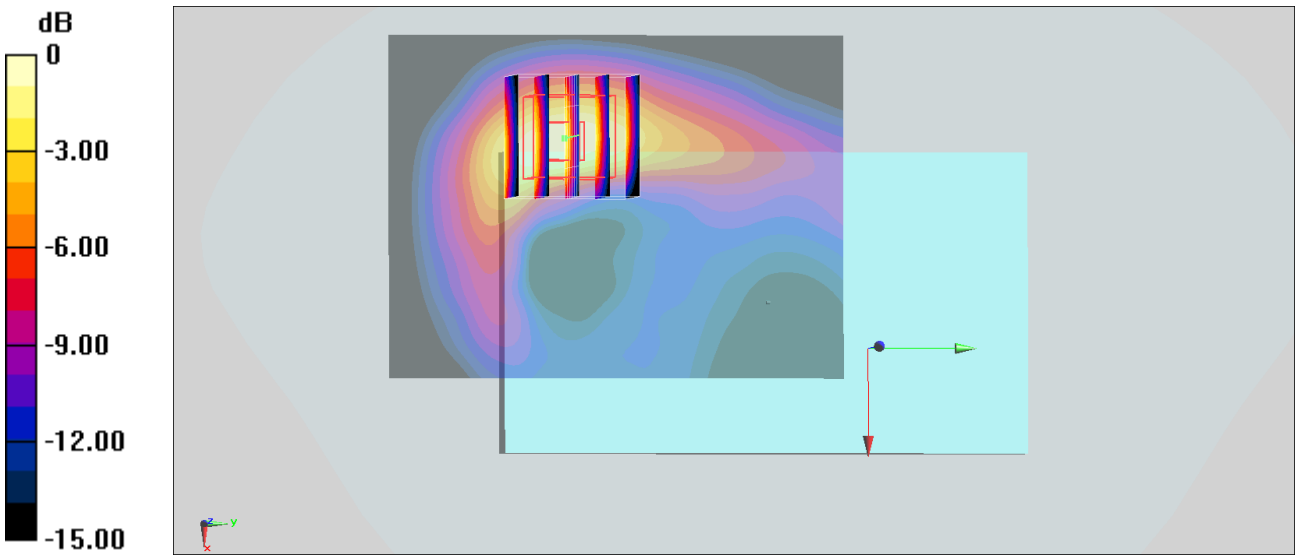

0 dB = 1.34 W/kg = 1.27 dBW/kg

Test Laboratory: Sporton International Inc. SAR/HAC Testing Lab Date: 2022/12/8

#88_LTE Band 71 Ant 0_20M_QPSK_1_0_Front_10mm_Ch133297

Communication System: LTE; Frequency: 680.5 MHz;Duty Cycle: 1:1
Medium: HSL_750_221208 Medium parameters used : f = 680.5 MHz; σ = 0.861 S/m; ε_r = 43.143; ρ = 1000 kg/m^3
Ambient Temperature：23.5 ℃; Liquid Temperature：22.5 ℃

DASY5 Configuration:
- Probe: EX3DV4 - SN3925; ConvF(10.46, 10.46, 10.46) @ 680.5 MHz; Calibrated: 2022/4/29
- Sensor-Surface: 1.4mm (Mechanical Surface Detection)
- Electronics: DAE4 Sn778; Calibrated: 2022/5/30
- Phantom: SAM_Left; Type: QD000P40CD; Serial: 1719
- Measurement SW: DASY52, Version 52.10 (4);SEMCAD X Version 14.6.14 (7483)

Area Scan (71x71x1): Interpolated grid: dx=1.500 mm, dy=1.500 mm
Maximum value of SAR (interpolated) = 0.554 W/kg

Zoom Scan (5x5x7)/Cube 0: Measurement grid: dx=8mm, dy=8mm, dz=5mm
Reference Value = 23.75 V/m; Power Drift = -0.00 dB
Peak SAR (extrapolated) = 0.636 W/kg
SAR(1 g) = 0.417 W/kg; SAR(10 g) = 0.280 W/kg
Smallest distance from peaks to all points 3 dB below = 17.3 mm
Ratio of SAR at M2 to SAR at M1 = 62.1%
Maximum value of SAR (measured) = 0.544 W/kg

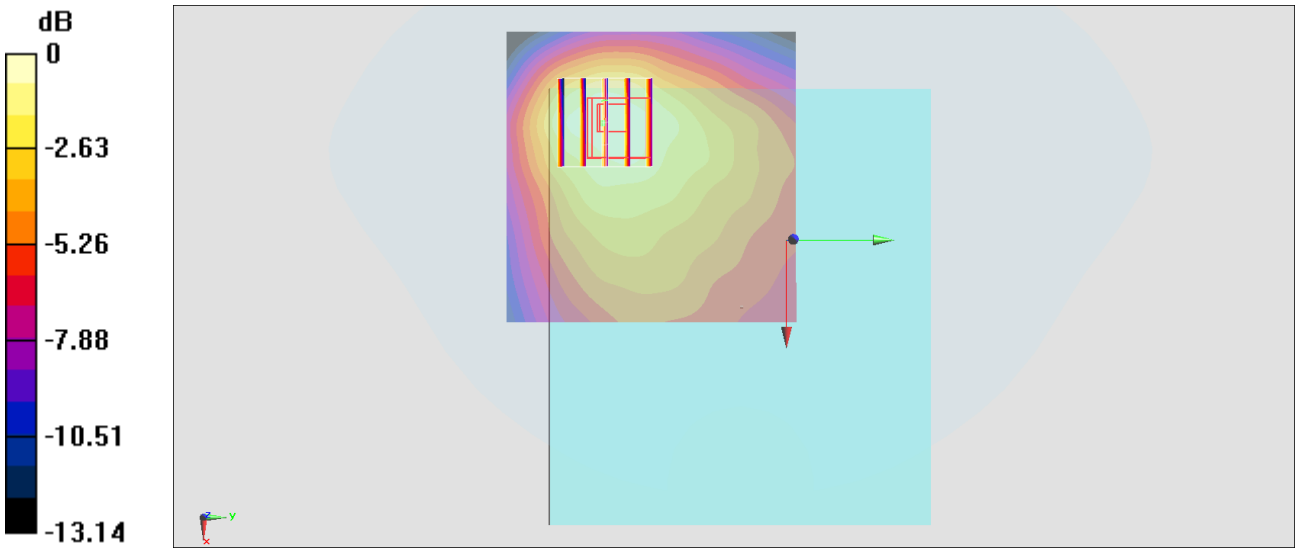

0 dB = 0.544 W/kg = -2.64 dBW/kg

#89_LTE Band 38 HPUE Ant 0_20M_QPSK_1_0_Back_10mm_Ch37850

Communication System: LTE; Frequency: 2580 MHz;Duty Cycle: 1:1.59
Medium: HSL_2600_221221 Medium parameters used: f = 2580 MHz; σ = 1.99 S/m; ε_r = 38.629; ρ = 1000 kg/m^3
Ambient Temperature：23.2 ℃; Liquid Temperature：22.2 ℃

DASY5 Configuration
- Probe: EX3DV4 - SN7692; ConvF(8.33, 8.33, 8.33) @ 2580 MHz; Calibrated: 2022/11/21
- Sensor-Surface: 1.4mm (Mechanical Surface Detection)
- Electronics: DAE4 Sn1696; Calibrated: 2022/11/9
- Phantom: Twin-SAM V5.0 (30deg probe tilt); Type: QD 000 P40 CD; Serial: 1815
- Measurement SW: DASY52, Version 52.10 (4); SEMCAD X Version 14.6.14 (7483)

Area Scan (101x131x1): Interpolated grid: dx=1.200 mm, dy=1.200 mm
Maximum value of SAR (interpolated) = 0.785 W/kg

Zoom Scan (7x7x7)/Cube 0: Measurement grid: dx=5mm, dy=5mm, dz=5mm
Reference Value = 17.67 V/m; Power Drift = -0.09 dB
Peak SAR (extrapolated) = 0.953 W/kg
SAR(1 g) = 0.433 W/kg; SAR(10 g) = 0.190 W/kg
Smallest distance from peaks to all points 3 dB below = 7.1 mm
Ratio of SAR at M2 to SAR at M1 = 46.4%
Maximum value of SAR (measured) = 0.729 W/kg

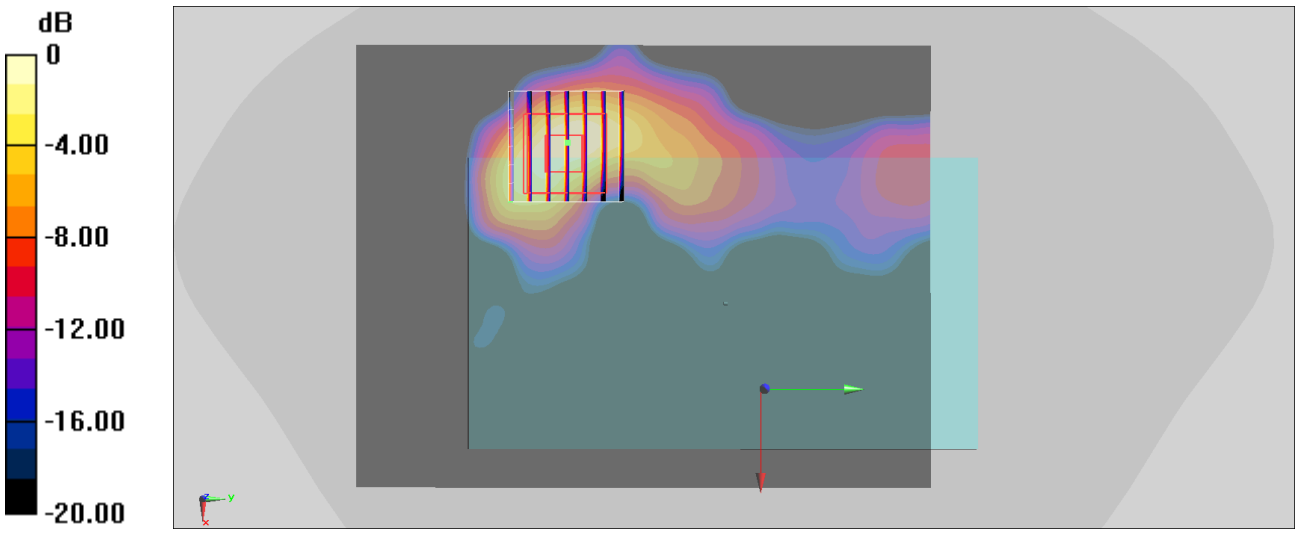

0 dB = 0.729 W/kg = -1.37 dBW/kg

#90_LTE Band 41 Ant 0_20M_QPSK_1_0_Front_10mm_Ch41490

Communication System: LTE; Frequency: 2680 MHz;Duty Cycle: 1:1.59
Medium: HSL_2600_230120 Medium parameters used: f = 2680 MHz; σ = 2.075 S/m; ε_r = 38.4; ρ = 1000 kg/m^3
Ambient Temperature：23.2 ℃; Liquid Temperature：22.2 ℃

DASY5 Configuration
- Probe: EX3DV4 - SN3925; ConvF(7.96, 7.96, 7.96) @ 2680 MHz; Calibrated: 2022/4/29
- Sensor-Surface: 1.4mm (Mechanical Surface Detection)
- Electronics: DAE4 Sn778; Calibrated: 2022/5/30
- Phantom: SAM_Left; Type: QD000P40CD; Serial: 1719
- Measurement SW: DASY52, Version 52.10 (4); SEMCAD X Version 14.6.14 (7483)

Area Scan (61x81x1): Interpolated grid: dx=1.200 mm, dy=1.200 mm
Maximum value of SAR (interpolated) = 1.50 W/kg

Zoom Scan (7x7x7)/Cube 0: Measurement grid: dx=5mm, dy=5mm, dz=5mm
Reference Value = 25.16 V/m; Power Drift = -0.16 dB
Peak SAR (extrapolated) = 1.86 W/kg
SAR(1 g) = 0.879 W/kg; SAR(10 g) = 0.397 W/kg
Smallest distance from peaks to all points 3 dB below = 6.4 mm
Ratio of SAR at M2 to SAR at M1 = 49.3%
Maximum value of SAR (measured) = 1.47 W/kg

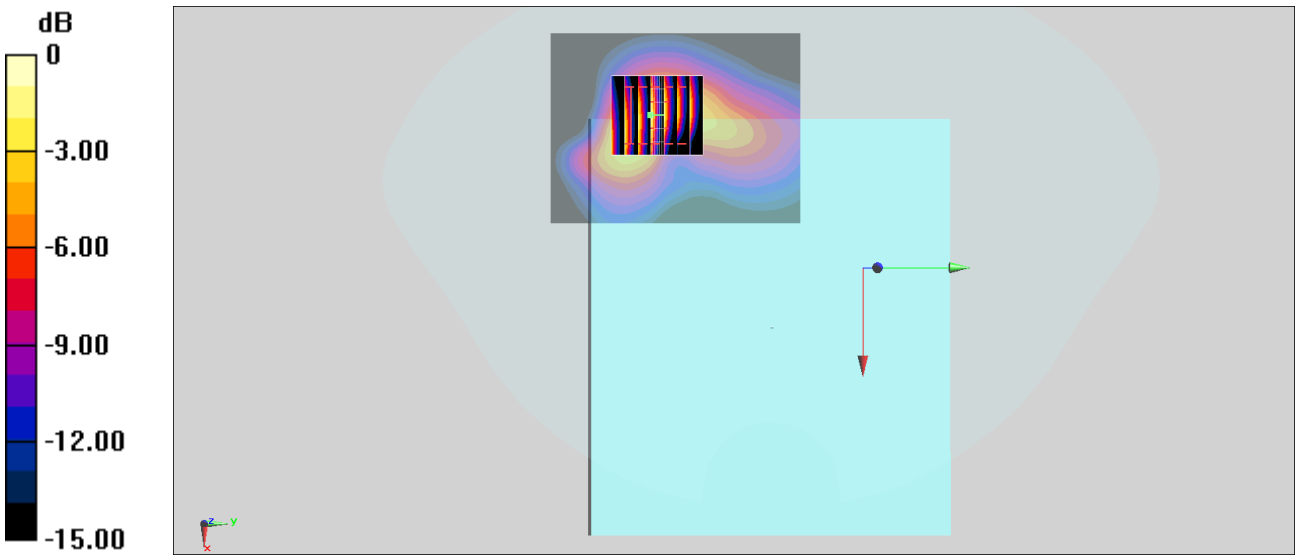

0 dB = 1.47 W/kg = 1.67 dBW/kg

#91_LTE Band 48 Ant 2_20M_QPSK_1_0_Back_10mm_Ch55340

Communication System: LTE; Frequency: 3560 MHz;Duty Cycle: 1:1.59
Medium: HSL_3300~4200_230121 Medium parameters used: f = 3560 MHz; σ = 2.992 S/m; ε_r = 37.966; ρ = 1000 kg/m^3
Ambient Temperature：23.3 ℃; Liquid Temperature：22.3 ℃

DASY5 Configuration
- Probe: EX3DV4 - SN3925; ConvF(7.22, 7.22, 7.22) @ 3560 MHz; Calibrated: 2022/4/29
- Sensor-Surface: 1.4mm (Mechanical Surface Detection)
- Electronics: DAE4 Sn778; Calibrated: 2022/5/30
- Phantom: SAM_Left; Type: QD000P40CD; Serial: 1719
- Measurement SW: DASY52, Version 52.10 (4); SEMCAD X Version 14.6.14 (7483)

Area Scan (91x71x1): Interpolated grid: dx=1.200 mm, dy=1.200 mm
Maximum value of SAR (interpolated) = 0.941 W/kg

Zoom Scan (7x7x8)/Cube 0: Measurement grid: dx=5mm, dy=5mm, dz=1.4mm
Reference Value = 17.75 V/m; Power Drift = 0.15 dB
Peak SAR (extrapolated) = 1.25 W/kg
SAR(1 g) = 0.539 W/kg; SAR(10 g) = 0.240 W/kg
Smallest distance from peaks to all points 3 dB below = 8.1 mm
Ratio of SAR at M2 to SAR at M1 = 78.3%
Maximum value of SAR (measured) = 0.961 W/kg

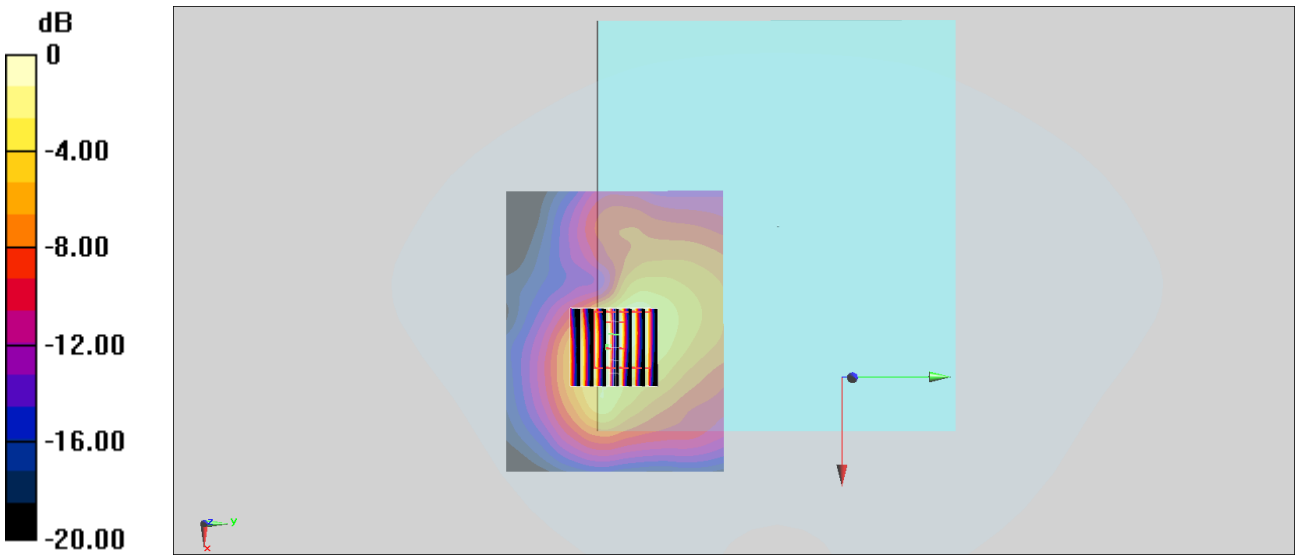

0 dB = 0.961 W/kg = -0.17 dBW/kg

#92_FR1 n2 Ant 1_20M_BPSK_1_53_Back_10mm_Ch372000

Communication System: FR1; Frequency: 1860 MHz;Duty Cycle: 1:1
Medium: HSL_1900_230115 Medium parameters used: f = 1860 MHz; σ = 1.366 S/m; ε_r = 39.738; ρ = 1000 kg/m^3
Ambient Temperature：23.2 ℃; Liquid Temperature：22.2 ℃

DASY5 Configuration
- Probe: EX3DV4 - SN3925; ConvF(8.7, 8.7, 8.7) @ 1860 MHz; Calibrated: 2022/4/29
- Sensor-Surface: 1.4mm (Mechanical Surface Detection)
- Electronics: DAE4 Sn778; Calibrated: 2022/5/30
- Phantom: SAM_Left; Type: QD000P40CD; Serial: 1719
- Measurement SW: DASY52, Version 52.10 (4); SEMCAD X Version 14.6.14 (7483)

Area Scan (61x61x1): Interpolated grid: dx=1.500 mm, dy=1.500 mm
Maximum value of SAR (interpolated) = 1.17 W/kg

Zoom Scan (5x5x7)/Cube 0: Measurement grid: dx=8mm, dy=8mm, dz=5mm
Reference Value = 28.85 V/m; Power Drift = 0.11 dB
Peak SAR (extrapolated) = 1.52 W/kg
SAR(1 g) = 0.828 W/kg; SAR(10 g) = 0.405 W/kg
Smallest distance from peaks to all points 3 dB below = 7.2 mm
Ratio of SAR at M2 to SAR at M1 = 55.1%
Maximum value of SAR (measured) = 1.23 W/kg

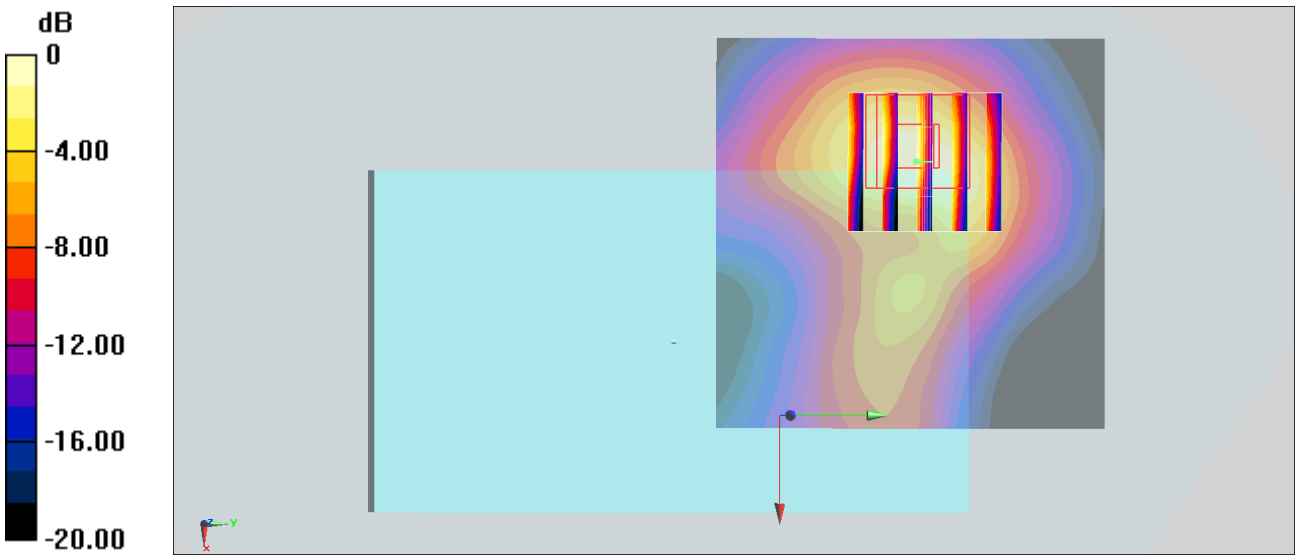

0 dB = 1.23 W/kg = 0.90 dBW/kg