FCC Part 96.47 TEST REPORT

FCC ID	:	**A4RGPQQ7**
Equipment	:	**Phone**
Model Name	:	**GPQQ7**
Applicant	:	**Google LLC** **1600 Amphitheatre Parkway,** **Mountain View, CA, 94043 USA**
Standard	:	**FCC Part 96.47**
RF Interface	:	**NR n48**

The product was received on Feb. 24. 2026, and testing was performed from Feb. 26, 2026 to Feb. 26, 2026. We, Sporton International Inc. EMC & Wireless Communications Laboratory, would like to declare that the tested sample has been evaluated in accordance with the test procedures and has been in compliance with the applicable technical standards.

The test results in this report apply exclusively to the tested model / sample. Without written approval of Sporton International Inc. EMC & Wireless Communications Laboratory, the test report shall not be reproduced except in full.

Approved by: Jones Tsai

Sporton International Inc. EMC & Wireless Communications Laboratory
No. 52, Huaya 1st Rd., Guishan Dist., Taoyuan City 333, Taiwan (R.O.C.)

Table of Contents

History of this test report **3**
Summary of Test Result **4**
1 General Description **5**
1.1 Product Feature of Equipment Under Test 5
1.2 Modification of EUT 5
1.3 Testing Laboratory 5
1.4 Applicable Standards 6
2 Test Configuration of Equipment Under Test **7**
2.1 Connection Diagram of Test System 7
3 End User Device additional requirement **8**
3.1 Test Requirement 8
3.2 Test Procedure 8
3.3 Test Result 9
4 Measuring Equipment List **11**
Appendix A. Setup Photographs

History of this test report

Report No.	Version	Description	Issue Date
FG5N0809-01G	01	Initial issue of report	Mar. 06, 2026

Summary of Test Result

Report Clause	Ref Std. Clause	Test Items	Result (PASS/FAIL)	Remark
3	96.47	End User Device additional requirement	Pass	-

Conformity Assessment Condition:
The test results (PASS/FAIL) with all measurement uncertainty excluded are presented against the regulation limits or in accordance with the requirements stipulated by the applicant/manufacturer who shall bear all the risks of non-compliance that may potentially occur if measurement uncertainty is taken into account.
Comments and Explanations:
The product specifications of the EUT presented in the test report that may affect the test assessments are declared by the manufacturer who shall take full responsibility for the authenticity.

Reviewed by: William Chen

Report Producer: Freda Wu

1 General Description

1.1 Product Feature of Equipment Under Test

Product Feature
General Specs GSM/WCDMA/LTE/5G NR/NTN, Bluetooth, BLE, BLE channel sounding, Thread, Wi-Fi 2.4GHz 802.11b/g/n/ac/ax/be, Wi-Fi 5GHz 802.11a/n/ac/ax/be, Wi-Fi 6GHz 802.11a/ax/be, NFC, WPC Rx, UWB and GNSS Rx. **Antenna Type** <Ant. 1>: ILA Antenna <Ant. 5>: IFA Antenna <Ant. 6>: IFA Antenna <Ant. 7>: IFA Antenna

Remark: The above EUT's information was declared by manufacturer. Please refer to Disclaimer in report summary.

EUT Information List	
S/N	**Performed Test Item**
61031FDKY0000E	Conducted Measurement

1.2 Modification of EUT

No modifications are made to the EUT during the entire test sessions.

1.3 Testing Laboratory

Test Site	Sporton International Inc. EMC & Wireless Communications Laboratory
Test Site Location	No. 52, Huaya 1st Rd., Guishan Dist., Taoyuan City 333, Taiwan (R.O.C.) TEL: +886-3-327-3456 FAX: +886-3-328-4978
Test Site No.	**Sporton Site No.**
	TH03-HY
Test Engineer	Alston Tsai
Temperature	21 ~ 25 ℃
Relative Humidity	43 ~ 48 %

FCC designation No.: TW1190

1.4 Applicable Standards

- FCC Part 96.47
- FCC KDB 940660 D01 Part 96 CBRS Eqpt v0301
- WINNF-TS-0122-V1.0.2 CBRS CBSD Test Specification

Remark:

1. All test items were verified and recorded according to the standards and without any deviation during the test.

2. The TAF code is not including all the FCC KDB listed without accreditation.

2 Test Configuration of Equipment Under Test

2.1 Connection Diagram of Test System

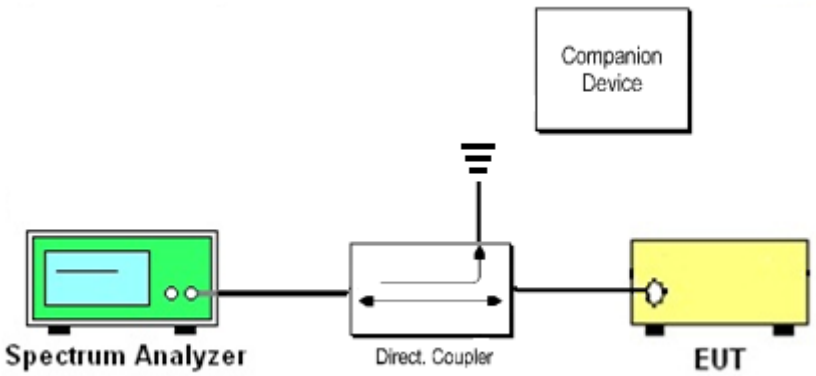

The companion device is a certified NR CBSD (FCC ID: WBKRU4370)

3 End User Device additional requirement

3.1 Test Requirement

FCC Part 96.47

(a) End User Devices may operate only if they can positively receive and decode an authorization signal transmitted by a CBSD, including the frequencies and power limits for their operation.

(1) An End User Device must discontinue operations, change frequencies, or change its operational power level within 10 seconds of receiving instructions from its associated CBSD.

3.2 Test Procedure

The following procedure is following in accordance with WINNF-TS-0122-V1.0.2 CBRS CBSD Test Specification, using the certified NR CBSD (FCC ID: WBKRU4370) as companion device to present compliance with Part 96.47 requirement for End User Device (EUD):

1. Configure SAS granted CBSD to operate at frequency 3560-3600 MHz and power level 20 dBm/MHz
2. Enable CBSD service
3. Check EUD Tx Frequency and power
4. Disable CBSD service
    a. Check if EUD stops transmission within 10 seconds.

5. Configure SAS granted CBSD to operate at frequency 3650-3690 MHz and power level 30 dBm/MHz
6. Enable CBSD service
7. Check EUD Tx Frequency and power
8. Disable CBSD service
    a. Check if EUD stops transmission within 10 seconds.

3.3 Test Result

[Step 1] Configure SAS granted CBSD to operate at frequency 3560-3600 MHz and power level 20 dBm/MHz
[Step 3] Check EUD Tx Frequency and power

04:43:56 PM 02/26/2026

[Step 4.a.] EUD stops transmission within 10 seconds right after receiving instructions from its associated CBSD.

04:45:42 PM 02/26/2026

[Step 5] Configure SAS granted CBSD to operate at frequency 3650-3690 MHz & power level 30 dBm/MHz

[Step 7] Check EUD Tx Frequency and power

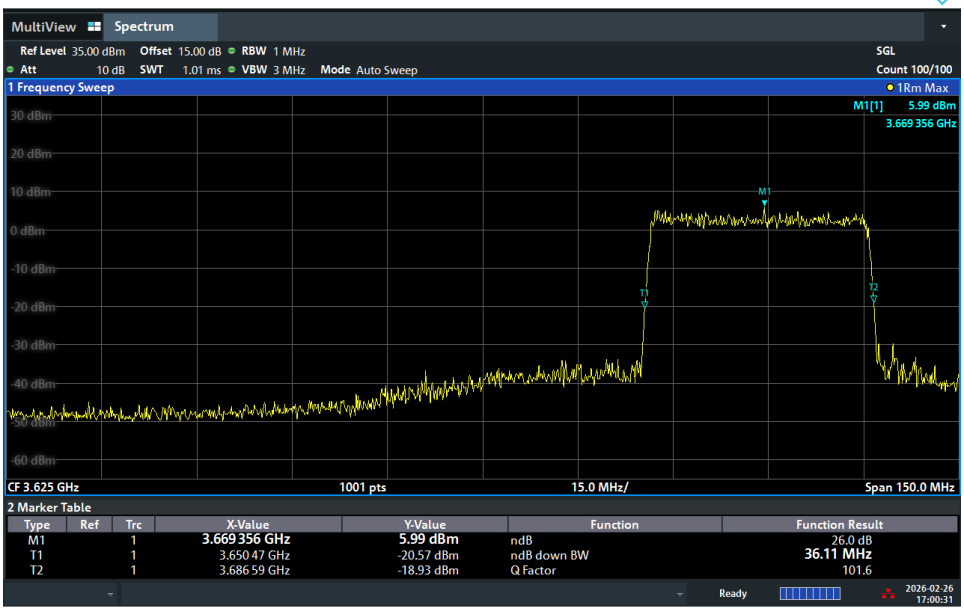

05:00:32 PM 02/26/2026

[Step 8.a.] After changing the frequency and power level,

The EUD discontinues operating, changes frequencies, or changes its operational power level within 10 seconds right after receiving instructions from its associated CBSD. Test result is a PASS.

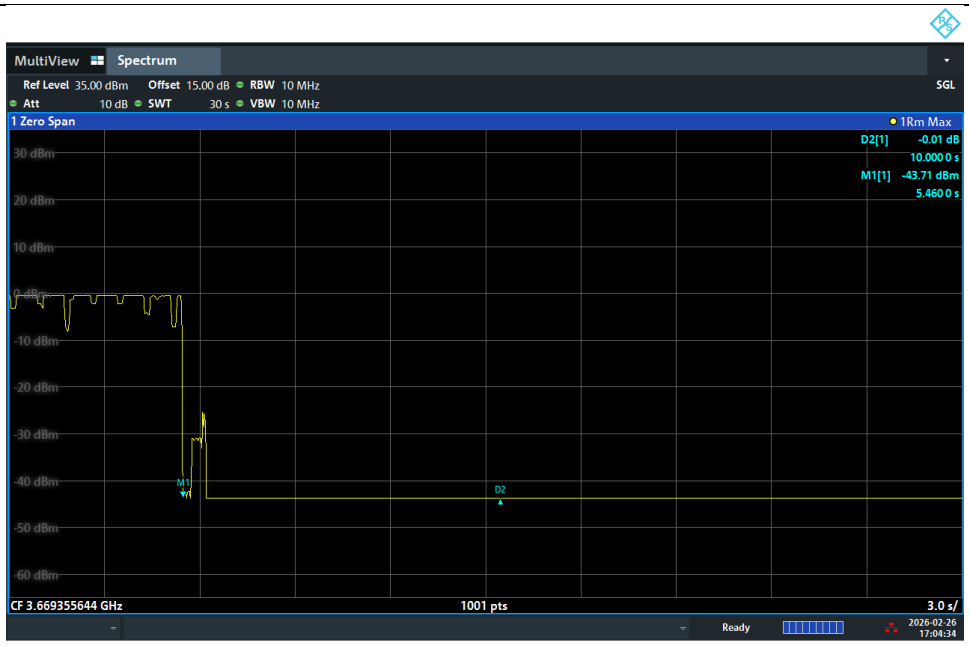

05:04:34 PM 02/26/2026

4 Measuring Equipment List

Instrument	Brand Name	Type / Model No.	Serial No.	Characteristics	Calibration Date	Test Date	Due Date	Remark
Spectrum Analyzer	R&S	FSV3013	101549	10MHz-13.6GHz	Dec. 18, 2025	Feb. 26, 2026	Dec. 17, 2026	Conducted (TH03-HY)
CBSD Base Station	BTI	RU4370	B23000022S	FCC ID: WBKRU4370	N/A	N/A	N/A	Conducted (TH03-HY)
SAS Test harness	WInnForum	1.0.0.3	N/A	N/A	N/A	N/A	N/A	Conducted (TH03-HY)

————THE END————